Matters Arising:

Glycerol as the actuator of integral feedback control in yeast osmotic stress signaling

Suzannah Rutherford
Division of Basic Sciences, Fred Hutchinson Cancer Research Center, Seattle, WA 98109-1024 USA

Abstract

Oudenaarden and colleagues employ elegant experiments and control theory to model perfect adaptation of the yeast osmotic stress response - the precise return of turgor pressure to its optimal, steady-state value despite variation in system parameters and the continued presence of osmotic stress. Their data convincingly show that nuclear signaling and cell volume undergo "robust perfect adaptation" implying that integral feedback must restore their steady state values. However they incorrectly map the integrator onto a minimal network that violates assumptions implicit in conventional block diagrams. Using known features of osmotic stress signaling and results presented by the authors, I argue that glycerol concentration – the integral of the rate of glycerol accumulation (synthesis versus leakage) – transforms metabolic energy into increased osmolarity that drives water influx and restoration of turgor pressure. Integral feedback control actuated through glycerol synthesis is logically positioned to provide perfect adaptation and robustness in hyperosmotic stress responses.

Introduction

Robust perfect adaptation is a property of biological feedback control systems that precisely maintain steady-state homeostasis of vital functions in the continued presence of disturbances such as environmental stress or, in the case of desensitization, increase the dynamic range of detection for external signals such as pheromones or environmental nutrients (Yi et al., 2000). In their article "A systems level analysis of perfect adaptation in yeast osmoregulation" Muzzey et al. beautifully demonstrate perfect adaptation of nuclear signaling, cell volume, and thus membrane turgor pressure in osmotic stress. Control theory shows that perfect adaptation predicts and is predicted by integral feedback control (Yi et al., 2000). They argue convincingly and with clever experiments that the data support a single integrating mechanism (or integrators acting in parallel, but not in series). The authors use this point to identify on a minimal network model the location of the integral feedback control mechanism(s).

Analyses of complex control systems depend critically on an accurate working model with clearly defined topology (Riggs, 1970; Romagnoli and Palazoglu, 2006). Here I show that the minimal representation of the osmotic stress response presented in Muzzey et al. is incorrect because it violates assumptions implicit in conventional block diagrams (page 115 (Riggs, 1970)). Using known features of osmotic stress signaling and results presented by the authors, I argue that integration of the summed rates of glycerol synthesis and leakage (amount per time) into an accumulating intracellular concentration of glycerol (amount per volume) provides integral feedback control, perfect adaptation, and robustness to the hyperosmotic stress response. In contrast with the integrator proposed by the authors, glycerol concentration directly drives water flux, osmolarity, and restoration of turgor pressure.

Results

Figure 1 shows a detailed block diagram representation of feedback control based on features of the osmotic stress response reported by Muzzey et al. using as a general template the feedback control system presented in Figure 10.4 of Romagnoli and Palazoglu (Romagnoli and Palazoglu, 2006). In this representation each block depicts a complete, unidirectional subsystem whose output variables are uniquely and completely determined by their input variables (Riggs, 1970).

It has been well documented that the primary function of the osmotic stress response is to restore turgor pressure through increased synthesis and accumulation of glycerol (Hohmann, 2002). In contrast to the minimal representation, I start with measurement of turgor pressure, which is the controlled variable (y). Turgor pressure is transduced into biologically meaningful signals through the measuring functions (g_m^i) performed by activating conformational changes in the osmosensor proteins Sho1 and Sln1, which initiate the high osmolarity glycerol (HOG) pathway, in the osmosensitive glycerol channel Fps1, which closes in response to increases in osmolarity, and in inactivating conformational changes in other proteins that may respond to directly or indirectly to reduced turgor pressure or downstream changes (e.g. cytoplasmic crowding (Miermont et al., 2013)).

For simplicity, I assume that the steady-state activities of the sensor proteins (plausibly their relaxed conformations) are zero when turgor pressure is at its optimal value, however this is not essential. If steady-state activities are 0, the cellular measurements of turgor pressure (y_m) are equivalent to their deviations from steady-state (errors; e^i) for all sensors. Following standard convention, these errors are fed into the controller (grey block) through the detailed input-output functions shown. The output of the glycerol synthetic machinery in the controller is the controlled variable (c), the rate

of glycerol accumulation. The rate of glycerol accumulation is the summation of the rate of synthesis, provided through regulation of the pathway at several levels, and the opposing rate of glycerol leakage, through the Fps1 channel (Remize et al., 2001). The intracellular concentration of glycerol is the manipulated variable (m).

Mapping the minimal model of Muzzey et al. (Figure 2A) onto the detailed representation in Figure 1 shows how their subsystems H and I are not legitimate single-input single-output transfer functions, where the subsystems overlap, and how there is therefore no way to make the minimal model isomorphic with the known details of the osmotic stress response (Figure 2B). The minimal model consistent with the detailed block diagram of the response is given in Figure 2C. Furthermore, by definition, concentration (cumulative amount per volume) is proportional to the integral of the rate of glycerol accumulation (amount per time), making glycerol the integrator. This must be the sole locus of integration as Muzzey et al. show experimentally that the osmotic stress response circuit in yeast contains exactly one integrator, acting in series (or possibly several in parallel).

If the cellular rates of glycerol synthesis and leakage are integrated through accumulating intracellular concentration of glycerol and thus osmolarity, then at steady-state the concentration of glycerol is by definition constant. If the concentration of glycerol is constant, then net glycerol accumulation must be zero, and the rate of glycerol leakage must be equal to its rate of synthesis (Muzzey et al., 2009). As shown by Muzzey et al., similar logic applies to all upstream components; if the integrator is the most downstream element in the network (relative to the input of a disturbance in external osmolarity), all error deviations, Hog1 nuclear enrichment, and steady-state viability are expected to display perfect adaptation (Muzzey et al., 2009). Indeed, we observed perfect adaptation of viability before and after adaptation to an osmotic challenge (correlation between early mortality and recovery of viability over 0.98; Hirate et al., in preparation). Given enough time (depending on the time constants of each response) cells adapt to the hyperosmolar media with increased intracellular glycerol concentrations. Once adaptation has occurred and turgor pressure is restored, sensors relax and all deviations from steady state activity return to zero.

Discussion

The molecular mechanisms behind error sensing have been a source of mystery to bioengineers (e.g. “the molecular mechanisms behind error sensing are little understood” (Xiao et al., 2009)). However, from the perspective of protein stability and homeostasis, protein conformational shifts between relaxed and activated states are an obvious possibility (Rutherford and Zuker, 1994). Protein conformational shifts, from a relaxed

state to distortions caused by less than optimal turgor pressure are thought to activate the high osmolarity glycerol (HOG) pathway in osmotic stress (Hohmann et al., 2007). In further support of the model presented in Figure 1, similar activation or loss of activity of cytosolic proteins can be imagined under the conditions of molecular crowding that occur in hyperosmotic stress (Miermont et al., 2013). In that case, restoration of cell volume and turgor pressure plausibly return proteins exactly to their pre-stress steady conformations and levels of activity. Finally, it is clear that the intracellular concentration of any biomolecule is the integral of its positive rate of accumulation. Concentration can thus be a general source of integral feedback and an actuator of any concentration-dependent process, converting the energy of cellular metabolism into the energy inherent in concentration gradients and other concentration dependent processes.

In addition to revealing potentially general features of integral feedback control in biology, the block diagrams in Figures 1 and 2c show how the osmotic stress response may work over different time scales and levels of stress. Upon a shift to hyperosmotic media, the initial response is the rapid closure of constitutive leakage channel Fps1, closing the smallest negative feedback loop in Figure 1 and effectively removing the negative input to the controller in the circuit shown in Figure 2c. Figure 1 also shows clearly and intuitively how the successive activation of sensors with longer time scales and additional sources of negative feedback on glycerol accumulation could occur, consistent with the observed longer delays and increasingly stronger adaptive responses proportional to the degree of osmotic stress (Hohmann et al., 2007).

Figure Legends

Figure 1. The yeast osmotic stress response as an error actuated linear control system. At steady-state (time 0^-), turgor pressure (y) is at its normal, steady-state value and osmostress sensitive proteins (sensors 1-5) are in their relaxed, non-induced conformations, with all error deviations (e) equal to 0. An abrupt step in external osmolarity (d) transiently alters turgor pressure, the controlled variable (y). The change in turgor pressure (de)activates sensor proteins that transduce the signal to downstream components. The canonical osmotic stress response pathway is the high osmolarity glycerol (HOG) MAP kinase cascade (H; purple) activated by sensors Sln-1 and Sho-1 (Hohmann et al., 2007). Dual phosphorylation of the downstream MAP kinase Hog1 in the cytoplasm activates the glycerol synthetic pathway (G; orange) and is translocated to the nucleus (D; blue; nuclear Hog1 dependent functions), where it controls transcription and synthesis of GPD-1, the rate limiting enzyme in glycerol synthesis(Remize et al.,

2001). Nuclear Hog-1 independent activities (I; green) also increase glycerol synthesis and retention. Upon activation by osmotic stress the Fps-1 glycerol channel, normally open, closes. The osmosensitive kinase Ypk1 responds to osmotic stress by increasing the activity of GPD1 (Lee et al., 2012), and the function of proteins that are sensitive to osmotic stress and/or cytoplasmic crowding is impaired. The loss of activity of proteins that serve essential functions plausibly cause reduced fitness and viability and activate general stress responses including the general stress response transcription factor Msn-2 whose target is (among others) GPD1 (Gasch et al., 2000). Processes 1-5 are initiated at successively higher levels of osmotic stress and act on successively longer timescales. For example, less severe osmotic stress has a very short response time and may not activate Sho-1 (e4) or damage cellular proteins (e5). Linear relationships between Laplace transformed of inputs and outputs of the transfer functions are assumed (Riggs, 1970; Romagnoli and Palazoglu, 2006).

Figure 2. Minimal model violates single-input single-output (SISO) assumptions of conventional block diagrams. A. The minimal circuit model of Muzzey et. al. with 4 blocks identified as 1) the H subsystem that contains the MAP kinase cascade and "links an osmotic disturbance at the membrane with Hog1 nuclear enrichment", 2) the D subsystem that contains "Hog1 dependent mechanisms that promote glycerol accumulation including the transcriptional activation of genes encoding glycerol producing enzymes and interactions initiated by Hog1 in the cytoplasm or nucleus that lead to increased glycerol synthesis", 3) the I subsystem that contains "Hog-independent mechanisms that contribute to osmolyte production" and 4) the G subsystem representing "metabolic reactions involved in glycerol synthesis and any other reactions that contribute to glycerol accumulation" (Muzzey et al., 2009). A mathematical implementation of the model shows how turgor pressure can return to pre-stimulus values even in the continued presence of osmotic stress (Muzzey et al., 2009) but does not prove that the model correctly reflects the biology. **B.** A revised block diagram showing in grey additional links indicated in the text of Muzzey et al. but not shown in their model that violate SISO assumptions. For example, subsystem H has one input (turgor pressure) but 2 outputs (activated Hog1 in the nucleus which increases transcription of GPD1 (blue in Figure 1) and activated cytoplasmic Hog1, which is believed to act through Pfk2c in combination with other outputs to increase glycerol pathway activity (orange in Figure 1)). (Indeed the revised circuit must include 2 additional summation points not in the original model.) Subsystem I, nuclear Hog1-independent functions has three independent outputs: 1) the general stress response

inducing Msn2/4, which further activates GPD1 transcription (Boy-Marcotte et al., 1998; Gasch et al., 2000)(ref), 2) the Fps1 leakage channel closing counteracts glycerol synthesis(Hohmann, 2002), and 3) increased Gpd1 activity through nuclear Hog1-independent mechanisms is summed with Hog1-dependent increases in Gpd1 synthesis to promote glycerol pathway activation (e.g. Ypk1 (Lee et al., 2012), Pfk26 (Dihazi et al., 2004) and as reviewed by (Hohmann, 2002; Hohmann et al., 2007; Saito and Posas, 2012)). **C.** Minimal model that is topologically equivalent to the model in Figure 1. Model includes a single controller (grey) with input turgor pressure and output glycerol accumulation, a single integrating mechanisms converting summed rates of glycerol synthesis and loss to intracellular glycerol concentrations and two (groups of) sensors. The positive (sensors 2–5) and negative (sensor 1) mechanisms promote glycerol synthesis or leakage. For comparison, the locations of the four subsystems depicted in Figure 2A are shown.

References

Boy-Marcotte, E., Perrot, M., Bussereau, F., Boucherie, H., and Jacquet, M. (1998). Msn2p and Msn4p control a large number of genes induced at the diauxic transition which are repressed by cyclic AMP in Saccharomyces cerevisiae. J. Bacteriol. *180*, 1044–1052.

Dihazi, H., Kessler, R., and Eschrich, K. (2004). High osmolarity glycerol (HOG) pathway-induced phosphorylation and activation of 6-phosphofructo-2-kinase are essential for glycerol accumulation and yeast cell proliferation under hyperosmotic stress. J. Biol. Chem. *279*, 23961–23968.

Gasch, a P., Spellman, P.T., Kao, C.M., Carmel-Harel, O., Eisen, M.B., Storz, G., Botstein, D., and Brown, P.O. (2000). Genomic expression programs in the response of yeast cells to environmental changes. Mol. Biol. Cell *11*, 4241–4257.

Hohmann, S. (2002). Osmotic Stress Signaling and Osmoadaptation in Yeasts. Microbiol. Mol. Biol. Rev. *66*, 300–372.

Hohmann, S., Krantz, M., and Nordlander, B. (2007). Yeast Osmoregulation (Elsevier Masson SAS).

Lee, Y.J., Jeschke, G.R., Roelants, F.M., Thorner, J., and Turk, B.E. (2012). Reciprocal Phosphorylation of Yeast Glycerol-3-Phosphate Dehydrogenases in Adaptation to Distinct Types of Stress. Mol. Cell. Biol. *32*, 4705–4717.

Miermont, A., Waharte, F., Hu, S., McClean, M.N., Bottani, S., Léon, S., and Hersen, P. (2013). Severe osmotic compression triggers a slowdown of intracellular signaling, which can be explained by molecular crowding. Proc. Natl. Acad. Sci. U. S. A. *110*, 5725–5730.

Muzzey, D., Gómez-Uribe, C. a., Mettetal, J.T., and van Oudenaarden, A. (2009). A Systems-Level Analysis of Perfect Adaptation in Yeast Osmoregulation. Cell *138*, 160–171.

Remize, F., Barnavon, L., and Dequin, S. (2001). Glycerol export and glycerol-3-phosphate dehydrogenase, but not glycerol phosphatase, are rate limiting for glycerol production in Saccharomyces cerevisiae. Metab. Eng. *3*, 301–312.

Riggs, D.S. (1970). Control Theory and Physiological Feedback Mechanisms (Baltimore: The Williams and Wilkins Co.).

Romagnoli, J.A., and Palazoglu, A. (2006). Introduction to Process Control (Taylor & Francis Group, CRC Press).

Rutherford, S., and Zuker, C. (1994). Protein folding and the regulation of signaling pathways. Cell *79*.

Saito, H., and Posas, F. (2012). Response to hyperosmotic stress. Genetics *192*, 289–318.

Xiao, Y.N., Drengstig, T., and Ruoff, P. (2009). The control of the controller: Molecular mechanisms for robust perfect adaptation and temperature compensation. Biophys. J. *97*, 1244–1253.
Yi, T.M., Huang, Y., Simon, M.I., and Doyle, J. (2000). Robust perfect adaptation in bacterial chemotaxis through integral feedback control. Proc. Natl. Acad. Sci. U. S. A. *97*, 4649–4653.

Rutherford
Figure 1

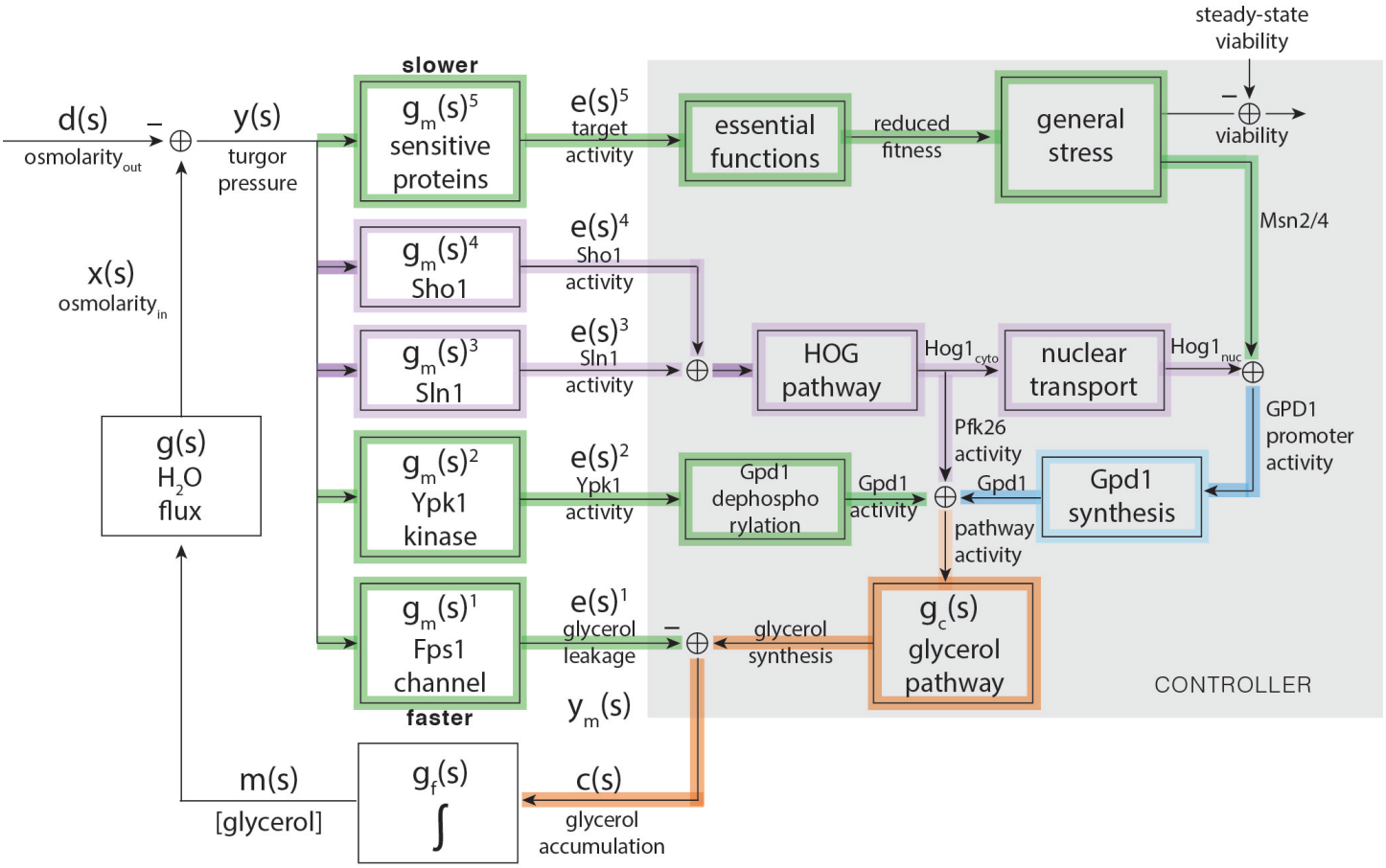
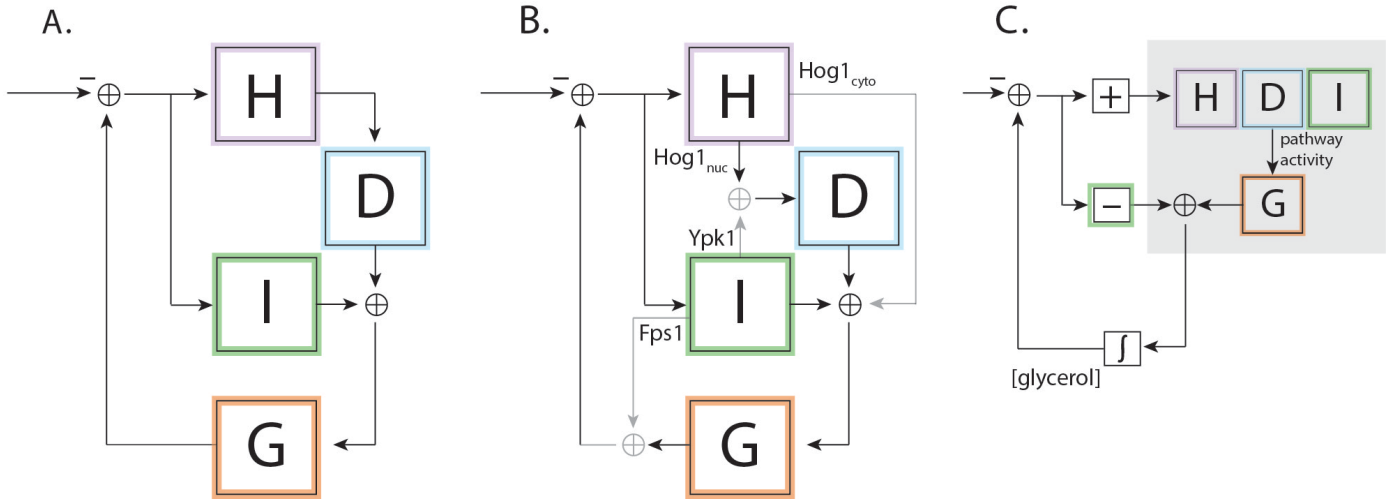
Figure 2