Using qualitative models to define sustainable management for the commons in data poor conditions.

Authors: Francesca Mancini[a], George M. Coghill[b], David Lusseau[a]

[a]Institute of Biological and Environmental Sciences, University of Aberdeen, Zoology Building, Tillydrone Avenue, Aberdeen AB24 2TZ, UK..

[b]Department of Computing Science, University of Aberdeen, Meston Building, Meston Walk, Aberdeen AB24 3UE, UK.

Corresponding author: Francesca Mancini

Room 418, Zoology Building, Tillydrone Avenue, Aberdeen AB24 2TZ, UK. Telephone: 01224 274106. Email: r03fm14@abdn.ac.uk

Abstract

Nearly 50 years after Hardin's "tragedy of the commons", we have not yet found an analytical solution to the issue of governing common-pool resources (CPR). We often have a good understanding of the qualitative relationships between the principal actors in socioecological systems (SESs), but classical quantitative approaches require a tremendous amount of data to understand the drivers of SESs sustainability. Here we show that qualitative modelling approaches can provide important governance insights for SESs that are understood but not quantified.

We used Loop Analysis to test the outcomes of different management regimes on a simple nature-based tourism SES described by economic, social and environmental variables. We tested the sustainability of different management scenarios on this system and we identified the necessary conditions to achieve it. Here, sustainability is defined as the presence of a stable equilibrium and the maintenance of economic profitability of the industry, environmental quality and social justice (triple bottom line- TBL- sustainability).

We found that hybrid management strategies have higher potential for sustainable development than exclusively market-based or centralised governance structures. Management regimes where property rights and responsibilities are shared between different stakeholders are more likely to be successful. However, the system is generally highly unstable and it is important to tune each strategy to each particular situation. The conditions for sustainability found across the different systems tested were: a low reinvestment rate of tourist revenues into new infrastructures and a low growth rate of the environment. Management strategies based on maximum sustainable yield, which keep the environment far from its carrying capacity, have less chance to be sustainable.

Qualitative models of SESs are powerful diagnostic tools; they can help identifying variables that play an important role in determining socioecological sustainability in data-poor circumstances and guide the design of efficient data collection programmes. Our results highlight the importance of careful planning when designing management strategies for nature-based tourism. The application of one-size-fits-all solutions to every situation is likely to lead to the failure of the commons; however tourism-based SESs can be sustainable if management strategies are tuned to each particular case.

Keywords: common-pool resources, loop analysis, nature-based tourism, press-pulse dynamics, socioecological sustainability, sustainable development.

1. Introduction

Natural resources are usually considered public goods. However, they can become common pool resources (CPRs) when overexploitation leads to degradation and when it is impossible or difficult to exclude some individuals from using the resource (Ostrom et al., 1999). There are two main approaches to dealing with the "commons dilemma". The "panacea" approach applies simplified and general models to all situations. Advocates of this approach propose one particular governance structure as the only possible solution to the tragedy of the commons (Hardin, 1968). The other approach consists in deriving from empirical case studies the characteristics that guarantee sustainable governance (Ostrom, 1990). The first approach does not recognise the importance of the particular circumstances that characterise each different situation (Ostrom et al., 2007), while the second has to deal with all the issues associated with obtaining observations and data from these complex socioecological systems (SESs)(Hilborn and Ludwig, 1993). As a result, attempts to manage CPRs have often failed (Acheson, 2006).

Commons are SESs, which are composed of different, relatively separable, subsystems that interact in a complex and, sometimes, unknown way (Ostrom, 2009). The inherent complexity of SESs requires an integrated approach to predict the outcomes of management strategies (Ostrom, 2007). However, we do not yet have analytical tools to accurately predict these outcomes in data-poor circumstances. These systems are difficult to study empirically, because the scope for experimental work is limited and replication, control and randomisation are difficult to achieve (Hilborn and Ludwig, 1993). Therefore, a simulation approach could offer insights on the outcomes of different management regimes. However, little is known about the relationships between the ecological and socio-economic components of these systems and, often, we cannot quantify important variables in the model.

Qualitative approaches have proven advantageous to model complex systems in data-poor circumstances (Puccia and Levins, 1985). Qualitative models sacrifice the precision of quantitative predictions and focus on the generality and realism of the qualitative relationships between model variables (Levins, 1974). Although we cannot measure some variables, we can still include them in the model as long as we are able to determine the direction of the effect of one variable on the other. Qualitative models can show which variables and relationships in the system are crucial for system stability and to obtain favourable predictions, thus helping to prioritise management strategies.

Recreation is one of the cultural ecosystem services that the environment provides. Tourism is often a primary income for local communities, it can dominate national economies and play a key role in nations' macroeconomics (O'Connor et al., 2009). While nature-based tourism has been welcomed by conservation and environmental organisations as an eco-friendly alternative to other consumptive activities, such as hunting and fishing (Tisdell and Wilson, 2002), there is growing evidence that nature-based tourism, if not managed properly, can have negative effects on the environment (De'ath et al., 2012; Meletis and Campbell, 2007; Pirotta and Lusseau, 2015). Therefore, the issue of managing nature-based tourism becomes a CPR issue.

In this study, we tested the sustainability of management regimes on qualitative representations of nature-based tourism SESs using Loop Analysis (Puccia and Levins, 1985). SESs are subjected to press-pulse dynamics (Collins et al., 2011) and in order to understand what drives their sustainability we need to investigate their responses to both press and pulse perturbations. Pulse perturbations are sudden events such as droughts or fire, while press perturbations are sustained and slow, such as climate change or economic growth. We define sustainability in terms of responses of the SES to pulse and press perturbations. For each

different management strategy applied to a simple nature-based tourism system we asked three questions: Does the system's equilibrium lose stability after a pulse perturbation? Under which conditions could the system remain stable? How does the system behave after a press perturbation? In order to answer the first question, we conducted a stability analysis of the qualitative systems. Secondly, we identified the necessary conditions for stability by conducting a sensitivity analysis of the stability criteria. In order to answer the third question, we obtained tables of predictions for the responses of the systems to press perturbations. If an increase (a positive press perturbation) in one component of the system causes the other components to increase (a positive response), then the SES can maintain economic profitability, social justice and environmental quality, in other words, triple bottom line (TBL) sustainability (Elkington, 1998).

2. Materials and Methods

Here we briefly describe the theory of Loop Analysis, for detail see (Puccia and Levins, 1985). Model construction can start with a simple pictorial form, the signed digraph (Fig.1). The nodes represent the variables in the system. The links connecting the nodes represent the qualitative relationships between the variables. Positive relationships (an increase in the first variable produces an increase in the abundance of the second variable) are represented by links with an arrow-end, while the links with a circle-end represent negative relationships. Links that start and end on the same variable are called self-effects, and they represent self-regulation (e.g. density dependence) or reliance on factors external to the modelled system. A path is defined as a series of links starting at one variable and ending on another without crossing any variables twice and a path that starts and ends at the same variable is called a loop. Loops in the same system are defined as either conjunct or disjunct: two conjunct loops have at least one variable in common, while two disjunct loops have no variables in common.

Fig. 1. Signed digraph of all the scenarios tested. The nodes represent the variables in the model. T: tourists; C: capital; E: environment; S: state intervention; U: users; A: external agency. The links connecting the nodes represent the relationships between the variables: arrow-ended links indicate positive relationships, circle-ended links represent negative relationships. The links starting and terminating on the same variable represent self-effects. a) Signed digraph of the open access scenario and its matrix representation. Each entry in the matrix corresponds to a link in the graph. b) State ownership scenarios. The pink, blue and yellow links represent the three alternative scenarios, respectively, subsidies, licencing and access fee. c) User group ownership scenarios. In the first scenario (in black) the users implement a system of individual transferable quotas, in the second one users are also involved in monitoring and managing environmental quality (green links). d) Hybrid scenarios. In the first scenario the government intervenes to monitor and manage environmental quality (in orange), in the second one users invest in an external agency to monitor and manage environmental quality (in green). For detailed description of the models see text.

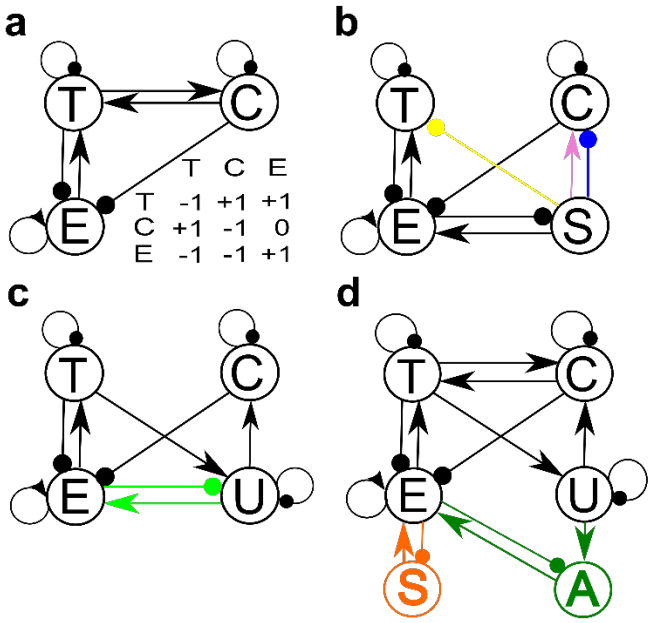

The qualitative relationships represented in the graph can be entered into a matrix:

$$A = \begin{bmatrix} a_{11} & \cdots & a_{1n} \\ \vdots & \ddots & \vdots \\ a_{n1} & \cdots & a_{nn} \end{bmatrix} \tag{1}$$

where element a_{ij} represents the effect of variable *j* on variable *i*. The matrix represents qualitative relationships (negative, positive or 0), without specifying the magnitude of the effects.

We can now analyse system stability in terms of the feedbacks at each level of the system. A system has as many feedback levels as variables in the system and feedback at each level *k* is calculated using the following equation:

$$\mathrm{F_k} = \sum_{\mathrm{m=1}}^{\mathrm{k}} (-1)^{\mathrm{m+1}} \mathrm{L(m,k)}, \tag{2}$$

where *L(m, k)* means *m* disjunct loops with *k* elements. So feedback at level *k* is given by the sum of all the loops of length *k* and the sum of the products of disjunct loops that have combined length *k*. Feedback at the different levels also corresponds to the coefficients of the characteristic polynomial of the system's matrix.

Loop Analysis considers two criteria for stability, the Routh-Hurwitz criteria (Hurwitz, 1895; Routh, 1877). The first criterion states that feedback at all levels is negative (Routh, 1877). The second criterion is satisfied by the Hurwitz determinants (Hurwitz, 1895) being positive and it asserts that negative feedback of long loops cannot be stronger than negative feedback of shorter loops. This can be represented by a series of inequalities, the first of which is:

$$\mathrm{F_1} * \mathrm{F_2} + \mathrm{F_3} > 0. \tag{3}$$

Eq. 3 defines the second Hurwitz determinant, which is used as second condition for stability for loop models with three and four variables (Puccia and Levins, 1985). For loop models with five variables the formula for the third Hurwitz determinant applies:

$$-(F_1 * F_2 + F_3) * F_3 + (F_1 * F_4 + F_5) * F_1 > 0. \quad (4)$$

It is also possible to conduct a sensitivity analysis of each feedback level and Hurwitz determinant to each element in the matrix (Hosack et al., 2009). The procedure counts how many times each direct effect in the model appears in stabilising (negative) and destabilising (positive) elements (feedback cycles) in the calculation of Hurwitz determinants or feedback levels and divides it by the total number of feedback cycles in which the same direct effect appears. The index takes values from -1 to 1; for sensitivities of feedback levels, values close to -1 indicate that the direct effect appears only in stabilising feedback cycles, a value of 0 indicates that the direct effect appears in the same number of stabilising and destabilising feedback cycles, while a value close to +1 indicates that the direct effect has a highly destabilising effect on the system. The opposite is true for sensitivities of Hurwitz determinants. For a detailed description of this method see (Hosack et al., 2009).

For any loop model with *n* variables there are *n* possible points of entry for a press perturbation, one for each variable; a table of predictions can be built to show how the equilibrium value of each variable changes in response to a press perturbation in itself or in any other variable. The matrix of predictions is given by the adjoint of the system's matrix. Each prediction is the result of the sum of all direct and indirect paths from the perturbed variable to the response variable and the feedback of their complementary subsystems, which are the subsystems of variables and links not included in a given path. The change in the equilibrium value (*) of the variable X_j due to a change in the parameter c in the variable X_i is given by Eq. 5.

$$\frac{\partial X_j^*}{\partial c} = \frac{\sum_{i,j}\left(\frac{\partial X_i}{\partial c}\right)(p_{ij})(F^{comp})}{F_n} \quad (5)$$

The variable that is subjected to the press perturbation is X_i, each possible path from X_i to X_j is p_{ij} and the feedback of the complementary subsystem is F^{comp}, while F_n is the overall feedback of the system. The sum of the products $\left(\frac{\partial X_i}{\partial c}\right)(p_{ij})(F^{comp})$ for each possible path (p_{ij}) determines the overall effect of the press perturbation acting on X_i on the variable X_j. Each element in the sum can be positive, negative or 0 and the magnitudes of the effects are not specified. Therefore, the prediction can have a certain degree of sign indeterminacy that can range from completely undetermined to uncertain predictions. Each prediction in the adjoint matrix can be weighted by the total number of cycles contributing to it, which is called the absolute feedback; the ratio between the absolute value of each element of the adjoint matrix and the corresponding value of absolute feedback gives the weighted-prediction matrix (Dambacher et al., 2002). Weighted predictions are a measure of uncertainty and range from 0 to 1; values near 0 represent predictions that are highly indeterminate, while values of 1 indicate that the prediction is completely reliable in terms of its sign.

2.1. Property rights scenarios

In the resource management literature property is mainly considered as owned or affected by private individuals, local communities or governments (Acheson, 2006; Hoffmann, 2013). In this study we consider an open access scenario in which there are no rules governing property rights, and scenarios where property rights are owned by a central authority or the local community of users. In order to represent both marine and terrestrial systems, we do not consider private property, which is often not possible in a marine context where boundaries are difficult to define and wildlife is highly mobile. Some studies have highlighted the importance of nesting and institutional variety in governance structures (Dietz et al., 2003), showing how mixed strategies can determine the success of CPRs (Pirotta and Lusseau, 2015). Following these studies we also considered hybrid scenarios, where property rights are shared

between the users and a third party. Within these property rights regimes we also considered different management tools.

2.1.1. Open access- This scenario (Fig. 1a) describes an unregulated system where access and use of the resource are unregulated. This core model builds on previous work on sustainable tourism by (Casagrandi and Rinaldi, 2002); the equations presented by Casagrandi and Rinaldi were converted into a signed digraph and all the following scenarios are derived from this core model by adding feedbacks representing governance structures. This simple model represents all main system components: tourists (T), the capital (C), intended as structures available for tourism activities, and the environment (E). Resource users, tour operators, are included in C in this model. All the links to the variable T (Fig. 1) represent the attractiveness of the site; tourists are attracted by the presence of amenities and environmental quality, while the attractiveness of the site decreases with overcrowding. The infrastructure degrades and investment is needed to renew it. Tourists generate revenues that are invested in new infrastructures. Tourism infrastructures, such as hotels, vehicles for wildlife or sightseeing tours, roads etc., negatively impact the environment as do the tourists (Casagrandi and Rinaldi, 2002). The environment is assumed to have a carrying capacity with density-dependence effects (Casagrandi and Rinaldi, 2002) and it is not assumed to be in pristine conditions in absence of tourism. Therefore the environment exploited by human activities is kept far from its carrying capacity and will exhibit a positive self-regulation. We do not assign magnitudes to the effects just described and, therefore, they can range from negligible, to very strong ones.

2.1.2. State ownership – We investigated the outcomes of different state-ownership property rights scenarios on the same tourism-based system described in the open access model by adding a variable for state intervention (S) (Fig. 1b). We developed three scenarios. State intervention is stimulated by a reduction in environmental quality in all the models and the

224 state always implements measures to improve environmental quality. This negative loop
225 between S and E represents an adaptive management strategy. The subsidies scenario (pink
226 link in Fig. 1b) represents a situation in which the state subsidises the industry to build new
227 infrastructures. In the licensing scenario (blue link in Fig. 1b), the state holds property rights on
228 the resource and limits the expansion of the infrastructure by issuing licences to a restricted
229 number of users. In the access fee scenario (Fig. 1b, yellow link), state intervention controls
230 the number of tourists allowed in the area (e.g., entrance fee for a national park).

231 *2.1.3. User group ownership* – In these two scenarios (Fig. 1c) property rights are owned by the
232 users' group, which becomes an explicit variable in the model, U. Users have the right to
233 access and use the resource, exclude other individuals from the resource and have alienation
234 rights. Users could own a quota of time to spend with wildlife, or a quota of trips they can
235 make, and they can sell or lease their quota to other users. The positive links from T to U and
236 from U to C represent this market-based system of individual transferable quotas (ITQ);
237 according to the flow of tourists in a year, the users can decide to retain or sell their quotas,
238 thus increasing or decreasing the number of structures available to the tourists (for example
239 the number of boats available for trips). In the second scenario the users also implement an
240 adaptive management strategy (green links in Fig. 1c).

241 *2.1.4. Hybrid* – The hybrid scenarios (Fig. 1d) are a combination of the last two. Here property
242 rights are shared between the users' group and a third party. The users still have access, use,
243 exclusion and alienation rights, but the government (Fig. 1d, in orange) or an agency funded by
244 the users (Fig. 1d, in green) is in charge of monitoring and managing environmental quality.

245 For each of these systems we used the Routh-Hurwitz criteria to determine whether the
246 system's equilibrium was stable or unstable to pulse perturbations. Given the qualitative
247 nature of the relationships described in the models, equations 2, 3 and 4 may have uncertain

results due to the sum of positive and negative quantities with no specified magnitude. We built 10000 quantitative matrices, drawing values for the relationships between variables from random uniform distributions ($a_{ij} \sim U\ (0, 1)$) keeping the same sign pattern as the original qualitative model. We repeated the stability analysis on these matrices and the proportion of quantitative systems that met the stability criteria was used as a measure of the system's potential for stability. Secondly, we conducted the sensitivity analysis (Hosack et al., 2009) of the stability criteria to identify which relationships in the system predominantly drive the scope for the system to achieve sustainability. Lastly, we obtained predictions of the system's behaviour after a press perturbation to determine whether the system has potential to achieve TBL sustainability.

The R package "LoopAnalyst" (Dinno, 2013; R Core Team, 2015) was used for conducting stability analysis and producing prediction tables, while sensitivity analysis was conducted in MATLAB (version 8.3.0.532, release 2014a, The MathWorks, Inc., Natick, Massachusetts, United States). R and MATLAB code are available as online supporting information (Appendices A & B respectively).

3. Results

3.1. Potential and conditions for stability to pulse perturbations

None of the systems was unconditionally stable (Table 1). The two users' group ownership scenarios presented the highest potential for stability, followed by the open-access scenario; after a pulse perturbation, these systems have the highest chance to go back to their equilibrium state. A tourism SES under all the other scenarios has a good chance to be displaced from its equilibrium state after a small perturbation and either move to a different equilibrium, or present oscillatory instability (Levins, 1974; Puccia and Levins, 1985).

Table 1. Potential for stability for all the models expressed as the proportion of quantitatively specified systems that met all stability criteria

Model	Potential for stability
Open access	10.48%
Subsidies	4.24%
Licensing	7.98%
Access fee	7.17%
User group ownership 1	21.42%
User group ownership 2	18.72%
Hybrid 1	5%
Hybrid 2	2%

The self-effect of E was consistently destabilising in all the scenarios (Appendix C). The environment needs to be at or close to its carrying capacity, where its rate of change is at its minimal. The positive loop between T and C was also crucial in determining stability in all the scenarios (Appendix C). In order for the system to be stable, infrastructures should not be a strong attractor for tourists and only a small proportion of tourists' revenues should be reinvested in building new infrastructure.

Some management strategies were destabilising for the system. In the subsidies scenario, the state intervention to subsidise the industry decreased potential for stability (Table C.2), while in the other two state ownership scenarios, the limiting strategies put in place by the government (licences and access fee) stabilised the system by creating negative feedback (Tables C.3 and C.4). However, the second stability criteria was usually sensitive to these

negative links (Tables C.3 and C.4); these strategies tend to create long negative feedbacks that can potentially overwhelm short ones, thus decreasing potential for stability.

In both the users' group ownership and the hybrid scenarios, the positive path from T to C through U, which represents the system of ITQ, was crucial in determining sustainability (Tables C.5, C.6, C.7 and C.8). These links add positive feedback to the system, which tends to move the system away from its equilibrium state after a perturbation; however, they also create positive long feedbacks that counterbalance negative short ones, thus decreasing the probability of oscillatory instability of the system after a perturbation (Puccia and Levins, 1985).

The adaptive management strategy implemented by the government (state ownership and first hybrid scenarios; Tables C.2, C.3, C.4 and C.7), the users (second user group ownership scenario; Table C.6) or by the agency funded by the users (second hybrid scenario; Table C.8) to maintain environmental quality always increased the potential for sustainability.

3.2. Predictions and Triple Bottom Line sustainability

The open access scenario did not present any potential for TBL sustainability; most of the predictions (Table 2) showed negative responses of the variables to positive press perturbations to the system.

Table 2. Predictions of responses to press perturbations for the open access scenario. In response to an increase in the column variable, the equilibrium value of the variable in the

corresponding row either increased (green), decreased (red), or we could not determine the response qualitatively (white). T: tourists; C: capital; E: environment

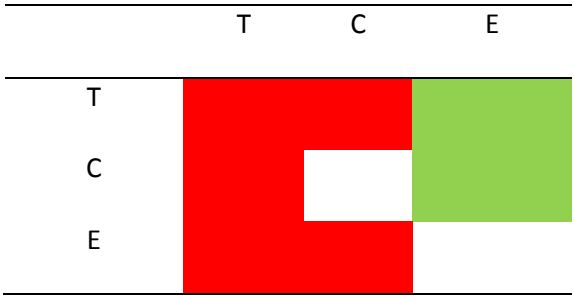

One common result among the three state ownership scenarios (Table 3) was the absence of response of the environment to any press perturbation in the system, except for perturbations to S. State intervention then acted as a buffer of the environment, absorbing all the press perturbations that enter the system (Puccia and Levins, 1985). This result highlights the importance of an adaptive strategy to natural resource management. Only the subsidies scenario was not compatible with the concept of TBL sustainability, while a licencing scenario offered scope for the industry to grow sustainably (Table 3). However, in this scenario, it is uncertain how the capital will respond to an increase in the number of tourists. There are two ways T can influence C (Fig. 1b, blue link): the direct effect is positive, while the indirect path is negative (an increase in T has a negative effect on E, which will stimulate S to reduce C). When the direct positive feedback cycle is stronger than the indirect negative one, the response of the capital will be positive and TBL sustainability achievable. This condition is opposite to the conditions for stability; among the simulated quantitative systems, most of the stable ones showed a negative response of C to increases in T, even though positive responses were also possible (Fig. D.1). This indicates that TBL sustainability is possible, but very difficult to achieve in a licencing scenario. The same was true for the “access fee” scenario (Table 3).

Table 3. Predictions of responses to press perturbations for state ownership scenarios. The equilibrium value of the variable in the corresponding row either increased (green), decreased (red), or was not affected (yellow) in response to an increase in the column variable. Some responses could not be determined qualitatively (white) and for ambiguous responses (shaded green or red) we provide values of weighted feedback. Values of 0.5 give a sign determination that exceeds 90% (Dambacher, Li & Rossignol 2003). T: tourists; C: capital; E: environment; S: state intervention

Responses	Inputs to			
Subsidies	T	C	E	S
T				(0.3)
C				(0.3)
E				(0.5)
S				(0.5)
Licensing	T	C	E	S
T				
C				(0.3)
E				(0.5)
S				(0.5)
Access fee	T	C	E	S
T				
C				
E				(0.5)
S				(0.5)

Group property rights regimes, which showed higher resilience to pulse perturbations, had no potential for TBL sustainability (Table 4). In the first scenario, there is a high number of negative responses to positive inputs to the system. The second scenario showed a very high degree of indeterminacy (values of weighted feedback < 0.5 (Dambacher et al., 2003)) and some negative responses, which means that TBL sustainability is not likely to be achieved.

Table 4. Predictions of responses to press perturbations for users' group ownership scenarios. The equilibrium value of the variable in the corresponding row either increased (green) or decreased (red) in response to an increase in the column variable. Some responses could not be determined qualitatively (white) and for ambiguous responses (shaded green or red) we provide values of weighted feedback. Values of 0.5 give a sign determination that exceeds 90% (Dambacher, Li & Rossignol 2003). T: tourists; C: capital; E: environment; U: users

Responses	Inputs to			
Scenario 1	T	C	E	U
T				
C				
E			(0.3)	
U				(0.5)
Scenario 2	T	C	E	U
T	(0.3)	(0.3)		(0.3)
C			(0.3)	(0.3)
E	(0.5)	(0.3)	(0.3)	(0.5)
U	(0.3)		(0.3)	(0.5)

In contrast, the two hybrid scenarios, had predictions compatible with the concept of TBL sustainability. There was only one negative response in the first scenario (Table 5): following an increase in state intervention, the environment could degrade. This counter-intuitive response was uncertain (weighted feedback = 0.3; Table 5). Moreover, the conditions for this response to be positive were the same as the conditions for sustainability and this response was always positive in quantitatively stable systems (Fig. D.2a). The undetermined predictions of the response of users to an increase in the number of users could potentially be a problem for social justice. If the negative self-loops of T, C and U are weaker than the positive loop between T and C, then the number of users decreases, with a potential for monopolisation. This condition is never satisfied in stable systems, so the response of U to inputs to U is always positive in stable systems and TBL sustainability achieved (Fig. D.2b). The second scenario showed more uncertainty (Table 5). An increase in tourism structures gave an undetermined response of the capital itself. Conditions for this response to be positive were the same as conditions for stability and the capital always responded positively to positive inputs to the capital in quantitative stable systems (Fig. D.3a). The same was true for the response of the environment and users to an increase in users (Fig. D.3b & c) and the response of the environment to an increase in the management effort of the agency (Fig. D.3c). These responses were always positive in quantitative stable systems. Therefore, this scenario guarantees sustainability according to the TBL sustainability concept in presence of conditions for stability to pulse perturbations.

Table 5. Predictions of responses to press perturbations for hybrid scenarios. The equilibrium value of the variable in the corresponding row either increased (green), decreased (red), or was not affected (yellow) in response to an increase in the column variable. Some responses could not be determined qualitatively (white) and for ambiguous responses (shaded green or red) we provide values of weighted feedback. Values of 0.5 give a sign determination that

exceeds 90% (Dambacher, Li & Rossignol 2003). T:tourists, C: capital, E: environment, U: users, A: external agency

Responses	Inputs to				
Scenario 1	T	C	E	U	S
T					
C					
E					(0.3)
U					
S			(0.3)		(0.7)
Scenario 2	T	C	E	U	A
T					
C					
E					(0.3)
U					
A	(0.5)		(0.5)	(0.7)	(0.7)

4. Discussion

A qualitative approach to SESs modelling provided a way to test alternative governance structures and assess whether they would influence the sustainability of nature-based tourism. SESs are subjected to press-pulse dynamics (Collins et al., 2011) and in order to predict the outcomes of different management strategies we need to investigate their responses to both press and pulse perturbations. In order to be sustainable, a SES needs to be resilient to pulse perturbations and, in presence of a press change, such as economic growth, the system needs

379 to maintain economic profitability of human activities, environmental quality and social justice
380 (TBL sustainability).

381 Here we showed that in instances when nature-based tourism systems can be considered
382 exploiting a common good (Pirotta and Lusseau, 2015) then they are most likely to be
383 unstable, regardless of the management strategy adopted. A small pulse perturbation can
384 potentially drive the system away from its equilibrium and either move it to a new equilibrium
385 state or cause oscillations. However, all the systems tested in this study had some potential for
386 local stability to pulse perturbations.

387 Some management scenarios exhibited higher potential for stability than others. However, this
388 potential for stability to pulse perturbations did not always correspond to the potential for
389 sustainable development of the industry. For instance, open access and user group ownership
390 scenarios showed the highest potential for stability (Table 1), but they had no potential to
391 achieve TBL sustainability (Tables 2 & 4). In open access commons, overexploitation of the
392 resource happens because the perceived benefits of overuse are always higher than the
393 perceived losses (Hardin, 1968) and users have no incentives to invest in the resource or
394 conserve it for the future (Acheson, 2006). Therefore, without any regulation, a CPR is doomed
395 to degradation and human activities to failure. Local knowledge of user groups can confer
396 more resilience to user-managed SESs (Berkes et al., 2003), but it does not guarantee
397 sustainable growth (Table 4) (Ostrom, 1990).

398 State ownership scenarios were very sensitive to pulse perturbations (Table 1), but two of
399 them offered a better outlook for TBL sustainability. The licensing and the access fee scenario
400 could potentially lead to a stable system that has scope for sustainable growth, but this
401 outcome was possible only in a very narrow range of parameter space. Conditions for stability
402 (Appendix C) contrasted with conditions for TBL sustainability (Table 3), therefore only a few

quantitative stable systems had scope for sustainable growth (Fig. D.1). Moreover, links that were stabilising at low levels, formed long negative loops that can overwhelm shorter ones and cause oscillations in system's behaviour. These results indicate that it might be very difficult to find a balance between all these conditions and design effective rules. These management strategies are very difficult to design because of a high degree of uncertainty surrounding the number of licences that should be issued or the price of the access fee (Acheson, 2006). In a perfectly designed system, these strategies would guarantee a stable SES that can grow sustainably. However, perfectly designed management strategies are rarely achieved, therefore, in SESs governed by centralised institutions, sustainable development is possible only by trading off some of the system's robustness to pulse perturbations.

Nonetheless, locally user-defined market-based strategies can fail too. The ITQ strategy, represented in our models by the positive links between the tourists, the users and the capital (Fig. 1c & d), was highly destabilising for the system (Appendix C). Introducing positive feedback into the system contributed to destabilisation. Previous studies have suggested that simple strategies, where the market or the government alone have complete control over the resource, often fail and that a combination of different institutional arrangements creates better conditions for sustainable governance (Dietz et al., 2003; Meinzen-Dick, 2007; Pirotta and Lusseau, 2015). We showed that in a management regime where property rights and responsibilities are shared between the users and a third party there is a good potential for sustainable development of the industry (Table 5). In these strategies, users still retain their rights of access and use, exclusion and alienation, but the management of the resource is left to the government (Fig. 1d, in orange) or an external agency funded by the users (Fig. 1d, in green). However, these scenarios are very sensitive to pulse perturbations, which means that there is a very narrow range of parameter space where these systems can be sustainable and

grow. ITQs need to be very carefully designed in order to promote sustainable use of the resource, social equity and economic efficiency (McCay, 1995).

We conclude that sustainability is very hard to achieve in our SES. Casagrandi and Rinaldi (2002) showed that in open access tourism SESs, sustainability is often at risk because small perturbations can have dramatic effects on profitability of the industry and on the environment. We generalise this finding to the main governance structures available for common goods. We also found mechanisms consistently influencing SESs sustainability. First, it is important to understand what attracts tourists to a site, because a strong demand for tourism infrastructures is very likely to lead to instability. Also, in order to maintain sustainability, a higher proportion of the tourism revenues should be invested in renewing old infrastructures, instead of investing in new ones.

Secondly, the exploited common resource needs to be maintained in a state where its rate of change is minimal; for example, keeping a wildlife population close to its carrying capacity. The self-enhancing effect that results from the resource being exploited to the point that it is far from its 'pristine' abundance/density strongly affects the resilience of the system. This result discourages the use of Maximum Sustainable Yields (MSY) in wildlife management. Many studies have discouraged the application of the MSY concept in the management of harvested populations and ecosystems, on the basis that it would lead to extinction of some species instead of guaranteeing a sustainable use (Geček and Legović, 2012; Larkin, 1977; Legović et al., 2010). Our results confirm that exploitation of natural resources to the point that they are far from their carrying capacity decreases the sustainability of the harvesting and not the contrary.

Using an integrated qualitative approach that takes into account economic profitability, environmental quality and some form of social justice, we have identified which management

regimes have the highest potential for sustainability, and the conditions necessary for them to achieve it. We agree with Ostrom's Law that one-size-fits-all solutions fail in most real situations. This happens because SESs are highly unstable and sustainability is only possible in very narrow regions of parameter space. We have showed that some management strategies have higher potential for sustainability than others, but each strategy must be carefully tuned to each particular situation. Although our models of a tourism-based system are extremely simplified, they are representative of all the main components of Ostrom's conceptual map (Ostrom, 2007): resource system, users, governance system and their interactions. More detailed SESs can now be explored, by unpacking these highest-tier conceptual variables (Ostrom, 2007). We propose that this qualitative approach can be a powerful diagnostic tool to identify variables and their combinations that affect sustainability of different governance systems in common-pool resource management.

Acknowledgments

This work was funded by the University of Aberdeen and Scottish Natural Heritage (SNH) and their support is gratefully acknowledged. We thank MASTS (the Marine Alliance for Science and Technology for Scotland) for their role in funding this work and B. Leyshon and F. Manson (SNH) for fruitful discussion.

References

Acheson, J.M., 2006. Institutional Failure in Resource Management. Annu. Rev. Anthropol. 35, 117–134. doi:10.1146/annurev.anthro.35.081705.123238

Berkes, F., Colding, J., Folke, C., 2003. Navigating social-ecological systems: building resilience for complexity and change. Cambridge University Press.

Casagrandi, R., Rinaldi, S., 2002. A Theoretical Approach to Tourism Sustainalbility. Conserv. Ecol. Online 6(1):13.

Collins, S.L., Carpenter, S.R., Swinton, S.M., Orenstein, D.E., Childers, D.L., Gragson, T.L., Grimm, N.B., Morgan, G.J., Harlan, S.L., Kaye, J.P., Knapp, A.K., Kofinas, G.P., Magnuson, J.J., McDowell, W.H., Melack, J.M., Ogden, L. a., Philip, R.G., Smith, M.D., Whitmer, A.C., 2011. An integrated conceptual framework for long-term social-ecological research. Front. Ecol. Environ. 9, 351–357. doi:10.1890/100068

Dambacher, J.M., Li, H.W., Rossignol, P. a., 2002. Relevance of community structure in assessing indeterminacy of ecological predictions. Ecology 83, 1372–1385. doi:10.1890/0012-9658(2002)083[1372:ROCSIA]2.0.CO;2

Dambacher, J.M., Li, H.W., Rossignol, P.A., 2003. Qualitative predictions in model ecosystems. Ecol. Modell. 161, 79–93. doi:10.1016/S0304-3800(02)00295-8

De'ath, G., Fabricius, K.E., Sweatman, H., Puotinen, M., 2012. The 27-year decline of coral cover on the Great Barrier Reef and its causes. Proc. Natl. Acad. Sci. U. S. A. 109, 17995–17999. doi:10.1073/pnas.1208909109

Dietz, T., Ostrom, E., Stern, P.C., 2003. The struggle to govern the commons. Science (302) 5652, 1907–1912. doi:10.1126/science.1091015

Dinno, A., 2013. LoopAnalyst: A collection of tools to conduct Levins' Loop Analysis.

Elkington, J., 1998. Cannibals with Forks: The Triple Bottom Line of 21st Century Business. New Society Publishers.

Geček, S., Legović, T., 2012. Impact of maximum sustainable yield on competitive community. J. Theor. Biol. 307, 96–103. doi:10.1016/j.jtbi.2012.04.027

Hardin, G., 1968. The tragedy of the commons. Science (162) 3859, 1243–1248.

Hilborn, R., Ludwig, D., 1993. The limits of applied ecological research. Ecol. Appl. 3, 550–552.

Hoffmann, S., 2013. Property, possession and natural resource management: towards a

conceptual clarification. J. Institutional Econ. 9, 39–60. doi:10.1017/S1744137412000264

Hosack, G.R., Li, H.W., Rossignol, P. a., 2009. Sensitivity of system stability to model structure. Ecol. Modell. 220, 1054–1062. doi:10.1016/j.ecolmodel.2009.01.033

Hurwitz, A., 1895. On The Conditions Under Which an Equation Has Only Roots With Negative Real Parts. Math. Annelen 65, 273–284.

Larkin, P.A., 1977. An epitaph for the concept of maximum sustainable yield. Trans. Am. Fish. Soc. 106, 1–11.

Legović, T., Klanjšček, J., Geček, S., 2010. Maximum sustainable yield and species extinction in ecosystems. Ecol. Modell. 221, 1569–1574. doi:10.1016/j.ecolmodel.2010.03.024

Levins, R., 1974. Discussion paper: The qualitative analysis of partially specified systems. Ann. N. Y. Acad. Sci. 231, 123–128.

McCay, B.J., 1995. Social and ecological implications of ITQs: an overview. Ocean Coast. Manag. 28, 3–22. doi:10.1016/0964-5691(96)00002-6

Meinzen-Dick, R., 2007. Beyond panaceas in water institutions. Proc. Natl. Acad. Sci. U. S. A. 104, 15200–15205. doi:10.1073/pnas.0702296104

Meletis, Z. a., Campbell, L.M., 2007. Call It Consumption! Re-Conceptualizing Ecotourism as Consumption and Consumptive. Geogr. Compass 1, 850–870. doi:10.1111/j.1749-8198.2007.00048.x

O'Connor, S., Campbell, R., Cortez, H., Knowles, T., 2009. Whale watching worldwide Tourism numbers , expenditures and expanding economic benefits, a special report from the International Fund for Animal Welfare. Yarmouth MA, USA.

Ostrom, E., 2009. A general framework for analyzing sustainability of social-ecological systems. Science (325) 5939, 419–422. doi:10.1126/science.1172133

Ostrom, E., 2007. A diagnostic approach for going beyond panaceas. Proc. Natl. Acad. Sci. U. S. A. 104, 15181–15187. doi:10.1073/pnas.0702288104

Ostrom, E., 1990. Governing the Commons. The Evolution of Institutions for Collective Action. Cambridge university press.

Ostrom, E., Burger, J., Field, C.B., Norgaard, R.B., Policansky, D., 1999. Revisiting the Commons: Local Lessons, Global Challenges. Science (284) 5412, 278–282. doi:10.1126/science.284.5412.278

Ostrom, E., Janssen, M.A., Anderies, J.M., 2007. Going beyond panaceas. Proc. Natl. Acad. Sci. U. S. A. 104, 15176–15178. doi:10.1073/pnas.0701886104

Pirotta, E., Lusseau, D., 2015. Managing the wildlife tourism commons. Ecol. Appl. 25, 729–741.

Puccia, C.J., Levins, R., 1985. Qualitative Modeling of Complex Systems: An Introduction to Loop Analysis and Time Averaging. Harvard University Press.

R Core Team, 2015. R: A Language and Environment for Statistical Computing. R Found. Stat. Comput. Vienna Austria.

Routh, E.J., 1877. A Treatise on the Stability of a Given State of Motion: Particularly Steady Motion. Macmillan and Company.

Tisdell, C., Wilson, C., 2002. Ecotourism for the survival of sea turtles and other wildlife. Biodivers. Conserv. 11, 1521–1538. doi:10.1023/A:1016833300425