bioRxiv preprint doi: https://doi.org/10.1101/113647; this version posted March 27, 2017. The copyright holder for this preprint (which was not certified by peer review) is the author/funder, who has granted bioRxiv a license to display the preprint in perpetuity. It is made available under aCC-BY-NC-ND 4.0 International license.

Ethoscopes: an open platform for high-throughput *ethomics*

Quentin Geissmann[1], Luis Garcia Rodriguez[2], Esteban J. Beckwith[1], Alice S. French[1], Arian R. Jamasb[1], and Giorgio F. Gilestro[1]*

[1] Department of Life Sciences, Imperial College London, London, UK

[2] Polygonal Tree ltd. London, UK

*To whom correspondence should be addressed. E-mail: giorgio@gilest.ro; g.gilestro@imperial.ac.uk

Authors' contributions: QG, LGR and GFG designed the platform; QG and LGR wrote the software; QG and EJB performed the experiments; ARJ contributed the optomotor module; ASF contributed the AGO module; all authors contributed the manuscript.

Competing interests: The authors declare that no competing interests exist.

bioRxiv preprint doi: https://doi.org/10.1101/113647; this version posted March 27, 2017. The copyright holder for this preprint (which was not certified by peer review) is the author/funder, who has granted bioRxiv a license to display the preprint in perpetuity. It is made available under aCC-BY-NC-ND 4.0 International license.

Abstract

We present ethoscopes, machines for high-throughput ethomics in *Drosophila* and other small animals. Ethoscopes present four unique features: they provide a software and hardware solution that is reproducible and easily scalable; they perform not just real-time tracking, but faithful real-time profiling of behaviour using a supervised machine learning algorithm; they can stimulate flies in a feedback-loop mode; they are highly customisable and open source.

Understanding how behaviour is encoded in the brain is one of the ultimate goals of neuroscience. In particular, much of modern neurobiology focuses on finding the genes and the neuronal circuits underlying simple and complex behaviours alike, aiming to describe and ultimately understand how the brain processes sensory inputs into motor outputs. For many years, starting from Seymour Benzer's seminal work[1] , the fruit fly *Drosophila melanogaster* has been considered the model organism of choice to dissect the genetics of behaviour. In the past decade, *Drosophila* has also emerged as an excellent model for studying not only the genes, but the neuronal circuitry of behaviour too: the combination of a rapidly delineating connectome together with an unrivalled repertoire of genetics tools has established fruit flies as the most promising animal model to study neuronal circuits. Optogenetics, thermogenetics, a genome wide collection of RNAi lines, and a plethora of crafted and carefully described GAL4 lines constitute an unprecedented arsenal for neurobiologists interested in studying the neuronal circuitry underpinning behaviour. The limiting factor for *ethomics* - the high-throughput approach to behavioural studies - is therefore not the availability of genetic tools, but the access to an objective, reproducible and scalable system to detect and categorise behaviour. In the past few years, several computational approaches were introduced to address this limitation: some specifically dedicated to a subset of behaviours, like sleep[2–4], and others designed to be more versatile[5–8]. However, while computer-assisted analysis of behaviour has the potential of revolutionising the field, adoption and throughput of currently available techniques are limited by several factors: among others, the scope and versatility of the software itself and the requirement for a non standardised hardware-setup, with relevant problems of cost, footprint, and scalability. Here we present a tool aimed at solving these issues, providing an affordable and versatile complete suite to study *ethomics*: ethoscopes.

An ethoscope is a self-contained machine able to either record or detect in real-time the activity of fruit flies (and potentially other animals) using computerised video-tracking. It relies on an independent small single-board computer (Raspberry Pi[9]) and a high-definition camera (Raspberry Pi

bioRxiv preprint doi: https://doi.org/10.1101/113647; this version posted March 27, 2017. The copyright holder for this preprint (which was not certified by peer review) is the author/funder, who has granted bioRxiv a license to display the preprint in perpetuity. It is made available under aCC-BY-NC-ND 4.0 International license.

camera) to capture and process infrared-illuminated video up to a resolution of 1920x1080, at 30 frames per second (**Fig. 1a**). Ethoscopes are assembled in a 3D-printed case measuring approximately 10x13x19 cm (**Fig. 1b**). Although we recommend 3D printed assembly for research-grade use, we also provide detailed instruction to build a fully functional ethoscope out of LEGO bricks (**Fig. 1c**, - LEGOscope **Supplementary Material S1**) or out of folded cardboard (**Fig. 1d**, - PAPERscope **Supplementary Material S2**). These latter two options are mainly aimed at education and outreach but they may also be adopted in a real laboratory environment. The technical drawings required to 3D-print and assemble an ethoscope, along with its software (Python code on a Linux instance) are released under the open source GPL3 license and freely available on the ethoscope website (https://lab.gilest.ro/ethoscope). The combination of consumer-grade electronics, 3D printing and free open source software results into a total cost of about £80 for each machine. Limited cost, along with the fact that each ethoscope relies on its own computing power, allows for easy scaling of the entire platform.

In a typical usage scenario, several ethoscopes are placed in a climatic controlled chamber, each powered through a USB cable; ethoscopes connect via WIFI to a computer acting as data collecting station ("the hub" in **Supplementary Fig. 1a**) and are controlled remotely via a graphical web interface (**Supplementary Fig. 1** and **Supplementary Video S1**). If the hub is connected to the internet, the entire platform will receive automatic software updates from a central GIT repository. Flies to be tracked are loaded into a behavioural arena that slides and locks inside the lower part of the ethoscope (**Fig. 1a**). Alike the rest of the machine, arenas are also 3D-printed and the design of the arena to be employed depends on the nature of the experiment: some examples of arenas developed in our laboratory are provided in **Fig. 1e-k** and span arenas adopted for long term sleep experiments that may be lasting weeks (**Fig. 1e-g,j**) or short term assays such as decision making (**Fig. 1h**) and courtship (**Fig. 1i,k**). When starting an experiment, the experimenter can decide whether the activity of the animals should be tracked in real-time or whether the ethoscope should record a video to be analysed at a later time, with the ethoscope software or with another software of choice. In real-time tracking mode, ethoscopes will detect and record the position and orientation of each animal with a variable frame rate of 1-4 frames per second (**Fig. 2a-b**).

To validate the accuracy of tracking, we recorded 2736 hours of video and asked three independent experienced fly researchers to manually annotate the position of flies in 1413 frames. We then compared the manually annotated positions to the positions detected by ethoscopes, and found that

bioRxiv preprint doi: https://doi.org/10.1101/113647; this version posted March 27, 2017. The copyright holder for this preprint (which was not certified by peer review) is the author/funder, who has granted bioRxiv a license to display the preprint in perpetuity. It is made available under aCC-BY-NC-ND 4.0 International license.

the median distance between the two was 0.3 mm, corresponding to a tenth of a fly body length. In no cases, did the error exceed one body length (2.5mm). To enrich the capabilities of ethoscopes, we also implemented a real-time behavioural annotator. We created a ground-truth of 1297 videos, each lasting 10 seconds and each manually annotated by at least three experienced fly researchers (**Fig. 2c**, annotation labels were: "walking", "micro-movement" or "immobile"). Random forest variable importance[10] was used to screen for possible predictors of mobility in a supervised manner and the two highest-ranking features - maximal velocity and cumulative walked distance - were selected for further analysis (**Fig. 2d,e**). Conveniently, ROC analysis showed that maximal velocity alone appeared to serve as faithful predictor of behaviour (**Fig. 2d,e**). Therefore, not only can ethoscopes annotate the position of flies, but also detect in real-time when an animal is immobile, performing a micro-movement (such as grooming or eating), or walking, with an accuracy of 94.3% for micro-movement detection and 99.0% for walking detection.

The ability to recognize simple behaviour in real-time opens a new perspective: animal -dependent feedback-loop stimuli delivered upon behavioural trigger. Interfering with behaviour through external stimuli is an important tool for neuroscientists as it pushes beyond description and allows for more manipulative analysis. In principle, feedback loops can be used for multiple purposes: to reinforce learning, to sleep deprive animals, to stimulate or silence circuits using optogenetics, to study operant conditioning, *etc*. Systems operating feedback-loop stimuli on fruit flies were proposed before and already proved to be useful, but they are not easily compatible with a high-throughput approach and are focused on very specific usage[11,12]. We therefore designed ethoscopes so that they could be extended with modules that seamlessly connect with the machine and react to real-time analysis to trigger an action whenever a condition is satisfied. Figure 3 shows three examples of such modules: an air/gas/odour (AGO) delivery module (**Fig. 3a,b**), a rotational module capable of variable intensity(**Fig. 3d,e**), and an opto-motor module combining optogenetic stimulation and motor disturbance (**Fig. 3g,h**). Modules plug into the bottom part of the machine and are configured through the graphical web-interface, where the experimenter can set the trigger conditions that will activate the stimulus. A trigger can be a combinatorial ensemble of position, time, and behaviour (e.g. "*micro-movement for at least 20 seconds within 5mm from the food*" or "*immobile for at least 5 minutes anywhere*"). As proof of principle, we provide representative evidence of how single flies react to three different stimuli: a 5 seconds delivery of CO_2, triggered by crossing of the midline tube (**Fig. 3c**); a 2 seconds fast rotation of the tube, triggered by 20 seconds of immobility (**Fig. 3f**); a 5 seconds opto-

bioRxiv preprint doi: https://doi.org/10.1101/113647; this version posted March 27, 2017. The copyright holder for this preprint (which was not certified by peer review) is the author/funder, who has granted bioRxiv a license to display the preprint in perpetuity. It is made available under aCC-BY-NC-ND 4.0 International license.

stimulation on "moon-walker"[13] receptive flies, manually triggered (**Supplementary Video S2**). In general, flies responses to stimuli will obviously depend on the experimental paradigm of choice. On the ethoscope website, we provide detailed instruction on how to build all three modules and a description of the API needed to interface any new custom module to the ethoscope platform. Ultimately, we expect and encourage users to build modules based on their own scientific needs. One unprecedented strength of the feedback-loop module system is the ability to interact with single flies rather than with the entire population, which provides, among other things, the option of performing sham treatments.

Ethoscopes emerge from the maker culture to combine three of the most revolutionary innovations of the last decades - 3D printing, small single-board computers and machine learning - into a novel paradigm for behavioural researchers. They were designed to be easy to build, inexpensive, compatible with high-throughput research, and able to generate reproducible results. Moreover, in their LEGO and paper versions, they can serve as excellent tool for education and citizens science. Ethoscopes rely heavily on Raspberry Pis, the third best-selling computer of all time, currently running at their 3rd hardware version. We expect Raspberry Pis to continue in their evolution, and we therefore expect ethoscopes' computing power to grow accordingly. A standardised, plug-and-play, inexpensive tool for behavioural analysis – like ethoscopes are – can be instrumental for future development of the behavioural field, similarly to how activity monitors have been instrumental for the success of circadian biology.

Acknowledgements

The research leading to these results has received funding from BBSRC through BB/M003930/1, BB/J014575/1, and "Imperial College London – BBSRC Impact Acceleration Account". EJB was supported by EMBO ALTF 57-2014 and by the People Programme (Marie Curie Actions) of the European Union's Seventh Framework Programme FP7/2007-2013/ under REA grant agreement 705930. We thank the Imperial College London Advanced Hackspace (ICAH) for granting early access to their equipment. Special thanks to Stefanos Zafeiriou for technical discussions and to Anne Petzold for setting up the optogenetics crosses. The UAS-CsChrimson:mCherry line was generated by the Jayaraman laboratory (HHMI) and the moonwalking VT200107-Gal4 line was a gift of Barry J. Dickson (HHMI).

bioRxiv preprint doi: https://doi.org/10.1101/113647; this version posted March 27, 2017. The copyright holder for this preprint (which was not certified by peer review) is the author/funder, who has granted bioRxiv a license to display the preprint in perpetuity. It is made available under aCC-BY-NC-ND 4.0 International license.

153 **References**

1. Vosshall, L. B. Into the mind of a fly. *Nature* **450,** 193–197 (2007).
2. Donelson, N. *et al.* High-Resolution Positional Tracking for Long-Term Analysis of Drosophila Sleep and Locomotion Using the 'Tracker' Program. *PLOS ONE* **7,** e37250 (2012).
3. Faville, R., Kottler, B., Goodhill, G. J., Shaw, P. J. & Swinderen, B. van. How deeply does your mutant sleep? Probing arousal to better understand sleep defects in Drosophila. *Sci. Rep.* **5,** 8454 (2015).
4. Gilestro, G. F. Video tracking and analysis of sleep in Drosophila melanogaster. *Nat. Protoc.* **7,** 995–1007 (2012).
5. Branson, K., Robie, A. A., Bender, J., Perona, P. & Dickinson, M. H. High-throughput ethomics in large groups of Drosophila. *Nat. Methods* **6,** 451–457 (2009).
6. Kabra, M., Robie, A. A., Rivera-Alba, M., Branson, S. & Branson, K. JAABA: interactive machine learning for automatic annotation of animal behavior. *Nat. Methods* **10,** 64–67 (2013).
7. Pérez-Escudero, A., Vicente-Page, J., Hinz, R. C., Arganda, S. & de Polavieja, G. G. idTracker: tracking individuals in a group by automatic identification of unmarked animals. *Nat. Methods* **advance online publication,** (2014).
8. Dankert, H., Wang, L., Hoopfer, E. D., Anderson, D. J. & Perona, P. Automated monitoring and analysis of social behavior in Drosophila. *Nat. Methods* **6,** 297–303 (2009).
9. Raspberry Pi - Teach, Learn, and Make with Raspberry Pi. *Raspberry Pi* Available at: https://www.raspberrypi.org/. (Accessed: 23rd March 2017)
10. Breiman, L. Random Forests. *Mach. Learn.* **45,** 5–32 (2001).
11. Bath, D. E. *et al.* FlyMAD: rapid thermogenetic control of neuronal activity in freely walking Drosophila. *Nat. Methods* **advance online publication,** (2014).
12. Ernst, R. & Heisenberg, M. The memory template in Drosophila pattern vision at the flight simulator. *Vision Res.* **39,** 3920–3933 (1999).
13. Bidaye, S. S., Machacek, C., Wu, Y. & Dickson, B. J. Neuronal Control of Drosophila Walking Direction. *Science* **344,** 97–101 (2014).

bioRxiv preprint doi: https://doi.org/10.1101/113647; this version posted March 27, 2017. The copyright holder for this preprint (which was not certified by peer review) is the author/funder, who has granted bioRxiv a license to display the preprint in perpetuity. It is made available under aCC-BY-NC-ND 4.0 International license.

Figure Legends

Figure 1 | The ethoscope. (**a**) Exploded drawing of a prototypical ethoscope. The machine is composed of two main parts: an upper case containing the Raspberry Pi and its camera, and a lower case providing infrared light (IR) and support for the experimental arena. The two cases are separated by spacers maintaining a fix focal distance (140mm). (**b**) A rendered drawing of the assembled model showing actual size. The arena slides in place through sliding guides and locks into position. A webGL interactive 3D model is available as **Supplementary Material 1**. (**c**) The LEGOscope, a version of the ethoscope entirely built using LEGO bricks. A detailed instruction manual is provided in **Supplementary Material 2**. (**d**) A paper and cardboard version of the ethoscope, assembled using 220gsm paper and 1mm grayboard. Blueprints are provided in **Supplementary Material 3**. In all cases, ethoscopes must be powered with a 5Vdc input using a common USB micro cable either connected to the main or to a portable power-pack. Cables not shown for sake of simplicity. (**e-k**) Versatility of use with custom behavioural arenas. Examples of 7 different behavioural arenas developed in our laboratory. (**e**) Sleep arena. Most commonly used arena for sleep studies, lodging 20 individual tubes. (**f**) Long tubes arena. Used for odour delivery studies or, more generally, for behaviours where longer walking is required. (**g**) Food bullet arena. Animals are placed directly on the arena and food can be replaced by pushing in a new bullet. (**h**) Decision making arena. Can be used to study simple decision making behaviours. (**i**) Square wells arena. Can be used for courtship assay or to record activity in a bi-dimensional environment. (**j,k**) Conceptually analogs to E and I, but designed to work in high-resolution (full-HD) settings. Note that all arenas are marked with three visible reference points (indicated by a red circle in **e.**) that are used by the ethoscope to automatically align images for tracking, providing a degree of physical flexibility.

Figure 2 | Tracking and validation of behavioural classification. (**a**) In real-time tracking mode, ethoscopes record Cartesian coordinates (x,y) of each animal relative to their ROI (region of interest), along with the numbers describing an ellipsis circumscribing the animal (w,h,φ). (**b**) A screenshot of the data table recorded by ethoscope, showing four data points for a single fly. (**c**) To build a statistical model of activity, we used ethoscopes to record offline 2736 hours of video (144 hours x 19 flies) at resolution of 1280x960pixels and frame rate of 25FPS. Video fragments of the duration of 10 seconds were sampled every hour for all 19 animals and then scored by at least three experienced fly

bioRxiv preprint doi: https://doi.org/10.1101/113647; this version posted March 27, 2017. The copyright holder for this preprint (which was not certified by peer review) is the author/funder, who has granted bioRxiv a license to display the preprint in perpetuity. It is made available under aCC-BY-NC-ND 4.0 International license.

researchers in a randomised order. Consensual annotations – with a margin greater than 0.5 – were kept, resulting in a ground truth of 1297 video fragments (116 ambiguous annotations were excluded using this latter criteria). Scorers manually annotated both the position of the animal in the tube and the perceived behavioural state (i.e. immobile, micro-moving or walking). Ethoscope video-tracking were run independently on the whole video resampled at 1-5FPS, all realistic frame rates for real-time analysis. (**d**) Performance of maximal velocity and cumulative walked distance as features for 1297 annotated videos of behaviours. (**e**) Marginal distribution of maximal velocity for each behaviour, showing the thresholds used to detect movement (dotted line) and walking (dashed line). (**f**) ROC curves for movement detection. A conservative threshold of 0.36mm/s, indicated by a red dot on the curve, yields a sensitivity (TPR) of 91.26% and specificity (1-FPR) of 99.65%. (**g**) ROC curve for walking detection. A threshold of 0.9mm/s (red dot on the curve) results in sensitivity and specificity of 99.34 and 99.39, respectively.

Figure 3 | Versatility of use with behavioural feedback-loop modules. (**a**) Diagram and (**b**) detail of the air/gas/odour (AGO)-delivery module. Two independent air flows (blue and purple in the drawing) are fed into the module using external sources. The module features 10 LEGO valves, each independently controlled through a servo motor. The motor switches the air source on the valve, selecting which source will be relayed to the tube containing the fly. Available positions are: blue source, purple source, no source. (**c**) Representative response of three flies subjected to CO_2 administration using the AGO module. CO_2 release lasts 5 seconds (gray bar) and it is triggered by midline crossing (red dot). The blue line indicates the fly position in the tube over the 150 second period. (**d**) Model and (**e**) detail of the rotational module. The module employs a servo motor to turn the tube hosting the fly. Direction, speed, duration and angle of the rotation can be modulated to change the quality of the stimulus. (**f**) Representative response of three flies upon stimulation using the rotational module shown in (**d,e**). Rotation of the tube is triggered by 20 consecutive seconds of immobility (dashed line) and it is followed by 5 seconds of masking during which tracking is suspended to avoid motion artefacts (cyan area). The bottom panel shows traces of a dead fly. (**g**) Model of the optomotor module, able to simultaneously stimulate single flies with motion and light. (**h**) Detailed view of the optomotor principle. Light is directed into the tube using optical fiber. **Supplementary Videos 2** shows the optomotor module in action.

bioRxiv preprint doi: https://doi.org/10.1101/113647; this version posted March 27, 2017. The copyright holder for this preprint (which was not certified by peer review) is the author/funder, who has granted bioRxiv a license to display the preprint in perpetuity. It is made available under aCC-BY-NC-ND 4.0 International license.

Supplementary Figure S1 | The ethoscope platform. (**a**) A diagram of the typical setup. Ethoscopes, powered through a USB adapter, are connected in an intranet mesh through an Access Point (AP) or a WI-FI router. A server computer in the network acts as hub, downloading data from ethoscopes and serving a web-based user interface (UI). Ethoscopes can be controlled through the web-UI, either locally or remotely. (**b**) Screenshot of the homepage of the web-UI, showing a list of running machines and some associated experimental metadata (e.g. username and location). (**c**) Screenshot of an ethoscope control page on the web-UI, providing metadata about the experiment and a real-time updated snapshot from the ethoscope point of view.

Supplementary material 1 | Interactive 3D rendering of the assembled ethoscope – requires webGL capable browser (e.g. Google Chrome)

Supplementary material 2 | Instruction booklet for building a LEGOscope

Supplementary material 3 | Instruction booklet for building a PAPERscope

Supplementary Videos S1 | An overview of how the ethoscope platform works

Supplementary Videos S2 | The optogenetics component of the optomotor module in action. Moonwalking flies (VT200107-Gal4 :: UAS-CsChrimson) are illuminated for 5-7 seconds using a red LED (630nm) through an optical fibre.

All supplementary material can be downloaded from: https://lab.gilest.ro/papers/ethoscopes-an-open-platform-for-high-throughput-ethomics/

bioRxiv preprint doi: https://doi.org/10.1101/113647; this version posted March 27, 2017. The copyright holder for this preprint (which was not certified by peer review) is the author/funder, who has granted bioRxiv a license to display the preprint in perpetuity. It is made available under aCC-BY-NC-ND 4.0 International license.

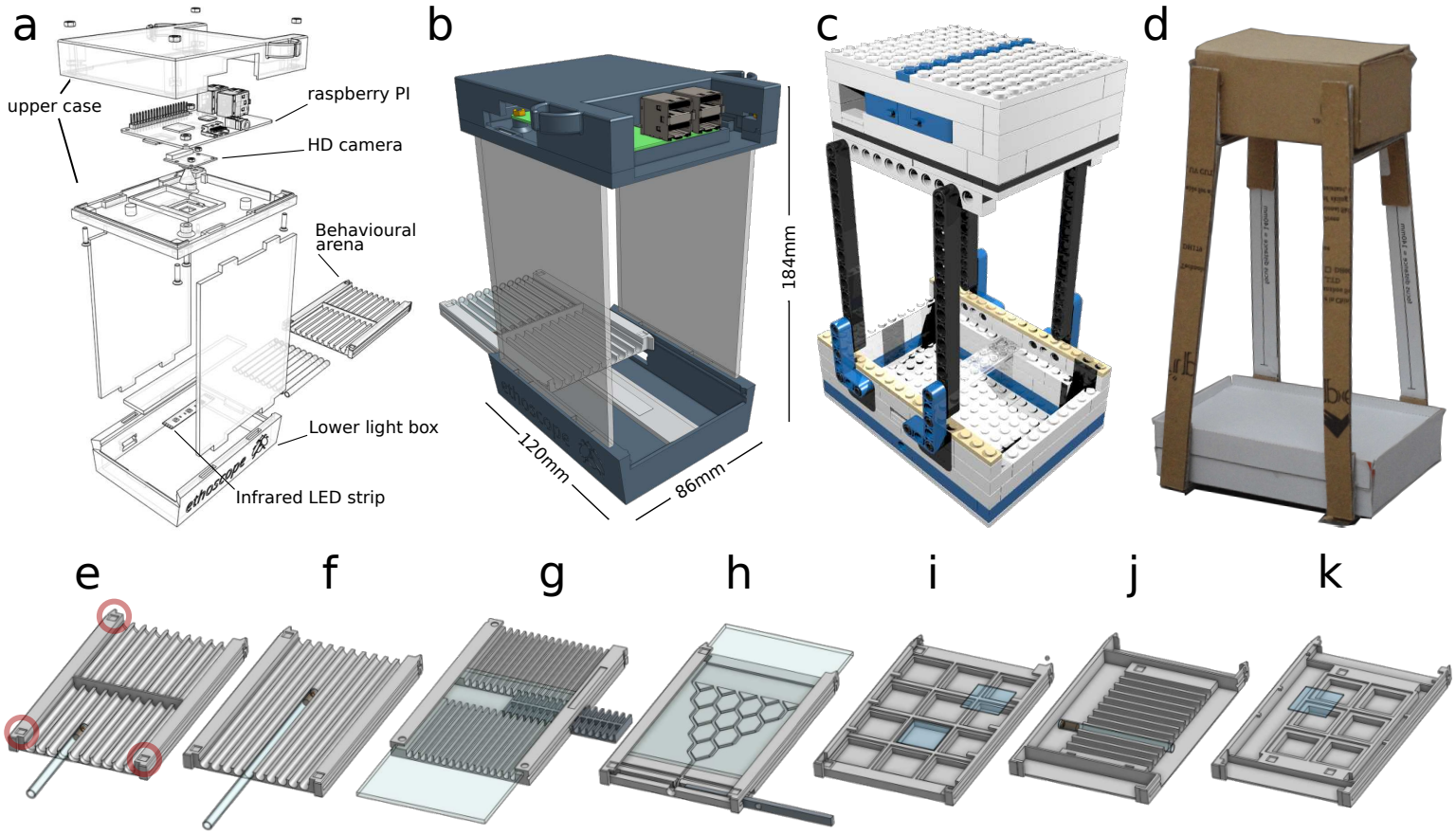

Figure 1

Geissmann et al.

bioRxiv preprint doi: https://doi.org/10.1101/113647; this version posted March 27, 2017. The copyright holder for this preprint (which was not certified by peer review) is the author/funder, who has granted bioRxiv a license to display the preprint in perpetuity. It is made available under aCC-BY-NC-ND 4.0 International license.

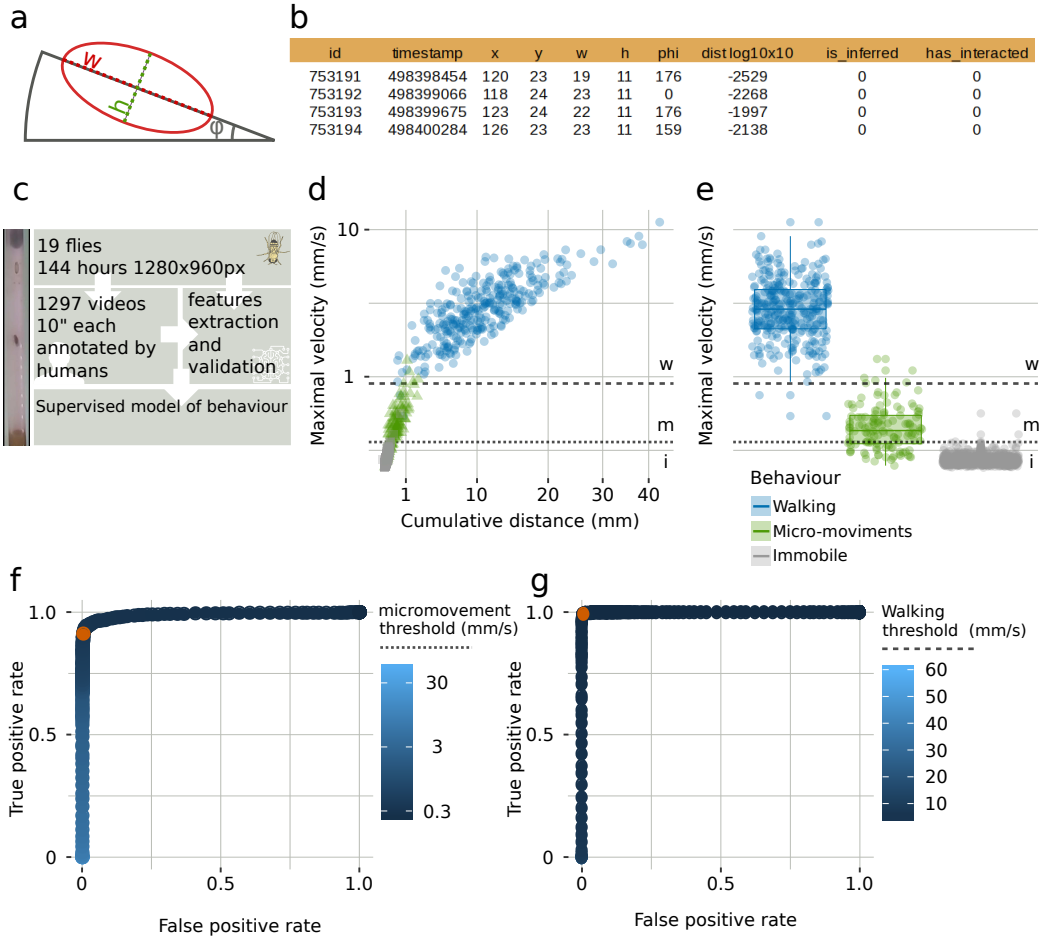

id	timestamp	x	y	w	h	phi	dist log10x10	is_inferred	has_interacted
753191	498398454	120	23	19	11	176	-2529	0	0
753192	498399066	118	24	23	11	0	-2268	0	0
753193	498399675	123	24	22	11	176	-1997	0	0
753194	498400284	126	23	23	11	159	-2138	0	0

Figure 2

Geissmann et al.

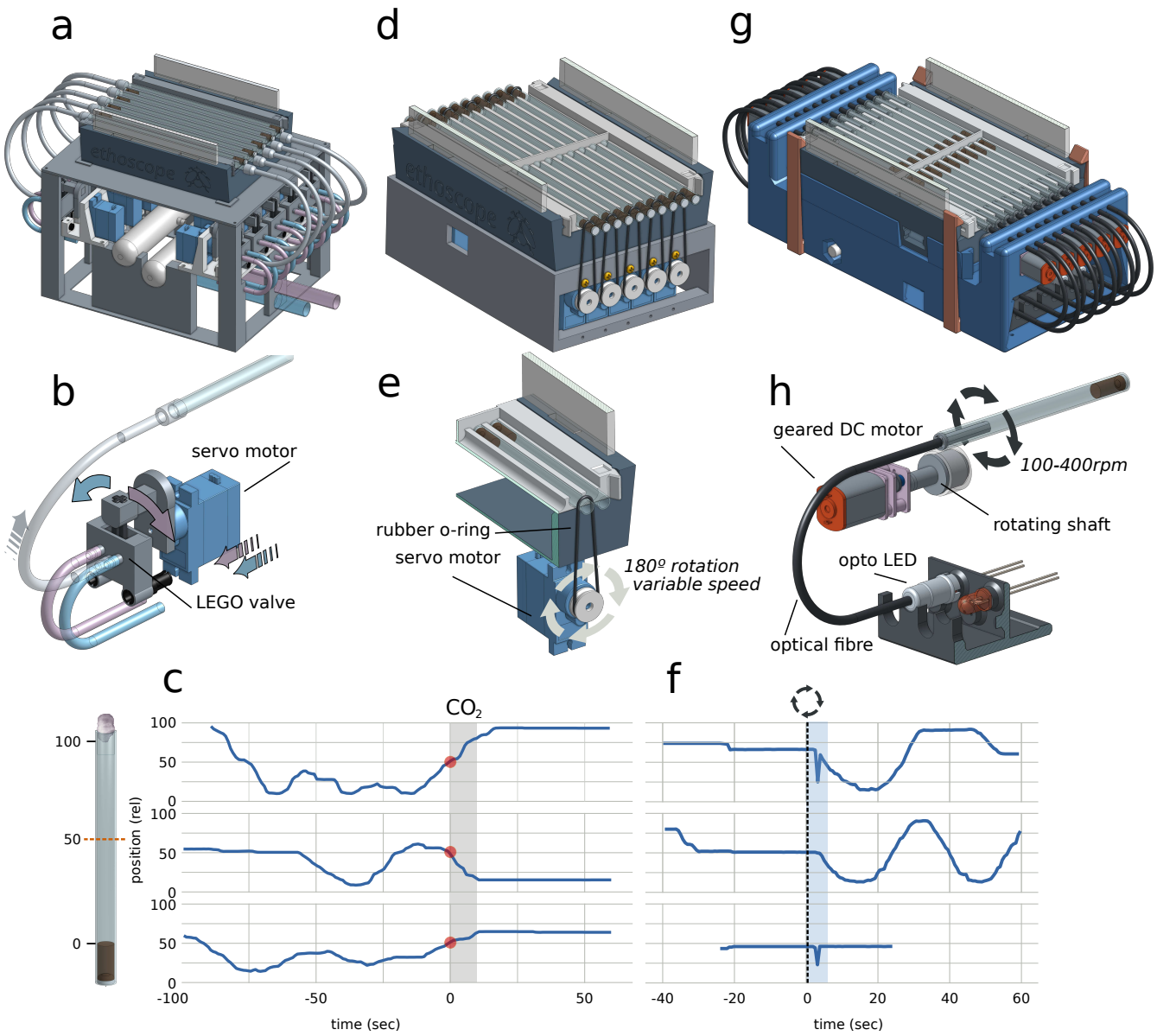

Figure 3
Geissmann et al.

bioRxiv preprint doi: https://doi.org/10.1101/113647; this version posted March 27, 2017. The copyright holder for this preprint (which was not certified by peer review) is the author/funder, who has granted bioRxiv a license to display the preprint in perpetuity. It is made available under aCC-BY-NC-ND 4.0 International license.

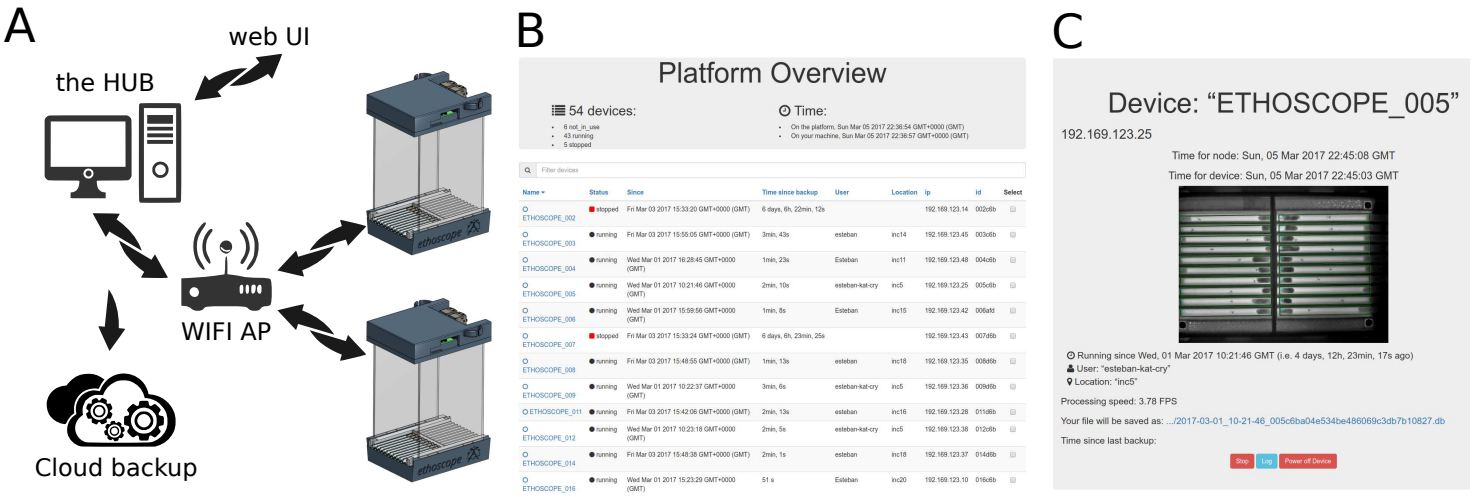

Supplementary Figure S1

Geissmann et al.

bioRxiv preprint doi: https://doi.org/10.1101/113647; this version posted March 27, 2017. The copyright holder for this preprint (which was not certified by peer review) is the author/funder, who has granted bioRxiv a license to display the preprint in perpetuity. It is made available under aCC-BY-NC-ND 4.0 International license.

5 - 99

ethoscope

lab.gilest.ro/ethoscope

1

1

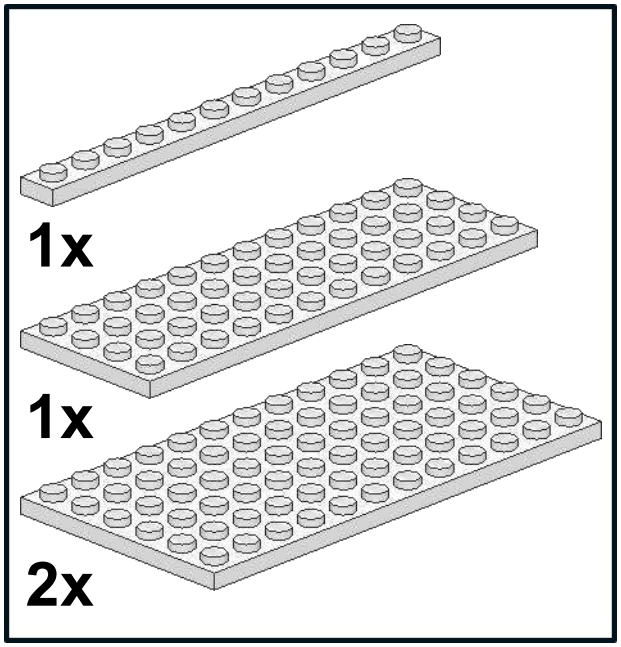

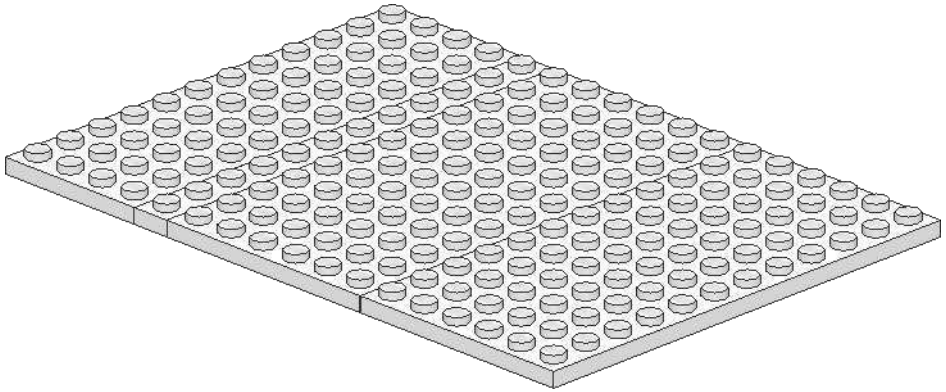

2

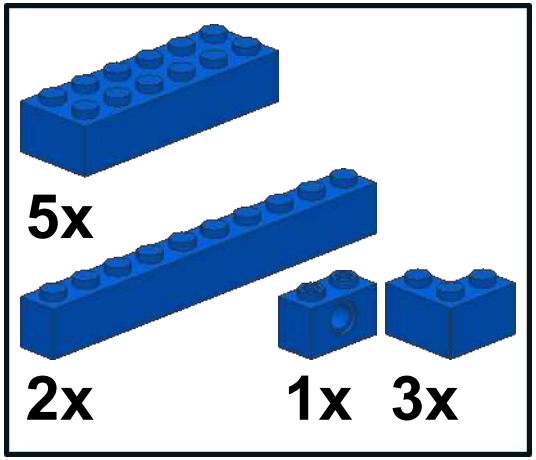

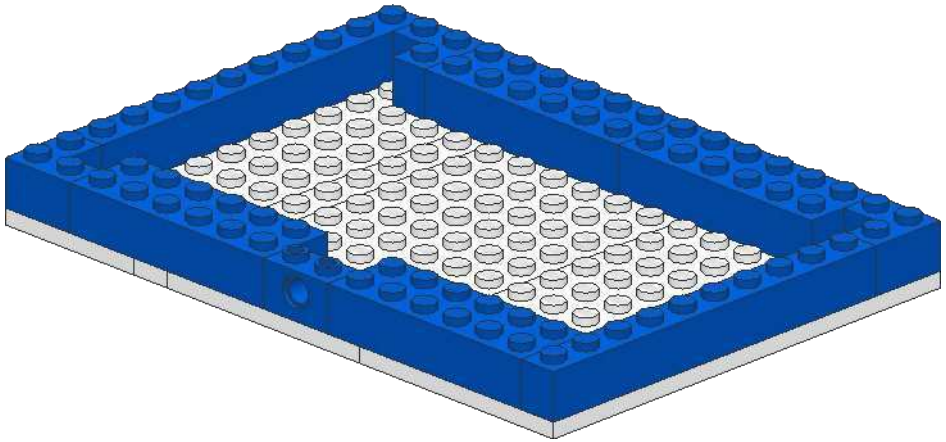

3

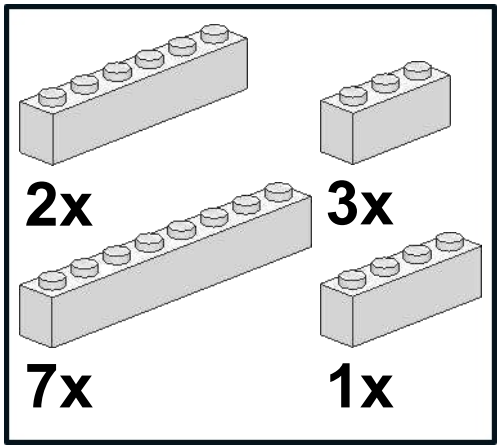

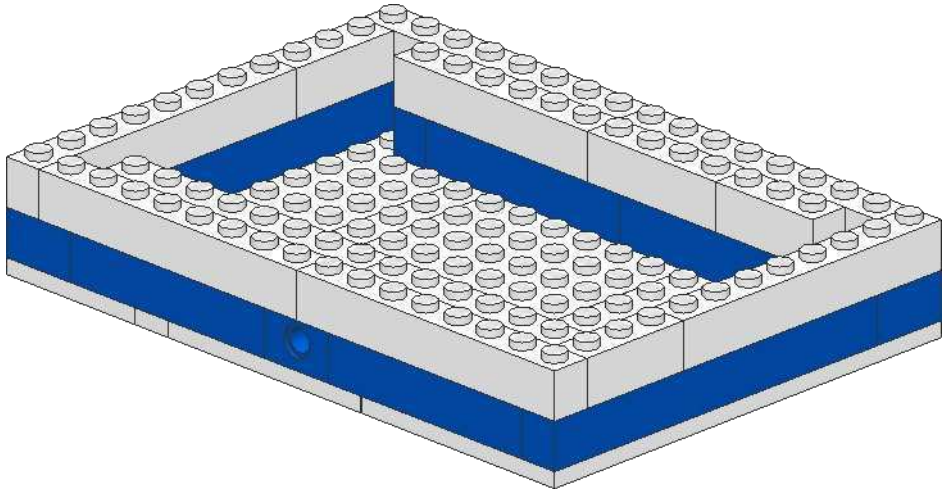

4

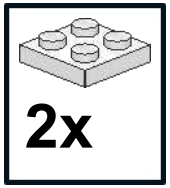

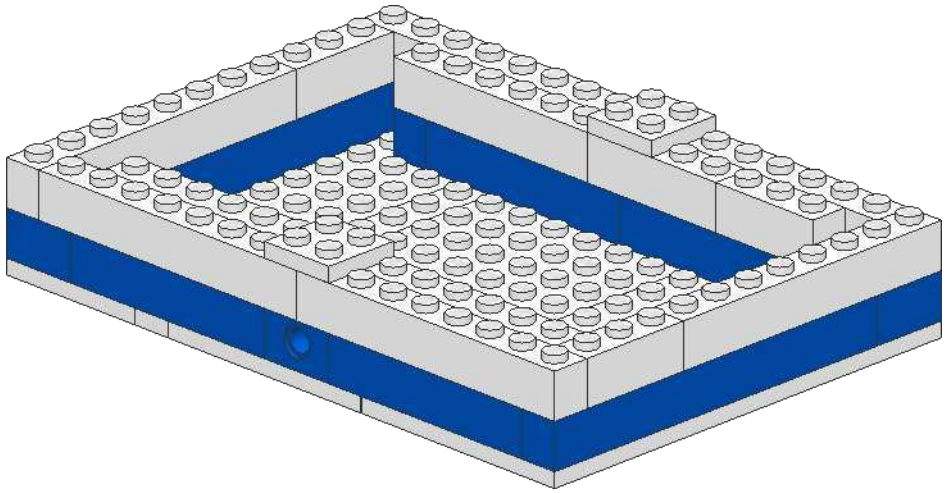

5

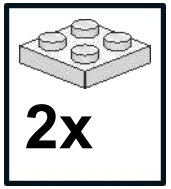

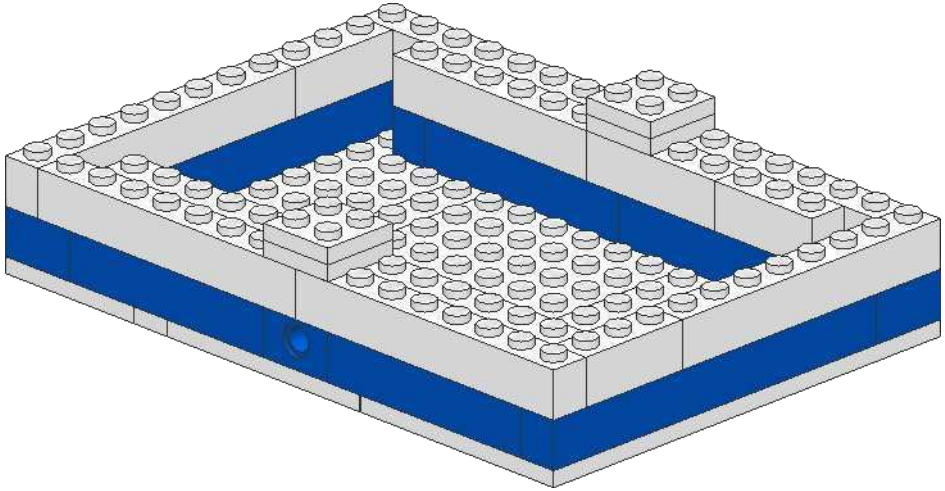

6

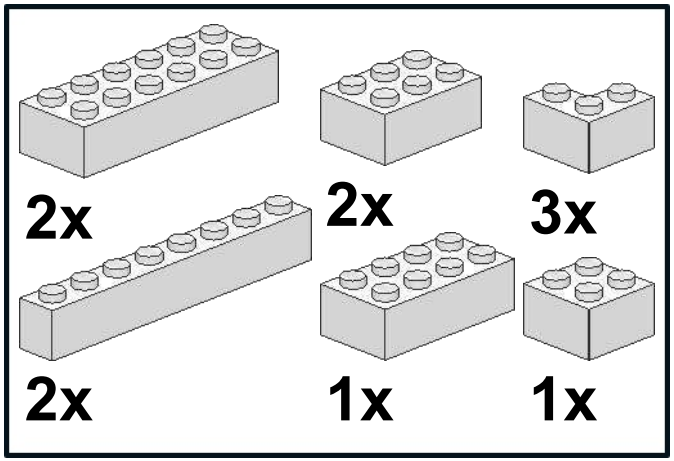

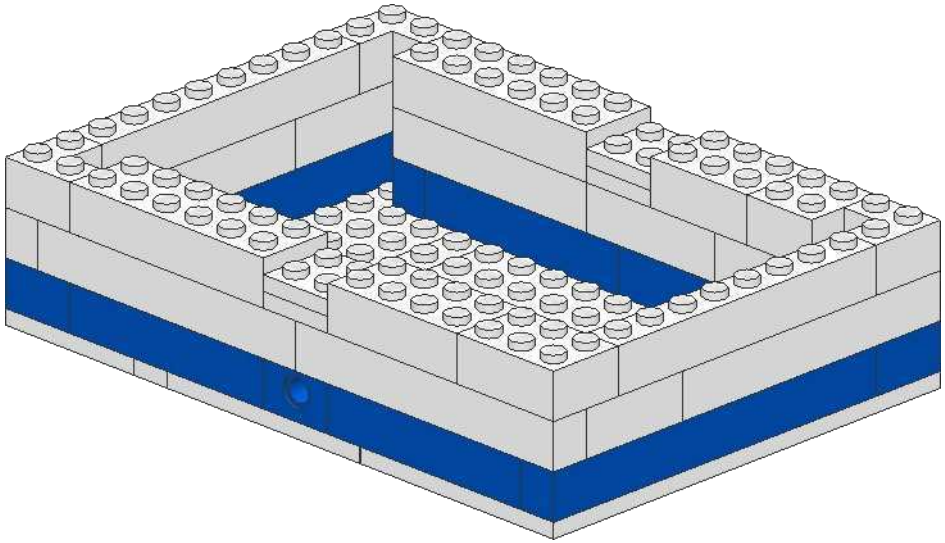

7

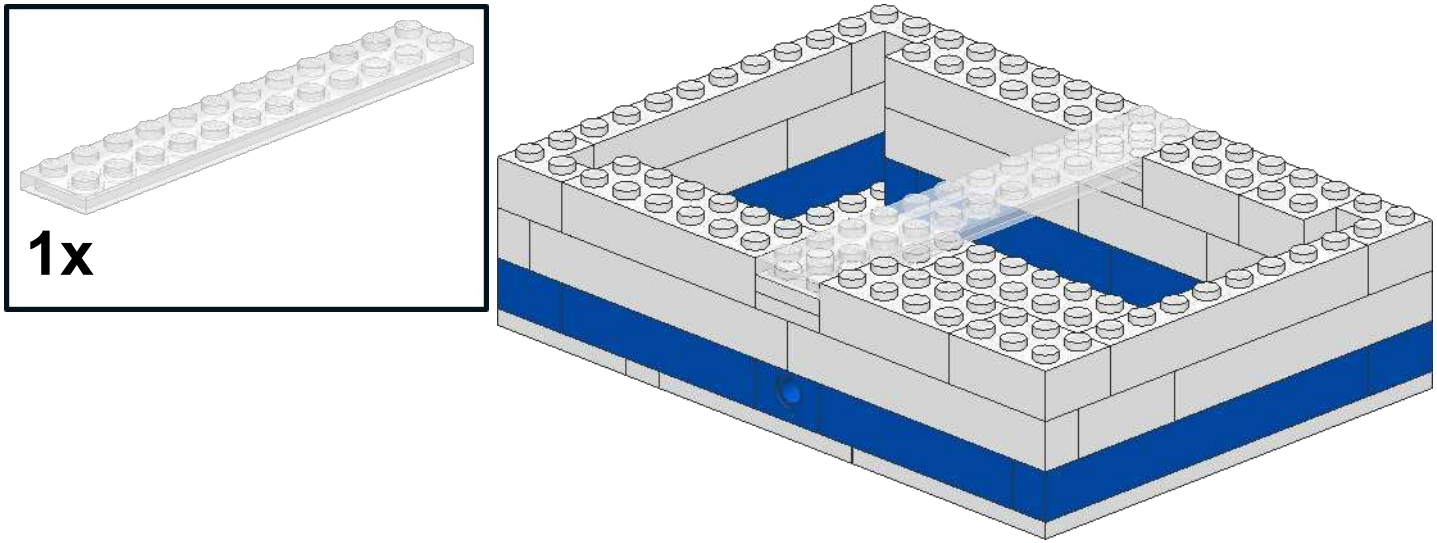

8

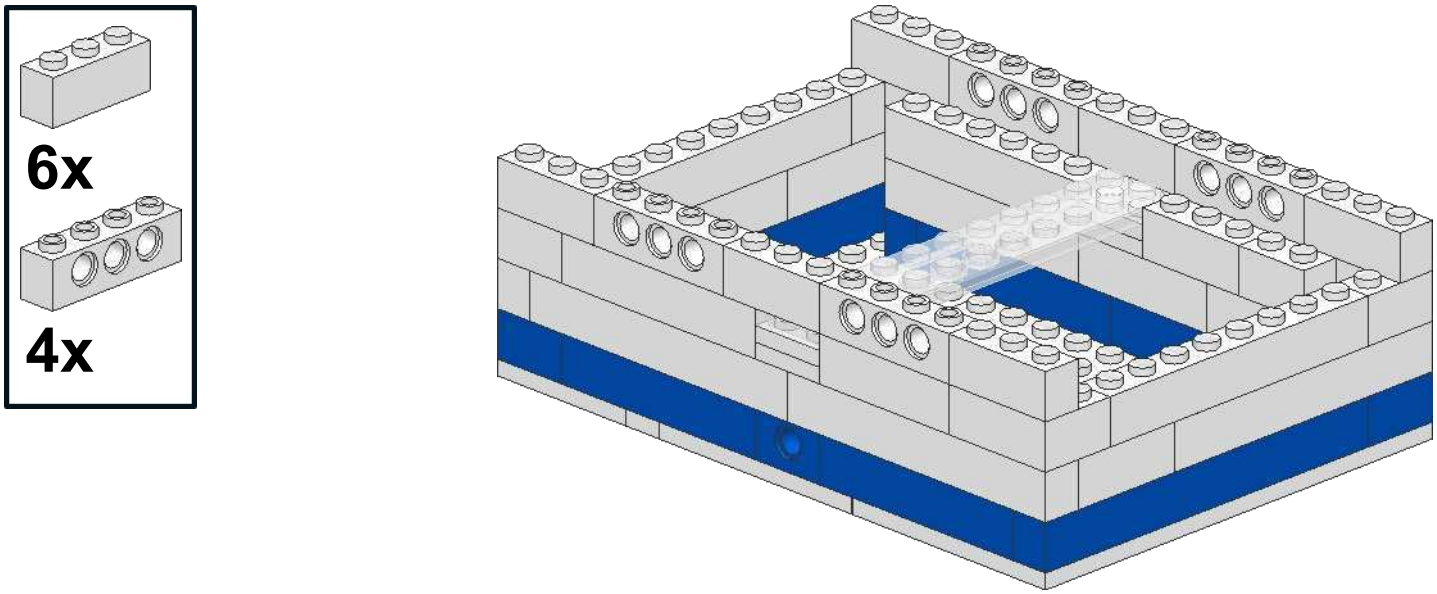

9

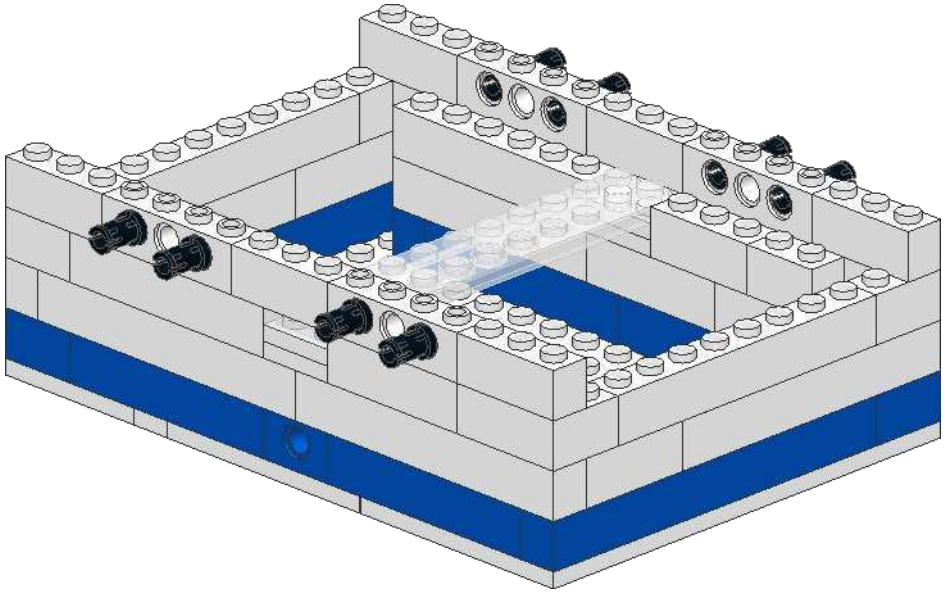

10

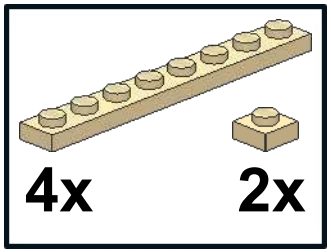

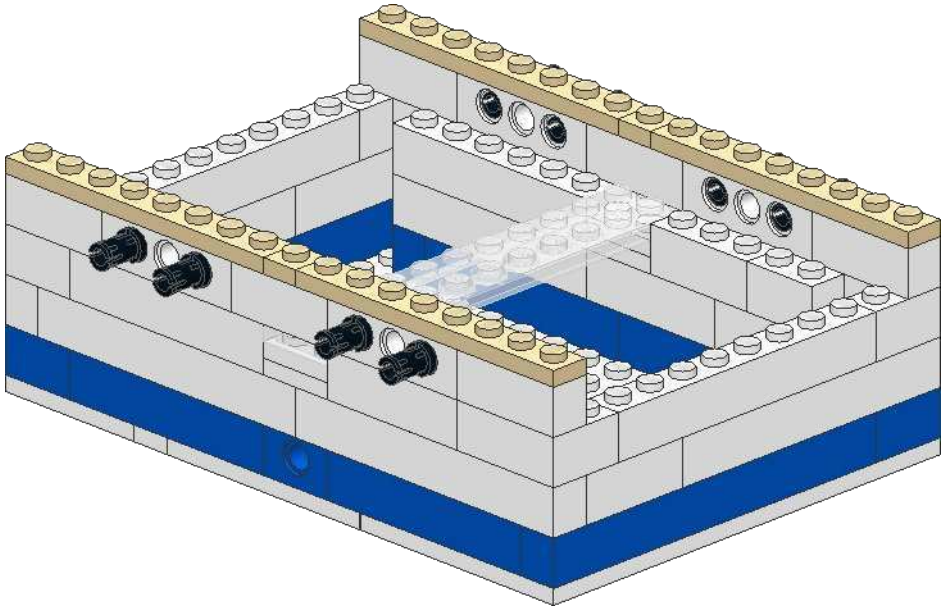

11

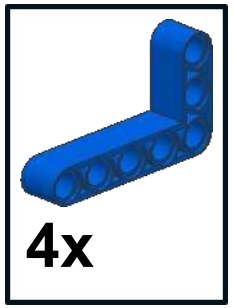

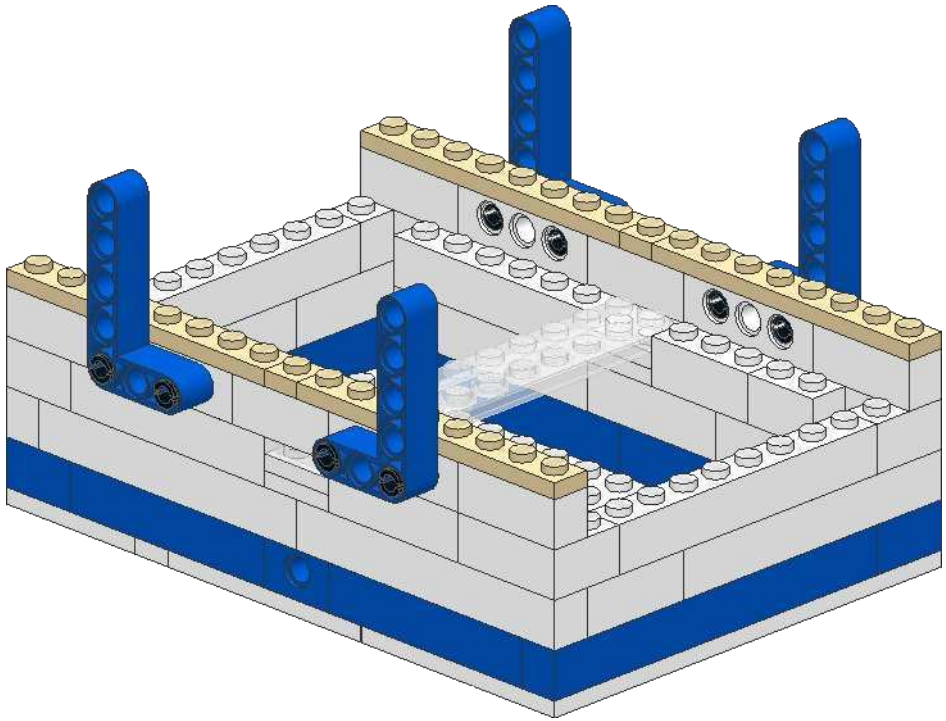

12

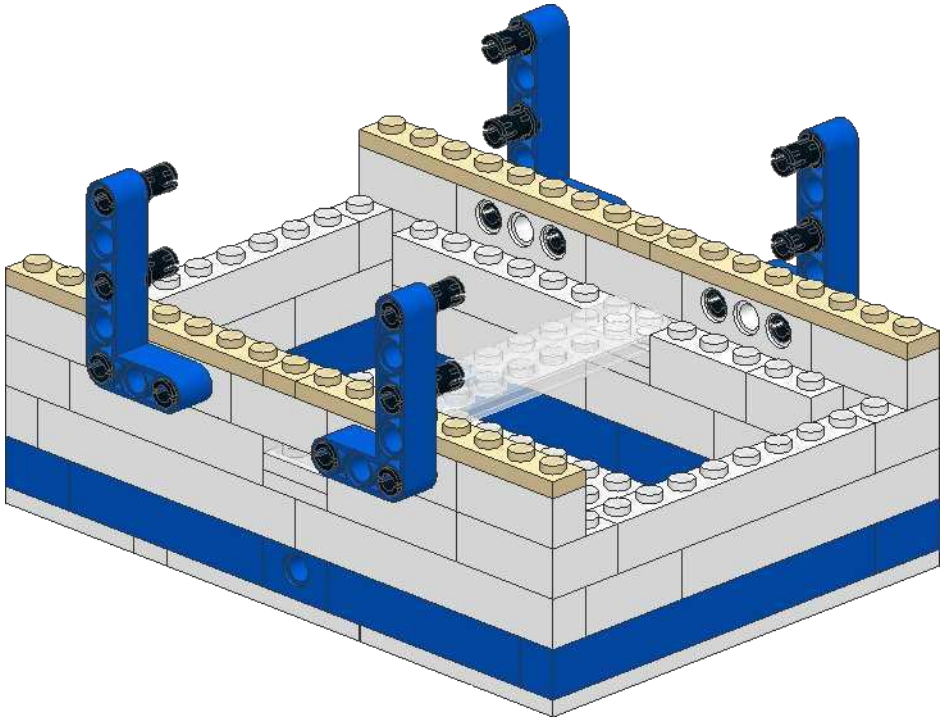

13

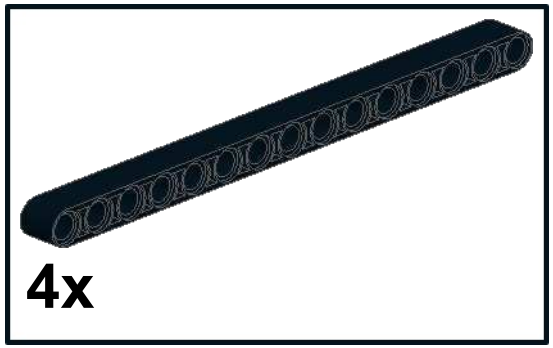

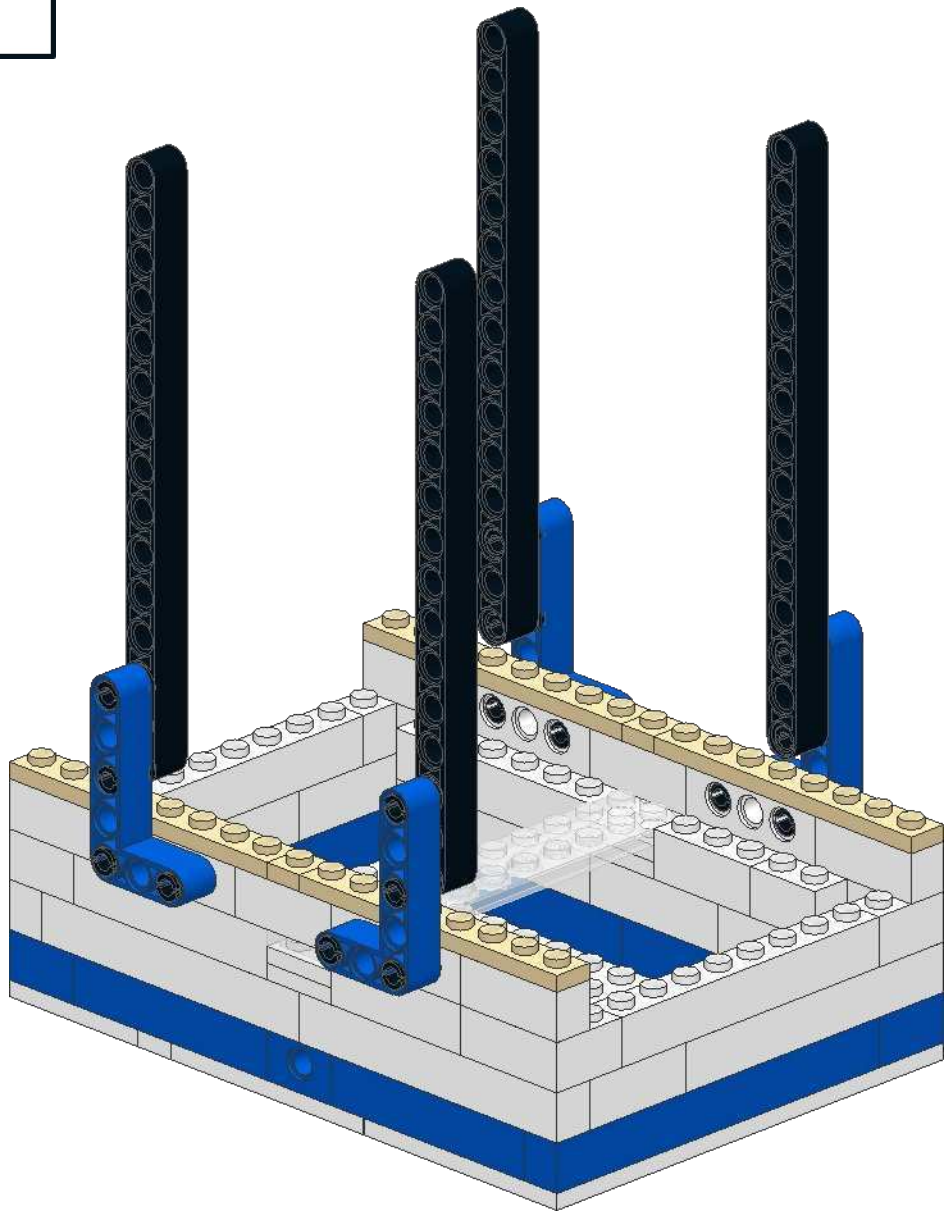

14

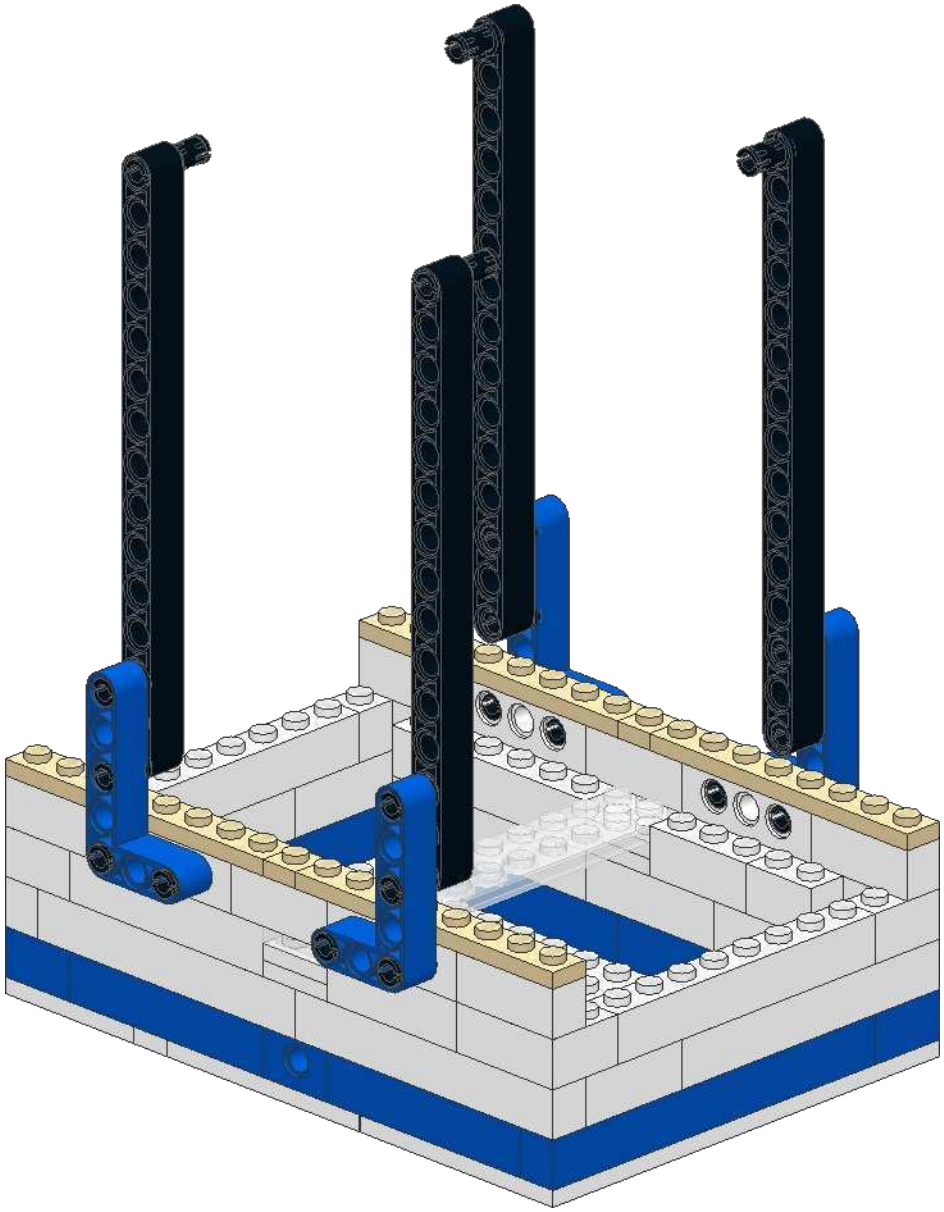

1

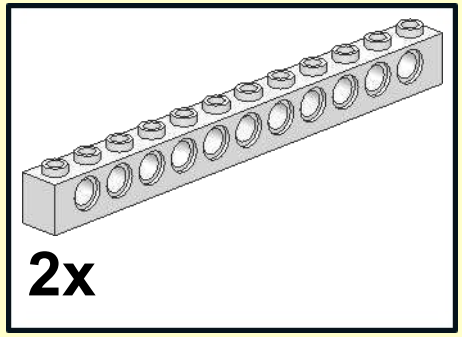

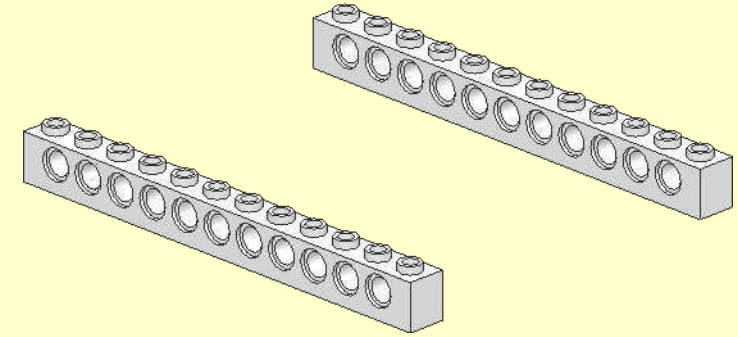

2

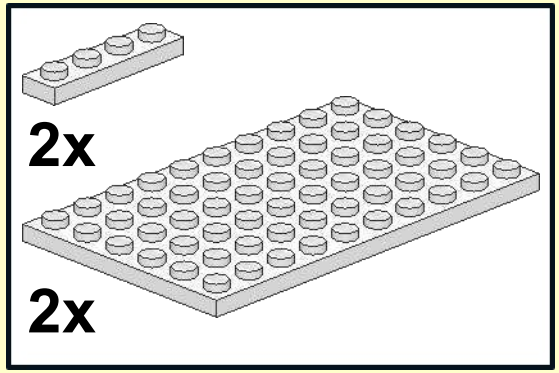

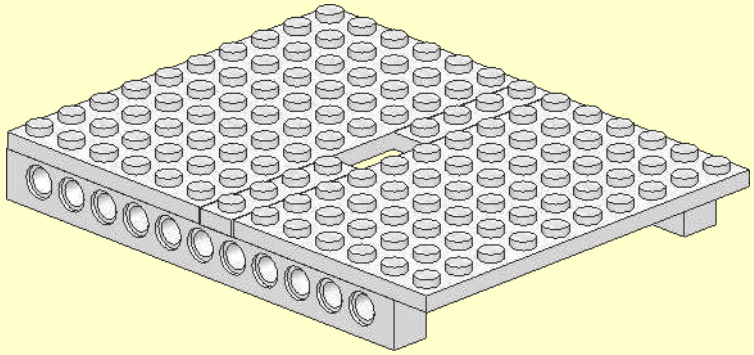

3

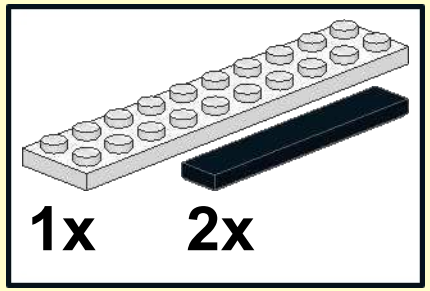

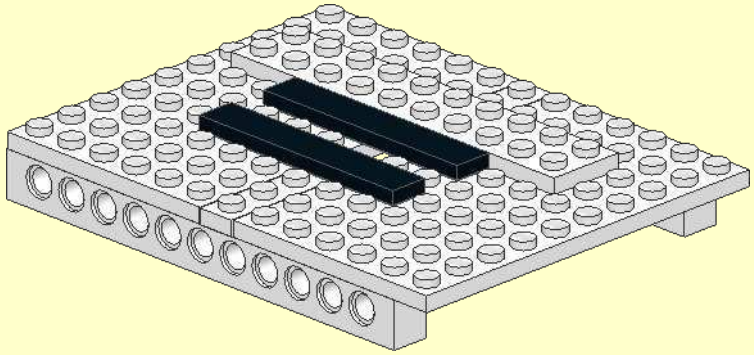

4

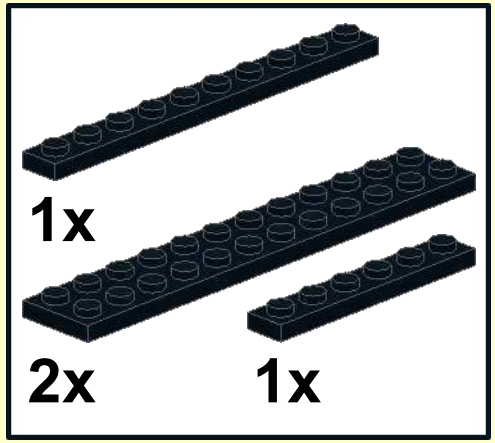

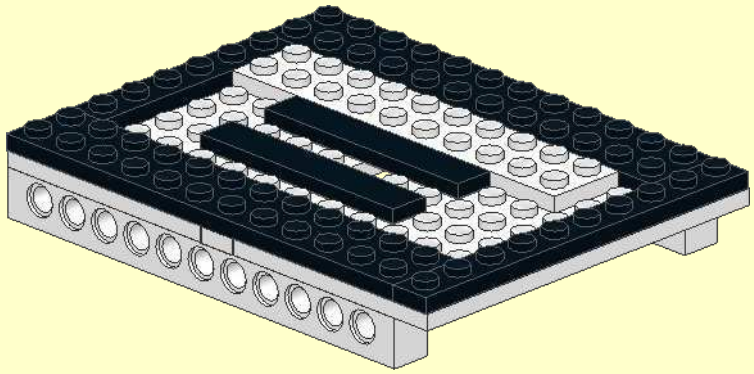

5

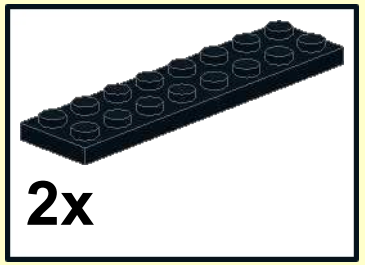

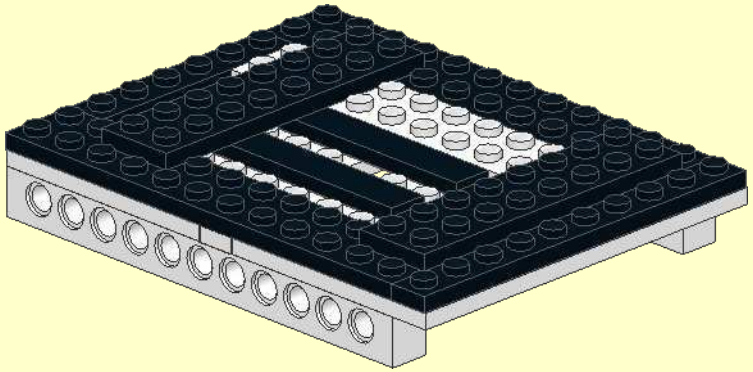

6

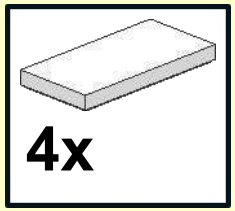

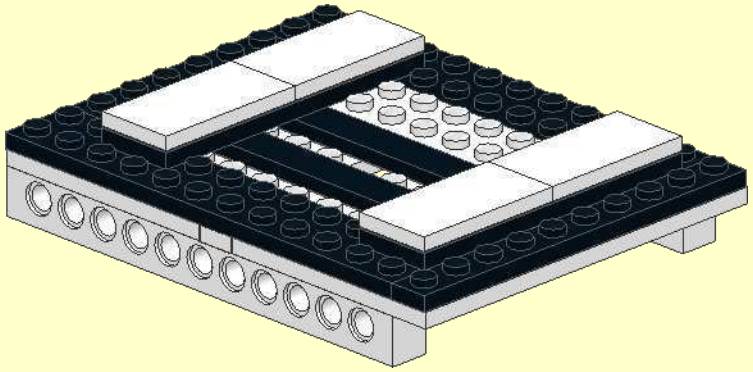

7

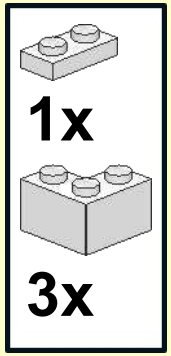

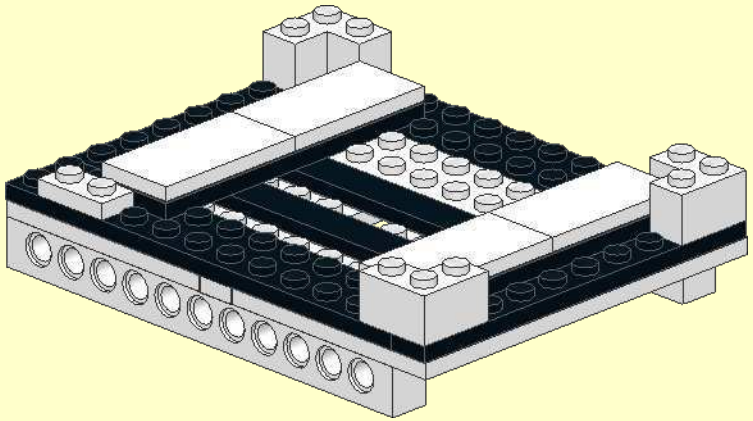

8

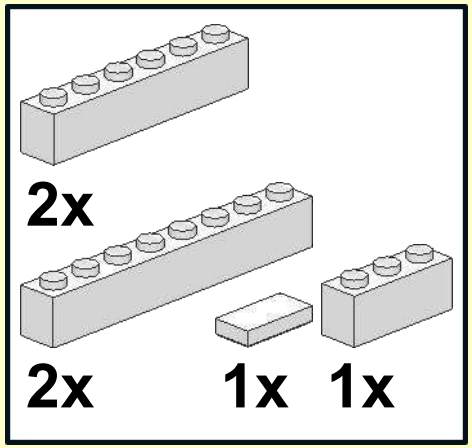

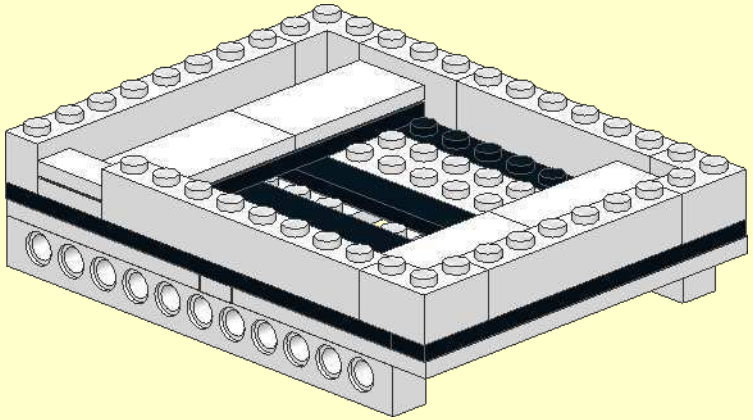

9

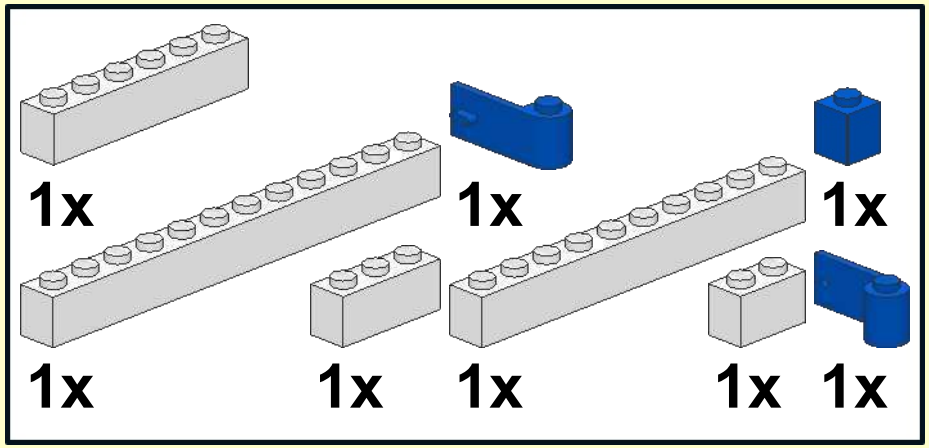

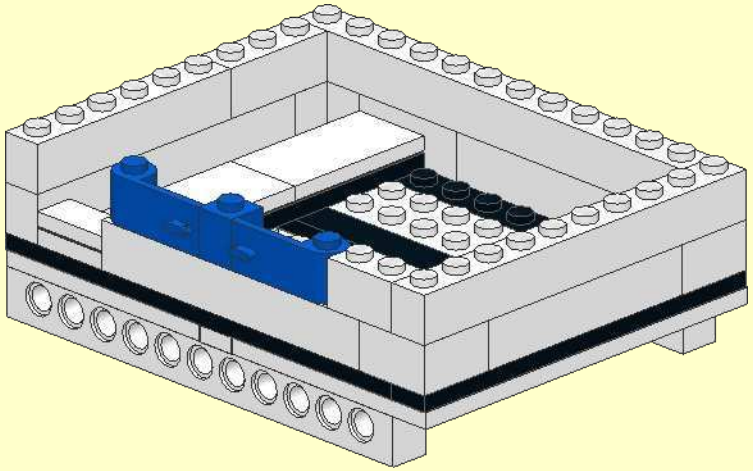

10

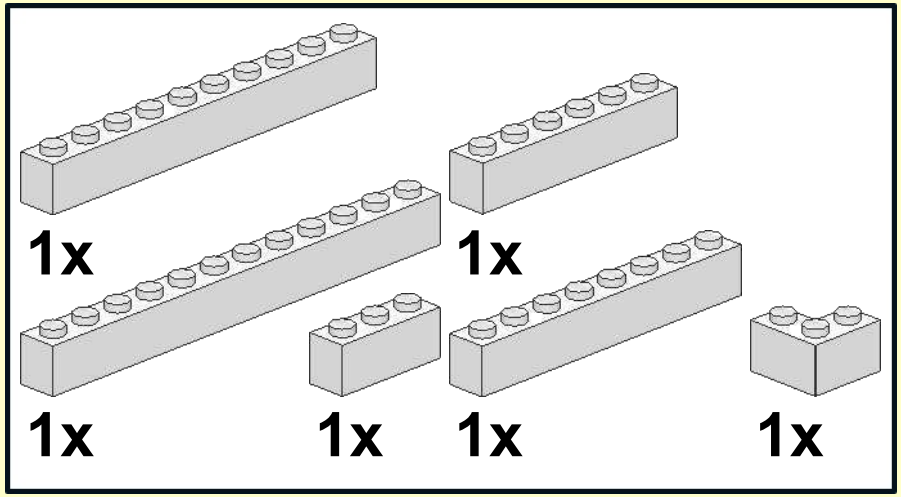

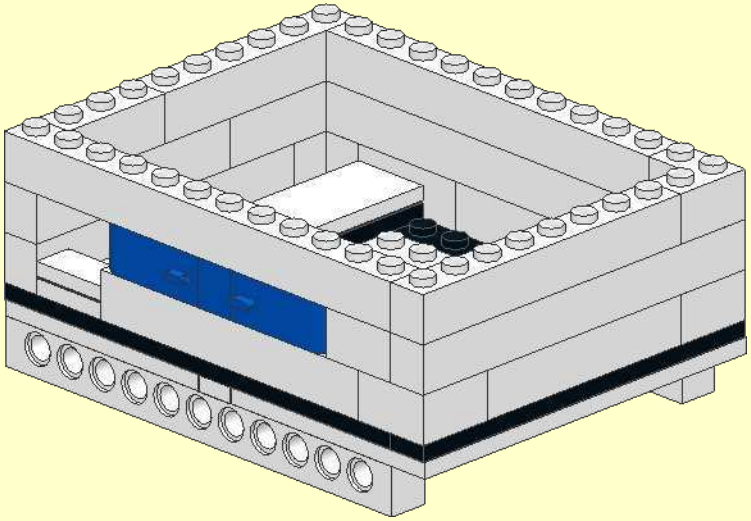

11

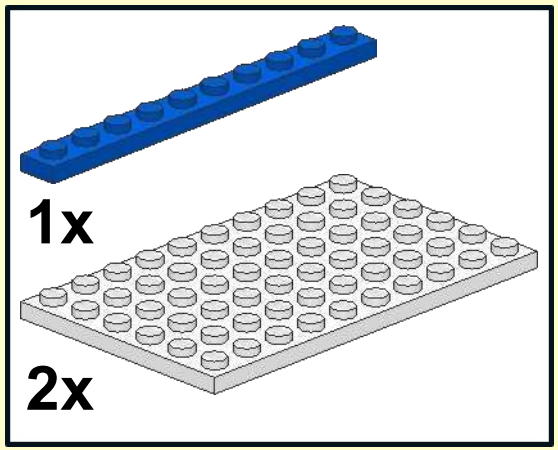

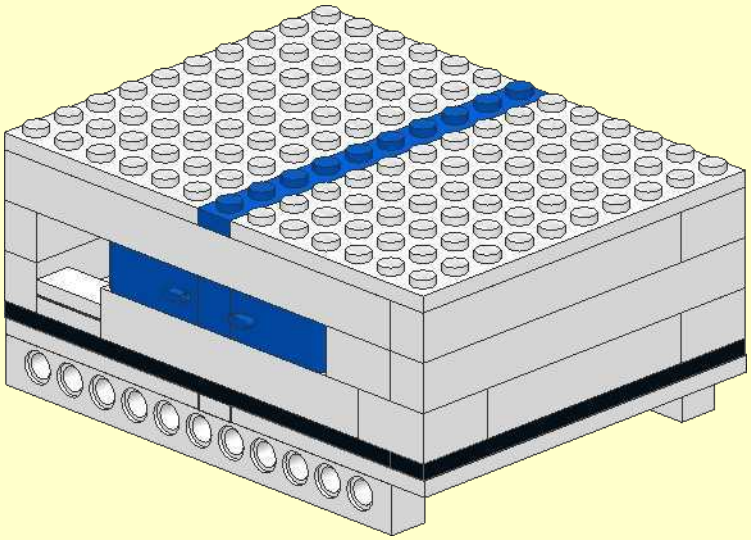

15

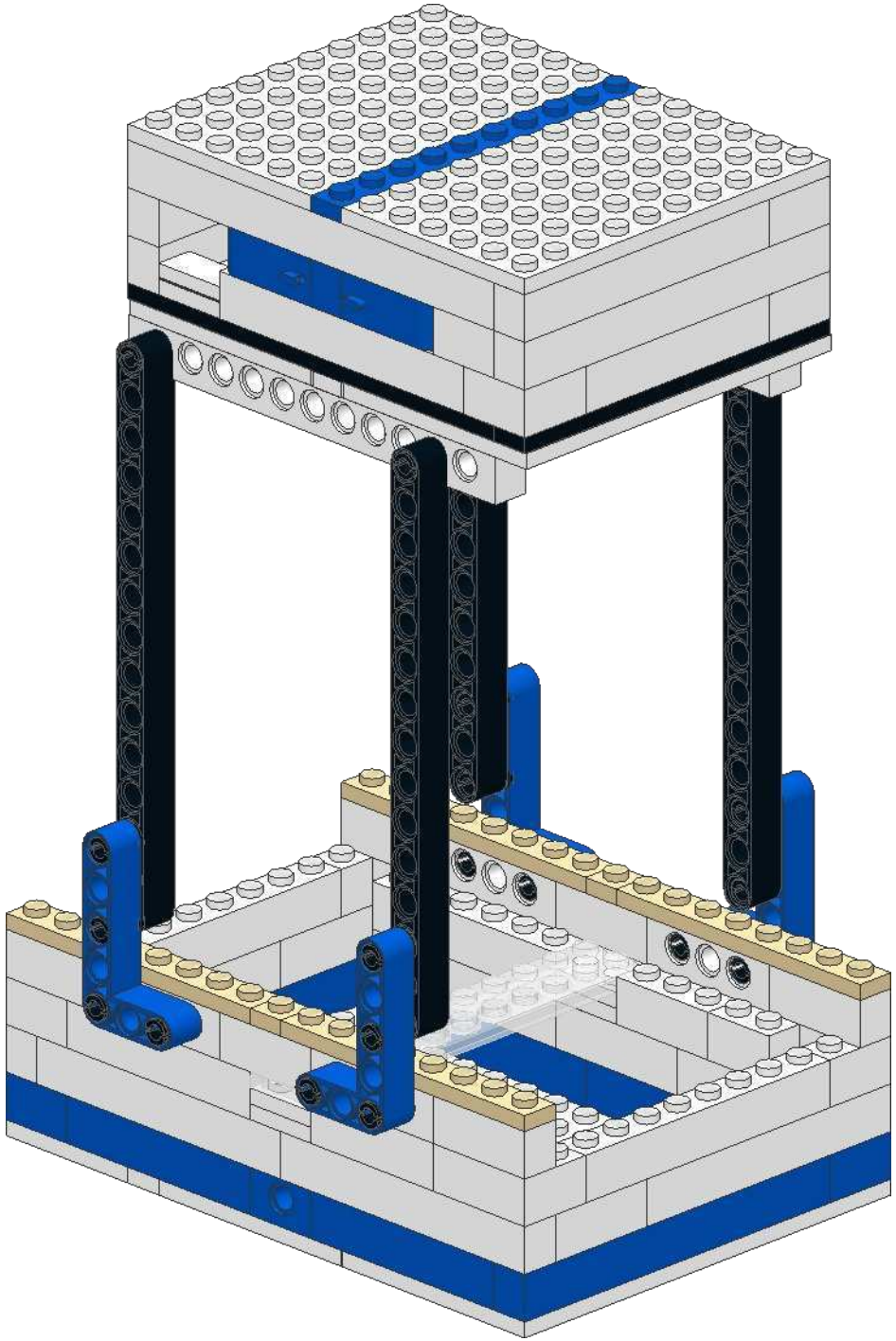

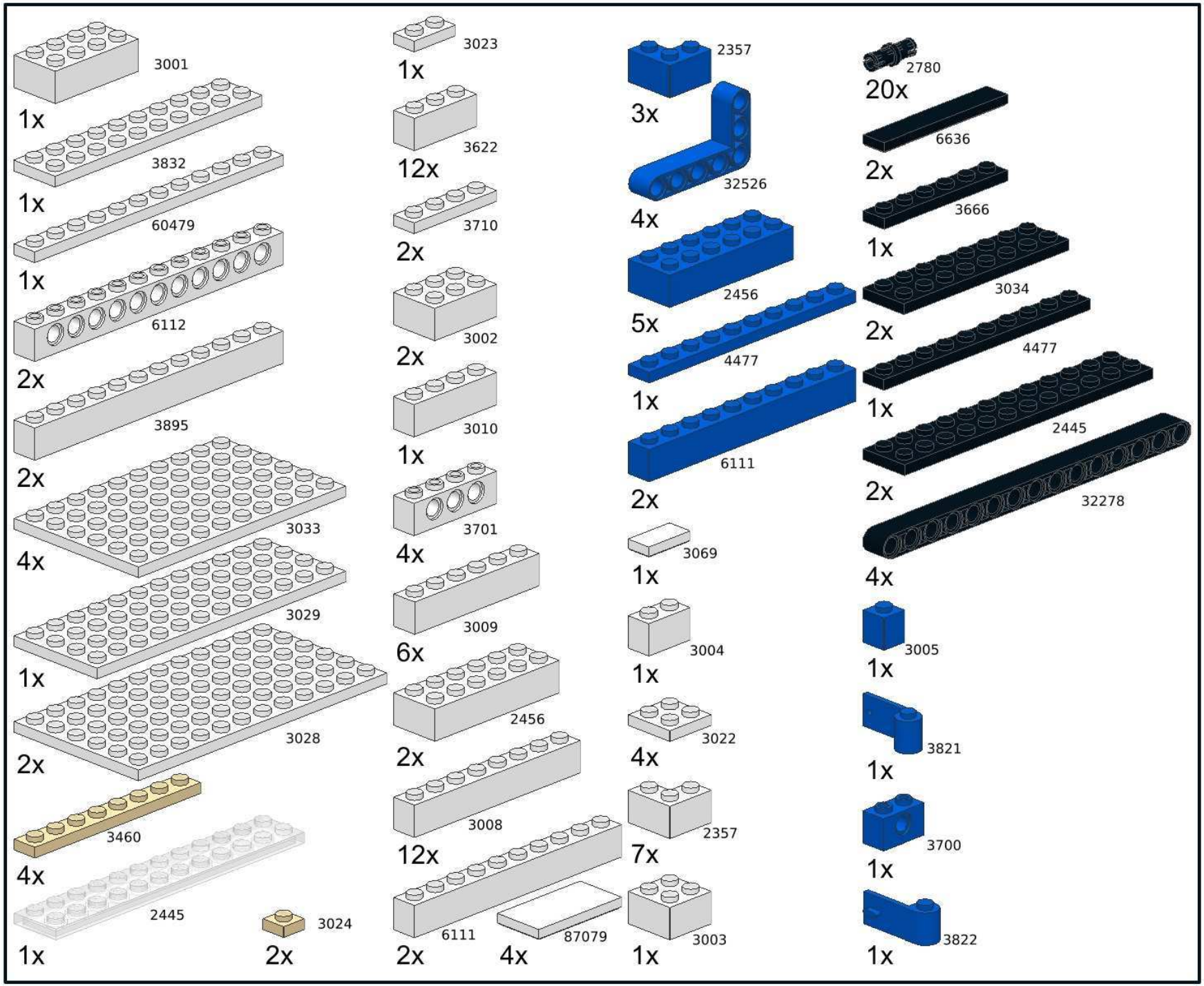
3001
1x
3832
1x
60479
1x
6112
2x
3895
2x
3033
4x
3029
1x
3028
2x
3460
4x
2445
1x
3024
2x
3023
1x
3622
12x
3710
2x
3002
2x
3010
1x
3701
4x
3009
6x
2456
2x
3008
12x
6111
2x
87079
4x
2357
3x
32526
4x
2456
5x
4477
1x
6111
2x
3069
1x
3004
1x
3022
4x
2357
7x
3003
1x
2780
20x
6636
2x
3666
1x
3034
2x
4477
1x
2445
2x
32278
4x
3005
1x
3821
1x
3700
1x
3822
1x

bioRxiv preprint doi: https://doi.org/10.1101/119647; this version posted March 27, 2017. The copyright holder for this preprint (which was not certified by peer review) is the author/funder, who has granted bioRxiv a license to display the preprint in perpetuity. It is made available under aCC-BY-NC-ND 4.0 International license.

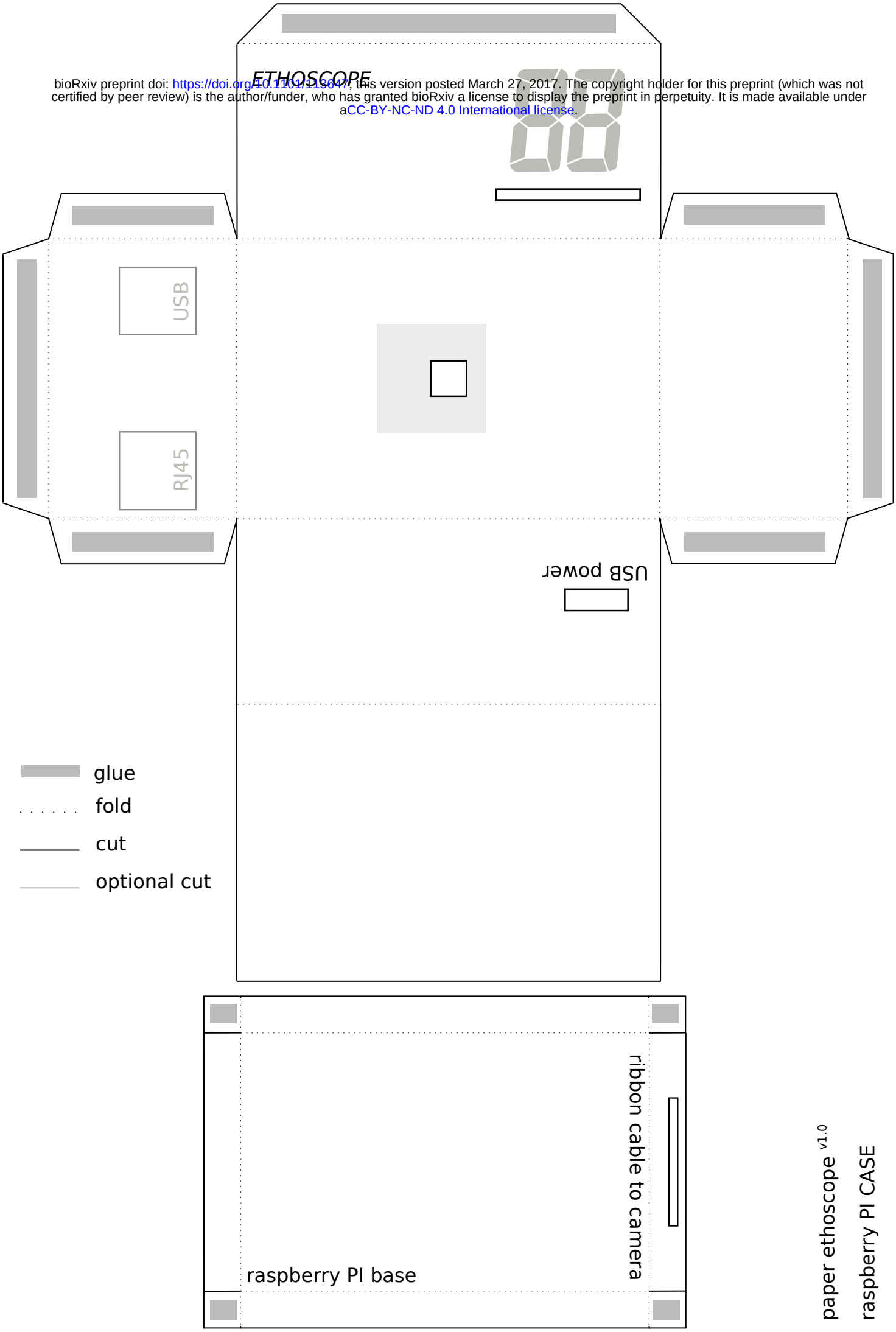

bioRxiv preprint doi: https://doi.org/10.1101/113647; this version posted March 27, 2017. The copyright holder for this preprint (which was not certified by peer review) is the author/funder, who has granted bioRxiv a license to display the preprint in perpetuity. It is made available under aCC-BY-NC-ND 4.0 International license.

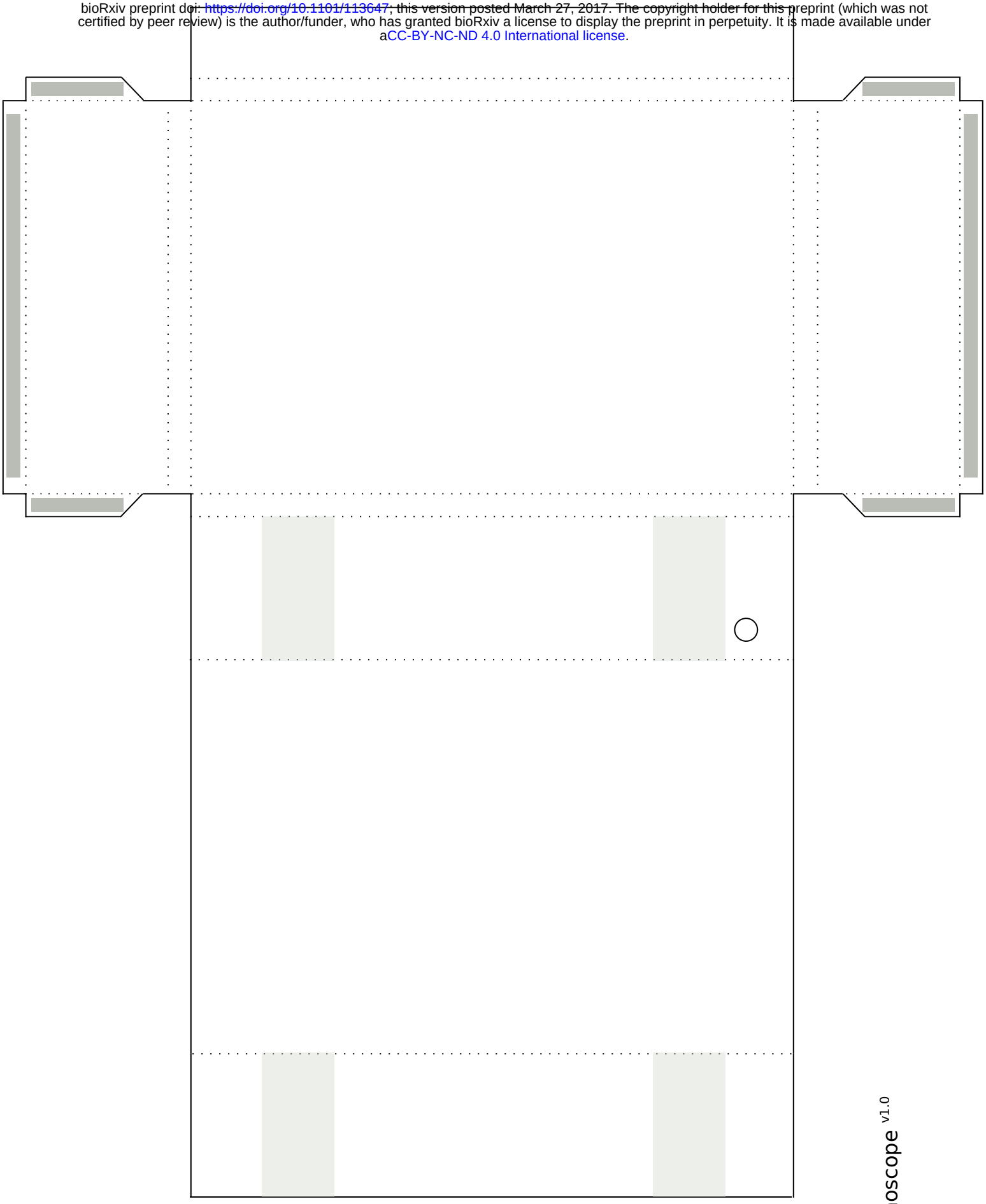

hole for IR power

guide for spacers

paper ethoscope v1.0

lightbox

Cut on cardboard,
assemble using hotglue

paper ethoscope v1.0

spacers