bioRxiv preprint doi: https://doi.org/10.1101/116160; this version posted March 15, 2017. The copyright holder for this preprint (which was not certified by peer review) is the author/funder, who has granted bioRxiv a license to display the preprint in perpetuity. It is made available under aCC-BY-NC 4.0 International license.

Optimizing Pedigrees: Using a Biasing System to Determine Likely Inheritance Systems

Justin Ang *

March 15, 2017

*Correspondence: jya005@ucsd.edu

bioRxiv preprint doi: https://doi.org/10.1101/116160; this version posted March 15, 2017. The copyright holder for this preprint (which was not certified by peer review) is the author/funder, who has granted bioRxiv a license to display the preprint in perpetuity. It is made available under aCC-BY-NC 4.0 International license.

Abstract

Pedigrees, though straightforward and versatile, lack the ability to tell us information about many individuals. Though numerical systems have been developed, there has yet to be a system that tells us the probabilities of a tree following certain inheritance systems. My system intends to do that by creating a flexible numerical system, which can then be tested for variance. My system attempts to adapt inheritance system to known pedigree data. Then, it calculates where the calculated values differ from the known pedigree data. It aggregates these values, then uses them in a chi-squared analysis in order to determine how likely the inheritance system is to match the pedigree. This is done for many different systems, until we have a good idea of what system the pedigree matches or doesn't match.

Introduction

Pedigrees are fundamentally used to represent phenotypic data in a binary system. By using 'Black' as affected and 'White' as unaffected, the pedigree system is able to cover a wide range of inheritance systems. It also gives a general idea of the dispersion of the phenotype in question. A simple improvement to this existing model would be to assign scores instead of coloring. These scores would keep track of the chance that individuals hold certain traits which can be used to easily calculate the probability of child generations. This approach has many limitations, but the idea of such an implementation is very interesting and applicable [1](Weighted-Based Statistics) (T^2 Test)[2] (M_{QLS} Test)[3]. However, using scores can also be used to determine the chance of basic inheritance systems, which I will prove. By finding the Variance between the expected value and observed values of our models, we can use a chi-squared analysis to obtain a p-value. This p-value will tell us to keep or reject the null hypothesis.

Assumptions

This model depends on several assumptions:

1. We are only looking at a two-allele, one gene system that is governed by Mendelian inheritance.
    - This model assumes that for every subsequent level the genotypes of the parents is diluted by exactly $\frac{1}{2}$. If the alleles are not separated, then there is no guarentee that these models will hold true.
2. We are only looking at: Autosomal Recessive, Autosomal Dominant, X-linked Recessive, X-linked Dominant, and Y-linked inheritance patterns.
3. There are no abnormal females and males. The individuals have normal karyotypes. (XXY, XO, XXX, etc. are not present)
4. There is **full** penetrance.

Basic Structure

Here, I will document key aspects of my representations. These are present in every implementation:

Each individual will be assigned **one** number. This number is responsible for representing the probability of affected/unaffectedness. This number will be also used to calculate offspring.

Signed numbers:
Positive (0-2) = Affected Bias (Possibly Affected)
Very Positive (1-2) = Definitely Affected
Neutral (0) = No Bias
Negative (-1-0) = Unaffected Bias (Unaffected)

bioRxiv preprint doi: https://doi.org/10.1101/116160; this version posted March 15, 2017. The copyright holder for this preprint (which was not certified by peer review) is the author/funder, who has granted bioRxiv a license to display the preprint in perpetuity. It is made available under aCC-BY-NC 4.0 International license.

Bias represents the chance of being affected. Bias will be integral in calculating the probabilities of subsequent generations inheriting alleles.

Why is the Bias unbalanced?
The bias is unbalanced because Dominant and Recessive inheritance schemes are unbalanced. Giving the same weighting system, say, {-2, 2} fails to give us a distinction between the two. By adding favoritism to the bias of Dominant traits, we ensure that the variance between Recessive and Dominant models is significant.

Level Calculations:
The biases of the parents will be summed and divided by two for every subsequent generation unless otherwise specified (X-Linked traits and Y-Linked traits). This is due to each parent only having a 50% chance of passing on their genotype under the aforementioned environment. This is essentially a Kinship Coefficient [1] calculation restricted to parents and children. *For every child, assign the biases based on the kinship Coefficient, where ψ is the sum of the two parents' biases.*

Essentially:

$$\phi = \frac{1}{2}\psi$$

ψ is the sum of the parents' biases.
ϕ is the child's bias. [1][4]

Self-Correcting: The algorithm will always prioritize data over calculations. Suppose a calculation for an individual gives us a value that is inconsistent with the known traits of the individual. We will use values based on the trait of the individual instead of the one we have calculated. This will only occur if heterozygotes are involved.

Implementation

Since I use similar concepts behind my numerical system (by coincidence), I will keep this section brief. I have attached a supplement for further reading into the rationale behind my system. However, the specifics of my numerical analysis is not the core of my argument.

Autosomal Recessive

Assign a bias factor of +1 if the individual is affected. Assign a bias factor of -1 if the individual is definitely unaffected or unknown. Assign a bias factor of 0 if the individual is a carrier. If the I generation consists of two unaffected individuals, assign them both 0 unless otherwise specified. If two unaffected individuals produce an unaffected individual, assign the individual a bias of -0.33. If the individuals produce an affected individual, assign the individual a bias of +1. For every child, assign the biases based on the kinship Coefficient, where ψ is the sum of the two parents' biases.

Autosomal Dominant

Assign a bias factor of +2 if the individual is fully affected. Assign a bias factor of 0 if the individual is unaffected. Assign a bias factor of +1 if the individual is unknown or a Heterozygote. If the I generation consists of affected individuals, assign them all +1 unless otherwise specified. If two unaffected individuals produce an unaffected individual, assign the individual a bias of -1. If the individuals produce an affected individual, assign the individual a bias of +1.33.

X-Linked Recessive

Assign a bias factor of +1 if the individual is affected. Assign a bias factor of 0 if the individual is a **female** carrier. Assign a bias factor of -1 if the individual is unaffected or unknown. **Males will have their mother's bias**, instead of calculating the Kinship Coefficient. If the I generation consists of affected individuals, assign them all 1 unless otherwise specified. If two carrier individuals produce an unaffected

bioRxiv preprint doi: https://doi.org/10.1101/116160; this version posted March 15, 2017. The copyright holder for this preprint (which was not certified by peer review) is the author/funder, who has granted bioRxiv a license to display the preprint in perpetuity. It is made available under aCC-BY-NC 4.0 International license.

female, assign the female a bias of -0.5. If the individuals produce an affected **female**, assign the individual a bias of +1.

X-Linked Recessive

Assign a bias factor of +2 if the individual is fully affected. Assign a bias factor of 1 if the individual is a **female** heterozygote. Assign a bias factor of 0 if the individual is unaffected. **Males will have their mother's bias**, instead of calculating the Kinship Coefficient. If the I generation consists of affected individuals, assign them all +1 unless otherwise specified. If two heterozygous individuals produce an unaffected **female**, assign the female a bias of 0. If the individuals produce an affected **female**, assign the individual a bias of +1.5.

Y-Linked Recessive

Assign a bias factor of +2 if the individual is male and affected. In the impossible case where a female is affected or a carrier, assign it a bias of ∞. Assign a bias factor of 0 to unaffected males, and all other females. **Males will have their father's bias**. None of the individuals will follow the Kinship Coefficient model in this inheritance scheme.

Using Models to Determine Inheritance System

The aforementioned models can be used to determine the inheritance type of an unknown pedigree. The method for doing so is as follows:

1. Attempt to fit each model to the given tree. Most models will not fit. In that case find the model that is the **closest** to the given tree. Closeness is defined as minimizing the difference between the calculated bias and the bias that the individual actually has.
2. Test the sum of the bias of individuals in a set of parents minus the expected bias as calculated from the set of parents.
3. Sum the absolute value of these differences for every set of parents after the I generation.
4. If we happen to cross a set of parents where the expected bias of the parents conflicts with the one we observe, assign the observed bias instead of the calculated one.
5. Multiply this sum by the number of average children. This is our variance.
6. Test these variance values against a chi-square analysis. Our Degrees of Freedom will be the number of individuals we examine minus 1.
7. If we are given information about heterozygotes, we assume unaffected and affected individuals to be homozygotes.
8. If the difference between the calculated bias and the observed bias is greater than 1, multiply it by 1.5, or the 'unlikely' weight.

$$(\frac{1}{l}\sum_{n=1}^{l} i)\sum_{n=1}^{l}|\sum_{k=1}^{i} U(\delta_k - \phi_k|)$$

l is the number of parents.
i is the number of individuals with parent l.
δ_k is the bias of individual k calculated from our model.
ϕ_k is the bias of individual k calculated from its parents.
U is the unlikely function. If the difference exceeds 1, U will multiply the difference by 1.5.

Null hypothesis: There is no significant difference between the data observed and the data expected. Therefore the proposed model is accurate with respect to our data. Assume p = 0.05 [5] for us to be able to reject the null hypothesis.

bioRxiv preprint doi: https://doi.org/10.1101/116160; this version posted March 15, 2017. The copyright holder for this preprint (which was not certified by peer review) is the author/funder, who has granted bioRxiv a license to display the preprint in perpetuity. It is made available under aCC-BY-NC 4.0 International license.

The reasoning for this system is explained in the "Further Explanation of Variance", on page 13. I will now proceed to analyze a few pedigrees. For the sake of simplicity, the models will not have shading.

Reading the Figures: The figures represent the expected bias from the given inheritance system. In some figures, there are numbers next to individuals. That number respresents the calculated bias from its parents. The number in the individual is the number we use to calculate the bias of the next level.

Example 1 (Autosomal Recessive):

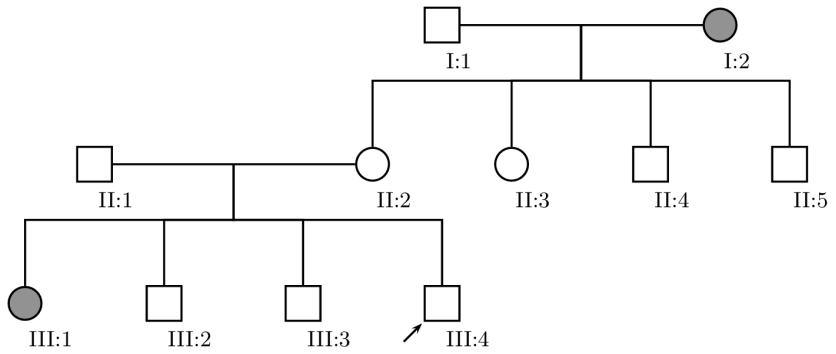

Autosomal Recessive Bias:

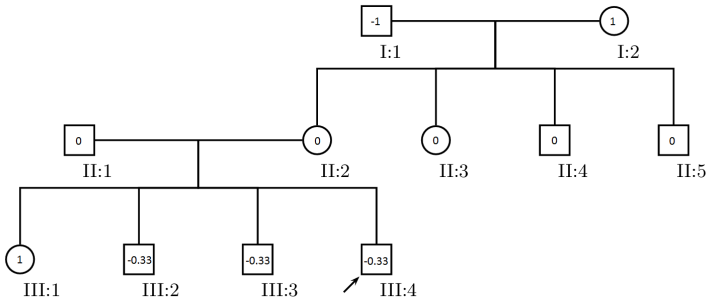

Expected Bias from I Parents to II children: $\frac{1-1}{2} = 0$
Bias from II children (II-2, II-3, II-4, II-5): (0-0) + (0-0) + (0-0) + (0-0) = 0
Expected Bias from (II-1, II-2) Parents to III children: $\frac{0+0}{2} = 0$
Bias from III children (III-1, III-2, III-3, III-4): (1-0) + (-0.33-0) + (-0.33-0) + (-0.33-0) = 0
Total Bias from all levels: $|0| + |0| = 0$
Final Variance: 0 * 4 = 0

Autosomal Dominant Bias:

bioRxiv preprint doi: https://doi.org/10.1101/116160; this version posted March 15, 2017. The copyright holder for this preprint (which was not certified by peer review) is the author/funder, who has granted bioRxiv a license to display the preprint in perpetuity. It is made available under aCC-BY-NC 4.0 International license.

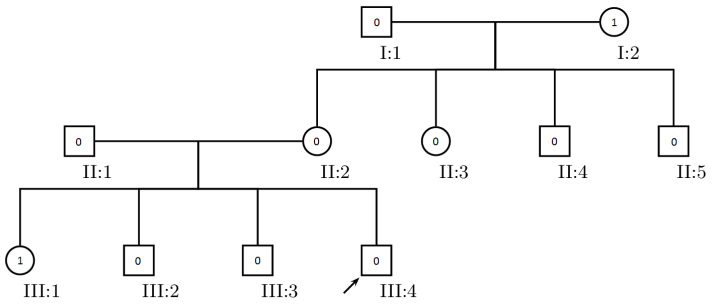

Expected Bias from I Parents to II children: $\frac{1+0}{2} = 0.5$
Bias from II children (II-2, II-3, II-4, II-5): (0-0.5) + (0-0.5) + (0-0.5) + (0-0.5) = -2
Expected Bias from (II-1, II-2) Parents to III children: $\frac{0+0}{2} = 0$
Bias from III children (III-1, III-2, III-3, III-4): (1-0) + (0-0) + (0-0) + (0-0) = 1
Total Bias from all levels: $|-2| + |1| = 3$
Final Variance: 3 * 4 = 12

X-Linked Recessive Bias:

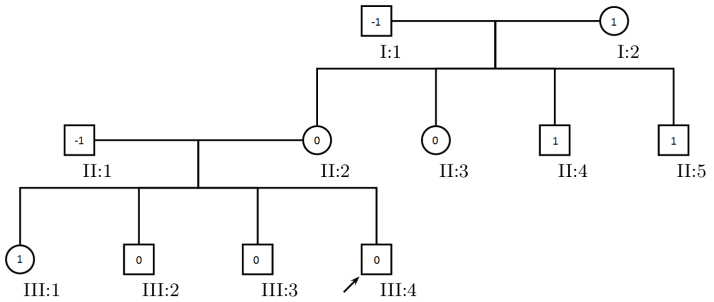

Expected Bias from I Parents to II children: ♂= 1, ♀= $\frac{-1+1}{2} = 0$
Bias from II children (II-2, II-3, II-4, II-5): (0-0) + (0-0) + (1-1) + (1-1) = 0
Expected Bias from (II-1, II-2) Parents to III children: ♂= 0, ♀= $\frac{0-1}{2}$ = -0.5
Bias from III children (III-1, III-2, III-3, III-4): (1-(-0.5))*1.5 + (0-0) + (0-0) + (0-0) = 2.25
Total Bias from all levels: $|0| + |2.25| = 2.25$
Final Variance: 2.25 * 4 = 9

X-Linked Dominant Bias:

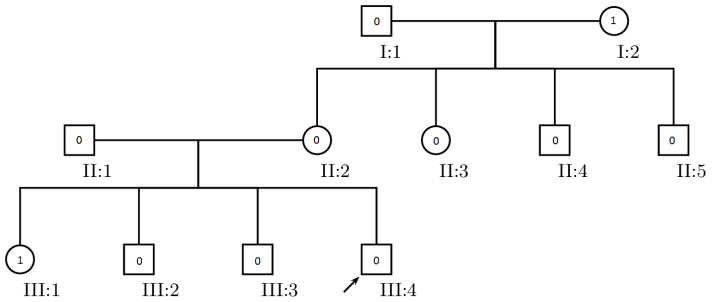

Expected Bias from I Parents to II children: ♂= 1, ♀= $\frac{0+1}{2} = 0.5$

bioRxiv preprint doi: https://doi.org/10.1101/116160; this version posted March 15, 2017. The copyright holder for this preprint (which was not certified by peer review) is the author/funder, who has granted bioRxiv a license to display the preprint in perpetuity. It is made available under aCC-BY-NC 4.0 International license.

Bias from II children (II-2, II-3, II-4, II-5): (0-0.5) + (0-0.5) + (0-1) + (0-1) = -3
Expected Bias from (II-1, II-2) Parents to III children: ♂= 0, ♀= $\frac{0+0}{2}$ = 0
Bias from III children (III-1, III-2, III-3, III-4): (1-0) + (0-0) + (0-0) + (0-0) = 1
Total Bias from all levels: $|-3| + |1| = 4$
Final Variance: 4 * 4 = 16

Y-Linked Bias:

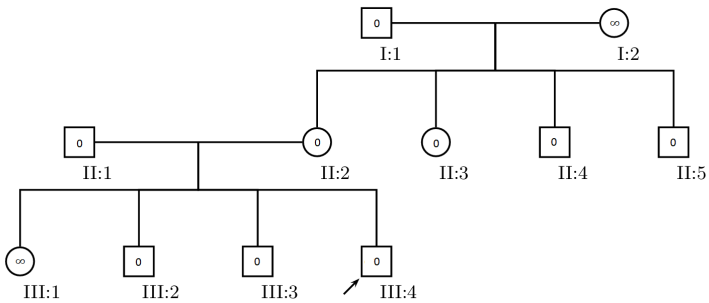

Expected Bias from I Parents to II children: ♂= 0, ♀= 0
Bias from II children (II-2, II-3, II-4, II-5): (0-0) + (0-0) + (0-0) + (0-0) = 0
Expected Bias from (II-1, II-2) Parents to III children: ♂= 0, ♀= $\frac{0+0}{2}$ = 0
Bias from III children (III-1, III-2, III-3, III-4): (∞-0) + (0-0) + (0-0) + (0-0) = ∞
Total Bias from all levels: $|0| + |\infty| = \infty$
Final Variance: ∞ * 4 = ∞

After our calculations, we have the corresponding values for Autosomal Recessive, Autosomal Dominant, X-Linked Recessive, X-Linked Dominant, and Y-Linked: 0, 12, 9, 16, ∞. Now, let's apply these values to a Chi-Square Distribution. Since we examined 8 individuals, (II-2, II-3, II-4, II-5, III-1, III-2, III-3, and III-4), our degree of freedom is 8-1 = 7.

Inheritance Pattern	X^2 Value	p-value	Probable?
Autosomal Recessive	0	1	yes
Autosomal Dominant	12	0.101	yes
X-Linked Recessive	9	0.253	yes
X-Linked Dominant	16	0.025	no
Y-Linked	∞	0	no

From this distribution, we can see that Autosomal Recessive, X-Linked Recessive and Autosomal Dominant are models that fail to reject the null hypothesis. However, Autosomal Recessive has a much higher confidence when applied to this pedigree. Autosomal Dominant and X-Linked Recessive should, in theory, be impossible. An affected female cannot be born from an unaffected male and unaffected female, as they will always get a working allele from their father. Likewise, two unaffected parents should not be able to produce an affected individual under Autosomal Dominant. However, this model accounts for error in results. It is not meant to give us a definite answer on the inheritance system. It merely gives us the chance of systems matching up. Our rejection of Autosomal Dominant and X-Linked Dominant inheritance schemes matches what the pedigree shows us. It is impossible for dominant phenotypes to manifest themselves from two unaffected parents (II-1, II-2 producing affected III-3). Additionally, Y-linked traits cannot be expressed by females, yet affected females are present in our pedigree. Therefore, this pedigree is not Y-Linked. My chi-squared test confirms this.

Another reason why impossible systems are still included is due to the small sample size. If we were to have more individuals, then our system will deduce with more certainty if a model fits. [5]

bioRxiv preprint doi: https://doi.org/10.1101/116160; this version posted March 15, 2017. The copyright holder for this preprint (which was not certified by peer review) is the author/funder, who has granted bioRxiv a license to display the preprint in perpetuity. It is made available under aCC-BY-NC 4.0 International license.

Now, I will use a simpler example to prove that this method is accurate. Assume we know nothing but the phenotypes.

Example 2 (Y-Linked, Chance of Autosomal Dominant) :

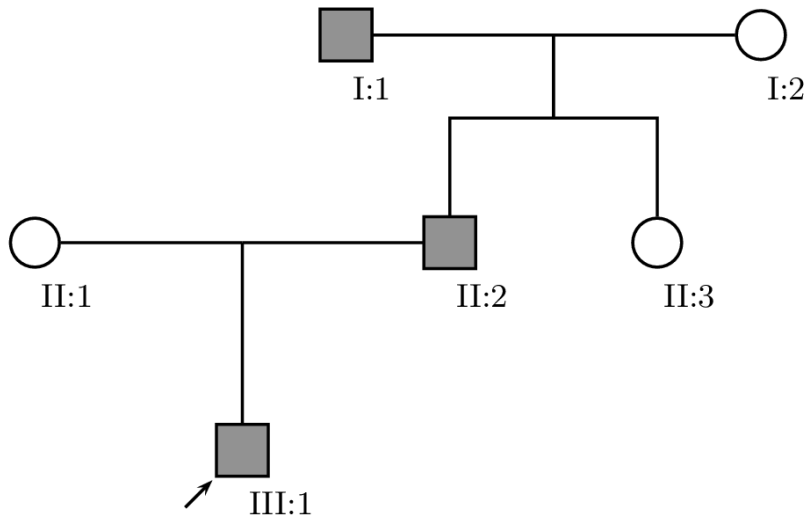

Autosomal Recessive Bias:

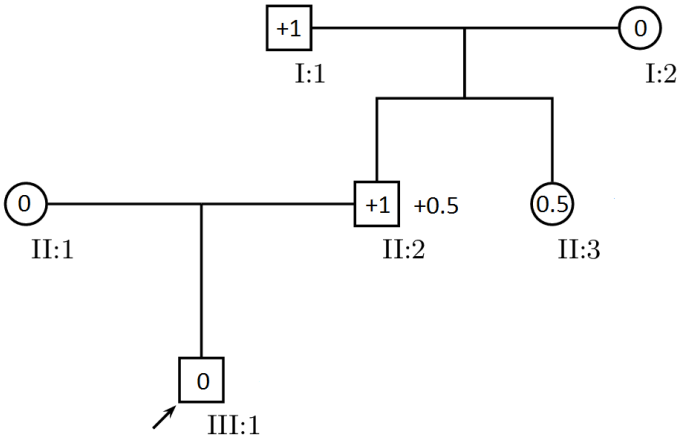

Expected Bias from I Parents to II children: $\frac{1-0}{2} = 0.5$
Bias from II children (II-2, II-3): (1-0.5) + (0-0.5) = 0
Expected Bias from II Parents to III children: $\frac{1+0}{2} = 0.5$
Bias from III children (III-1): (0-1.5) = -0.5
Total Bias from all levels: $|0| + |-0.5| = 0.5$
Final Variance: 0.5 * 1.5 = 0.75

bioRxiv preprint doi: https://doi.org/10.1101/116160; this version posted March 15, 2017. The copyright holder for this preprint (which was not certified by peer review) is the author/funder, who has granted bioRxiv a license to display the preprint in perpetuity. It is made available under aCC-BY-NC 4.0 International license.

Autosomal Dominant Bias:

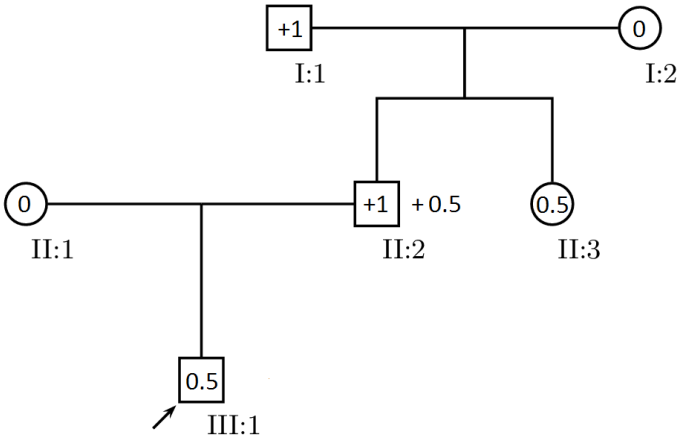

Expected Bias from I Parents to II children: $\frac{1+0}{2} = 0.5$
Bias from II children (II-2, II-3): (1-0.5) + (0-0.5) = 0
Expected Bias from II Parents to III children: $\frac{1+0}{2} = 0.5$
Bias from III children (III-1): (1-0.5) = -0.5
Total Bias from all levels: $|0| + |-0.75| = 0.75$
Final Variance: 0.5 * 1.5 = 0.75

X-Linked Recessive Bias:

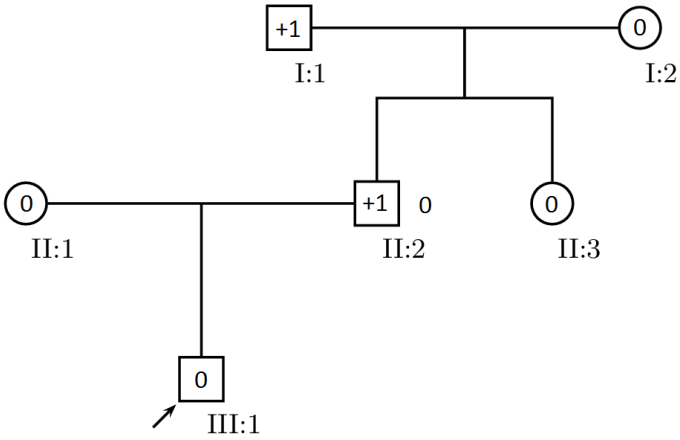

Expected Bias from I Parents to II children: ♂= 0, ♀= $\frac{0+1}{2} = 0.5$
Bias from II children (II-2, II-3): (1-0) + (0-0) = 1
Expected Bias from II Parents to III children: ♂= 0, ♀= $\frac{0+1}{2} = 0.5$
Bias from III children (III-1): (1-0) = 1
Total Bias from all levels: $|1| + |1| = 2$
Final Variance: 2 * 1.5 = 3

bioRxiv preprint doi: https://doi.org/10.1101/116160; this version posted March 15, 2017. The copyright holder for this preprint (which was not certified by peer review) is the author/funder, who has granted bioRxiv a license to display the preprint in perpetuity. It is made available under aCC-BY-NC 4.0 International license.

X-Linked Dominant Bias:

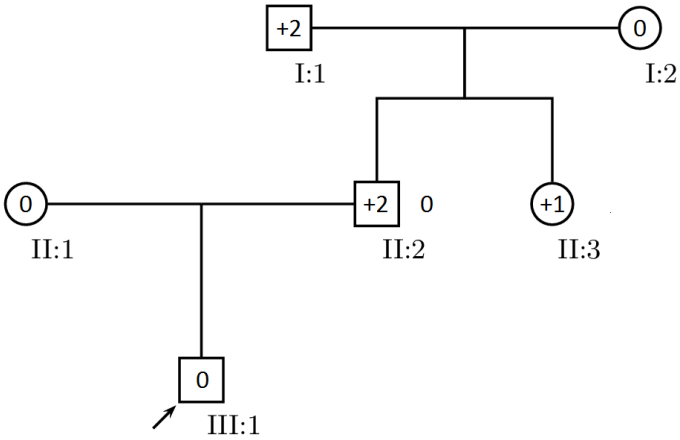

Expected Bias from I Parents to II children: ♂= 0, ♀= $\frac{2+0}{2}$ = 1
Bias from II children (II-2, II-3): (2-0)*1.5 + (0-1) = 3
Expected Bias from II Parents to III children: ♂= 0, ♀= $\frac{2+0}{2}$ = 1
Bias from III children (III-1): (2-0)*1.5 + (0-1) = 3
Total Bias from all levels: |3| + |3| = 6
Final Variance: 6 * 1.5 = 9

Y-Linked Bias:

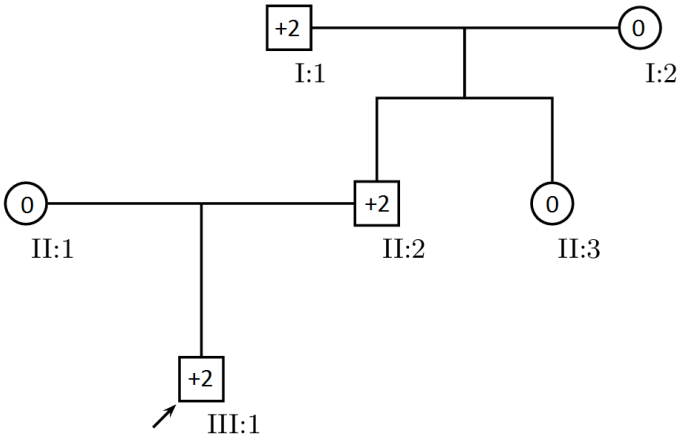

Expected Bias from I Parents to II children: ♂= 2, ♀= 0
Bias from II children (II-2, II-3): (2-2) + (0-0) = 0
Expected Bias from II Parents to III children: ♂= 2, ♀= 0
Bias from III children (III-1): (2-2) = 0
Total Bias from all levels: |0| + |0| = 0
Final Variance: 0 * 1.5 = 0

After our calculations, we have the corresponding values for Autosomal Recessive, Autosomal Dominant, X-Linked Recessive, X-Linked Dominant, and Y-Linked: 6, 1.5, 12, 6, 0. Now, apply these values to a Chi-Square Distribution. Since we examined 3 individuals, (II-2, II-3 and III-I), our degree of freedom is 3-1 = 2.

bioRxiv preprint doi: https://doi.org/10.1101/116160; this version posted March 15, 2017. The copyright holder for this preprint (which was not certified by peer review) is the author/funder, who has granted bioRxiv a license to display the preprint in perpetuity. It is made available under aCC-BY-NC 4.0 International license.

Inheritance Pattern	X^2 Value	p-value	Probable?
Autosomal Recessive	0.75	0.687	yes
Autosomal Dominant	0.75	0.687	yes
X-Linked Recessive	3	0.223	yes
X-Linked Dominant	9	0.011	no
Y-Linked	0	1	yes

Our results say that the Y-Linked, Autosomal Dominant, Autosomal Recessive and X-Linked Recessive inheritance systems are probable, with Y-Linked and Autosomal systems being much more likely. Though it may seem counter-intuitive, I did this example to illustrate a point. When we were generation models for this system, we used the self-correcting property because we did not know the alleleic frequencies of some individuals. This allowed us to generate accurate models for Autosomal Systems in addition to the Y-Linked system. By allowing our algorithm to strategically assign heterozygotes, we were able to maximize the probability that a model might fit. For an unknown pedigree, this property is very important for generating an best fit model.

However, Y-Linked is more probably because the Autosomal and X-Linked systems depend on chance to achieve the pedigree above. For example, in the Autosomal Dominant inheritance scheme, it is possible for I-1 to pass it's dominant allele to II-2, then II-2 to pass that dominant allele to III-1. However, this is much less likely since there is a chance that the male may inherit the unaffected allele from their mother. Since this must happen twice (I generation and II generation), those inhertance systems are less likely.

Finally, I will use a complicated example utilizing the history of Hemophilia in the royal family[6]. The data I am using is pulled from Hugo Iltis' paper, "Hemophilia, 'The Royal Disease'". This data is inherently flawed. However, I seek to show that my model is still finds the best fit.

Example 3 (X-Linked Recessive):

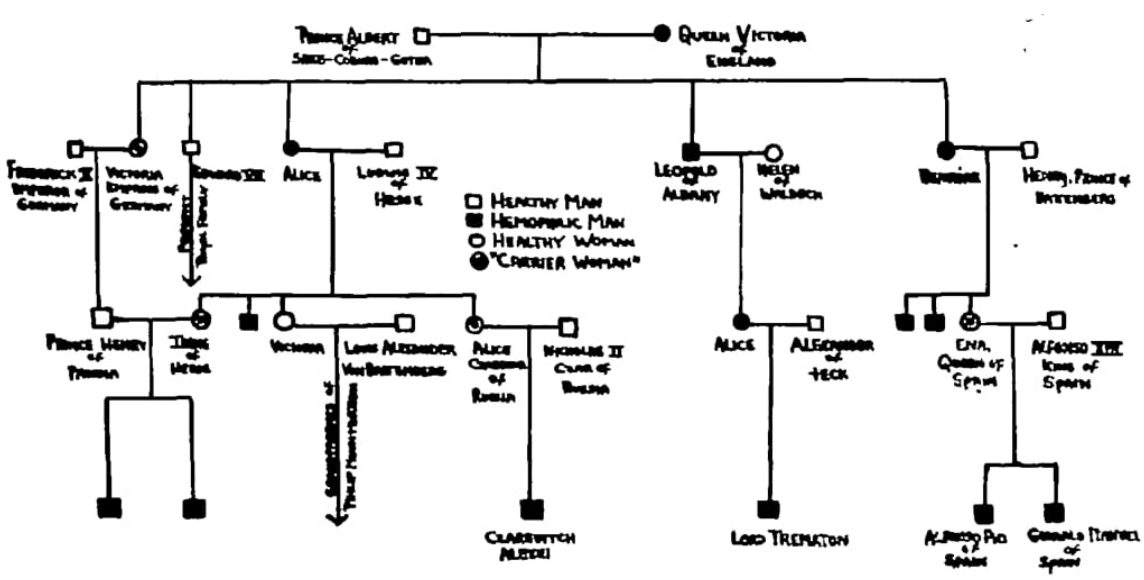

Let:

α be Autosomal Recessive
β be X-Linked Recessive
γ be Autosomal Dominant
δ be X-Linked Dominant
ϵ be Y-Linked
Δ to be $\delta_k - \phi_k$, the difference between expected and observed for an individual.
Best for Individual - Smallest variance for individual.

bioRxiv preprint doi: https://doi.org/10.1101/116160; this version posted March 15, 2017. The copyright holder for this preprint (which was not certified by peer review) is the author/funder, who has granted bioRxiv a license to display the preprint in perpetuity. It is made available under aCC-BY-NC 4.0 International license.

Best So Far - Smallest total variance up to the individual.

Individual	$\Delta\alpha$	$\Delta\beta$	$\Delta\gamma$	$\Delta\delta$	$\Delta\epsilon$	Best for Individual	Best So Far
I1/I2							
II-2	0	0	0	0	∞	α & β & γ & δ	α & β & γ & δ
II-3	0	3	1	3	∞	α	α
II-4	-1	-1	-1	1	∞	α & β & γ & δ	γ
II-6	-1	0	-1	0	-3	β & δ	γ
II-8	-1	-1	-1	1	∞	α & β & γ & δ	β
II1/II2							
III-1	0.5	1	0	1	0	γ & ϵ	β
II4/II5							
III-2	0	0	0	0	∞	α & β & γ & δ	β
III-3	-1	0	-1	0	-3	β & δ	β
III-4	1	-1	1	1	∞	α & β & γ & δ	β
III-6	0	0	0	0	∞	α & β & γ & δ	β
II6/II7							
III-8	-0.5	-0.5	-1	-1	∞	α & β	β
II8/II9							
III-10	-0.5	0	-1	0	-2	β & δ	β
III-11	-0.5	0	-1	0	-2	β & δ	β
III-12	0.5	0	0	0	∞	β & γ & δ	β
III1/III2							
IV-1	-2.25	-1	-2.25	-1	-3	β & δ	β
IV-2	-2.25	-1	-2.25	-1	-3	β & δ	β
III6/III7							
IV-3	-2.25	-1	-2.25	-1	-3	β & δ	β
III8/III9							
IV-4	-1	0	-1	0	-3	β & δ	β
III12/III13							
IV-5	-2.25	-1	-2.25	-1	-3	β & δ	β
IV-6	-2.25	-1	-2.25	-1	-3	β & δ	β
Sum	17.75	8.5	18.25	13	∞		β

Degrees of Freedom = 20-1 = 19
Average Family Size = $\frac{20}{9}$ = 2.22

Inheritance Pattern	X^2 Value	p-value	Probable?
Autosomal Recessive	39.444	0.004	no
X-Linked Recessive	18.889	0.465	yes
Autosomal Dominant	40.622	0.003	no
X-Linked Dominant	28.889	0.068	yes
Y-Linked	∞	0	no

Analysis :
We can say with 46.5% certainty that this pedigree is X-Linked Recessive. We can also say with %6.8 percent certainty that this pedigree is X-Linked Dominant. Autosomal Recessive, Autosomal Dominant, and Y-Linked are not probable.

From our "Best so Far" column, we can track how each inheritance system rates as we add more data. Generation II has many problems. Since the inhertiance for Hemophilia is X-Linked Recessive, a cross between an affected female and unaffected male should produce all carrier females and all affected males. However, we can already see this break down in generation II. For example, take II-4 or II-8. These are affected females, which must have received two copies of the affected allele. [6] However, since the father is

bioRxiv preprint doi: https://doi.org/10.1101/116160; this version posted March 15, 2017. The copyright holder for this preprint (which was not certified by peer review) is the author/funder, who has granted bioRxiv a license to display the preprint in perpetuity. It is made available under aCC-BY-NC 4.0 International license.

unaffected, he can't possibly pass an affected allele. Therefore, Autosomal Dominant becomes more probable for a brief moment. If the system were Autosomal Dominant, the mother has a chance of passing the affected allele to her daughters, causing them to be affected. However, as we continue to add more data, it is clear that X-Linked Recessive is the prevalent system. From the table, we can see that this algorithm was able to identify that generation IV was X-Linked. Smaller values were assigned to X-Linked inheritance systems for generation IV, meaning that, for those individuals, the X-Linked inheritance systems are more accurate.

Further Explanation of Variance

The variance calculation is as follows:

1. Generate models for all 5 inheritance systems.
2. Find the difference between expected value and observed value for children.
3. Sum all the children from a set of parents.
4. Sum the absolute value of all the sets of children.
5. Multiply sum by the average number of children per parent.
6. Compare to p-value. Degrees of freedom is the number of individuals minus one.
7. If we are given information about heterozygotes, we assume unaffected and affected individuals to be homozygotes.
8. Multiply by 1.5 if the difference in biases exceeds 1.

Explanation:

1. We must generate models to obtain our variance. Different models will create different expected values which will in turn create different variance.

2. In order to find our variance, we need to find the bias we expect, minus the bias we are getting.

3. The variance is based on **parent sets**. Our calculation from two parents will give us the expected bias of all the children. In order to find the variance of a parent set, we must sum the individual variances of the children. If we only take the variance of one child without accounting for the other children, the variance will not be accurate.

We sum the absolute value of the variances generated from parents because the calculations of parents and children are **separate** from one another. By doing the calculation in this manner, we avoid the mistake of aggregating errors. For example, if a pedigree appears to be Autosomal Dominant for the first generation, yet it is clear from the rest of the graph that the pedigree is Autosomal Recessive, calculating each set of parents will give us the correct inheritance type.

4. We would like to find the aggregate of the variances.

5. The variance is not scaled correctly. Reoccurring variance in a large family with the same parents should be weighted heavily. Reoccuring variance in a small family is more likely to be due to random chance.

6. The range of factors (individuals) increases as we increase our sample size. Therefore, our Degrees of freedom will rise as we look at more individuals.

7. If we know all the heterozygotes, we do not need to self-correct.

8. If an individual violates the properties of our inheritance systems, we want to weigh against it more.

Benefits

Calculations for individuals can be made much quicker than a standard pedigree by simplifying the pedigree into numbers. In calculating biases at the bottom of the trees, the calculation only needs the

bioRxiv preprint doi: https://doi.org/10.1101/116160; this version posted March 15, 2017. The copyright holder for this preprint (which was not certified by peer review) is the author/funder, who has granted bioRxiv a license to display the preprint in perpetuity. It is made available under aCC-BY-NC 4.0 International license.

biases of the parents, and, if Self-Correcting is needed, those of the siblings. This drastically improves runtime in large pedigrees. For example, let us have a pedigree of depth D with N individuals in the last generation. If we want to calculate the probability that those N individuals will have affected/unaffected children, we must trace all the way up in the worst case. This results in O(nd) calculations. However, in my implementation, only the parents and siblings are needed in the worst case. This reduces the number of calculations to O(2n). Let search refer to finding the chance of an individual being affected, and insert be the probability of an individual having an affected child (genotype of mate is known).

Run time Costs:

	Worst Case Search	Best Case Search	Worst Case Insert	Best Case Insert
Standard Pedigree	O(d)	O(1)	O(d)	O(1)
Improved Pedigree	O(2)	O(1)	O(2)	O(1)

The improved system also includes information that may not be present. For example, let us suppose we have an Autosomal Recessive disease, and one grandparent who is affected and one who is not. Suppose that we know the mother of an individual is an outsider who mates with a son of the grandparents. However, we know nothing of the father's generation or even about the father himself. Under this system, we would still know that the father is definitely a carrier. Though this example may seem trivial, consider the case where we do not know generation 4 of a 16 generation pedigree. This implementation will still track the contribution of generation 4 to the pedigree's descendants which is incredibly useful.

Finally, this model allows us to calculate the probability that certain inheritance systems are present. This model is flexible, and allows us to know if there is a possibility of multiple inheritance systems instead of trying to pick one. It also accounts for ambiguity in heterozygotes and factors this into its calculations for inheritance systems. This is potentially useful if we are analyzing purely phenotypic data.

Limitations

As I developed these algorithms theoretically, they have many foreseeable limitations.

First and foremost are the assumptions I make. There is no guarantee that outsiders will be what I assume them to be (Unaffected are Homozygous Dominant in Autosomal Recessive scheme, Affected are Heterozygous in Autosomal Dominant scheme, etc...). Every time that the assumption is wrong, the algorithm must back track and rectify the mistake (Self-Correcting property). Secondly, there is no distinction between having two Heterozygotes as parents versus a Homozygous Dominant and Homozygous Recessive. Though the allelic frequencies are equal, the two sets of parents have different effects.If a disease is Autosomal Recessive, and two carriers have a child, there is a 25% chance the child being affected. If a Homozygous Dominant and Homozygous Recessive couple have a child, it will always be unaffected. My system does not account for this. Additionally, my models do not account for Non-Mendelian traits, nor traits that are linked to other traits. Using these models to determine inheritance is also inefficient. I have not implemented a threshold to stop tracking inheritance systems, but that is a possible improvement.

Acknowledgements

I would like to thank Nathaniel Johnson for his statistics distribution website. This was key for analyzing the variance I obtained from my calculations. I would also like to thank Boris Veytsman and Leila Akhmadeeva for their online pedigree tool. This tool was both useful and highly beautiful, and I'm not sure if I could have undertaken this project without it. Finally, I would like to thank David Dinata for helping me structure this paper.

bioRxiv preprint doi: https://doi.org/10.1101/116160; this version posted March 15, 2017. The copyright holder for this preprint (which was not certified by peer review) is the author/funder, who has granted bioRxiv a license to display the preprint in perpetuity. It is made available under aCC-BY-NC 4.0 International license.

References

1. Shugart, Yin Yao, Yun Zhu, Wei Guo, and Momiao Xiong. :Weighted Pedigree-based Statistics for Testing the Association of Rare Variants. BMC Genomics 13.1 (2012): 667. Web.

2. Xiong M, Zhao J, Boerwinkle E: Generalized T2 test for genome association studies. Am J Hum Genet. 2002, 70: 1257-1268. 10.1086/340392.

3. Thornton T, McPeek MS: Case–control association testing with related individuals: a more powerful quasi-likelihood score test. Am J Hum Genet. 2007, 81: 321-337. 10.1086/519497.

4. Thornton T, McPeek MS: Roadtrips: Case–control association testing with partially or completely unknown population and pedigree structure. Am J Hum Genet. 2010, 86: 172-184. 10.1016/j.ajhg.2010.01.001.

5. Silva-Ayçaguer, Luis Carlos, Patricio Suárez-Gil, and Ana Fernández-Somoano. The Null Hypothesis Significance Test in Health Sciences Research (1995-2006): Statistical Analysis and Interpretation. BMC Medical Research Methodology. BioMed Central, 19 May 2010. Web. 14 Mar. 2017.

6. Iltis, Hugo. Hemophilia, "The Royal Disease". Journal of Heredity 39.4 (1948): 113-16. Web.