Mitochondrial genome variation affects the mutation rate of the nuclear genome in *Drosophila melanogaster*

Jonci N. Wolff[1,2*], M. Florencia Camus[2,3], Damian K. Dowling[2], Björn Rogell[1*]

[1] Department of Zoology, Stockholm University, 106 91 Stockholm, Sweden

[2] School of Biological Sciences, Monash University, 3800 Clayton, Australia

[3] Department of Genetics, Evolution & Environment, University College London, London WC1E 6BT, UK

[*] Corresponding authors:

Jonci N. Wolff; jonci.wolff@gmail.com

Björn Rogell; bjorn.rogell@zoologi.su.se

Running head: Mitochondrial genome variation affects nuclear mutation rate

Keywords: mutation rate, irradiation, *Drosophila*, mtDNA, mitonuclear

Abstract

Mutations are the raw material for evolutionary change. While the mutation rate has been thought constant between individuals, recent research has shown that poor genetic condition can elevate the mutation rate. Mitonuclear genetic conflict is a potential source of poor genetic condition, and considering the high mutation rate of mitochondrial genomes, there should be ample scope for mitochondrial mutations to interfere with genetic condition, with concomitant effects on the nuclear mutation rate. Moreover, because theory suggests mitochondrial genetic effects will often be male-biased, such effects could be more strongly felt in males than females. Here, by mating irradiated male *Drosophila melanogaster* to isogenic females bearing six distinct mitochondrial haplotypes, we tested whether mitochondrial genetic variation affects DNA repair capacity, and whether effects of mutation load on reproductive function are shaped by interactions between sex and mitochondrial haplotype. We found mitochondrial genetic effects on DNA repair, and that the mutational variance of reproductive fitness was higher in males bearing haplotypes characterized by high female fitness. These results suggest that mitochondrial genome variation may affect the mutation rate, and that induced mutations interact more strongly with male than female reproductive function. The potential for haplotype-specific effects on the nuclear mutation rate has broad implications for evolutionary dynamics, such as the accumulation of genetic load, adaptive potential, and the evolution of sexual dimorphism.

Background

Mutation is the primary source of all genetic variation, both adaptive and deleterious. Generally, *de novo* mutations are detrimental, and high mutation load will thus reduce mean fitness, posing a threat to individual and population viability (Keightley and Lynch 2003). However, mutations are also the source of standing genetic variation, enabling populations to mount an evolutionary adaptive response to sudden environmental change and changing habitats. Mutations thus stand at the core of a population's ability to adapt and to evolve. Understanding the factors that define the frequency at which new heritable mutations arise - the mutation rate - is thus of fundamental interest to evolutionary biology. Mutation rates are known to vary between species, and while most mechanisms that define the mutation rate are not yet fully resolved (Baer et al. 2007), one key component is the capability of organisms to repair damage incurred to their DNA (Sniegowski et al. 2000).

The prevailing paradigm for the analysis of mutations, from a population genetics perspective, is that the genome-wide mutation rate between individuals in a population is relatively constant (Drake et al. 1998). However, emerging research suggests inter-individual variability and context-dependency of mutation rates a more realistic scenario (Maklakov et al. 2013; Sharp and Agrawal 2016). Early research in the fruit fly *Drosophila melanogaster* (*D. melanogaster*) indicated condition-dependency of individual mutation rate by revealing sensitivity of DNA repair capacity to the thermal (Sollunn and Strömnæs 1964), nutritional (Clark 1972), and genomic environment (Würgler and Maier 1972). More recently, Maklakov *et al.* (2013) further found that environmental stress, induced via sexual harassment, reduces the yield of dominant lethal mutations in fruit fly. Such a pattern suggested

that individuals affected by environmental stressors show increased investment in repair mechanisms, albeit at the cost of reduced reproduction. Also testing condition-dependence of DNA repair, Agrawal *et al*. (2008) estimated the number of sex-linked recessive lethals (SLRLs) between low- and high-condition adult fruit fly invoked by dietary restriction during larval stages, and found that low-condition females transmitted more SLRLs than high-condition females, increasing mutational load of descendants of low-condition females. Interestingly, under similar experimental conditions it was found that relative adult usage of three DNA repair pathways differed between low- and high-condition females in response to nutritional environments experienced during early developmental stages (Wang and Agrawal 2012). Distinct DNA repair pathways differ in in their mutational consequence, and may thus underpin observed discrepancies in mutation load.

Condition-dependence of mutation rates has also been observed in response to genetic stressors. A mutation accumulation (MA) experiment found that if fruit fly were left to accrue more deleterious mutations, thereby reducing genetic condition, their descendants displayed an accelerated decrease in viability when compared to individuals from a control population, a finding consistent with an elevated mutation rate (Ávila et al. 2006). Similarly, Sharp *et al.* (2012) constructed MA lines of varying genetic fitness, and found that poor-quality genotypes, bearing deleterious alleles (unrelated to effect DNA repair or replication), caused a marked increase in spontaneous mutation rate. Analyzing the mutation spectrum in MA lines further revealed differences in point mutations, small indel rates, and rates of gene conversion when compared to control lines (Schrider et al. 2013; Sharp and Agrawal 2016). The contrasting pattern in mutation rates between genotypes of high and low genetic quality were underpinned by the use of different condition-dependent DNA repair

96 pathways, and were associated with body mass as measure of overall fitness (Wang
97 and Agrawal 2012; Sharp and Agrawal 2016). Intriguingly, rather than using artificial
98 constructs, some of these experiments relied on genetic variation maintained within
99 the same natural population, suggesting that - based on genetic condition - inter-
100 individual mutation rates within populations may be much more variable than
101 previously thought.
102
103 Nuclear genetic variation is perhaps the best-studied mechanism by which genetic
104 condition is affected. However, individual genetic condition also depends on the
105 integrity and function of mitochondrial loci and their epistatic interaction with nuclear
106 loci (Rand et al. 2004). Fundamental biological processes hinge on these interactions,
107 and perturbation of the mitonuclear lineage is known to reduce genetic fitness,
108 critically affecting the expression of a broad range of ecologically-relevant life-history
109 traits (Dobler et al. 2014; Wolff et al. 2014; Hill 2015). Standing at the core of cellular
110 function, it is plausible that genetic variation in the mitochondrial genome maintained
111 in populations also affects processes leading to modification of DNA repair capacity -
112 and thus mutation rate - via mitonuclear interactions. Generally, mutation rates are
113 much higher for mitochondrial than nuclear genes, and there should hence be ample
114 scope for mitochondrial *de novo* mutations to interfere with genetic condition via
115 mitonuclear interactions and incompatibilities. It is thus possible that mitochondrial
116 genetic diversity, and ensuing mitonuclear interactions, play a decisive role in the rate
117 at which novel mutations accumulate in the nuclear genome.
118
119 Effects of mutations are often sex-specific, and several studies in *Drosophila* have
120 found that selection against novel mutations is stronger in males than in females
121 (Pischedda and Chippindale 2005; Stewart et al. 2005; Sharp and Agrawal 2008). In

122 this context, mutations in the mitochondrial genome are of particular interest since the
123 maternal mode of mitochondrial inheritance limits selection on the mitochondrial
124 genome to females. This genetic asymmetry should in theory lead to the build-up of a
125 male-specific detrimental mutational load (Frank and Hurst 1996; Beekman et al.
126 2014), often referred to as *Mother's curse* (Gemmell et al. 2004). Indeed, a growing
127 body of empirical evidence has supported this evolutionary prediction (Smith et al.
128 2010; Innocenti et al. 2011; Camus et al. 2012; Yee et al. 2013; Camus et al. 2015;
129 Patel et al. 2016), although the generality of a male-bias across metazoans remains
130 open to question (Mossman et al. 2016). Nonetheless, if male genomic integrity is
131 indeed more compromised than that of females, it is possible that perturbation of
132 mitonuclear epistatic interactions via *de novo* mutations in the nuclear genome may be
133 more strongly felt in males than females.
134
135 Here, we tested whether low genetic condition induced by mitonuclear
136 incompatibilities affects the mutation rate in the fruit fly *D. melanogaster*. Fruit flies
137 offer an exceptional model to test this question because males virtually lack any post-
138 meiotic activity in DNA repair in sperm (Würgler and Maier 1972; Graf et al. 1979).
139 However, DNA damage in mutagenized sperm can be repaired by the maternal repair
140 system post-fertilization in zygotes (Vogel et al. 1985). Mutagenized sperm can thus
141 be used to subject the female DNA repair system to standardized DNA damage by
142 crossing irradiated males to healthy wild-type females. Subsequent changes in egg-
143 hatch rates can therefore be used as a proxy for female DNA repair capacity of lethal-
144 dominant alleles. We have conducted two experiments. In the first experiment, we
145 probed for potential effects of mitochondrial genetic variation on DNA repair capacity
146 utilizing six strains of fruit fly, where each strain harbored one of six distinct
147 mitochondrial haplotypes, expressed alongside an isogenic nuclear background (w^{1118};

148 Bloomington #5905). The fly strains bearing distinct mitochondrial haplotypes were
149 divided into two groups based on their genetic condition as previously determined
150 (Florencia Camus; personal communication). Mitochondrial haplotypes with a hatch
151 rate higher than 72% (range: 72.1%-77%) were categorized as high genetic fitness,
152 whereas mitochondrial haplotypes with hatch rates less than 65% (range 64.1% -
153 64.7%) were categorized as lo, genetic fitness. To achieve this, we crossed irradiation-
154 mutagenized males of the shared isogenic nuclear background to females of each of
155 the six mitochondrial strains and subsequently determined the egg hatch rate of these
156 F_0 females. For the second experiment, we used F_1 offspring reared from the first
157 experiment to examine whether the irradiation-induced nuclear mutation load
158 interfered with reproductive functions in males and females. To do so, we determined
159 egg hatch rate for flies derived from crosses of male or female F1 offspring mated to
160 flies of the opposite sex sourced from our untreated isogenic control population
161 (hence carrying half a genome with novel mutation load, and one healthy half of the
162 genome). The inclusion of haplotypes of both low and high genetic fitness allowed us
163 to probe for effects of mitochondrial haplotype and female condition on DNA repair.
164 Together, these experiments hence enabled us to test (1) whether mitochondrial
165 genomic variation affects DNA repair capacity, (2) whether this effect is mediated via
166 female genetic condition, and (3) whether mitochondrial genetic effects on DNA
167 repair are sex-specific in magnitude.
168

169 **Methods**

170

171 **Fly strains**

172 We used six mitochondrial haplotypes, originally sourced from natural populations in
173 Alstonville Australia [ALS], Barcelona Spain [BAR], Israel [ISR], Madang Papua

174 New Guinea [MAD], Sweden [SWE], and Zimbabwe [ZIM]. These haplotypes are
175 delineated by a maximum of 172 mutations, 38 of which lie within the coding region,
176 and 13 of which cause non-synonymous changes in the amino acid sequence (Clancy
177 2008; Wolff et al. 2015). None of these mutations (nor the genes encoded in the
178 mtDNA) have known involvement in processes of DNA replication or DNA repair.
179 Each of these haplotypes had been placed alongside an isogenic nuclear background,
180 w^{1118}, creating distinct "mitochondrial strains" (Clancy 2008), and each mitochondrial
181 strain has been maintained in independent duplicates since their inception in 2007
182 (hereafter "mitochondrial strain duplicates"). Since then, mitochondrial strain
183 duplicates were propagated as separate entities, with virgin daughters of each
184 mitochondrial strain duplicate back-crossed to males of the w^{1118} strain for a further
185 70 generations to continually warrant nuclear genomic isogenicity across all
186 mitochondrial strains. The w^{1118} strain itself is propagated by one pair of full-siblings
187 to maintain isogenicity within the nuclear background. Using mitochondrial strain
188 duplicates as internal controls, the genetic architecture of this model thus allows us to
189 unambiguously partition true mitochondrial genetic from nuclear genetic effects.
190 Furthermore, all mitochondrial strains are density-controlled during breeding and
191 experimental procedures, maintained on a potato-dextrose-agar medium at constant
192 temperature (25.0 ± 0.1°C), and diurnal cycle (12h:12h light:dark). All maintenance
193 and experimental crosses (including those of the parental and great-parental
194 generation) involved age-controlled flies (4 days of age at time of oviposition).
195

196 **Irradiation**

197 Irradiation of focal flies was conducted at the Monash Animal Research Platform
198 (MARP), using a Caesium-137-based Gammacell® 40 Exactor (Best Theratronics
199 Ltd., Ottawa, Canada). To determine the appropriate irradiation dosage for our

200 experiments, we conducted a separate dose-effect experiment on males of the w^{1118}
201 strain. Briefly, we subjected replicated cohorts of ten w^{1118} males each to increasing
202 levels of irradiation (0, 6, 12, 18, 24 Gray [Gy]; three biological replicates per
203 dosage), and determined the irradiation dose at which the percentage of unhatched
204 eggs ovipositioned by w^{1118} females mated to irradiated males reached approximately
205 50%. The required dosage of irradiation was thus determined to be 20 Gy (Figure 1S).
206

207 **Hatch Rate Assay**

208 The flies of all of the focal crosses, outlined below under *Experimental Design*, were
209 allowed to mate in cohorts of 30 flies at a 1:1 sex ratio for 24 hours. Thereafter, flies
210 were transferred for ovipositioning into 70 ml specimen containers (with
211 mechanically-perforated bottoms to enable aeration), where the inner lid diameter –
212 covered with potato-dextrose-agar medium - served as an egg-laying pad (part
213 #S5744SU, Techno Plas Pty Ltd, Adelaide, Australia). After 20 hours of
214 ovipositioning, flies were removed, and the eggs were incubated for a further 28 hours
215 for hatching. After incubation, egg-laying pads were transferred to 4°C to halt
216 development, and the number of hatched and unhatched eggs per container was
217 counted.
218

219 **Experimental design**

220 *Effects of the mitochondrial haplotype on DNA repair*

221 In the first experiment - conducted on the F_0 generation - we tested the effect of the
222 mitochondrial haplotype on the capacity for DNA repair. To achieve this, we
223 established ten replicate populations of fruit fly - each consisting of 15 virgin females
224 of a given mitochondrial strain and 15 irradiated (treatment) or 15 non-irradiated
225 (pcontrol) virgin w^{1118} males - for each strain duplicate and for each of six

226 mitochondrial strains (= 6 mitochondrial strains × 2 duplicate strains × 2 treatments =
227 24 population categories × 10 replicate populations = 240 populations in total; Figure
228 S2). Control strains were treated as procedural controls, *i.e.* were transported
229 alongside treated strains to and from the irradiation facility. Males and females of the
230 F_0 generation were combined for a 24-hour mating period immediately after the
231 irradiation treatment of w^{1118} males. After mating, flies were transferred for 20 hours
232 onto egg-laying pads for ovipositioning. At the end of ovipositioning, egg-laying pads
233 were divided into two equal halves, such that both halves contained approximately
234 equal numbers of eggs. One half was transferred to 4°C after 28 hours of incubation to
235 halt development for the Hatch Rate Assay. The second half was transferred into a
236 new vial containing potato-dextrose-agar medium to generate the F_1 generation.
237 Importantly, at no time of the experiment were the focal mitochondrial haplotypes,
238 which were the subject of this study, exposed to irradiation (only males were
239 irradiated and they possessed the 'w^{1118}, mitochondrial haplotype, which was not
240 transmitted to the offspring, given the maternal inheritance of the mitochondrial
241 genome), thus warranting that all irradiation-induced mutations transmitted to the
242 developing zygotes, following the matings, were limited to nuclear loci.
243
244 *Effects of Interactions between mitochondrial haplotype and irradiation-induced*
245 *mutation load on reproductive function*
246 In the second experiment - conducted on the F_1 generation - we tested whether the
247 mutational load induced by irradiation of males in the F_0 generation, interacted with
248 reproductive function of male and female offspring. To test this, we collected ten
249 virgin males and ten virgin females from each of the 240 F_1 populations, and
250 combined flies of the same sex for each of the 24 population categories (six
251 mitochondrial strains x two duplicate strains x two treatments x two sexes = 48 pools

252 of 100 flies each). We then randomly drew 75 flies from each pool to establish five
253 replicate vials containing 15 virgin flies each for both sexes (five 'male' vials, five
254 'female' vials) and for each of the 24 population categories (Figure S3). To each of
255 the 240 vials we added 15 virgin flies of the opposite sex sourced from the w^{1118}
256 control population, allowed for a 24-hour mating period, and conducted a Hatch Rate
257 Assay on all 240 populations (Figure S3). We used this data to investigate both the
258 changes in mean reproductive fitness across our experimental units, and changes in
259 reproductive variance across our experimental units.
260
261 A potential caveat of our study is that this experimental design was not optimized to
262 analyze variances as 15 focal flies were kept in each 'male' and 'female' vial. As a
263 consequence, the residual variance was defined as the variance across vials rather than
264 across individuals. While this may present a shortcoming of our experimental design,
265 the presence of, for example, one sterile male would decrease vial variance by 1/15
266 (assuming the same mating probability across all males per vial). We hence viewed
267 vial variances as an acceptable proxy for variances in reproductive success. If males
268 with poor fertility also perform poorly in sexual competition, vial variance values
269 should be conservative, as other more fertile males would have mated with the
270 females. However, it is possible that results were biased if sterile males (producing
271 sterile sperm) are equally successful in sexual competition and if the same does not
272 apply to female vials. This could be the case if females that carry a detrimental
273 mutational load produce fewer eggs (rather than unviable eggs), as the proportion of
274 eggs that hatch per vial could be inflated by increased fecundity of fertile females,
275 producing similar variances across vials (each vial has similar proportion of hatched
276 versus unhatched eggs, as eggs were only laid by healthy females). If this was true,
277 we would expect fewer eggs in vials with irradiated females. We hence tested for

278 differences in total egg count between the treatments using a generalized linear model
279 with a Poisson distribution allowing for overdispersion of the data, and found no
280 significant effects (treatment*mitochondial haplotype interaction: P = 0.88).
281
282 **Statistical analysis**
283 *Analysis of differences in means - Effects of the mitochondrial haplotype on DNA*
284 *repair*
285 We tested the effect of irradiation on DNA repair in two different models; one
286 assessing whether DNA repair differed between specific haplotypes, and one
287 assessing whether female genetic condition that characterized the different haplotypes
288 (high and low) affected DNA repair. In the first model we analysed the proportion of
289 eggs that failed to hatch in crosses where females were mated to irradiated males as a
290 binomial response (number of hatched eggs, number of eggs that failed to hatch)
291 depending on the treatment (irradiated, control) and mitochondrial haplotype (ALS,
292 BAR, ISR, MAD, SWE, ZIM), as well as their interaction. Mitochondrial duplicate
293 was added to the model as a random effect, explicitly nested under mitochondrial
294 haplotype. In the second model, we assessed hatch rate as a function of condition
295 (high, low), treatment, and their interaction. In this model, mitochondrial haplotype
296 (nested under treatment and condition) and duplicate (explicitly nested under
297 haplotype) were added as random effects. In both models, a significant interaction
298 between mitochondrial haplotype (first model) or condition (second model) with
299 irradiation treatment would imply that fly strains harbouring distinct mitochondrial
300 haplotypes differ in their capacity to repair DNA damage.
301
302 *Analysis of differences in means - Effects of Interactions between mitochondrial*
303 *haplotype and novel mutation load on reproductive function*

304 We continued by analysing the effect of the introduced mutations on reproductive
305 function, defined as the ability to produce viable gametes of both males and females.
306 We started with two initial models. One model in which we added treatment, sex and
307 mitochondrial haplotype, as well as all interactions; and a second model in which we
308 added treatment, sex and condition, as well as all interactions. Mitochondrial
309 duplicate, explicitly nested under mitochondrial haplotype, was added as random
310 effect to all models. For the model examining the effect of female genetic condition
311 on offspring reproductive performance, mitochondrial haplotype was added as
312 random effect, explicitly nested under condition. Given the high number of
313 explanatory variables, both initial models were subsequently reduced by removing
314 marginal terms, and where the best fit was identified using lowest deviance
315 information criterion (DIC) score.
316
317 *Analysis of differences of variances - Effects of Interactions between mitochondrial*
318 *haplotype and novel mutation load on reproductive function*
319 Effects of mutation load are likely to change the mean value of fitness components
320 across different experimental units, and also to increase individual variation reflecting
321 differences in individual genetic fitness. Hence, differences in variances could
322 potentially inform how haplotype- or sex-specific mutation loads accumulate. We thus
323 probed for differences in variances depending on the mitochondrial haplotype and
324 irradiation treatment by assessing whether models (with condition, sex, and treatment
325 as fixed effects and mitochondrial haplotype and duplicate as random effects)
326 improved by estimating variances for random effects separately, leading to (i)
327 treatment-specific variances for each random effect (including the residual
328 component), and (ii) sex-specific variances exclusively across vials derived from
329 irradiated parents. We only fitted sex-specific variances for treated vials considering

330 our explicit hypothesis that variances should be higher in vials containing flies
331 derived from irradiated parents. As both female and male offspring of non-irradiated
332 parents revealed low variation in reproductive success, we continued by limiting
333 analyses to offspring data derived from irradiated parents. Within this dataset we
334 tested whether residual variances of offspring reproductive success differed depending
335 on the genetic condition of the female haplotype. In these models, we included sex
336 and condition, as well as their interaction, as fixed effects and mitochondrial
337 haplotype as random effect (nested under condition and irradiation treatment). We did
338 not include duplicate, as duplicate explained a very minor fraction of the variance.
339 We also restricted models to test for condition effects, as testing for specific residual
340 variances for each sex × haplotype combination would lead to a disproportionally
341 large number of parameters considering the structure of the data.
342
343 We conducted all analyses using a Bayesian mixed model using the R package
344 MCMCglmm accounting for the overdispersion present in our binomial data
345 (Hadfield 2010). For all models we discarded the first 20,000 iterations as burn-in,
346 followed by 50,000 iterations, sampled every 500 iterations, yielding a posterior
347 sample of 1,000 iterations per chain. Three parallel chains were run for each model
348 and their convergence was assessed using the Gelman-Rubin statistic. All
349 autocorrelations were under an absolute value of 0.11. Flat priors were used on fixed
350 effects and locally uninformative priors were used on random effects.
351
352 **Results**
353
354 *Effects of the mitochondrial haplotype on DNA repair*
355 The proportion of eggs that failed to hatch was affected by both mitochondrial

356 haplotype and treatment (irradiated; control), and their interaction (Table 1). Our
357 results indicate that haplotypes ISR, MAD and ZIM had lower hatch rates than
358 haplotypes ALS, BAR, and SWE, and that hatch rate was negatively affected by
359 irradiation treatment (Figure 1; Table 1). While the general effect of irradiation on
360 hatch rate was stronger than that of the interaction between haplotype and irradiation
361 treatment, our experiments revealed that haplotypes BAR, MAD and ZIM were less
362 affected by irradiation treatment than haplotypes ALS, ISR and SWE. Importantly,
363 haplotypes with both lower and higher baseline fecundity were among haplotypes that
364 were more strongly affected by the irradiation treatment, refuting our hypothesis that
365 observed mitochondrial genetic effects on hatch rate are mediated via impaired DNA
366 repair of low genetic condition females. Indeed, in our analysis of condition effects on
367 DNA repair, the interaction between treatment and condition was not significant
368 (Table 1).
369
370 *Effects of Interactions between mitochondrial haplotype and novel mutation load on*
371 *reproductive function*
372 In the second generation, we found that while both treatment and mitochondrial
373 haplotype affected hatching probability, sex did not have any significant effects on
374 hatching success (Table 2, Figure 2). Neither did we find evidence for interactions
375 between mitochondrial haplotype and irradiation treatment, prompting the removal of
376 all interactions from models with a delta DIC > 3. When analyzing the effect of
377 condition on reproductive success, we found that while both condition and irradiation
378 treatment had significant effects on reproductive success, their interactions were non-
379 significant (Table 2).
380
381 Analyzing variances, we found strong support for the inclusion of different residual

382 variances for flies derived from irradiated flies (Delta DIC = -87), with offspring of
383 irradiated parents exhibiting higher variances. Estimating different variances for
384 irradiation treatment did not improve the fit for mitochondrial variances (delta DIC =
385 4), or duplicate variances (delta DIC = 1). However, separation into sex- and
386 treatment-specific residual variances did improve the fit (delta DIC = -8), with males
387 derived from irradiated parents exhibiting higher residual variances (Figure 3). When
388 restricting the analysis to irradiated flies only, we found that irradiated males from
389 lines that were characterized by high genetic condition had significantly higher
390 variances than females (delta DIC = 2.8; Figure 3).
391

392 **Discussion**

393 Mitochondrial genome variation is known to affect genetic condition - and thus
394 organismal fitness - via mitonuclear interactions and genetic conflict within
395 mitonuclear gene complexes (Burton et al. 2006; Ellison and Burton 2006; Dowling et
396 al. 2007a; Dowling et al. 2007b; Barreto and Burton 2013; Dobler et al. 2014; Wolff
397 et al. 2014). Because the nuclear mutation rate has been found to be affected by poor
398 condition invoked by environmental and genetic stressors (Agrawal and Wang 2008;
399 Sharp and Agrawal 2012; Wang and Agrawal 2012; Maklakov et al. 2013), it appears
400 likely that condition-effects induced by mitonuclear incompatibilities might therefore
401 play a significant role in defining the rate at which mutations accumulate in the
402 nuclear genome. Indeed, subjecting females to a standardized mutation load through
403 mutagenized sperm in our first experiment, we show that female capacity to repair *de*
404 *novo* mutations was contingent on the mitochondrial haplotype. Mitochondria play a
405 crucial role in cell metabolism and cellular respiration (Shadel and Horvath 2015),
406 and perturbation of mitochondrial function via mitonuclear genetic conflict is known
407 to affect physiological state (Arnqvist et al. 2010; Barreto and Burton 2013; Latorre-

408 Pellicer et al. 2016; Wolff et al. 2016a). Our results thus indicate that changes in
409 physiological state invoked by mitonuclear conflict may extend to changes in the
410 susceptibility and the capacity to repair novel mutations. Contrary to our expectation,
411 however, comparing hatch rate between females of high versus low genetic condition
412 after irradiation treatment, we found that observed mitochondrial genetic effects on
413 DNA repair were not condition-dependent on female reproductive fitness. This
414 finding indicates that, while both female fertility (*e.g.*, condition) and DNA repair
415 capacity are contingent on the mitochondrial haplotype, the mitonuclear epistatic
416 interactions modulating DNA repair capacity and female fertility differ between these
417 traits, and that the mitochondrial genetic effects on DNA repair are not linked to
418 effects on female condition.
419
420 Our finding that DNA repair capacity is modulated by the mitochondrial haplotype
421 provides valuable insight into the mechanisms that shape the mutation rate, and that
422 subsequently feed into processes of adaptation and ultimately speciation. A role for
423 mitochondrial genome variation in modulating nuclear mutation rate is particularly
424 interesting considering the high genetic diversity and mutation rate heterogeneity
425 generally observed for mitochondrial genomes (Brown et al. 1979; Denver et al. 2000;
426 Bazin et al. 2006; Nabholz et al. 2008; Nabholz et al. 2009). Direct measurement of
427 mutation rate across 200 generations of spontaneous mutation accumulation in *D.*
428 *melanogaster*, for example, estimated the overall mitochondrial mutation rate to be
429 between 10 to 70 times higher than the nuclear mutation rate depending on the nature
430 and strand identity of mutations (HAAG-LIAUTARD *et al.* 2008). Major mechanisms
431 thought to underpin the high mutation rate and genetic diversity of mitochondrial
432 genomes are the mutational damage incurred via copying errors during the replication
433 process of mitochondrial genomes (Larsson 2010; Ameur et al. 2011; Kauppila and

434 Stewart 2015), and to a lesser extent, the mutational damage incurred via the leakage
435 of reactive oxygen species (ROS) generated by processes of cellular respiration that
436 take place in mitochondria (Cooke et al. 2003; Balaban et al. 2005; Itsara et al. 2014).
437 Our finding that mitochondrial genetic variation can affect nuclear mutation rates thus
438 suggests that the mechanisms that underpin high mitochondrial mutation rates may
439 ultimately also be drivers of nuclear genomic diversity, if mitochondrial haplotypes
440 interact with DNA repair capacity. Considering the high mtDNA diversity in natural
441 populations (Maklakov et al. 2006; Dowling et al. 2007b), our results further suggests
442 that mitochondrial genetic effects on nuclear mutation rates should be observable
443 between individuals of the same population, and that mutation rate heterogeneity
444 within populations may be much more common and pronounced than previously
445 thought. Support for this notion comes also from recent research that found condition-
446 dependence of individual mutation rate in fruit fly in response to genetic or
447 environmental stressors, such as food scarcity or sexual harassment, impacting on
448 individual physiological state, and consequently mutation rates (Agrawal and Wang
449 2008; Sharp and Agrawal 2012; Wang and Agrawal 2012; Maklakov et al. 2013).
450
451 In our second experiment we tested whether reproductive fitness of offspring bearing
452 novel mutation load, attributable to an inherited copy of an irradiated haploid genome,
453 differed between the sexes, and whether sex-specific variation in reproductive success
454 was higher in low than high condition females. While sex and mitochondrial
455 haplotype did not have any significant effects on mean reproductive success, this test
456 revealed that male offspring derived from high condition females exhibited higher
457 residual variances in hatch rate than their female siblings. This may suggest that
458 specific mutations interacted with the mitochondrial haplotype in a sex-specific
459 manner, and that these effects were contingent on the condition of female

460 mitochondrial haplotype. Likely, individual variation in mutation effects on
461 reproductive function exhibited by each male differed between high and low genetic
462 condition strains, suggesting that males derived from high condition females harbored
463 nuclear mutations that interacted more strongly with mitochondrial loci than the
464 mutations harbored by males derived from low condition females. While this finding
465 was unexpected, the key to understanding this pattern is likely to lie within the
466 uniparental mode of mitochondrial inheritance. In this regard, our observations are to
467 some extent congruent with patterns of male-biased mitochondrial genetic effects as
468 suggested by the *Mother's curse* hypothesis (Frank and Hurst 1996; Gemmell et al.
469 2004). Under this hypothesis, mitochondrial traits are not under direct selection in
470 males, enabling the accumulation of mutations in mitochondrial genes that are either
471 male-harming or sexually antagonistic in effect (male-harming, female-beneficial),
472 and which are known to negatively affect male reproductive traits (Clancy et al. 2011;
473 Yee et al. 2013; Dowling et al. 2015; Patel et al. 2016; Wolff et al. 2016b). It is thus
474 possible that, if the mitochondrial haplotypes characterized by high female condition
475 harbor a sexually antagonistic mutation load, that effects of genetic challenge via
476 irradiation-induced mutation load may be more strongly felt in strains of high than
477 low condition haplotypes. Alternatively, it is also conceivable that condition-
478 dependent male variances were driven by differences in the strength of female germ
479 line selection. However, effects of germ line selection would have to be both strong,
480 and differ between haplotypes to explain observed differences between males derived
481 from high and low condition females.
482
483 Another potential mechanism to explain observed sex-specific differences in
484 variances are interactions between mitochondrial haplotype and Y chromosome.
485 Contrary to mitochondria, the Y chromosome is inherited strictly paternally, and is

486 thus subject to male-specific selection (Bachtrog 2013). In *D. melanogaster*, the Y
487 chromosome codes for less than 20 male-specific genes, and male fitness has been
488 found strongly affected by Y chromosome polymorphisms in this species
489 (Chippindale and Rice 2001; dos Santos et al. 2015). Moreover, because of its male-
490 specificity in inheritance and gene content, the Y chromosome has been suggested as
491 candidate region to harbour loci that host nuclear modifier alleles that compensate
492 male-harming mutations that may have accumulated under influences of the sex-
493 biased selective sieve described by *Mother's curse* in mitochondrial genes (Rogell et
494 al. 2014; Dean et al. 2015; Yee et al. 2015). Following our breeding scheme, male
495 offspring carried a Y chromosome harboring a novel mutation load from irradiation-
496 treated male parents, while the X chromosome and one of each of the autosomes were
497 received from an untreated female. Female offspring instead harbored one haploid
498 genome each from an untreated and treated parent, leaving females with a genetically
499 healthy copy for each chromosome. It is thus conceivable that irradiation-induced
500 mutation load in male-specific modifier alleles located on the Y chromosome may
501 underpin increased variances in male reproductive success across different
502 haplotypes.
503
504 Together, our findings suggest that mitochondrial genome variation and ensuing
505 mitonuclear interactions and/or incompatibilities may routinely play a pivotal role in
506 the rate at which *de novo* mutations accumulate in the nuclear genome. The
507 implications of mitochondrial haplotype-specific effects on the nuclear mutation rate
508 are broad. Mutations generally decrease fitness, and increases in the mutation rate are
509 thus likely to reduce mean fitness, posing a threat to population viability. Hybrid
510 zones, for example, may be particularly vulnerable to adverse mitonuclear effects on
511 mutation rates. Here, the creation of novel mitonuclear allelic combinations between

512 distantly related individuals are likely to lead to genetic incompatibilities, potentially
513 accelerating the mutation rate (Liu et al. 2017). Conversely, however, populations
514 with high genetic diversity in mitonuclear gene complexes may exhibit increased
515 mutational variation, leading to increased standing genetic variation and therefore
516 increased capacity to adapt and survive in changing environments. This could in
517 theory aid populations in secondary contact zones, where populations of distinct
518 mitochondrial haplotypes could gain increases in nuclear genetic diversity not only by
519 population admixture but also from increased mutation rate. Interestingly, within-
520 population mitonuclear genetic variation also implies that some of a population's
521 individuals may be disproportionately burdened with mutation load. Individuals with
522 particularly high mutation rate (mutator individuals) could be exceptionally important
523 in times of strong selective pressure and in cases where an adaptive response requires
524 several mutations at once. The transient presence of mutator individuals may thus
525 supplement a population's potential to adapt, while loading the mutational burden on
526 only few of a population's individuals, could reduce long-term mutational load and
527 aid escaping the risk of population extinction that would otherwise eventually ensue
528 via mutational meltdown (Agrawal 2002; Shaw and Baer 2011).
529
530 In summary, we have provided compelling empirical support that the mitochondrial
531 haplotype affects DNA repair, and therefore mutation rate. The ubiquity of
532 mitochondrial genetic effects on life-history expression further suggests these effects
533 to be pervasive and sizable in magnitude between and within populations (Dowling et
534 al. 2008; Dobler et al. 2014; Alexander et al. 2017). Our data thus provide important
535 new insight into the factors that underpin and determine the mutation rate, and
536 therefore the evolutionary processes that are core to evolutionary diversification and
537 population viability.

538

539 **Data accessibility**

540 All raw data are available through the Dryad Digital Repository (www.datadryad.org)

541 #xxx.

542

543 **Authors' Contributions**

544 J.N.W. and B.R. conceived, designed, and analysed the experiments; J.N.W and

545 M.F.C performed the experiment, J.N.W., D.K.D. and B.R wrote the paper.

546

547 **Competing interests**

548 We declare we have no competing interests.

549

550 **Funding**

551 This work was supported by the Carl Tryggers Foundation for Scientific Research

552 (CTS14:404) to JNW, the Australian Research Council (DP1092897) to DKD, and the

553 Swedish Research Council (VR:2013-5064) to BR.

554

555 **Acknowledgements**

556 We thank Belinda Van Leeuwen and Monique Centrone at the Monash Animal

557 Research Platform (MARP) for their help to conduct irradiation experiments. We also

558 thank David Clancy for generously providing the fly strains in 2007.

559

560 **References**

561 Agrawal, A. F. 2002. Genetic loads under fitness-dependent mutation rates. J. Evol.

562 Biol. 15:1004-1010.

563 Agrawal, A. F. and A. D. Wang. 2008. Increased transmission of mutations by low-

564 condition females: Evidence for condition-dependent DNA repair. PLoS Biol.
565 6:e30.
566 Alexander, H. K., S. I. Mayer, and S. Bonhoeffer. 2017. Population Heterogeneity in
567 Mutation Rate Increases the Frequency of Higher-Order Mutants and Reduces
568 Long-Term Mutational Load. Mol. Biol. Evol. 34:419-436.
569 Ameur, A., J. B. Stewart, C. Freyer, E. Hagstrom, M. Ingman, N. G. Larsson, and U.
570 Gyllensten. 2011. Ultra-deep sequencing of mouse mitochondrial DNA:
571 mutational patterns and their origins. PLoS Genet. 7:e1002028.
572 Arnqvist, G., D. K. Dowling, P. Eady, L. Gay, T. Tregenza, M. Tuda, and D. J.
573 Hosken. 2010. Genetic architecture of metabolic rate: Environment specific
574 epistasis between mitochondrial and nuclear genes in an insect. Evolution
575 64:3354-3363.
576 Ávila, V., D. Chavarrías, E. Sánchez, A. Manrique, C. López-Fanjul, and A. García-
577 Dorado. 2006. Increase of the spontaneous mutation rate in a long-term
578 experiment with *Drosophila melanogaster*. Genetics 173:267-277.
579 Bachtrog, D. 2013. Y-chromosome evolution: emerging insights into processes of Y-
580 chromosome degeneration. Nat. Rev. Genet. 14:113-124.
581 Baer, C. F., M. M. Miyamoto, and D. R. Denver. 2007. Mutation rate variation in
582 multicellular eukaryotes: causes and consequences. Nat. Rev. Genet. 8:619-
583 631.
584 Balaban, R. S., S. Nemoto, and T. Finkel. 2005. Mitochondria, oxidants, and aging.
585 Cell 120:483-495.
586 Barreto, F. S. and R. S. Burton. 2013. Elevated oxidative damage is correlated with
587 reduced fitness in interpopulation hybrids of a marine copepod. Proc. R. Soc.
588 Biol. Sci. Ser. B 280:20131521
589 Bazin, E., S. Glémin, and N. Galtier. 2006. Population size does not influence

590 mitochondrial genetic diversity in animals. Science 312:570-572.
591 Beekman, M., D. K. Dowling, and D. K. Aanen. 2014. The costs of being male: Are
592 there sex-specific effects of uniparental mitochondrial inheritance? Philos.
593 Trans. R. Soc. Lond. B Biol. Sci. 369.
594 Brown, W. M., M. George, Jr., and A. C. Wilson. 1979. Rapid evolution of animal
595 mitochondrial DNA. Proc. Natl. Acad. Sci. U. S. A. 76:1967-1971.
596 Burton, R. S., C. K. Ellison, and J. S. Harrison. 2006. The sorry state of F2 hybrids:
597 Consequences of rapid mitochondrial DNA evolution in allopatric populations.
598 The American Naturalist 168: Suppl 6: S14-24.
599 Camus, M. F., D. J. Clancy, and D. K. Dowling. 2012. Mitochondria, maternal
600 inheritance, and male aging. Curr. Biol. 22:1-5.
601 Camus, M. F., J. B. Wolf, E. H. Morrow, and D. K. Dowling. 2015. Single
602 nucleotides in the mtdna sequence modify mitochondrial molecular function
603 and are associated with sex-specific effects on fertility and aging. Curr. Biol.
604 25:2717-2722.
605 Chippindale, A. K. and W. R. Rice. 2001. Y chromosome polymorphism is a strong
606 determinant of male fitness in Drosophila melanogaster. Proc. Natl. Acad. Sci.
607 U. S. A. 98:5677-5682.
608 Clancy, D. J. 2008. Variation in mitochondrial genotype has substantial lifespan
609 effects which may be modulated by nuclear background. Aging Cell 7:795-
610 804.
611 Clancy, D. J., G. R. Hime, and A. D. Shirras. 2011. Cytoplasmic male sterility in
612 *Drosophila melanogaster* associated with a mitochondrial CYTB variant.
613 Heredity 107:374-376.
614 Clark, A. M. 1972. Influence of nutritional state of females on frequency of X/O
615 males recovered after matings with irradiated males. Dros. Inf. Service 49:75.

616 Cooke, M. S., M. D. Evans, M. Dizdaroglu, and J. Lunec. 2003. Oxidative DNA
617 damage: Mechanisms, mutation, and disease. FASEB J. 17:1195-1214.
618 Dean, R., B. Lemos, and D. K. Dowling. 2015. Context-dependent effects of Y
619 chromosome and mitochondrial haplotype on male locomotive activity in
620 *Drosophila melanogaster*. J. Evol. Biol. 28:1861-1871.
621 Denver, D. R., K. Morris, M. Lynch, L. L. Vassilieva, and W. K. Thomas. 2000. High
622 direct estimate of the mutation rate in the mitochondrial genome of
623 *Caenorhabditis elegans*. Science 289:2342-2344.
624 Dobler, R., B. Rogell, F. Budar, and D. K. Dowling. 2014. A meta-analysis of the
625 strength and nature of cytoplasmic genetic effects. J. Evol. Biol. 27:2021-
626 2034.
627 dos Santos, G., A. J. Schroeder, J. L. Goodman, V. B. Strelets, M. A. Crosby, J.
628 Thurmond, D. B. Emmert, W. M. Gelbart, and t. F. Consortium. 2015.
629 FlyBase: introduction of the *Drosophila melanogaster* Release 6 reference
630 genome assembly and large-scale migration of genome annotations. Nucleic
631 Acids Res. 43:D690-D697.
632 Dowling, D. K., K. C. Abiega, and G. Arnqvist. 2007a. Temperature-specific
633 outcomes of cytoplasmic-nuclear interactions on egg-to-adult development
634 time in seed beetles. Evolution 61:194-201.
635 Dowling, D. K., U. Friberg, F. Hailer, and G. Arnqvist. 2007b. Intergenomic epistasis
636 for fitness: within-population interactions between cytoplasmic and nuclear
637 genes in *Drosophila melanogaster*. Genetics 175:235-244.
638 Dowling, D. K., U. Friberg, and J. Lindell. 2008. Evolutionary implications of non-
639 neutral mitochondrial genetic variation. Trends Ecol. Evol. 23:546-554.
640 Dowling, D. K., D. M. Tompkins, and N. J. Gemmell. 2015. The Trojan Female
641 Technique for pest control: A candidate mitochondrial mutation confers low

642 male fertility across diverse nuclear backgrounds in *Drosophila melanogaster*.
643 Evol. Appl. 8:871–880.
644 Drake, J. W., B. Charlesworth, D. Charlesworth, and J. F. Crow. 1998. Rates of
645 spontaneous mutation. Genetics 148:1667-1686.
646 Ellison, C. K. and R. S. Burton. 2006. Disruption of mitochondrial function in
647 interpopulation hybrids of *Tigriopus californicus*. Evolution 60:1382-1391.
648 Frank, S. A. and L. D. Hurst. 1996. Mitochondria and male disease. Nature 383:224-
649 225.
650 Gemmell, N. J., V. J. Metcalf, and F. W. Allendorf. 2004. Mother's curse: The effect
651 of mtDNA on individual fitness and population viability. Trends Ecol. Evol.
652 19:238-244.
653 Graf, U., M. M. Green, and F. E. Würgler. 1979. Mutagen-sensitive mutants in
654 *Drosophila melanogaster*: Effects of premutational damage. Mutat. Res. Fund.
655 Mol. Mech. Mut. 63:101-112.
656 Hadfield, J. D. 2010. MCMC methods for multi-response generalized linear mixed
657 models: The MCMCglmm R package. J. Stat. Softw. 33:22.
658 Hill, G. E. 2015. Mitonuclear Ecology. Mol. Biol. Evol. 32:1917-1927.
659 Innocenti, P., E. H. Morrow, and D. K. Dowling. 2011. Experimental evidence
660 supports a sex-specific selective sieve in mitochondrial genome evolution.
661 Science 332:845-848.
662 Itsara, L. S., S. R. Kennedy, E. J. Fox, S. Yu, J. J. Hewitt, M. Sanchez-Contreras, F.
663 Cardozo-Pelaez, and L. J. Pallanck. 2014. Oxidative stress is not a major
664 contributor to somatic mitochondrial DNA mutations. PLoS Genet.
665 10:e1003974.
666 Kauppila, J. H. and J. B. Stewart. 2015. Mitochondrial DNA: Radically free of free-
667 radical driven mutations. Acta Biochim. Biophys. Sin. 1847:1354-1361.

668 Keightley, P. D. and M. Lynch. 2003. Toward a realistic model of mutations affecting
669 fitness. Evolution 57:683-689.
670 Larsson, N. G. 2010. Somatic mitochondrial DNA mutations in mammalian aging.
671 Annu. Rev. Biochem. 79:683-706.
672 Latorre-Pellicer, A., R. Moreno-Loshuertos, A. V. Lechuga-Vieco, F. Sánchez-Cabo,
673 C. Torroja, R. Acín-Pérez, E. Calvo, E. Aix, A. González-Guerra, A. Logan,
674 M. L. Bernad-Miana, E. Romanos, R. Cruz, S. Cogliati, B. Sobrino, Á.
675 Carracedo, A. Pérez-Martos, P. Fernández-Silva, J. Ruíz-Cabello, M. P.
676 Murphy, I. Flores, J. Vázquez, and J. A. Enríquez. 2016. Mitochondrial and
677 nuclear DNA matching shapes metabolism and healthy ageing. Nature
678 535:561-565.
679 Liu, H., Y. Jia, X. Sun, D. Tian, L. D. Hurst, and S. Yang. 2017. Direct determination
680 of the mutation rate in the bumblebee reveals evidence for weak
681 recombination-associated mutation and an approximate rate constancy in
682 insects. Mol. Biol. Evol. 34:119-130.
683 Maklakov, A. A., U. Friberg, D. K. Dowling, and G. Arnqvist. 2006. Within-
684 population variation in cytoplasmic genes affects female life span and aging in
685 *Drosophila melanogaster*. Evolution 60:2081-2086.
686 Maklakov, A. A., S. Immler, H. Løvlie, I. Flis, and U. Friberg. 2013. The effect of
687 sexual harassment on lethal mutation rate in female *Drosophila melanogaster*.
688 Proc. R. Soc. Lond. B Biol. Sci. 280.
689 Mossman, J. A., L. M. Biancani, and D. M. Rand. 2016. Mitonuclear epistasis for
690 development time and its modification by diet in *Drosophila*. Genetics
691 10.1534/genetics.116.187286.
692 Nabholz, B., S. Glemin, and N. Galtier. 2008. Strong variations of mitochondrial
693 mutation rate across mammals--the longevity hypothesis. Mol. Biol. Evol.

694 25:120-130.
695 Nabholz, B., S. Glémin, and N. Galtier. 2009. The erratic mitochondrial clock:
696 variations of mutation rate, not population size, affect mtDNA diversity across
697 birds and mammals. BMC Evol. Biol. 9:54.
698 Patel, M. R., G. K. Miriyala, A. J. Littleton, H. Yang, K. Trinh, J. M. Young, S. R.
699 Kennedy, Y. M. Yamashita, L. J. Pallanck, and H. S. Malik. 2016. A
700 mitochondrial DNA hypomorph of cytochrome oxidase specifically impairs
701 male fertility in *Drosophila melanogaster*. eLife 5:e16923.
702 Pischedda, A. and A. Chippindale. 2005. Sex, mutation and fitness: asymmetric costs
703 and routes to recovery through compensatory evolution. J. Evol. Biol.
704 18:1115-1122.
705 Rand, D. M., R. A. Haney, and A. J. Fry. 2004. Cytonuclear coevolution: The
706 genomics of cooperation. Trends Ecol. Evol. 19:645-653.
707 Rogell, B., R. Dean, B. Lemos, and D. K. Dowling. 2014. Mito-nuclear interactions as
708 drivers of gene movement on and off the X-chromosome. BMC Genomics
709 15:330.
710 Schrider, D. R., D. Houle, M. Lynch, and M. W. Hahn. 2013. Rates and genomic
711 consequences of spontaneous mutational events in *Drosophila melanogaster*.
712 Genetics 194:937-954.
713 Shadel, Gerald S. and Tamas L. Horvath. 2015. Mitochondrial ros signaling in
714 organismal homeostasis. Cell 163:560-569.
715 Sharp, N. P. and A. F. Agrawal. 2008. Mating density and the strength of sexual
716 selection against deleterious alleles in *Drosophila melanogaster*. Evolution
717 62:857-867.
718 Sharp, N. P. and A. F. Agrawal. 2012. Evidence for elevated mutation rates in low-
719 quality genotypes. Proc. Natl. Acad. Sci. U. S. A. 109:6142-6146.

720 Sharp, N. P. and A. F. Agrawal. 2016. Low genetic quality alters key dimensions of
721 the mutational spectrum. PLoS Biol. 14:e1002419.
722 Shaw, F. H. and C. F. Baer. 2011. Fitness-dependent mutation rates in finite
723 populations. J. Evol. Biol. 24:1677-1684.
724 Smith, S., C. Turbill, and F. Suchentrunk. 2010. Introducing *Mother's curse*: Low
725 male fertility associated with an imported mtDNA haplotype in a captive
726 colony of brown hares. Mol. Ecol. 19:36-43.
727 Sniegowski, P. D., P. J. Gerrish, T. Johnson, and A. Shaver. 2000. The evolution of
728 mutation rates: separating causes from consequences. BioEssays 22:1057-
729 1066.
730 Sollunn, S. J. and Ö. Strömnæs. 1964. The effect of temperature during irradiation on
731 induced mutation frequency in *Drosophila melanogaster* sperm. Hereditas
732 51:10.1111/j.1601-5223.1964.tb01918.x.
733 Stewart, A. D., E. H. Morrow, and W. R. Rice. 2005. Assessing putative interlocus
734 sexual conflict in *Drosophila melanogaster* using experimental evolution.
735 Proc. R. Soc. Biol. Sci. Ser. B 272:2029-2035.
736 Vogel, E. W., R. L. Dusenbery, and P. D. Smith. 1985. The relationship between
737 reaction kinetics and mutagenic action of monofunctional alkylating agents in
738 higher eukaryotic systems: IV. The effects of the excision-defective mei-9L1
739 and mus(2)201D1 mutants on alkylation-induced genetic damage in
740 *Drosophila*. Mutat. Res. Fund. Mol. Mech. Mut. 149:193-207.
741 Wang, A. D. and A. F. Agrawal. 2012. Dna repair pathway choice is influenced by the
742 health of *Drosophila melanogaster*. Genetics 192:361-370.
743 Wolff, J. N., M. F. Camus, D. J. Clancy, and D. K. Dowling. 2015. Complete
744 mitochondrial genome sequences of thirteen globally sourced strains of fruit
745 fly (*Drosophila melanogaster*) form a powerful model for mitochondrial

research. Mitochondrial DNA:4672-4674.

Wolff, J. N., E. D. Ladoukakis, J. A. Enriquez, and D. K. Dowling. 2014. Mitonuclear interactions: Evolutionary consequences over multiple biological scales. Philos. Trans. R. Soc. Lond. B Biol. Sci. 369:10.1098/rstb.2013.0443.

Wolff, J. N., N. Pichaud, M. F. Camus, G. Côté, P. U. Blier, and D. K. Dowling. 2016a. Evolutionary implications of mitochondrial genetic variation: Mitochondrial genetic effects on OXPHOS respiration and mitochondrial quantity change with age and sex in fruit flies. J. Evol. Biol. 29:736-747.

Wolff, J. N., D. M. Tompkins, N. J. Gemmell, and D. K. Dowling. 2016b. Mitonuclear interactions, mtDNA-mediated thermal plasticity, and implications for the Trojan Female Technique for pest control. Sci. Rep. 6:30016.

Würgler, F. E. and P. Maier. 1972. Genetic control of mutation induction in *Drosophila melanogaster* I. Sex-chromosome loss in X-rayed mature sperm. Mutat. Res. Fund. Mol. Mech. Mut. 15:41-53.

Yee, W. K., K. L. Sutton, and D. K. Dowling. 2013. *In vivo* male fertility is affected by naturally occurring mitochondrial haplotypes. Curr. Biol. 23:R55-56.

Yee, W. K. W., B. Rogell, B. Lemos, and D. K. Dowling. 2015. Intergenomic interactions between mitochondrial and Y-linked genes shape male mating patterns and fertility in *Drosophila melanogaster*. Evolution 69:2876-2890.

767 **Table 1**. Test of F_0 hatch rate across six strains of *D. melanogaster* harboring distinct
768 mitochondrial haplotypes (ALS, BAR, ISR, MAD, SWE, ZIM) mated to irradiation-
769 mutagenized isogenic males. Mitochondrial effects: Results based on estimates using
770 contrast treatments, were the intercept term was set to *treatment:no* and mitochondrial
771 haplotype ALS. All parameters are contrasted against the intercept. The results
772 indicate that mitochondrial haplotypes BAR, MAD and ZIM are less affected by
773 mating with irradiated males than haplotypes ALS, ISR and SWE. Condition effects:
774 The intercept term was set to *treatment:no* and *condition:high*.

Experiment I: Mitochondrial effects	post.mean	l-95% CI	u-95% CI	pMCMC
Intercept	1.19	1.08	1.3	<0.001
Haplotype BAR	-0.24	-0.4	-0.09	0.004
HaplotypeI SR	-0.59	-0.74	-0.44	<0.001
Haplotype MAD	-0.56	-0.72	-0.42	<0.001
Haplotype SWE	-0.05	-0.2	0.102	0.52
Haplotype ZIM	-0.59	-0.74	-0.442	<0.001
Treatment Yes	-1.42	-1.55	-1.3	<0.001
Haplotype BAR:treatment yes	0.21	0.041	0.38	0.016
Haplotype ISR:treatment yes	0.02	-0.16	0.19984	0.881
Haplotype MAD:treatment yes	0.4	0.22	0.57	<0.001
Haplotype SWE:treatment yes	0.02	-0.17	0.19	0.827
Haplotype ZIM:treatment yes	0.31	0.13	0.46	<0.001
Random effects				
Duplicate variance	0.002	$5.48*10^{-11}$	0.007	-
Residual variance	0.008	0.0012	0.015	-
Experiment I: Condition effects				
Intercept	1.09	0.32	1.68	0.02
Condition low	-0.47	-1.19	0.4	0.11
Treatment yes	-1.33	-2.06	-0.51	0.02
Condition low:treatment yes	0.145	-1.22	1.45	0.63
Random effects				
Haplotype [Treat. no]	0.022	$2.36*10^{-13}$	0.07	-
Haplotype [Treat. yes]	0.07	$5.41*10^{-5}$	0.22	-
Duplicate	0.002	$1.50*10^{-9}$	0.007	-
Residual variance	0.008	$1.5*10^{-2}$	0.016	-

775

776 **Table 2**. Test of F_1 hatch rate across six strains of *D. melanogaster* harboring distinct
777 mitochondrial haplotypes (ALS, BAR, ISR, MAD, SWE, ZIM) mated to irradiation-
778 mutagenized isogenic males in F_0. Mitochondrial effects: Results based on estimates
779 using contrast treatments, were the intercept term was set to *treatment:no* and
780 mitochondrial haplotype ALS. Condition effects: The intercept term was set to
781 *treatment:no* and *condition:high*. All parameters are contrasted against the intercept.
782 Analyses indicate significant effects of mitochondrial haplotype and F_0 irradiation
783 treatment on hatch rate, but that these effects are not involved in any interactions with
784 the sex or condition of focal flies.

Experiment 2: Mitochondrial effects	post.mean	l-95% CI	u-95% CI	pMCMC
Intercept	1.25	1.14	1.38	<0.001
Treatment yes	-0.5	-0.58	-0.42	<0.001
Haplotype BAR	-0.13	-0.28	0.058	0.13
Haplotype ISR	-0.64	-0.81	-0.47	<0.001
Haplotype MAD	-0.39	-0.55	-0.23	<0.001
Haplotype SWE	-0.11	-0.28	0.065	0.2
Haplotype ZIM	-0.31	-0.49	-0.15	0.006
Random effects				
Duplicate variance	0.0025	$2.22*10^{-8}$	0.0084	
Residual variance	0.058	0.04	0.077	

Experiment 2: Condition effects	post.mean	l-95% CI	u-95% CI	pMCMC
Intercept	1.14	0.99	1.28	<0.001
Condition low	-0.36	-0.49	-0.22	<0.001
Treatment yes	-0.47	-0.62	-0.3	<0.001
Sex M	0.02	-0.05	0.1	0.63
Random effects				
Haplotype [Treat. yes:Sex F]	0.009	$5.43*10^{-9}$	0.036	-
Haplotype [Treat. yes:Sex m]	0.044	$4.38*10^{-9}$	0.16	-
Haplotype [Treatment no]	0.024	$6.29*10^{-7}$	0.07	-
Duplicate[Treat. yes:Sex F]	0.0036	$8.44*10^{-10}$	0.014	-
Duplicate[Treat. yes:Sex M]	0.015	$7.01*10^{-11}$	0.059	-
Duplicate [Treat. no]	0.0023	$1.83*10^{-9}$	0.01	-
Residual [Treat. no: Sex F: Cond High]	0.006	$2.16*10^{-4}$	0.018	-
Residual [Treat. y: Sex F: Cond High]	0.014	$1.87*10^{-4}$	0.0384	-
Residual [Treat. no: Sex M: Cond High]	0.007	$2.22*10^{-4}$	0.024	-
Residual [Treat. y: Sex M: Cond High]	0.37	0.17	0.62	-
Residual [Treat. no: Sex F: Cond low]	0.0034	$2.22*10^{-4}$	0.01	-
Residual [Treat. y: Sex F: Cond low]	0.084	0.026	0.15	-
Residual [Treat. no: Sex M: Cond low]	0.0033	$1.53*10^{-4}$	0.01	-
Residual [Treat. y: Sex M: Cond low]	0.16	0.054	0.29	-

785

786

787 **Figures**

788

789 **Figure 1**. The effect of mitochondrial haplotype and irradiation treatment on F_0 hatch
790 rate. Hatch rate was determined across six isogenic fly strains bearing six distinct
791 mitochondrial haplotypes (ALS, BAR, ISR, MAD, SWE, ZIM), and where females of
792 the isogenic strains were mated to irradiation-mutagenized males of the isogenic w^{1118}
793 control strain (Fig. S2). Differences in DNA repair manifest as interactions between
794 haplotype and irradiation treatment. Black lines denote Low condition haplotypes and
795 red lines denote High condition haplotypes.

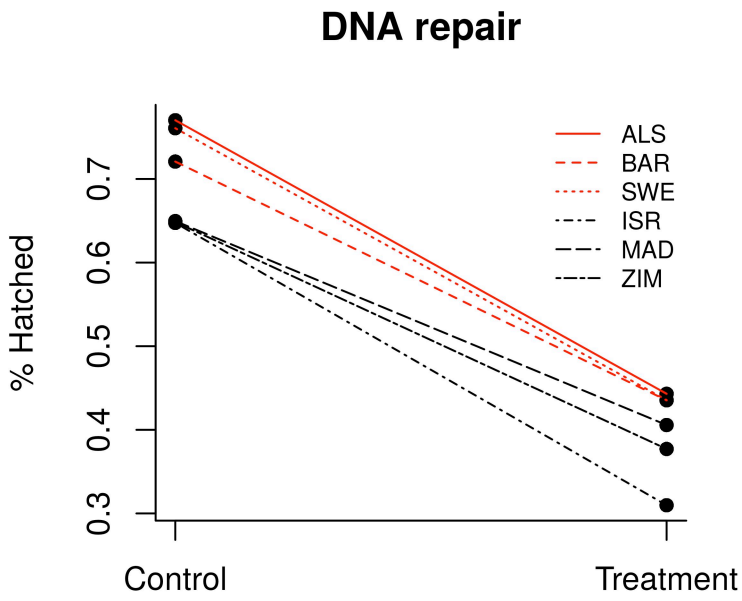

796

797

798

799

800

801

802 **Figure 2**. The effect of mitochondrial haplotype and irradiation treatment on F_1 hatch
803 rate. Hatch rate was determined for groups of mutagenized male or female F_1
804 offspring bearing six distinct mitochondrial haplotypes (ALS, BAR, ISR, MAD,
805 SWE, ZIM) and that were mated to untreated flies of the opposite sex sourced from
806 the isogenic w^{1118} control strain (Fig. S3). Black lines denote Low condition
807 haplotypes and red lines denote High condition haplotypes.

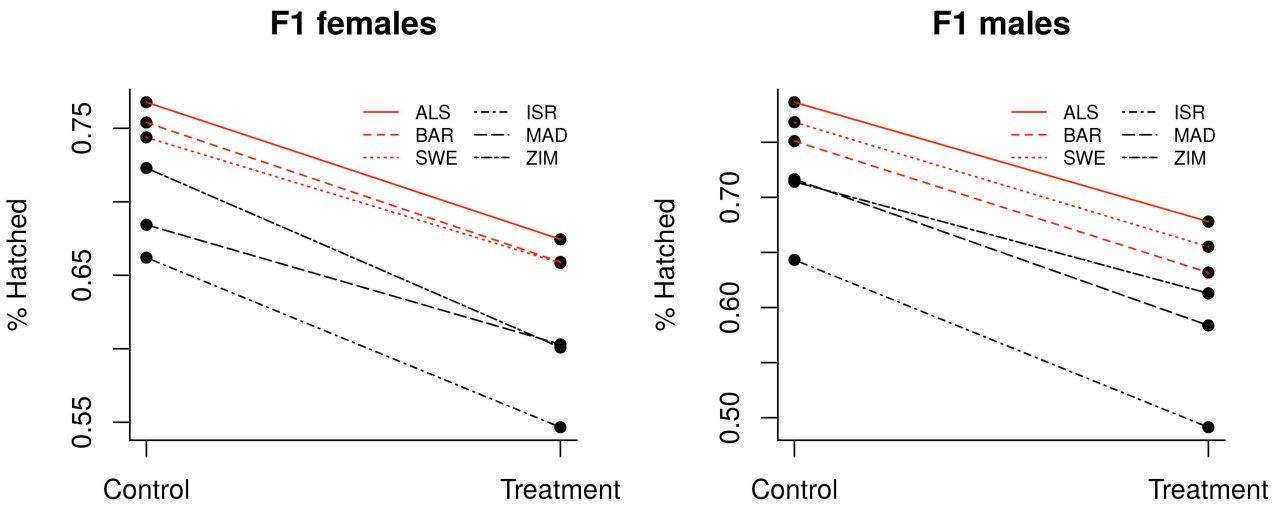

808
809
810
811
812
813
814
815
816
817

818 **Figure 3**. The effect of mitochondrial haplotype and irradiation treatment on variation
819 in F_1 hatch rate. Variation in hatch rate for groups of mutagenized female or male F_1
820 offspring bearing six distinct mitochondrial haplotypes (ALS, BAR, ISR, MAD,
821 SWE, ZIM) mated to untreated flies of the opposite sex sourced from the isogenic
822 w^{1118} control strain (Fig. S3). Black lines denote Low condition haplotypes and red
823 lines denote High condition haplotypes.

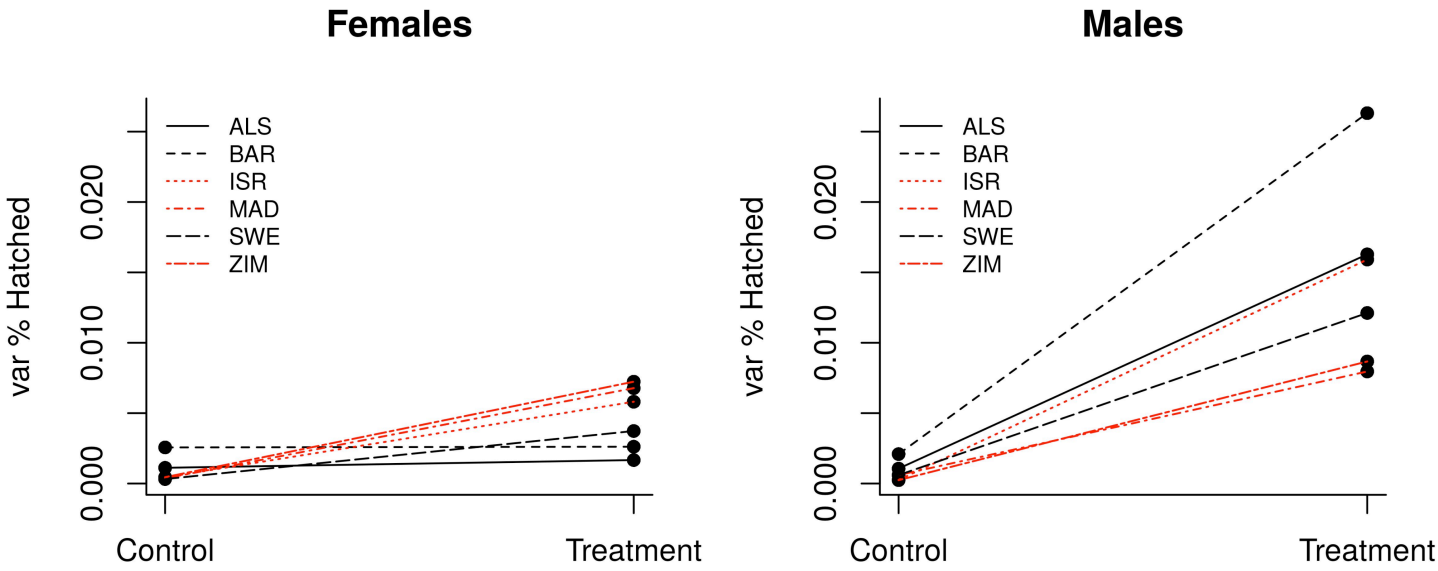

824
825
826
827
828
829
830
831
832

833 **Supplementary Material**

834

835

836

837

838

839

840

841

842

843

844

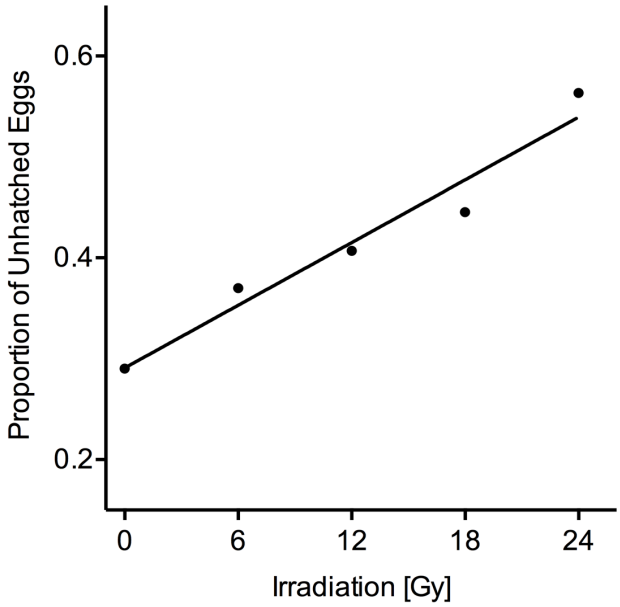

845

846 **Figure S1**: The effect of irradiation on the proportion of unhatched eggs of

847 *Drosophila melanogaster* w^{1118} females mated to w^{1118} males exposed to increasing

848 irradiation dosage.

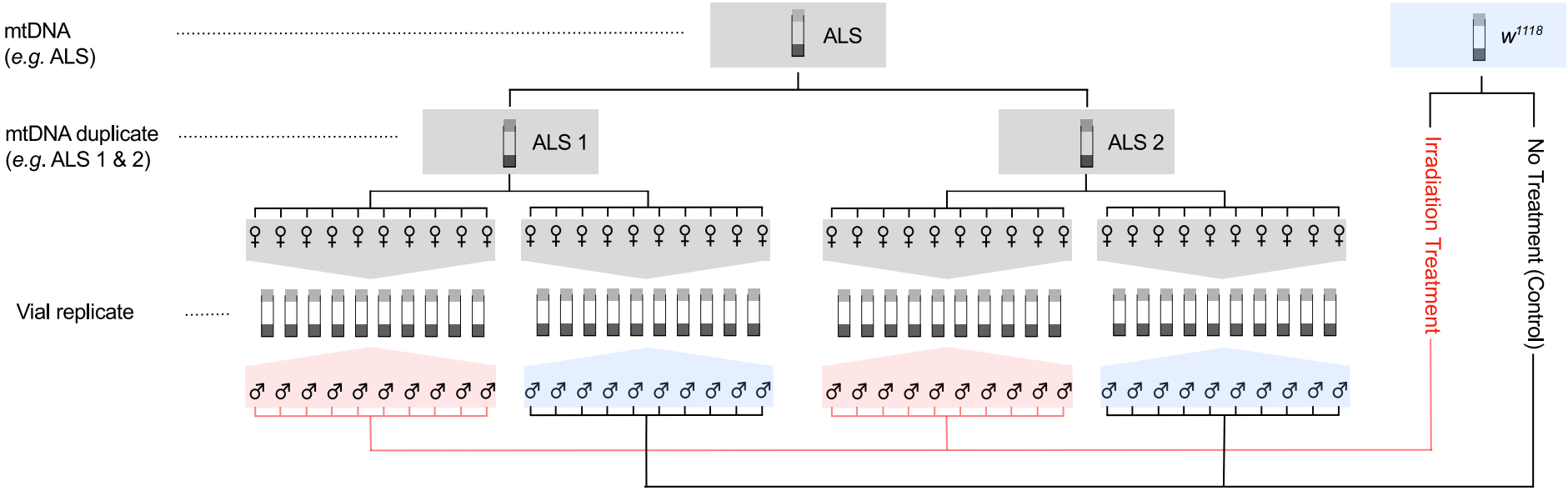

Figure S2: Experimental breeding scheme for the F_0 generation. Mitochondrial strains (Alstonville [ALS], Barcelona [BAR], Israel [ISR], Madang [MAD], Sweden [SWE], Zimbabwe [ZIM]) were maintained in independent duplicates since 2007 (*e.g.* ALS 1 & 2). For each line duplicate, we collected 300 virgin females for 10 replicates with 15 virgin females each for both the control and treatment cohort. To each of the replicates containing 15 virgin females, we added 15 w^{1118} virgin males (irradiated for treatment group, non-irradiated for control group), and allowed flies to mate for 24 hours before commencement of F_0-ovipositioning.

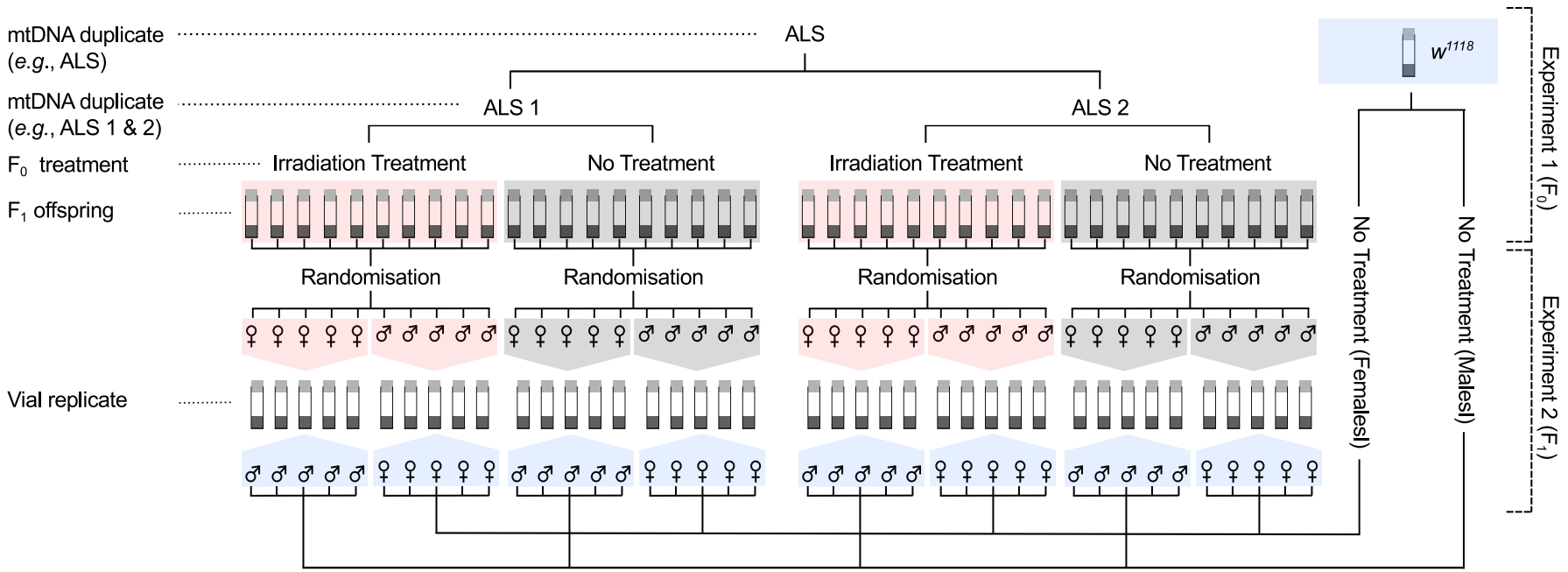

Figure S3: Experimental breeding scheme for the F_1 generation. 50% of eggs ovipositioned by the F_0 generation (see also Figure S1) were left to develop until eclosion for both duplicates of each of six mitochondrial strains (Alstonville [ALS], Barcelona [BAR], Israel [ISR], Madang [MAD], Sweden [SWE], Zimbabwe [ZIM]). For each line duplicate, we collected 150 virgin females and 150 virgin males, and after randomization of these flies within each cohort and sex, we established 5 replicates for each sex containing 15 virgin flies for both the control and treatment cohort. Each vial was then supplemented with 15 virgin flies of the opposite sex sourced from the isogenic w^{1118} strain. All populations were allowed to mate for 24 hours before commencement of F_1-ovipositioning.