Design Principles of Lambda's Lysis/lysogeny Decision vis-a-vis Multiplicity of Infection

Dinkar Wadhwa*

Department of Chemical Engineering

Indian Institute of Technology Bombay, Mumbai - 400 076, India

dinkar.wadhwa84@gmail.com

*The author is not currently affiliated with the institution.

Abstract

Bacteriophage lambda makes lysis/lysogeny decision based on the number of coinfecting phages, viz. the multiplicity of infection (MoI): lysis at low MoI; lysogeny at high MoI. Here, by constructing an expression for quality of the lysis/lysogeny switching behaviour which, besides another thing, demands high equilibrium concentration of Cro-like protein (Lyt) and low equilibrium concentration of CI-like protein (Lys) - that is, lytic decision - at MoI of 1, and vice versa - that is, lysogeny decision - at MoI of 2, for various models which could potentially generate the switching behaviour, and evaluating their deterministic and stochastic properties, I demonstrate that lambda's lysis/lysogeny decision is based on three features, viz. a) mutual repression, b) cooperative positive autoregulation of *cI*, and c) cooperative binding of activator protein, not basal expression, triggering positive feedback loop formed by autoregulation of *cI*. The quasi-minimal two-protein model is justified by showing its qualitative equivalence, except for the Cro repression of *pRM*, to lambda's gene regulatory network responsible for lysis/lysogeny decision. A three-protein simplified version of lambda's switch is shown to possess all the three design features. Existence of bistability at MoI of 1 and 2, respectively, confer lysogen stability and lytic development's stability.

Keywords: Bacteriophage λ, switch, positive feedback, bistablity

1. Introduction

Whereas virulent bacteriophages possess only one method of reproduction, viz. lytic strategy, temperate bacteriophages have a dual perpetuation strategy, viz. lytic and lysogeny. In lytic strategy, phage injects its genetic material into the bacterial host, viral genes are transcribed, mRNAs thus produced are translated, and phage's genetic material is replicated. Finally, the bacterium undergoes lysis, releasing progeny particles. In lysogeny, lytic pathway is repressed,

viral genome is integrated into the bacterial chromosome, and thereby the virus exists in a latent state known as prophage. As the teleological explanation goes, lytic strategy leads to fast multiplication but is risky because viral progenies have to find new hosts which don't already contain lysogenized phages. On the other hand, a lysogenized phage replicates along with its host and thus reproduces slowly as compared to lytic strategy, but this way phage safeguards its survival. Should a phage infect a bacterium containing lysogenized phage, lambda repressors (CI) present in the cytosol will not allow expression from promoter *pR*.

Being one of the simplest organisms to make a genetic decision, viz. to choose between lysis and lysogeny, bacteriophage lambda is a paradigm for gene regulation and developmental decision. Extensive study of the phage's core genetic network involved in the lysis/lysogeny decision has yielded a complex picture of interconnected feedback loops [1]. A classic [2] and a molecular study [3] have shown that the lysis/lysogeny decision depends upon multiplicity of infection (MoI). Avlund et al. [4] analysed Kourilsky's data [2,5] and determined the probability of lysogeny at MoI of 1 to be almost zero, at MoI of 2 to be around 0.6960, and at all higher MoIs to be around 0.9886. This ability of the phage to choose between lysis and lysogeny based on the number of coinfecting phages is but a form of quorum sensing occurring inside a bacterium.

One of the first theoretical studies of lambda's decision with respect to multiplicity of infection considered a model which possessed two proteins, viz. Cro and CI, and promoters *pR* and *pRM*, and a simplified model of phage's gene regulatory network (GRN) which possessed three critical proteins, viz. Cro, CI, and CII, and three promoters, viz. *pR*, *pRM*, and *pRE* [6]. For the two-protein model, it was shown that if basal expression of *cro-like* gene exceeds that of *cI-like* gene, one stable state exists at lower and higher MoIs, dominated by Cro-like protein and CI-like protein, respectively; whereas, bistability is present for the intermediate MoIs. Additionally, it was demonstrated that positive autoregulation of *lys* and protein dimerization are necessary requirements to generate the switching behaviour. For the three-protein model, the work showed that the transient level of CII increases with MoI, and past a certain threshold, the nonlinearity of positive feedback loop, formed by positive autoregulation of *cI*, gives rise

to the switching behaviour in terms of equilibrium values of the three proteins.

In this study, I obtain a two-protein quasi-minimal model for lambda's GRN; and additionally, construct other two-protein models based on certain departures from the quasi-minimal model. A three-protein simplified model of lambda's GRN, which differed slightly from the one studied in an aforementioned study [6], when selected for an additional feature, viz. of producing bistability at MoI of 2, reveals design principles of the lysis/lysogeny switch.

2. Result and Discussion

2.1. Quasi-minimal two-protein lysis/lysogeny switch

In the quasi-minimal two-protein model, promoter of *lyt* gene is constitutive; whereas, that of *lys* gene is positively regulated as they are in lambda's GRN. The roles of Lys in the quasi-minimal two-protein model; that is, binding cooperatively to the intergenic region, activating transcription of its own gene, and inhibiting transcription of *lyt* gene, are identical to those of CI in lambda's GRN; that is, activating promoter *pRM* and repressing promoter *pR*. The role of Lyt was conceptualized from first principle in the following way. At MoI of 2, equilibrium concentrations of Lyt should be much higher than that of Lys; whereas, opposite should be the case at MoI of 1. However, if Lyt did not affect *lys* promoter, assuming no basal expression of *lys*, which is a weak promoter anyway [7,8], equilibrium concentration of Lyt at MoI 2 would be even higher, let alone much lower, than that at MoI of 1. And equilibrium concentration of Lys would be very low, instead of being high enough to repress *lyt*, at MoI of 2. Because the only protein present to actuate any process at MoI of 2 is Lyt, it was argued that Lyt should engender lysogeny and inhibit lytic pathway at MoI of 2.

Thus, Lyt activates transcription of *lys* (whose product causes lysogeny), represses transcription of its own gene, thereby suppressing lytic pathway (though, as argued below, the last interaction is dispensable), and activates imaginary downstream pathway which leads to lytic development. This seemingly paradoxical role of Lyt, as explained below, is due to it being proxy for CII, which causes lysogeny, and anti-termination factor Q, which enables transcription of lytic

genes. The positive feedback loop formed by transcriptional activation of *lys* by its own protein causes Lys to be produced to low concentration at MoI of 1 and high concentration at MoI of 2. Thus, at MoI of 1, Lyt's equilibrium concentration is high because it is constitutively produced and that of Lys is not high enough to repress *lyt*. On the other hand, at MoI of 2, Lyt's equilibrium concentration is low because of inhibition of *lyt* by Lys, which is present in high concentration.

Because the expression for quality of the lysis/lysogeny switch (the "switching quotient") takes equilibrium values into account, value of degradation constant of X (concentration of Lyt) can be subsumed into k_1 and k_3, and that of Y (concentration of Lys) can be subsumed into k_4. Hence, k_2 and k_5 are taken to be unity for all of the two-protein models. This model would henceforth be referred to as 1A_Lyt_Lys.

1A_Lyt_Lys:

$$\frac{dX}{dt} = \frac{mk_1}{1 + \frac{X^a}{K_{D1}} + \frac{Y^b}{K_{D2}}} - k_2 X \tag{1}$$

$$\frac{dY}{dt} = \frac{m(k_3 \frac{X^a}{K_{D1}} + k_4 \frac{Y^b}{K_{D2}})}{1 + \frac{X^a}{K_{D1}} + \frac{Y^b}{K_{D2}}} - k_5 Y \tag{2}$$

where, m is multiplicity of infection; k_1 is basal expression rate of *lyt*; k_3 and k_4 are rate constants for transcriptional activation of *lys* by Lyt and Lys, respectively. K_{D1} and K_{D2} are the "combined" dissociation constants of Lyt and Lys, respectively (see Methods). In those models in which *lys* has basal expression, k_3 represents basal expression rate. Exponents a and b are Hill coefficients for binding of Lyt and Lys, respectively.

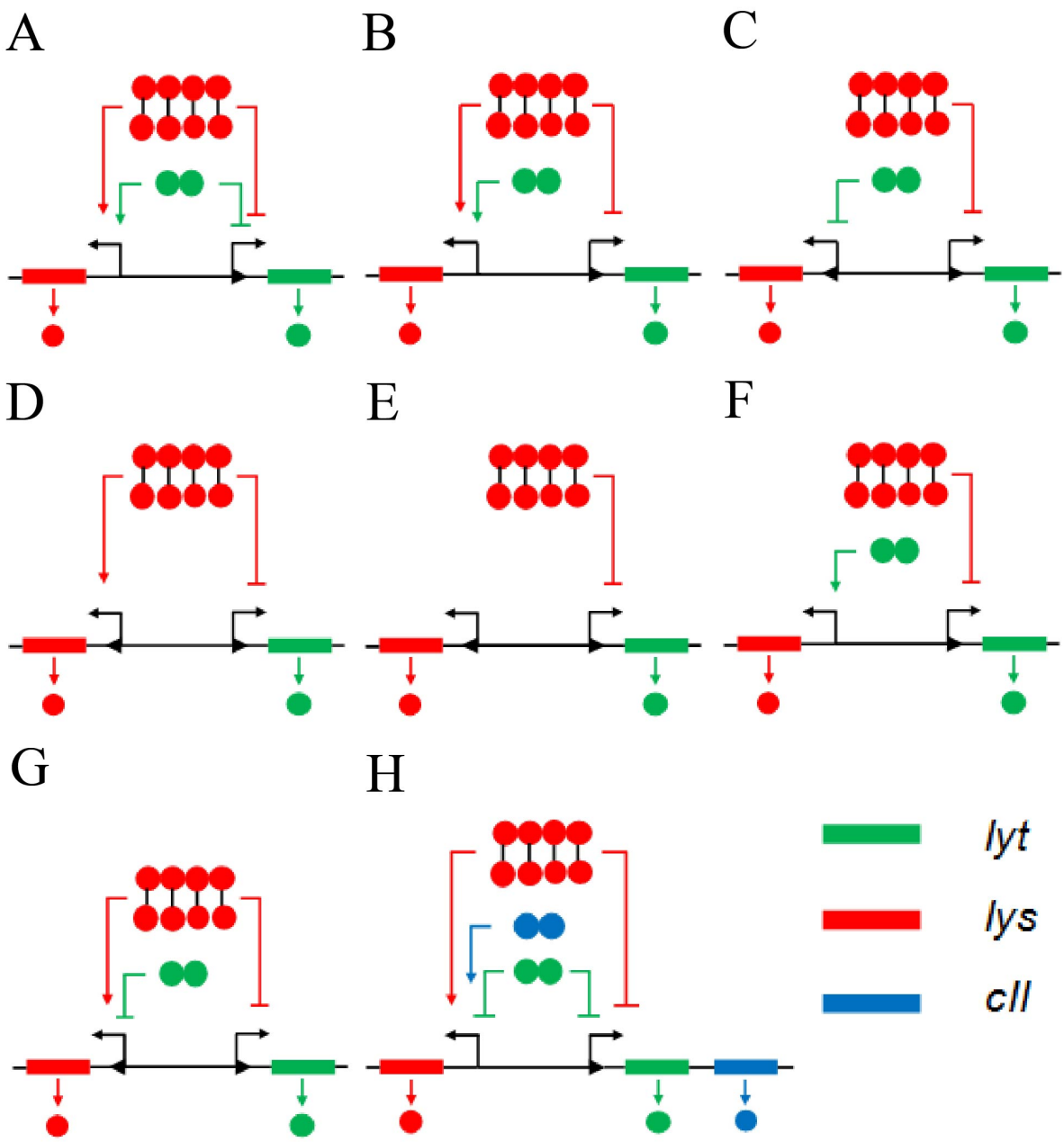

Figure 1: Various two-protein models, and the three-protein model. Lower arrowhead represents basal expression. (**A**) The quasi-minimal model or 1A_Lyt_Lys. (**B**) 1A_Lyt_Lys with self-repression of *lyt* removed, or 1B_Lyt_Lys. (**C**) Mutual repression or 2_Lyt_Lys. (**D**) 3_Lyt_Lys. (**E**) 4_Lyt_Lys. (**F**) 5_Lyt_Lys. (**G**) 6_Lyt_Lys. (**H**) A three-protein simplified version of lambda's switch or Lyt_Lys_CII.

2.2. Equivalence of the quasi-minimal two-protein model (1A_Lyt_Lys) with lambda's GRN

Upon infection, RNA polymerase transcribes from constitutive promoters, *pL* and *pR*, leading to transciption of *N* and *cro* genes, respectively, till it encounters transcription terminators *tL1* and *tR1*, respectively [9]. The product of the *N* gene is an anti-termination factor that modifies subsequent RNAPs initiating at *pL* and *pR* so that they move past their respective terminators and transcribe *cIII* and *cII* genes, respectively [10,11]. Such an RNAP from *pR* is also able to transcribe through another terminator, *tR2*, present upstream of gene *Q* (see figure 2). Up to this point, the lytic and lysogenic pathway are identical. Commitment to lytic occurs in the following way. Extended transcription from *pR* results in transcription of gene *Q*. Q, being an anti-termination factor, causes transcription from the strong constitutive promoter *pR'* to not terminate, as it would otherwise do, at *tR*', which is present at about 200 bases away from *pR'*, thereby allowing transcription of the rest of the lytic genes downstream of *Q* [12]. Once this happens, the cell is committed to lysis. CIII protein has an indirect role in causing lysogeny, viz. that of preventing degradation of CII by bacterial protease HflB [13,14]. The (indirect) role of cIII will not be taken into consideration in the current work which investigates the decision-making process of lambda through minimalist models.

Commitment to lysogeny occurs when CII is produced to a concentration which is sufficient to activate transcription from three promoters: *pI*, *pRE*, and *pAQ*. Promoter *pI* transcribes *int* gene [15], required for the integration of phage genome into that of the host bacterium. Transcript produced from *pRE* contains orf for *cI*; therefore, activation of this promoter leads to production of CI [16]. CII inhibits commitment to lytic by activating transcription from *pAQ*, which is located within *Q* gene in the opposite polarity [17,18]. The transcript thus produced, being antisense to (a part of) *Q* mRNA, hybridizes with the latter, thereby preventing the translation of *Q* mRNA, which is essential for commitment to lytic [3]. In lambda's GRN, *cro*, *cII*, and *Q* are under the control of promoter *pR*. Because in 1A_Lyt_Lys *lyt* is transcribed from *pR*, Lyt protein should ideally be functionally equivalent to Cro, CII, and Q. Repression of

pR by Cro is represented by negative autoregulation of *lyt*. Lyt protein activating transcription of *lys* is equivalent to CII activating promoters *pI* and *pRE*.

In order to model inhibition of lytic pathway due to transcriptional activation from *pAQ* by CII, three variables, viz. *Q* mRNA produced from *pR*, Q protein, and mRNA produced from *paQ*, are required to be added to the two-protein model. That is avoided here in the spirit of minimalism. However, it can be argued that CII inhibition of Q's production can be subsumed into Lys inhibition of *lyt*. CII inhibition of Q's production is required at MoI of 2, where lysogeny is constrained to occur in the present study. If kinetic intricacy of CII inhibition of Q's production is ignored, the process can be subsumed into repression by CI, whose production is engendered by CII, of transcription from *pR*, under whose control *Q*'s transcription lies. Given that the current study takes into account equilibrium concentrations of proteins, kinetic intricacy of CII inhibition of Q's production may be ignored, arguably. This assumption becomes stronger in the light of experimental result that, as compared to CI, CII has very low impact in reducing the production of Q [3]. In a strain lacking *cI* gene (λcI^{-}), it was demonstrated that the level of Q protein, reported by GFP expressed from pR'-tR'-*gfp* promoter-terminator fusion, shows al most no change as a function of MoI. In the quasi-minimal model, CI repression of *pR* is modelled by Lys repression of *lyt*.

Notably, while Cro in lambda's GRN inhibits transcription from promoter *pRM*, Cro-like protein (Lyt) activates the expression of *lys* gene in 1A_Lyt_Lys. It will be shown later that inhibition of *lys* (or *pRM*) by Lyt (or Cro) is required for the stability of lytic development (hence, 1A_Lyt_Lys is a quasi-minimal, not minimal, model); that is, to prevent lysogeny which would otherwise occur as a result of increase in MoI due to genome replication soon after committment to lysis. If CII is not produced in sufficient amount, *Q* mRNA is translated and anti-terminator Q thus produced causes lysis. The quasi-minimal model incorporates this process in this way: if Lyt's concentration doesn't become high enough to be able to trigger the positive feedback loop (triggering which leads to production of Lys in high amount, which causes inhibition of transcription of *lyt*), Lyt gets produced in sufficient concentration and commitment to lytic ensues. Lyt activating transcription from *lys* and thereby obviating its

need to have basal expression is more or less realistic because transcription from *pRE*, when activated by CII, is much higher than the basal expression of *pRM*. Schmeissner et al. showed that transcription from *pRE* promoter, when activated by CII, was roughly 3 times higher than the basal expression of *pR* [16], which, as mentioned earlier, is a much stronger promoter than *pRM*.

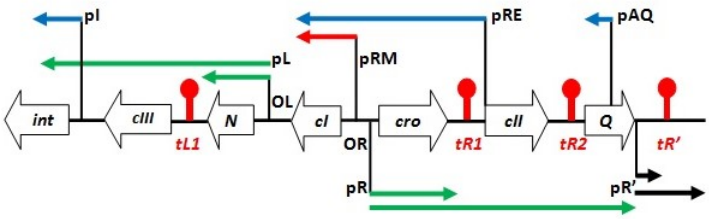

Figure 2: Gene and transcription map of lambda. Transcripts that are produced earliest, viz. from *pL* and *pR* promoters, are depicted as green arrows. The black arrow is the late transcript, viz. from *pR'*. Transcripts from CII-activated promoters, viz. *pI*, *pRE*, and *pAQ*, are shown as blue arrows. Transcript from *pRM*, which is activated by CI, is shown as a red arrow. Transcription terminators, namely *tL1*, *tR1*, and *tR2*, are depicted in red.

2.3. Variants of 1A_Lyt_Lys and mutual repression model

In order to understand design features underlying the lysis/lysogeny switch, I considered variants of 1A_Lyt_Lys and mutual repression model, and a model having the features of 1A_Lyt_Lys and mutual repression model. Because two features, viz. constitutive expression of *lyt* and its inhibition by Lys, are present in all of them, they would not be mentioned in the description of the models below. A model either had Lyt activation of *lys*, a feature equivalent to the positive regulation of *cI*, or basal expression of *lys*, a feature of mutual repression motif. All of these models can be categorized in terms of three factors, as shown in the Table 1. First column shows whether *lys* possesses basal expression or is activated by Lyt. Second column shows if positive feedback, formed by transcriptional activation of *lys* by its own product, is present. Third column shows if inhibition of *lys* by Lyt, ultimately forming mutual repression motif, is present. Inhibition of *lys* by Lyt can only be present when *lys* possesses basal expression. Therefore, for *lys* having basal expression, there are four models; and where it gets activated

by Lyt, there are two models.

Table 1: Classification of additional two-protein models.

Model	Basal expression of *lys*/ Activation of *lys* by Lyt	Activation of *lys* by Lys	Inhibition of *lys* by Lyt
1B_Lyt_Lys	Activation	Yes	N/A
5_Lyt_Lys	Activation	No	N/A
3_Lyt_Lys	Basal	Yes	No
6_Lyt_Lys	Basal	Yes	Yes
4_Lyt_Lys	Basal	No	No
2_Lyt_Lys	Basal	No	Yes

1B_Lyt_Lys: This model differs from 1A_Lyt_Lys only in not having negative autoregulation of *lyt*, which represents repression of *pR* by Cro in lambda's GRN. As previously, kinetic detail of Cro repression of *pR* may be ignored. Because Cro repression of *pR* reduces equilibrium concentrations of proteins whose genes are under the control of *pR*, it can be done away with at MoI of 1 while making sure that equilibrium concentrations of proteins whose genes are under the control of *pR* remain unaffected. That can be achieved by readjusting the kinetic parameters associated with transcription from *pR*, translation and degradation of the resulting mRNAs, and degradation of proteins produced from those mRNAs. In the same way, Cro repression of *pR* at MoI of 2 is dispensable because CI performs the same function and much more strongly than Cro because the former is present in much higher concentration and the latter, being under the control of *pR* itself, cannot repress the promoter fully.

$$\frac{dX}{dt} = \frac{mk_1(1 + \frac{X^a}{K_{D1}})}{1 + \frac{X^a}{K_{D1}} + \frac{Y^b}{K_{D2}}} - k_2 X \tag{3}$$

$$\frac{dY}{dt} = \frac{m(k_3 \frac{X^a}{K_{D1}} + k_4 \frac{Y^b}{K_{D2}})}{1 + \frac{X^a}{K_{D1}} + \frac{Y^b}{K_{D2}}} - k_5 Y \tag{4}$$

2_Lyt_Lys (Mutual repression): Lyt represses *lys*, which has basal expression.

$$\frac{dX}{dt} = \frac{mk_1(1 + \frac{X^a}{K_{D1}})}{1 + \frac{X^a}{K_{D1}} + \frac{Y^b}{K_{D2}}} - k_2 X \tag{5}$$

$$\frac{dY}{dt} = \frac{mk_3(1 + \frac{Y^b}{K_{D2}})}{1 + \frac{X^a}{K_{D1}} + \frac{Y^b}{K_{D2}}} - k_5 Y \tag{6}$$

3_Lyt_Lys: *lys* has basal expression and is activated by Lys cooperatively.

$$\frac{dX}{dt} = \frac{mk_1}{1 + \frac{Y^b}{K_{D2}}} - k_2 X \tag{7}$$

$$\frac{dY}{dt} = \frac{m(k_3 + k_4 \frac{Y^b}{K_{D2}})}{1 + \frac{Y^b}{K_{D2}}} - k_5 Y \tag{8}$$

4_Lyt_Lys: *lys* has basal expression.

$$\frac{dX}{dt} = \frac{mk_1}{1 + \frac{Y^b}{K_{D2}}} - k_2 X \tag{9}$$

$$\frac{dY}{dt} = mk_3 - k_5 Y \tag{10}$$

5_Lyt_Lys: *lys* is activated by Lyt.

$$\frac{dX}{dt} = \frac{mk_1(1 + \frac{X^a}{K_{D1}})}{1 + \frac{X^a}{K_{D1}} + \frac{Y^b}{K_{D2}}} - k_2 X \tag{11}$$

$$\frac{dY}{dt} = \frac{mk_3 \frac{X^a}{K_{D1}}}{1 + \frac{X^a}{K_{D1}} + \frac{Y^b}{K_{D2}}} - k_5 Y \tag{12}$$

6_Lyt_Lys: *lys* has basal expression, is activated by Lys and inhibited by Lyt. Notably, adding self-repression of *lyt* to this model makes it identical to the two-protein model of Weitz et al. [6].

$$\frac{dX}{dt} = \frac{mk_1(1 + \frac{X^a}{K_{D1}})}{1 + \frac{X^a}{K_{D1}} + \frac{Y^b}{K_{D2}}} - k_2 X \tag{13}$$

$$\frac{dY}{dt} = \frac{m(k_3 + k_4 \frac{Y^b}{K_{D2}})}{1 + \frac{X^a}{K_{D1}} + \frac{Y^b}{K_{D2}}} - k_5 Y \tag{14}$$

2.4. Deterministic simulation

The models were evaluated in terms of the quality of switch they generated, by solving their defining equations. For a given set of Hill coefficients (a and b), a set of rate constants and dissociation constants would henceforth be referred to as parameter set (that is, Hill coefficients are not a part of parameter set here). Because Cro forms dimer, Hill coefficient for Lyt's binding was taken to be 2; whereas, because CI forms tetramer, Hill coefficient for Lys' binding was taken to be 4. However, in the interest of completeness, another set of Hill coefficients, viz. a=2, b=2, was also considered. The rate constants and dissociation constants of equations defining a given model were searched (see Methods) in two stages: order search and linear search (as they are called here). Parameter search was guided by the quality of switch, viz. switch quotient (as it is called here), generated by them. Switch quotient was initially considered to be determined by the expression

$$SQ = \frac{(S_1 - S_2)}{S_1}$$

S_1 = min{Lyt at MoI of 1, Lys at MoI of 2}

S_2 = max{Lys at MoI of 1, Lyt at MoI of 2}

The expression, however, selected parameter sets which gave equilibrium values of Lyt at MoI of 1 unequal to those of Lys at MoI of 2. From the perspective of simplicity, I believe that the difference between the two should be minimum; therefore, the previous expression is multiplied by ratio of S_1 to S_3 in order to penalize the difference between S_3 and S_1.

$$SQ = \frac{(S_1 - S_2)}{S_1} \cdot \frac{S_1}{S_3} = \frac{(S_1 - S_2)}{S_3}$$

S_3 = max{Lyt at MoI of 1, Lys at MoI of 2}

This expression, like the previous one, varies between 0 and 1. Only those parameter sets were considered that gave positive switch quotients (SQ). Switch quotients generated in the deterministic simulations are called deterministic switch quotient (DSQ).

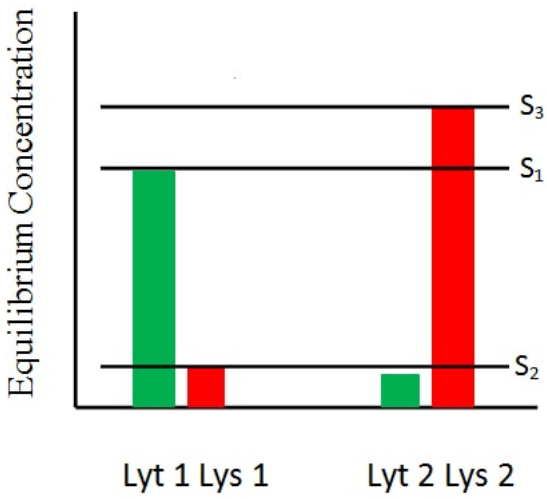

Figure 3: Schematic of the switching behaviour.

Parameter sets, though not all of them, of only 2_Lyt_Lys and 6_Lyt_Lys exhibited bistability at both the MoIs. Therefore, for these two models, those parameter sets which did not exhibit

bistability at both the MoIs were discarded for all purposes. For rest of the models, those parameter sets which did not exhibit bistability at MoI of 1 were discarded for all purposes (this way only one parameter set, viz. of 1B_Lyt_Lys, was discarded). As Table 2 shows, all of the models possessing the positive feedback loop have average DSQ of more than 0.97 for both sets of Hill coefficients (lowest DSQ among all the models in this category was 0.9270). Mutual repression model for Hill coefficients' set of a=2, b=2 has only one parameter set, with DSQ of 0.6666; and, for that of a=2, b=4 average DSQ was 0.9746 (lowest DSQ was 0.9362). 4_Lyt_Lys for Hill coefficients' set of a=2, b=2 gives DSQs of 0.4794 and 0.4707; and, for that of a=2, b=4 both DSQs were almost 0.5. DSQs of 4_Lyt_Lys being around 0.5 can be explained by the fact that increase in genome copy number for this model leads to proportional increase in equilibrium activity of *lys* promoter, thereby causing the value of Lys at MoI of 1 to be half its value at MoI of 2.

The model 5_Lyt_Lys did not generate any parameter set. The reason is that in the absence of positive autoregulation of *lys*, *lyt* needs to have strong basal expression in order to sustain high concentration of Lys, whose gene is activated by Lyt, at MoI of 2. That is, Lyt, too, is expressed in high concentration at MoI of 2. Equivalently, the desired high concentration of Lyt at MoI of 1 also leads to excessive production of Lys at the same MoI. Thus, the two proteins are present in similar amounts at both the MoIs. In hindsight, one notes that the defining equations for Lyt and Lys are almost identical for this model.

In order to examine the significance of cooperativity in positive feedback here, another set of Hill coefficients, viz. a=2, b=1, was considered for all models possessing positive feedback loop. Highest DSQ for 1A_Lyt_Lys: 0.1262; 1B_Lyt_Lys: 0.1150; 3_Lyt_Lys: 0.0001; 6_Lyt_Lys: ≈ 0. Extremely low values of highest DSQs generated by this set of Hill coefficients underscores the absolute necessity of cooperative binding of Lys.

Table 2: Average and SD of deterministic and stochastic switch quotients for a given range of stochastic success rate for time length of 100 arb. units

Model	**AVG Deterministic SQ (SD)**		**AVG Deterministic SQ (SD) (SSR[a] $\geqslant$ 95)**		**AVG Stochastic SQ (SD) (SSR $\geqslant$ 95)**	
	a=2, b=2	a=2, b=4	a=2, b=2	a=2, b=4	a=2, b=2	a=2, b=4
1A_Lyt_Lys	0.9917 (0.0106)	0.9896 (0.0049)	0.9898 (N/A)	0.9905 (0.0043)	0.7997 (N/A)	0.6204 (0.0624)
1A_Lyt(1)_Lys[b]	0.9950 (0.0053)	0.9923 (0.0045)	none	none	none	none
1B_Lyt_Lys	0.9806 (0.0236)	0.9769 (0.0277)	0.9971 (N/A)	0.9270 (N/A)	0.7995 (N/A)	0.7679 (N/A)
1B_Lyt(1)_Lys	0.9780 (0.0252)	0.9869 (0.0199)	none	0.9304 (N/A)	none	0.7520 (N/A)
2_Lyt_Lys	0.6666 (N/A)	0.9746 (0.0248)	none	none	none	none
3_Lyt_Lys	0.9950 (0.0073)	0.9893 (0.0150)	none	none	none	none
4_Lyt_Lys	0.4751 (0.0043)	0.4956 (0.0006)	none	0.4956 (0.0006)	none	0.2983 (0.0102)
6_Lyt_Lys	0.9984 (N/A)	0.9845 (0.0166)	none	none	none	none
Lyt_Lys_CII	0.9855 (0.0155)	N/A	0.9573 (N/A)	N/A	0.7526 (N/A)	N/A
Lyt_Lys_CII(1)	0.9801 (0.0151)	N/A	0.9718 (N/A)	N/A	0.7595 (N/A)	N/A
Lyt(1)_Lys_CII(1)	0.9894 (0.0134)	N/A	none	N/A	none	N/A
Lyt_Lys_CII$'$[c]	0.9840 (0.0126)	N/A	none	N/A	none	N/A

[a] SSR = Stochastic success rate
[b] Value in the parenthesis is Hill coefficient of protein binding
[c] Parameter sets selected for bistability at MoI of 2.

Table 3: Average and SD of deterministic and stochastic switch quotients for a range of stochastic success rate for time length of 100 arb. units

Model	**AVG Deterministic SQ (SD) (95 >SSR[a] ⩾ 90)**		**AVG Stochastic SQ (SD) (95 >SSR ⩾ 90)**	
	a=2, b=2	a=2, b=4	a=2, b=2	a=2, b=4
1A_Lyt_Lys	0.9937 (0.0025)	0.9883 (0.0068)	0.8087 (0.0382)	0.5728 (0.1003)
1A_Lyt(1)_Lys	0.9945 (N/A)	0.9930 (N/A)	0.8084 (N/A)	0.5825 (N/A)
1B_Lyt_Lys	0.9950 (N/A)	0.9972 (0.0020)	0.7891 (N/A)	0.6691 (0.0855)
1B_Lyt(1)_Lys	none	none	none	none
2_Lyt_Lys	none	none	none	none
3_Lyt_Lys	none	none	none	none
4_Lyt_Lys	none	none	none	none
6_Lyt_Lys	none	none	none	none
Lyt_Lys_CII	0.9808 (0.0008)	N/A	0.7614 (0.0211)	N/A
Lyt_Lys_CII(1)	0.9593 (N/A)	N/A	0.7551 (N/A)	N/A
Lyt(1)_Lys_CII(1)	0.9647 (N/A)	N/A	0.7178 (N/A)	N/A
Lyt_Lys_CII′	0.9791 (0.0106)	N/A	0.6705 (0.0466)	N/A

[a] SSR = Stochastic Success Rate

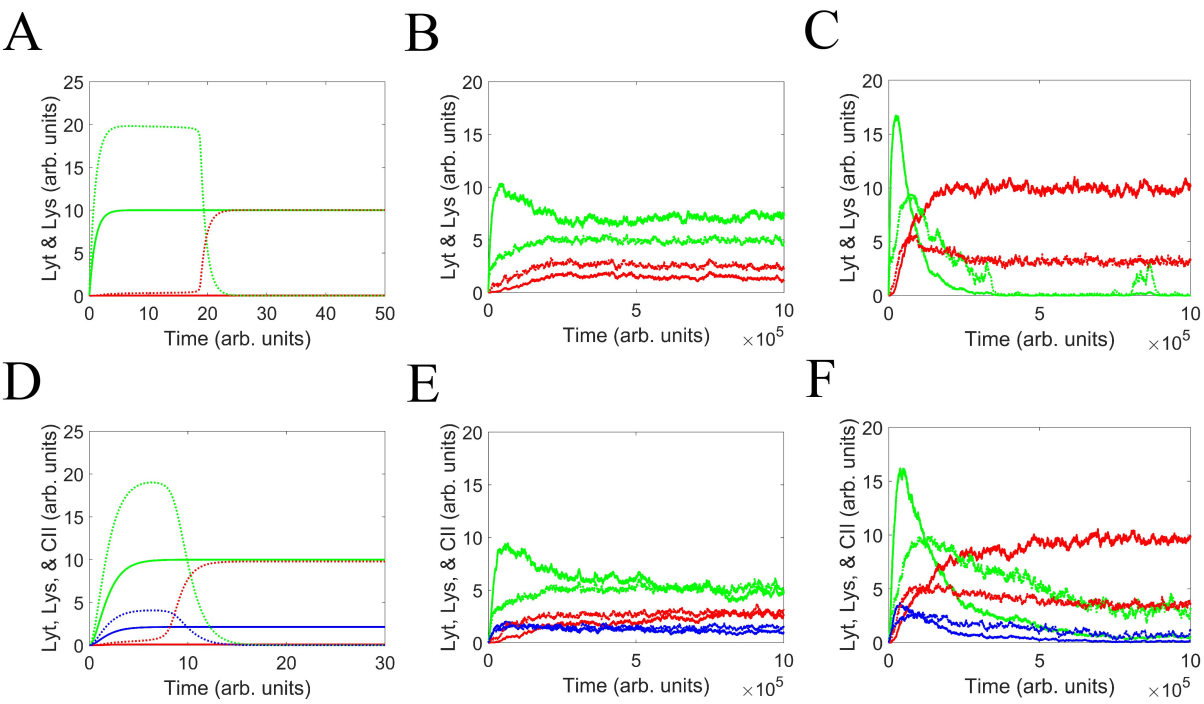

Figure 4: Deterministic and stochastic simulations of the quasi-minimal two-protein model (1A_Lyt_Lys) and the three-protein model (Lyt_Lys_CII). Lyt, Lys, and CII are represented by green, red, and blue, respectively. For the deterministic simulations, concentrations of proteins at MoI of 1 and 2 are depicted by solid curve and dashed curve, respectively. For the stochastic simulations, solid curve and dotted curve, respectively, represent average and standard deviation of number of protein molecules from 100 simulations. For a given model, the parameter set which generated maximum stochastic success rate (SSR) for time length of 100 arb. units was used for simulations. Average stochastic simulation trajectories shown here are qualitatively similar to those of all of the other models for parameter sets which generated high SSR (data not shown); whereas, the deterministic simulation trajectories were so, irrespective of SSR (data not shown). In stochastic simulation plots, the original abscissa, which had unequally spaced time intervals, was converted to one with equally spaced time intervals. Each unit of abscissa was divided into 10000 intervals. For the tiny fraction of intervals which still contained more than one event, their last events were defined to be their only events. (**A**) Deterministic simulations of 1A_Lyt_Lys. At MoI of 2, concentration of Lyt initially becomes more than its equilibrium concentration at MoI of 1 but then comes back to very low level. The bell-shaped kinetics occurs because the initial rate of production of Lyt at MoI of 2 (i.e., when Y remains very low) is higher than that at MoI of 1; however, as Lyt's concentration increases, positive autoregulatory loop of *lys* gets triggered, leading to production of Lys in high amount, which represses *lyt*. (**B-C**) Stochastic simulations of 1A_Lyt_Lys for MoI of 1 and 2, respectively. (**D**) Deterministic simulations of Lyt_Lys_CII. At MoI of 2, concentrations of Lyt and CII initially become more than their respective equilibrium concentrations at MoI of 1 but then come back to very low levels. A theoretical study of the lysis/lysogeny decision using a three-protein model, which is very similar to that of the current paper, also reported bell-shaped kinetics for CII [6]. Analogous to the two-protein model, the reason for bell-shaped kinetics for the three-protein model is that the initial rate of production of CII at MoI of 2 (i.e., when Y and Z remain very low) is higher than that at MoI of 1; however, as CII's concentration increases, positive autoregulatory loop of *lys* gets triggered, leading to production of Lys in high amount, which represses the promoter controlling the expression of *lyt* and *cII*. (**E-F**) Stochastic simulations of Lyt_Lys_CII for MoI of 1 and 2, respectively. Bell-shaped curve for CII at MoI of 6 was reported by an experimental study [3]. Curiously, while equilibrium concentration of CII is higher than that of CI in the deterministic simulation, CII settles down to lower level than CI in the stochastic simulation.

2.5. Closer to lambda's GRN: the minimal three-protein model

In order to further understand design principles of the switch, a three-protein simplified version of lambda's switch is considered. A CII-like protein is added to 1A_Lyt_Lys besides modifying the role of Lyt. Thus, the role of Lyt in this model is identical to that of Cro in lambda's GRN. That is, in addition to repressing transcription of its own gene and, as a result, the gene co-transcribed with *lyt*, viz. *cII*, now Lyt represses transcription of *lys* too. As in the two-protein models, the function of Lys here is identical to that of CI in lambda's GRN. The role of CII in the three-protein model is to activate transcription of *lys*. This corresponds to CII activation of *pRE* promoter of lambda's GRN, leading to synthesis of mRNA which contains orf for *cI*. Like in 1A_Lyt_Lys, CII inhibition of Q's production is subsumed into Lys inhibition of transcription of *lyt-cII*. The three-protein model considered here is different from that in [6], in which CII activates transcription of *cI* from a distinct (*pRE*) promoter. Because in the three-protein model considered here, CII has to compete with Lyt, which represses transcription of *lys*, for binding to the intergenic region and thus causing transcription of *lys*, engendering lysogeny becomes more challenging than in the model in which CII activated transcription from a distinct promoter.

The degradation constant for *xz* (concentration of *lyt-cII* mRNA), viz. k_6, was arbitrarily chosen to be unity so as not to increase computation time. The degradation constants for X (concentration of Lyt), Z (concentration of CII), and Y (concentration of Lys), viz. k_7, k_9, k_8, respectively, were taken to be unity for the same reason that degradation constants for the two-protein models were set equal to 1. Because for 1A_Lyt_Lys, SQs generated by Hill coefficients' set of a=2, b=2 were as high as SQs generated by that of a=2, b=4, applying occam's razor, Hill coefficient for Lyt and Lys binding was taken to be 2 and 2, respectively, and not 2 and 4. Further, taking lead from here, Hill coefficient for CII binding was taken to be 2, even though it has been shown to exist as tetramer in solution [19] and in crystallized free and DNA-bound state [20].

Model equations for the three-protein model are as follows.

Transcription of *lyt-cII* genes:

$$\frac{dxz}{dt} = \frac{mk_1(1 + \frac{Z^c}{K_{D3}})}{1 + \frac{X^a}{K_{D1}} + \frac{Y^b}{K_{D2}} + \frac{Z^c}{K_{D3}}} - k_6 xz \tag{15}$$

Translation of *lyt*:

$$\frac{dX}{dt} = k_2 xz - k_7 X \tag{16}$$

Translation of *cII*:

$$\frac{dZ}{dt} = k_4 xz - k_9 Z \tag{17}$$

Production of Lys:

$$\frac{dY}{dt} = \frac{m(k_5 \frac{Y^b}{K_{D2}} + k_3 \frac{Z^c}{K_{D3}})}{1 + \frac{X^a}{K_{D1}} + \frac{Y^b}{K_{D2}} + \frac{Z^c}{K_{D3}}} - k_8 Y \tag{18}$$

where, c is Hill coefficient of CII binding; k_1 is basal expression rate of *lyt-cII* genes; K_{D3} is the "combined" dissociation constant of CII (see Methods); k_2 and k_4 are translation rates of *lyt* and *cII*, respectively. k_5 and k_3 are rate constants for transcriptional activation of *lys* by Lys and CII, respectively.

As stated above, there are experimental evidences for CII existing as tetramer in solution [19] and in crystallized free and DNA-bound state [20]. Additionally, as figure 4 in the work of Hoopes and McClure [17] shows, the binding curve of CII to *pAQ* has appreciable lag phase, showing that it binds as a multimer. However, in figure 2c in the work of Kobiler et al. [3] the curve of *pRE* activity with respect to CII level is not sigmoidal as expected for multimeric binding, but it's hyperbolic as seen in monomeric binding. Therefore, the three-protein model was considered with Hill coefficient for CII binding being equal to 1 (Lyt_Lys_CII(1)). Additionally, another case was considered where Hill coefficient for Lyt binding too was taken to be 1 (Lyt(1)_Lys_CII(1)). This also warranted considering the two-protein models in which Lyt's role is to activate transcription of *lys*, viz. 1A_Lyt_Lys and 1B_Lyt_Lys, with Hill coefficient of Lyt being equal to 1, named 1A_Lyt(1)_Lys and 1B_Lyt(1)_Lys, respectively. SQs generated by all new variants were similar in values to those generated from their counterparts, where Hill coefficient of either Lyt or CII, or both, were taken to be 2.

For 1A_Lyt(1)_Lys and 1B_Lyt(1)_Lys, all SQs were more than 0.98 and 0.93, respectively, for both sets of Hill coefficients. For all of the three-protein models, all SQs were greater than 0.95. In order to examine the significance of cooperativity in positive feedback here, another set of Hill coefficients, viz. a=2, b=1, was considered for all models possessing positive feedback loop. Highest DSQ for 1A_Lyt_Lys(1): 0.1262; 1B_Lyt_Lys(1): 0.1150; 3_Lyt_Lys(1): 0.0001; 6_Lyt_Lys(1): ≈ 0. Extremely low values of highest DSQs generated by this set of Hill coefficients demonstrate the absolute necessity of cooperative nature of Lys binding. Just like the Hill coefficients' set of a=2, b=1, parameter sets generated by a=1, b=1 for models possessing positive feeback loop gave very low highest SQs. Highest DSQ for 1A_Lyt(1)_Lys(1): 0.1195; 1B_Lyt(1)_Lys(1): 0.1230; 6_Lyt(1)_Lys(1): ≈ 0. Because Lyt does not bind to any promoter in 3_Lyt_Lys, the model was not included in this analysis.

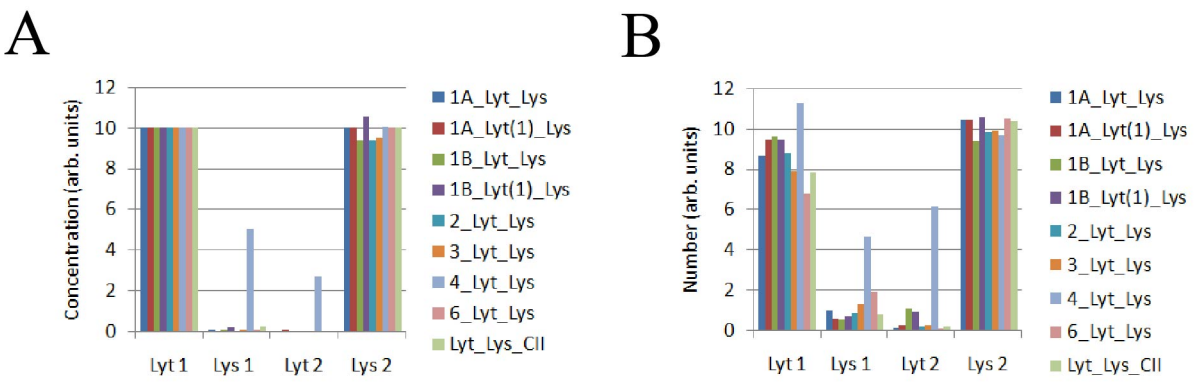

Figure 5: Equilibrium values corresponding to those parameter sets which gave maximum SSR for time length of 100 arb. units (see Table 5). (**A**) Deterministic simulations. (**B**) Stochastic simulations. Notably, value of Lys at MoI of 1 and that of Lyt at MoI of 2 for 4_Lyt_Lys are much higher than those of the any other model.

2.6. Stochastic simulation

Because gene expression is stochastic [21,22], it is crucial to verify the results obtained from the deterministic simulations through stochastic simulations. Therefore, stochastic simulations were performed, implementing Gillespie algorithm [23], using parameter sets obtained from deterministic simulations. The transient kinetics, viz. initial rise, followed by partial drop, and

plateauing of trajectory at MoI of 1 and bell-shaped trajectory at MoI 2, were completed at most by 100 arb. units. In order to calculate stochastic switch quotient (SSQ), protein levels were averaged for 25, 50, 100, and 200 arb. units of time, keeping the starting time point at 100 arb. unit. That is, for averaging time=25, averaging was done between 100 and 125 arb. units; for averaging time=50, averaging was done between 100 and 150 arb. units; and so forth. All stochastic data, unless specified otherwise, presented in this paper is for time=100 arb. units (for other time lengths, see Supplementary Information: Table 1-9).

Barring a few parameter sets of two models for simulation time length of 200 arb. units, no parameter set was able to produce the switching behaviour in every run of stochastic simulation. That was because either the SSQ was negative ($S_1 < S_2$) or, rarely, S_3 was zero. Percentage of runs that produced finite, positive SQ during stochastic simulation for a given parameter set and set of Hill coefficients would henceforth be referred to as stochastic success rate (SSR). Only those runs that produced finite, positive SSQ were taken into account in calculating average and standard deviation of SSQ. For two-protein and three-protein models, respectively, 500 and 200 simulations were performed for a given parameter set and set of Hill coefficients.

Table 4: Number of parameter sets for various ranges of stochastic success rate.

Model	**SSR[a] ⩾ 95**		**95 >SSR ⩾ 90**		**90 >SSR ⩾ 80**		**Total no. of parameter sets**	
	a=2 b=2	a=2 b=4	a=2 b=2	a=2 b=4	a=2 b=2	a=2 b=4	a=2 b=2	a=2 b=4
1A_Lyt_Lys	1	4	5	3	10	3	20	17
1A_Lyt(1)_Lys	0	0	1	1	3	9	17	15
1B_Lyt_Lys	1	1	1	5	2	2	6	11
1B_Lyt(1)_Lys	0	1	0	0	8	6	14	10
2_Lyt_Lys	0	0	0	0	0	0	1	6
3_Lyt_Lys	0	0	0	0	1	6	10	12
4_Lyt_Lys	0	2	0	0	0	0	2	2
6_Lyt_Lys	0	0	0	0	0	0	1	13
Lyt_Lys_CII	1	N/A	2	N/A	1	N/A	9	N/A
Lyt_Lys_CII(1)	1	N/A	1	N/A	5	N/A	9	N/A
Lyt(1)_Lys_CII(1)	0	N/A	1	N/A	1	N/A	9	N/A
Lyt_Lys_CII′	0	N/A	2	N/A	4	N/A	9	N/A

[a] SSR = Stochastic Success Rate

For all the models, for any given parameter set, SSQ was less than its deterministic counterpart, or DSQ. As Table 2 and 3, respectively, show for SSR $\geqslant$ 90 and 95 >SSR $\geqslant$ 90, average SSQ at Hill coefficients a=2, b=2 is higher than that at Hill coefficient a=2, b=4. Also, for both the ranges of SSR and both the pairs of Hill coefficients, average SSQ is roughly proportional to average DSQ. Maximum SSR across all the models, barring a few cases, increases with time length of simulation. The order of models arranged according to maximum SSR remains more or less same across all the four time lengths of simulation. 4_Lyt_Lys has highest maximum SSR, closely followed by 1B_Lyt(1)_Lys, 1B_Lyt_Lys, 1A_Lyt_Lys, and 1A_Lyt(1)_Lys, in that order. Maximum SSR of 3_Lyt_Lys is around halfway between that of 1B_Lyt(1)_Lys and 6_Lyt_Lys. 2_Lyt_Lys has lowest maximum SSR. The last two models possess double-negative feedback, or mutual repression motif. This result that lambda-like switch based on double-negative feedback works poorly in the presence of noise has been reported earlier also. Avlund et al. showed that various two-protein minimal models, based on mutual repression motif, of lambda's switch which were able to produce lambda-like switching behaviour in a noise-less environment, did not function when noise was introduced [24]. However, additional CII-like protein significantly improved robustness to noise. Notably, one of their two two-protein models (i.e., motif b of figure 2 of Avlund et al. [24]) which did produce lambda-like switching behaviour even in the presence of noise (though with much lower success as compared to their three-protein models) is the model 6_Lyt_Lys in the current paper.

2.7. Bistability at MoI of 1 and lysogen stability

After commitment to lysogeny (here: at MoI of 2), if only one of the phage genomes gets integrated into the bacterial chromosome, thereby bringing MoI down to 1, maintainence of lysogeny would not be possible and lysis would ensue in case only one stable state existed at MoI of 1. Therefore, in order to assess lysogen stability in the given scenario, model equations were solved at MoI of 1 with initial values of Lyt and Lys being their equilibrium values at MoI of 2 (when model equations were solved with initial values of Lyt and Lys being zero). That is, it was checked whether at MoI of 1 Lyt and Lys, starting from their equilibrium values

Table 5: Maximum stochastic success rate for the four time lengths

Model	Maximum stochastic success rate			
	T = 25	**T = 50**	**T = 100**	**T = 200**
1A_Lyt_Lys	89.4	93.6	96.8	100
1A_Lyt(1)_Lys	83.8	84	91	97.2
1B_Lyt_Lys	90.8	93.4	97.2	99.2
1B_Lyt(1)_Lys	96	96.6	99.2	100
2_Lyt_Lys	39.4	40.2	46.4	50.6
3_Lyt_Lys	74.8	81.2	86	93.8
4_Lyt_Lys	87.4	93	98.8	99.8
6_Lyt_Lys	57	64.8	71.2	83.8
Lyt_Lys_CII	92.5	94.5	95	96.5
Lyt_Lys_CII(1)	90	96	95	97
Lyt(1)_Lys_CII(1)	88	87	94.5	97.5
Lyt_Lys_CII'[a]	83	85.5	92.5	96.5
Lyt_Lys_CII(1)'[a]	32.5	35	39	43

[a] Parameter sets selected for bistability at MoI of 2.

at MoI of 2, could still settle down to values which are representative of lysogeny (i.e., low value of Lyt and high value of Lys). It should be noted that this method finds out only those second stable states which represent lysogeny maintenance. In deterministic simulations, all of the two-protein models possessing the positive feedback (except 1B_Lyt_Lys for one parameter set) exhibited bistability at MoI of 1 for all of the parameter sets. In the other stable state, concentration of Lyt is almost zero and that of Lys is about half of its concentration at MoI of 2.

For 4_Lyt_Lys, none of the parameter sets produced bistability at MoI of 1. That's because the nullcline of Lys is a flat line and that of Lyt is a monotonically decreasing function. Therefore, 4_Lyt_Lys cannot produce bistability at either of the MoIs. For 2_Lyt_Lys, for Hill coefficient's set of a=2, b=2 , only one parameter set generated bistability at MoI of 1. For Hill coefficient's set of a=2, b=4, all parameter sets except one exhibited bistability at MoI of 1. It turned out that the parameter set which did not produce bistability has K_{D1} and K_{D2} about 5 orders of magnitude higher than average of K_{D1} and K_{D2} of rest of the parameter sets of 2_Lyt_Lys (Supplementary Information: Table 10). Because in 4_Lyt_Lys Lyt does not bind

to any promoter, it can be thought to be having extremely large dissociation constant (i.e., very large K_{D1}). Further, K_{D2} of the parameter set is within an order of average K_{D2} of parameter sets of 4_Lyt_Lys for the given pair of Hill coefficients. Therefore, it can be argued that the parameter set actually belonged to 4_Lyt_Lys.

All of the three-protein models for every parameter set exhibited bistability at MoI of 1. Values of Lyt and Lys of second stable state at MoI of 1 in three-protein models are about same as those of second stable states in two-protein models at MoI of 1. Stochastic bistability was searched for using the same method employed to search for deterministic bistabilty. However, stochastic bistability could not be detected for any of the two-protein and three-protein models at MoI of 1. This may be due to noise driving trajectories out of the basin of attraction of one stable state to that of the other [25]. Stochastic bistability was checked only for those parameter sets whose SSR was more than 95%. That was done to avoid mistaking failed switch for bistability.

2.8. Bistability at MoI of 2 and lytic development's stability

Because replication of viral genome after committment to lysis causes MoI to become more than 1, (here: 2), execution of lytic development would not remain stable and lysogeny would ensue in case only one stable state existed at MoI of 2. Therefore, in order to assess the stability of lytic development in the given scenario, model equations were solved at MoI of 2 with initial values of Lyt and Lys being their equilibrium values at MoI of 1 (when model equations were solved with initial values of Lyt and Lys being zero). That is, it was checked whether at MoI of 2 Lyt and Lys, starting from their equilibrium values at MoI of 1, could still settle down to values which are representative of lysis (i.e., high value of Lyt and low value of Lys). As previously, the method finds out only those second stable states which are relevant for stability of lytic development. In deterministic simulations, only two models, viz. 2_Lyt_Lys and 6_Lyt_Lys, exhibited bistability at MoI of 2. Notably, among all of the two-protein models, only these two models contain Lyt repression of transcription of *lys*. In the other stable state, concentration of Lyt is double of its concentration at MoI of 1 and that of Lys is almost zero. For 2_Lyt_Lys,

for Hill coefficient's set of a=2, b=2, the parameter set that produced bistability at MoI of 1 is the only parameter set that exhibited bistability at MoI of 2. For Hill coefficient's set of a=2, b=4, all parameter sets (except the one which actually belonged to 4_Lyt_Lys) exhibited bistability at MoI of 2. For 6_Lyt_Lys, for Hill coefficients' set of a=2, b=2, one parameter set generated bistability at MoI of 2. For Hill coefficients' set a=2, b=4, all parameter sets except one exhibited bistability at MoI of 2.

None of the three-protein models for any parameter set exhibited bistability at MoI of 2. However, given that the three-protein model possesses repression of *pR* by Lyt, a feature associated with bistability at MoI of 2 for the two two-protein models, it was suspected that it, too, might exhibit bistability at MoI of 2 if this feature was actively selected for. Therefore, parameter search was carried out by adding another selective filter. That is, Lyt at MoI of 1 (when model equations solved with initial values of Lyt and Lys being zero) ¡ Lyt at MoI of 2 (when model equations were solved with initial values of Lyt and Lys being their equilibrium values at MoI of 1). This method generated 9 parameter sets for Lyt_Lys_CII (named Lyt_Lys_CII') and 3 for Lyt_Lys_CII(1) (named Lyt_Lys_CII(1)') but none for Lyt(1)_Lys_CII(1) (named Lyt(1)_Lys_CII(1)'). Further, while the maximum SSR of Lyt_Lys_CII' was very close to that of Lyt_Lys_CII, maximum SSR of Lyt_Lys_CII(1)' was less than half of that of Lyt_Lys_CII(1). This result underscores the importance of cooperative binding of all the three key proteins of the switch. The most appreciable change between Lyt_Lys_CII and Lyt_Lys_CII') is in the dissociation constants. Average K_{D1} and K_{D2} of Lyt_Lys_CII') are about an order of magnitude lower than those of Lyt_Lys_CII; whereas, average K_{D3} is about two orders of magnitude lower for the same comparison (Supplementary Information: Table 11). Notably, parameter search with the additional selective filter did not produce any parameter set (i.e., which could exhibit bistability at MoI of 2) for the two-protein models other than 2_Lyt_Lys and 6_Lyt_Lys. This further confirms that Lyt (or Cro) repression of *lys* (or *pRM*) is required to produce bistability at MoI of 2.

A study demonstrated that average number of phages produced per infection (burst size) of a mutant defective in Cro repression of *pRM* was 75% of that of the wildtype; while, burst size produced after prophage induction triggered by ultra violet (UV) at 10 J/m^2 UV and at

5 J/m^2 UV in mutants were, respectively, 1/3 and 1/8 times of that of the wild type [26]. Cro repression of *pRM* having much larger impact on burst size in prophage induction as compared to infection can be explained in the following way. Replication of viral genome post-induction leads to lysogeny-like situation (i.e., high MoI); thus, residual CI and CI being produced by existing *cI* mRNA, which remain unaffected by UV irradiation, activate multiple *pRM* promoters, defective in binding Cro, and trigger the positive feedback loop. CI, now present in higher concentration, represses promoter *pR*, under whose control transcription of *Q* gene lies. Therefore, lytical processes, viz. viral genome replication and protein production, occur to a lesser extent, hence lower burst size. However, for CI to be made to the level sufficient to activate the promoter of its own gene during lytic development post-infection, transcription from promoter *pRE* (activated by CII) and translation of resulting transcripts has to take place first. This extra time allows more rounds of replication of viral genome and additional production of viral proteins; therefore, the effect of defective Cro repression of *pRM* on burst size during lytic development post-infection is lesser. Although before CI can repress *pR*, CII will impede production of Q protein by activating transcription from *paQ*, but as aforementioned, this process is much weaker than CI repression of *pR* in inhibiting production of Q protein.

It should be noted that the modelling scheme in the current work is unable to embody the fact that even without Lyt repression of *lys* lytic development does occur, albeit to a lesser extent, viz. burst size is lower than when Lyt repression of *lys* is intact. That is, in the (quasi-) minimal models which do not exhibit bistability at MoI of 2 increase in MoI due to genome replication after commitment to lytic would reverse the commitment and lytic development (zero burst size), and lysogeny would ensue. This inability of the current modelling scheme stems from not considering lytical processes, initiated by Q, explicitly. The frequency of lysogeny (proportion of infected cells that formed lysogens) post-infection in the mutant was 30% higher than that in the wild type; and, the fraction of cells induced at 10 J/m^2 UV and at 5 J/m^2 UV was 32% and 48% lower for the same comparisions. The increase in the lysogenization frequency post-infection and decrease in the fraction committing to induction is

due to defective Cro repression of *pRM* tilting the decision towards lysogenization. However, for the latter case there exists an additional factor: activation of *pRM* by residual CI and CI being produced by existing *cI* mRNA. It should be noted that the protein-only approach of the present study cannot take into account production of CI by existing *cI* mRNA during the process of prophage induction.

Cro represses *pL* and *pR* by fourfold and twofold, respectively [27]. Therefore, absence of Cro increases the level of CII by allowing transcription of *cII*, which is under the control of *pR*, and *cIII*, which is under the control of *pL* and whose product prevents degradation of CII by protease HflB.

CII engenders the production of CI by activating *pRE*, and CI activates *pRM*; therefore, like Cro repression of *pRM*, inhibition of *pL* and *pR*, too, by Cro should contribute to bistability at MoI of 2. However, because the end result of CII's production is activation of *pRM*; qualitatively, the Cro inhibition of *pL* and *pR* can be subsumed into Cro inhibition of *pRM*. As is the case at MoI of 1, stochastic bistability could not be detected for any of the two-protein and three-protein models at MoI of 2. Because stochastic bistability could be checked only for those parameter sets whose SSR was more than 95%, most models, including the two two-protein models which exhibited deterministic bistability at MoI of 2 (i.e., 2_Lyt_Lys and 6_Lyt_Lys), could not be checked for their potential ability to produce stochastic bistability at the MoI of 2.

3. Design principles of lambda's switch

Because, barring 2_Lyt_Lys for a=2, b=2 and 4_Lyt_Lys for both sets of Hill coefficients, DSQ generated by every model for every parameter set is more than 0.9, design principles of lambda's switch cannot be based on DSQ. One noticeable feature that the models clearly differ in is the maximum SSR they generate. Speculative explanations for difference in maximum SSR with respect to difference in model design are offered here, though it merits theoretical study. Firstly, it should be noted that lack of 100% SSR cannot be, if at all, attributed to the presence of bistability alone. That's because maximum SSR of 4_Lyt_Lys, which cannot produce bistability,

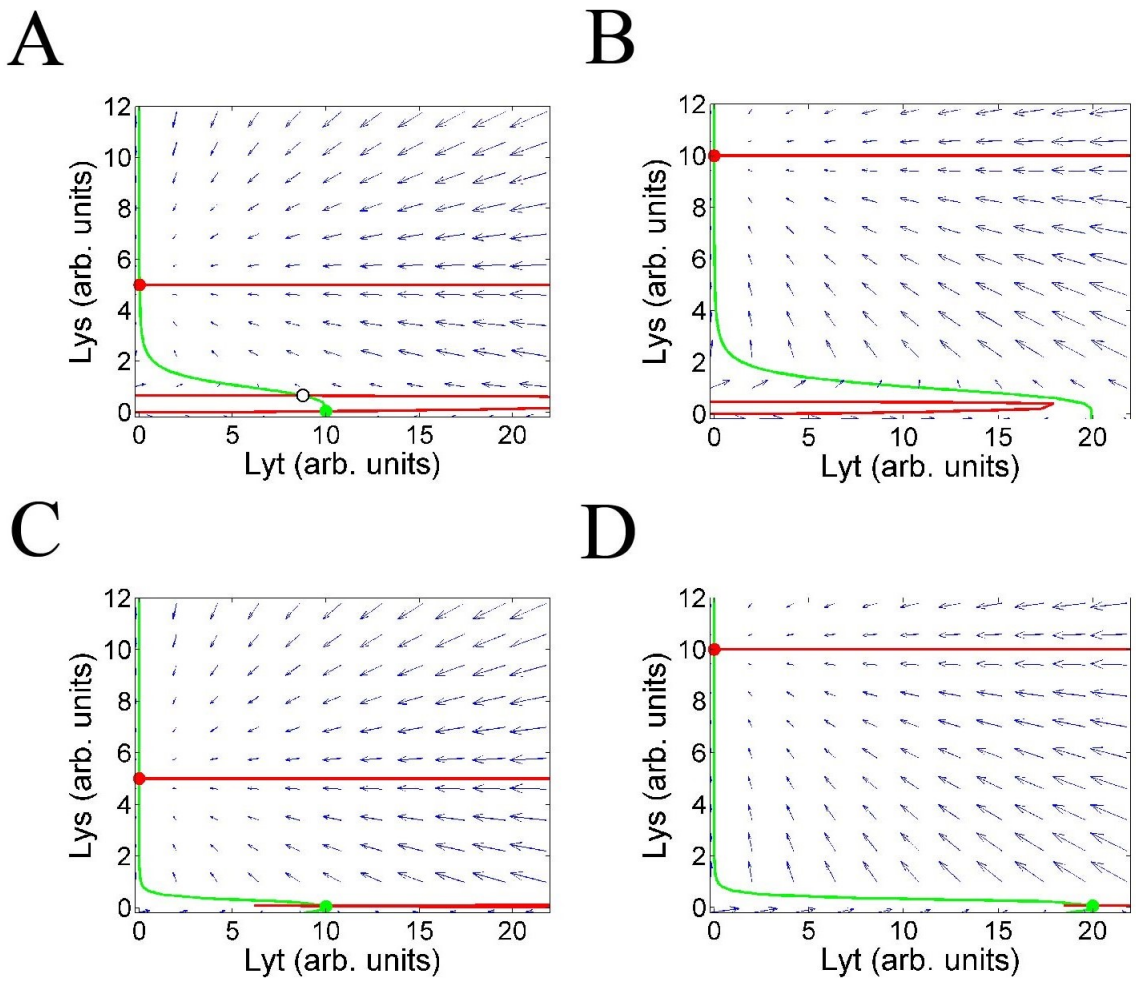

Figure 6: (**A-B**) Phase diagram of 1A_Lyt_Lys and 6_Lyt_Lys for MoI of 1 and 2 corresponding to their respective parameter set which gave maximum SSR. Green and red full circles are stable fixed points; whereas, empty black circle is unstable fixed point (not marked for 6_Lyt_Lys because of being very close to the stable fixed point at both the MoIs). At MoI of 1, green dot shows anti-immune state; while, red dot shows immune state; that is, lysogeny established by two phages, genome of one of which gets integrated into the host's chromosome. At MoI of 2, red dot shows immune state established by two phages; whereas, green dot shows anti-immune state established at MoI of 1 but which persists even after genome replication

for the four time lengths of stochastic simulations is 87.4, 93, 98.8, and 99.8, respectively.

Adding positive autoregulation of *lys* to 4_Lyt_Lys makes it 3_Lyt_Lys, whose maximum SSR is lower than that of the former model by 14.41%, 12.68%, 12.95%, and 6.01% for the four time lengths, respectively. In 4_Lyt_Lys, Lys is produced due only to basal expression of *lys*; whereas, in 3_Lyt_Lys, production of Lys depends on basal expression and positive autoregulation of *lys*. The basal expression of *lys*, which acts as trigger of the positive feedback loop, and parameters involved in the transcriptional activation of *lys* by its own product should be such that the feedback loop gets triggered at MoI of 2 but not at MoI of 1. These additional requirements, failing which the loop can get triggered at MoI of 1 or fails to get triggered at MoI of 2, are perhaps responsible for lower maximum SSR of 3_Lyt_Lys as compared to that of 4_Lyt_Lys.

The maximum SSR of 2_Lyt_Lys, which is generated by adding Lyt repression of *lys* to 4_Lyt_Lys, for the four time lengths are 39.4, 40.2, 46.4, and 50.6, viz. between 40% and 50% of that of 4_Lyt_Lys. An obviously plausible reason for much lower maximum SSR of 2_Lyt_Lys as compared to 4_Lyt_Lys is increase in the number of ways the switch can fail. In 4_Lyt_Lys, Lys repression of *lyt* should be neither too strong such that it affects Lyt's expression at MoI of 1 nor too weak such that Lyt's production does not get sufficiently repressed at MoI of 2. In 2_Lyt_Lys, apart from the last requirement, Lyt repression of *lys* should be neither too strong such that it affects expression of Lys at MoI of 2 nor too weak such that production of Lys does not get sufficiently repressed at MoI of 1. Hence, while there is one way 4_Lyt_Lys can fail, 2_Lyt_Lys can fail in two ways.

The addition of positive autoregulation of *lys* to 2_Lyt_Lys, thereby making it 6_Lyt_Lys, improves maximum SSR. The maximum SSR of 6_Lyt_Lys for four time lengths are 57, 64.8, 71.2, and 83.8. They are 44.67%, 61.19%, 53.44%, and 65.61% higher than the respective maximum SSR of 2_Lyt_Lys. According to the reasoning employed to explain lower maximum SSR of 3_Lyt_Lys as compared to that of 4_Lyt_Lys, maximum SSR of 6_Lyt_Lys should be lower than that of 2_Lyt_Lys. However, because that is not the case, it is argued that another factor, viz. reduction in basal expression of *lys* (k_3) and concomitant weakening of

Lyt repression of *lys* (increase in K_{D1}) in 6_Lyt_Lys, more than offsets the previous factor. This comparison is made only between parameter sets corresponding to Hill coefficients a=2, b=4, because both 2_Lyt_Lys and 6_Lyt_Lys have only one parameter set corresponding to Hill coefficient a=2, b=2, thereby rendering comparison meaningless for the latter pair of Hill coefficients.

If six parameter sets of 6_Lyt_Lys are ignored, its highest k_3, viz. 0.5468, turns out to be lower than the lowest k_3 of 2_Lyt_Lys, viz. 4.6875. The average (SD) k_3 of 6_Lyt_Lys is 0.23 (0.33); while, that of 2_Lyt_Lys is 5.01 (0.21). In the same way, the minimum K_{D1} of 6_Lyt_Lys, viz. 3.30, turns out to be greater than the maximum K_{D1} of 2_Lyt_Lys, viz. 0.4926. The average (SD) K_{D1} of 6_Lyt_Lys is 137.6 (312.32); whereas, that of 2_Lyt_Lys is 0.35 (0.30). As aforementioned, one of two ways 2_Lyt_Lys can fail is by having either too strong or too weak Lyt repression of *lys*. Hence, weakening of this factor; that is, by reduction in k_3 and resultant increase in K_{D1}, is likely to be responsible for 6_Lyt_Lys having higher maximum SSR than 2_Lyt_Lys. 6_Lyt_Lys differs from 3_Lyt_Lys only in possessing inhibition of *lys* by Lyt. Therefore, intuitively, it can be argued that 6_Lyt_Lys is a compromise between 3_Lyt_Lys (for its high maximum SSR) and 2_Lyt_Lys (for its bistability at MoI of 2). In other words, 6_Lyt_Lys incurs a drop in maximum SSR as compared to 3_Lyt_Lys in lieu of gaining bistability at MoI of 2.

The six parameter sets of 6_Lyt_Lys which are ignored are markedly different from rest of the sets. Specifically, while the maximum k_3 of rest of the parameter sets is 0.5468, k_3 of the six parameter sets are 5.02, 8.75, 20.08, 125.44, 172.80, and 300.00. Parameter sets corresponding to the first three values can be placed in one group; whereas, those corresponding to the last three values can be placed in another. Because K_{D1} and K_{D2} of parameter sets of the first group are of same order as those of parameter sets of 2_Lyt_Lys, the first group actually belongs to 2_Lyt_Lys except for higher k_3 for the former's last two parameter sets (Supplementary Information: Table 12). Parameter sets of the second group have unusually low SSR. Excluding the six parameter sets, lowest SSR for four time lengths are 37.4, 42.8, 44.8, and 51.8, respectively. On the other hand, SSR of parameter sets of the second group for

four time lengths are 2.6, 2.4, 1.4; 1.4, 1, 0.8; 0, 0.4, 0; 0, 0, 0, respectively.

1B_Lyt_Lys differs from 3_Lyt_Lys in that in the former, Lyt activates transcription of *lys*; while, in the latter, *lys* possesses basal expression. At MoI of 2, for both the models, concentration of Lyt initially becomes more than its equilibrium concentration at MoI of 1 but then comes back to very low level, as shown in the qualitatively representative figure 4A. Minimum peak value of Lyt at MoI of 2 for 1B_Lyt_Lys, 1B_Lyt(1)_Lys, 1A_Lyt_Lys, and 1A_Lyt(1)_Lys is 17.18, 17.88, 12.66, 15.06, respectively. As figure 4A shows, until Lyt's trajectory begins to steeply fall back to low level, concentration of Lys remains very low, which rises as Lyt's concentration drops. That indicates that time since beginning of simulation and until the steep fall of the Lyt's trajectory represents triggering of the autoregulatory loop. Additionally, as also shown in the figure 4A, for the two models, concentration of Lys at MoI of 1 remains very low as compared to that of Lyt.

For the purpose which will become clear below, approximation of the rate of change of Lys for the two models was sought in terms of neglecting concentration of Lys in the term corresponding to production of Lys (i.e., removing the term Y^b/K_{D2} from the numerator and denominator of the first term on the right-hand side of equality of equations 4 and 8) for time interval between beginning of simulation and until the point when Lyt's trajectory begins to drop sharply. Normalized time-averaged difference during the said time interval between concentrations of Lys produced by equation 4 and its approximated form, and 8 and its approximated form are lower 1) at MoI of 1 than MoI of 2, and 2) for pair of Hill coefficients a=2, b=4 than a=2, b=2. The same is also true for 1B_Lyt(1)_Lys, 1A_Lyt_Lys, and 1A_Lyt(1)_Lys (Supplementary Information: Table 13).

Because maximum normalized time-averaged difference for a=2, b=4 turns out to be less than 2% and around 25% at MoI of 1 and 2, respectively, for all the three models, viz. 1B_Lyt_Lys, 3_Lyt_Lys, and 1A_Lyt_Lys, (and counterparts of two of them, viz. with a=1), it may be a fair approximation (esp. in the spirit of speculative nature of explanation) to set concentration of Lys to zero at both the MoIs in the term corresponding to production of Lys in equation 4 and 8. Thus one gets dY/dt equal to $m(k_3X^a/K_{D1})/(1+X^a/K_{D1})$ - k_5Y and mk_3 - k_5Y,

respectively, - an approximation considered to be valid for the said time interval. 1B_Lyt_Lys and 3_Lyt_Lys can fail in two ways: either positive feedback loop, formed by self-activation of *lys*, gets triggered at MoI of 1 or fails to get triggered at MoI of 2.

The first term of the approximated form of dY/dt represents triggering of the positive feedback loop, which occurs during the said time interval. It increases proportionally to increase in MoI for 3_Lyt_Lys. However, because for 1B_Lyt_Lys, Lyt's concentration at MoI of 2 initially rises above its equilibrium concentration at MoI of 1, provided $Kd1$ to be much higher than X^a and hence dY/dt could be further approximated to $m(k_3X^a/K_{D1})$, increase in MoI would lead to more than proportional increase in the first term of dY/dt. This higher separation between propensity to trigger the autoregulatory loop at MoI of 1 and 2 for 1B_Lyt_Lys (and also 1B_Lyt(1)_Lys) than 3_Lyt_Lys is perhaps responsible for the former model having higher maximum SSR than the latter.

Because, as argued above, 1B_Lyt_Lys is qualitatively similar to 1A_Lyt_Lys, differing from the latter in only not possessing self-inhibition of textitlyt and therefore having identical equation for the rate of change of Lys, the argument in the previous paragraph also explains why 1A_Lyt_Lys has higher maximum SSR than 3_Lyt_Lys. Another, perhaps less likely, reason could be that, while gene expression in 3_Lyt_Lys is controlled by two promoters having independent (basal) expressions, that in 1B_Lyt_Lys (and also 1A_Lyt_Lys) is controlled by only one promoter, thereby lending tighter control over overall expression for the latter model.

Because bistability at both the MoIs is an absolute requirement of the switch, among the two-protein models, only 2_Lyt_Lys and 6_Lyt_Lys qualify as possible switch designs. Of these two, the latter model is obviously better than the former one in terms of maximum SSR. Additionally, as aforementioned, Lys must activate its own gene in a cooperative manner. As the example of 1B_Lyt_Lys/1A_Lyt_Lys and 3_Lyt_Lys shows, in order to trigger autoregulation of *lys* at MoI of 2, activating promoter of *lys* by binding of Lyt yields higher maximum SSR than when basal expression of *lys* performs that function. Hence, it is hereby posited that SSR of 6_Lyt_Lys is improved by replacing basal expression of *lys* with Lyt's activation of *lys*. However, because Lyt's function in 6_Lyt_Lys is to repress *lys*, another protein, viz. CII,

whose gene is co-transcribed with *lyt* is employed to activate *lys* in a cooperative manner. The three-protein model thus generated is minimal model for lambda's switch. The additive nature of applying cause-effect relationship used to explain higher maximum SSR of 1B_Lyt_Lys/1A_Lyt_Lys than 3_Lyt_Lys with respect to the difference in their design features, in order to explain higher maximum SSR of Lyt_Lys_CII' than 6_Lyt_Lys for the same comparison, should be noted. The insufficiency of this additive reasoning is reflected in the fact that difference between maximum SSR of Lyt_Lys_CII' and 6_Lyt_Lys is much higher than that between 1B_Lyt_Lys/1A_Lyt_Lys and 3_Lyt_Lys.

4. Conclusion

The current paper seeks to unravel design principles of the ability of lambda bacteriophage to choose between lytic and lysogenic pathway based on multiplicity of infection. The construction of a two-protein quasi-minimal model of lambda's switch along with other two-protein models, based on 1) whether *lys* possesses basal expression or gets activated by Lyt, 2) if autoregulation of *lys* is present, and 3) if *lys* gets inhibited by Lyt, consequences of different possible design features on the properties of switch are evaluated. It turns out that only double-negative feedback (or mutual repression motif) can produce bistability required for the stability of lytic development and lysogen stability.

Although maximum SSR of 6_Lyt_Lys, which is formed by adding self-activation of *lys* to 2_Lyt_Lys, is much higher than that of the latter model, it still can be improved upon. From the comparison of 1B_Lyt_Lys with 3_Lyt_Lys, it is inferred that activating promoter of *lys*, in order to trigger the positive feedback loop at MoI of 2, by Lyt's binding gives better maximum SSR than having basal expression of *lys* carry out that function. Applying that cause-effect relationship in an additive fashion to 6_Lyt_Lys explains why Lyt_Lys_CII' would have higher maximum SSR than the former model. Therefore, lambda's lysis/lysogeny switch is based on three design features: a) mutual repression, b) cooperative positive autoregulation of *cI*, and c) cooperative binding of activator protein, not basal expression, triggering positive feedback loop

formed by autoregulation of *cI*.

5. Methods

5.1. Derivation of model equations

In order to calculate the "combined" dissociation constants of proteins, the current work uses the fact that binding of protein to itself or DNA are much quicker processes than transcription and translation. Hence, the former processes are assumed to have reached quasi-steady states. In the expressions below, P, X, and Y are promoter, Lys, and Lyt, respectively.

$$\mathrm{X} + \mathrm{X} \overset{K_{DX}}{\rightleftharpoons} \mathrm{X}_2 \qquad \frac{[X]^2}{[X_2]} = K_{DX}$$

$$\mathrm{Y} + \mathrm{Y} \overset{K_{DY1}}{\rightleftharpoons} \mathrm{Y}_2 \qquad \frac{[Y]^2}{[Y_2]} = K_{DY1}$$

$$\mathrm{Y}_2 + \mathrm{Y}_2 \overset{K_{DY2}}{\rightleftharpoons} \mathrm{Y}_4 \qquad \frac{[Y_2]^2}{[Y_4]} = K_{DY2}$$

$$\mathrm{P} + \mathrm{X} \overset{K'_{D0}}{\rightleftharpoons} \mathrm{PX} \qquad \frac{[P][X]}{[PX]} = K'_{D0} = K_{D0}$$

$$\mathrm{P} + \mathrm{X}_2 \overset{K'_{D1}}{\rightleftharpoons} \mathrm{PX}_2 \qquad \frac{[P][X^2]}{[PX_2]} = K'_{D1} K_{DX} = K_{D1}$$

$$\mathrm{P} + \mathrm{Y}_4 \overset{K'_{D2}}{\rightleftharpoons} \mathrm{PY}_4 \qquad \frac{[P][Y^4]}{[PY_4]} = K'_{D2} K^2_{DY1} K_{DY2} = K_{D2}$$

The above expressions for concentrations of promoter-protein complexes are for cases where a) Lyt binds as monomer, b) Lyt binds as dimer, and c) Lys binds as tetramer. They exhaust

all other cases, viz. those of monomeric and dimeric Lys and CII. Further, transcription and mRNA degradation are assumed to be much faster processes than translation and protein degradation; hence, mRNA, too, are assumed to have reached quasi-steady states. Because genes *lyt* and *cII* are under the control of same promoter, in order to allow for potentially different rates of translation of their corresponding cistrons during the stochastic simulations, the dynamics of *lyt-cII* mRNA is considered explicitly. Hence, except that for *lyt-CII* mRNA, all equations describe the rate of change of concentrations of only proteins. With expressions for concentrations of promoter-protein complexes, one can write generalized form of the term representing protein production.

$$\frac{b + \sum_i k_i.[DNA - Prot_i]}{[Unbound\ DNA] + \sum_i [DNA - Prot_i]}$$

where b, if present, is basal expression and k_i is rate constant for transcriptional activation by i_{th} protein.

5.2. Parameter search

Parameter sets, viz. rate constants and dissociation constants, of model equations were searched deterministically in two stages, viz. order search and linear search (as they are named here). In the order search, rate constants and dissociation constants were searched as 3's exponent, which was varied between -5 and 5 with the difference of 1 (1/243, 1/81, ... 1 ..., 81, 243), in a nested fashion. Thus, number of parameter sets searched for a given model was equal to the number of parameters raised to the power 11. For three-protein models, in the interest of saving time, basal expression of *pR* and dissociation constant of Lyt and Lys were taken from the parameter set of 1A_Lyt_Lys (for Lyt_Lys_CII and Lyt_Lys_CII(1)) and 1A_Lyt(1)_Lys (for Lyt(1)_Lys_CII(1)) which gave maximum SSR. In the interest of saving time, a parameter set was rejected if it's DSQ was lower than that of the previous parameter set. Switch quotients generated by the order search are coarse because rate constants and dissociation constants were increased geometrically, thereby causing a lot of intervening values to remain unsampled.

Therefore, parameter sets generated by the order search were improved in terms their SQ, by the linear search, which searches the neighbourhood of a parameter set arithmetically. It was noted that those parameter sets, generated by the order search, whose DSQs were too close to each other were either rescaled form of each other or differed in those parameters to which DSQ was resilient up to a certain range. Hence, in order to remove redundancy, the starting parameters for the linear search were taken in such a way that the difference between their consecutive DSQs is at least 0.001. However, because 1A_Lyt_Lys, 1A_Lyt(1)_Lys, 1B_Lyt_Lys, 1B_Lyt(1)_Lys, and all of the three-protein models generated large number of parameter sets, the difference between the consecutive SQs for these four models is kept to be at least 0.01, in the interest of saving time. This way, Lyt_Lys_CII, Lyt_Lys_CII(1), Lyt(1)_Lys_CII(1) generated 15, 15, and 17 parameters, respectively. However, in order to save time, only their first 9 parameters were considered for the linear search.

The linear search was carried out in the following way. Value of each parameter (say, V) of a set was varied between V-3*V/5 and V+3*V/5 with increment of V/5, in a nested fashion. That is, suppose value of a parameter was 10, it was varied between 4 and 16 with increment of 2. Thus, number of parameter sets searched for one round was equal to the number of parameters raised to the power 7. However, for three-protein model, which had eight parameters, in order to save time, each parameter was varied between V-2*V/5 and V+2*V/5 with the increment of V/5, in a nested fashion. A parameter set was rejected if it's DSQ was lower than that of the previous parameter set. The linear search was ended if the latest DSQ was either lower than the previous one (which never happened) or if ((latest DSQ - previous DSQ)/previous DSQ) was less than 0.01. Again, in the interest of saving time, for three-protein model, the linear search was ended if DSQ at the end of last round was at least 0.95. It should be noted that the linear search is path dependent: a linear search may end up at a local maximum because it treaded a path which yielded higher DSQ initially instead of another path which, though, had yielded lower DSQ initially but would have led to the global maximum.

Parameter sets were normalized such that Lyt's equilibrium concentration at MoI of 1 becomes 10 arb. units. This was done for two purposes: a) to reduce the chances of value of

Lyt at MoI of 1 and that of Lys at MoI of 2 dropping to zero in stochastic simulations; and b) in order to make comparison of parameter sets and equilibrium values of proteins visually feasible. For both types of searches, simulations were carried out for time 100 arb. units. There was a possibility of a system of equations, defining a particular model, not reaching equilibrium by 100 arb. units for a given parameter set. In order to eliminate such parameter sets, a final simulation was done for 10^5 arb. units. Only few parameter sets turned out to not had reached equilibrium, and all of such parameter sets produced negative DSQ.

References

[1] Court DL, Oppenheim AB, Adhya SL A new look at bacteriophage lambda genetic networks. J Bacteriol. 2007; 189: 298–304.

[2] Kourilsky P Lysogenization by bacteriophage lambda. I. Multiple infection and the lysogenic response. Mol Gen Genet. 1973; 122: 183–195.

[3] Kobiler O, Rokney A, Friedman N, Court DL, Stavans J, Oppenheim AB Quantitative kinetic analysis of the bacteriophage lambda genetic network. Proc Natl Acad Sci U S A. 2005; 102: 4470–4475.

[4] Avlund M, Dodd IB, Semsey S, Sneppen K, Krishna S Why do phage play dice? J Virol. 2009; 83: 11416–11420.

[5] Kourilsky P Lysogenization by bacteriophage lambda. II. Identification of genes involved in the multiplicity dependent processes. Biochimie. 1974; 56: 1517–1523.

[6] Weitz JS, Mileyko Y, Joh RI, Voit EO Collective decision making in bacterial viruses. Biophys J. 2008; 95: 2673–2680.

[7] Hawley D, McClure WR Mechanism of activation of transcription initiation from the lambda P_{RM} promoter. J. Mol. Biol. 1982; 157: 493–525.

[8] Shih MC, Gussin GN Mutations affecting two different steps in transcription initiation at the phage *PRM* promoter. Proc Natl Acad Sci USA. 1983; 80: 496–500.

[9] Rosenberg M, Court D, Shimatake H, Brady C, and Wulff DL The relationship between function and DNA sequence in an intercistronic regulatory region in phage lambda. 1978 Nature 272:414–423.

[10] Cheng SW, Court DL, Friedman DI Transcription termination signals in the nin region of bacteriophage λ: identification of Rho-dependent termination regions. 1995 Genetics 140:875887.

[11] Costantino N, Zuber M, Court D Analysis of mutations in the *ninR* region of bacteriophage lambda that bypass a requirement for lambda N antitermination. 1990 J. Bacteriol. 172:46104615.

[12] Roberts JW, Yarnell W, Bartlett E, Guo J, Marr M, Ko DC, Sun H, Roberts CW Antitermination by bacteriophage lambda Q protein. Cold Spring Harbor Symp. Quant. Biol. 1998 63:319–325.

[13] Banuett F, Hoyt MA, McFarlane L, Echols H, Herskowitz I hflB, a new Escherichia coli locus regulating lysogeny and the level of bacteriophage lambda cII protein. J Mol Biol. 1986; 187: 213–224.

[14] Kobiler O, Rokney A, Oppenheim AB Phage lambda CIII: a protease inhibitor regulating the lysis-lysogeny decision. PLoS One. 2007; 2:e363.

[15] Schmeissner U, Court D, McKenney K, Rosenberg M Positively activated transcription of lambda integrase gene initiates with UTP in vivo. 1981 Nature 292:173–175.

[16] Schmeissner U, Court D, Shimatake H, Rosenberg M Promoter for the establishment of repressor synthesis in bacteriophage λ. Proc Natl Acad Sci USA. 1980; 77: 3191–3195.

[17] Hoopes BC, McClure WR A cII-dependent promoter is located within the Q gene of bacteriophage lambda. Proc Natl Acad Sci U S A. 1985; 82: 3134–3138.

[18] Ho YS, Rosenberg M Characterization of a third, cII-dependent, coordinately activated promoter on phage lambda involved in lysogenic development. J Biol Chem. 1985; 260: 11838–11844.

[19] Ho Y, Lewis M, Rosenberg M Purification and properties of a transcriptional activator. The cII protein of phage lambda. J Biol Chem. 1982; 257: 9128–9134.

[20] Jain D, Kim Y, Maxwell KL, Beasley S, Zhang R, Gussin GN, Edwards AM, Darst SA Crystal structure of bacteriophage lambda cII and its DNA complex. Molecular Cell. 2005; 19: 259–269.

[21] Elowitz MB, Levine AJ, Siggia ED, Swain PS Stochastic gene expression in a single cell. Science. 2002; 297: 1183–1186.

[22] Golding I, Paulsson J, Zawilski SM, Cox EC Real-time kinetics of gene activity in individual bacteria. Cell. 2005; 123: 1025–1036.

[23] Gillespie DT Exact stochastic simulation of coupled chemical reactions. J Phys Chem. 1977; 81: 2340–2361.

[24] Avlund M, Krishna S, Semsey S, Dodd IB, Sneppen K. Minimal gene regulatory circuits for a lysis-lysogeny choice in the presence of noise. PLoS One. 2010; 5:e15037.

[25] Samad HE, Khammash M, Petzold L, Gillespie D Stochastic modelling of gene regulatory networks. 2005 Int. J. Robust Nonlinear Control 15:691–711

[26] Schubert RA, Dodd IB, Egan JB, Shearwin KE Cro's role in the CI–Cro bistable switch is critical for λ's transition from lysogeny to lytic development. 2007 GENES & DEVELOPMENT 21:2461–2472

[27] Svenningsen SL, Costantino N, Court DL, Adhya S On the role of Cro in lambda prophage induction. Proc Natl Acad Sci U S A. 2005; 102: 4465–4469.