bioRxiv preprint doi: https://doi.org/10.1101/154179; this version posted October 23, 2017. The copyright holder for this preprint (which was not certified by peer review) is the author/funder, who has granted bioRxiv a license to display the preprint in perpetuity. It is made available under aCC-BY 4.0 International license.

Coral *Symbiodinium* community composition across the Belize Mesoamerican Barrier Reef System is influenced by host species and thermal variability

Baumann JH[1*], Davies SW[1,2], Aichelman HE[1,3], Castillo KD[1]

[1]*Department of Marine Sciences, University of North Carolina at Chapel Hill, Chapel Hill, North Carolina, 27599-3300 United States of America*

[2] *Boston University Department of Biology, 5 Cummington Mall, Boston MA 02215*

[3] *Department of Biological Sciences, Old Dominion University, 302 Miles Godwin building, Norfolk VA, 23529*

[*]*Corresponding author: baumannj@live.unc.edu, 513-306-1516, ORCID ID: 0000-0003-0113-0491*

bioRxiv preprint doi: https://doi.org/10.1101/154179; this version posted October 23, 2017. The copyright holder for this preprint (which was not certified by peer review) is the author/funder, who has granted bioRxiv a license to display the preprint in perpetuity. It is made available under aCC-BY 4.0 International license.

Abstract

Reef-building corals maintain a symbiotic relationship with dinoflagellate algae of the genus *Symbiodinium* and this symbiosis is vital for the survival of the coral holobiont. *Symbiodinium* community composition within the coral host has been shown to influence a coral's ability to resist and recover from stress. A multitude of stressors including ocean warming, ocean acidification, and eutrophication have been linked to global scale decline in coral health and cover in recent decades. Three distinct thermal regimes ($high_{TP}$, mod_{TP}, and low_{TP}) following an inshore-offshore gradient of declining average temperatures and thermal variation were identified on the Belize Mesoamerican Barrier Reef System (MBRS). Quantitative metabarcoding of the ITS-2 locus was employed to investigate differences and similarities in *Symbiodinium* genetic diversity of the Caribbean corals *Siderastrea siderea*, *S. radians*, and *Pseudodiploria strigosa* between the three thermal regimes. A total of ten *Symbiodinium* lineages were identified across the three coral host species. *Siderastrea siderea* associated with distinct *Symbiodinium* communities, however *Symbiodinium* communities of its congener, *S. radians*, and *P. strigosa*, were more similar to one another. Thermal regime played a role in defining *Symbiodinium* communities in *S. siderea* but not *S. radians* or *P. strigosa*. Against expectations, *Symbiodinium trenchii*, a symbiont known to confer thermal tolerance, was dominant only in *S. siderea* at one sampled offshore site and was rare inshore, suggesting that coral thermal tolerance in more thermally variable inshore habitats is achieved through alternative mechanisms. Overall, thermal parameters alone were likely not the only primary drivers of *Symbiodinium* community composition, suggesting that environmental variables unrelated to temperature (i.e., light availability, or nutrients) may play key roles in structuring

bioRxiv preprint doi: https://doi.org/10.1101/154179; this version posted October 23, 2017. The copyright holder for this preprint (which was not certified by peer review) is the author/funder, who has granted bioRxiv a license to display the preprint in perpetuity. It is made available under aCC-BY 4.0 International license.

coral-algal communities in Belize and that the relative importance of these environmental variables may vary by coral host species.

Keywords: coral, *Symbiodinium*, symbiosis, marine science, environmental variability

bioRxiv preprint doi: https://doi.org/10.1101/154179; this version posted October 23, 2017. The copyright holder for this preprint (which was not certified by peer review) is the author/funder, who has granted bioRxiv a license to display the preprint in perpetuity. It is made available under aCC-BY 4.0 International license.

Introduction

Obligate symbioses, relationships in which two or more organisms depend on one another for nutrition and survival, occur globally. Such symbioses are ubiquitous in plants and algae, i.e., Mycorrhiza [1], lichens [2], or insects, i.e., ants and bacteria [3]. The effects of climate change are expected to disrupt proper functioning of many symbioses, including that of reef-building corals [4-6], who's success depends on the symbiosis between the coral host and photosynthetic algae of the genus *Symbiodinium* [7-9]. Under stressful conditions this coral-*Symbiodinium* relationship breaks down, resulting in the loss of endosymbiont cells and/or photosynthetic pigments from the coral tissue in a process known as 'coral bleaching' [10]. Coral bleaching is most commonly associated with thermal stress [11-15] and is predicted to increase in frequency and severity as the world's climate continues to change [5, 16-21]. Increased thermal stress resulting from climate change combined with other local stressors such as eutrophication, habitat destruction, and overfishing has created an uncertain future for coral reefs [6, 13, 22]. In the Caribbean Sea, warming rates are higher than in any other tropical basin [23, 24] and coral cover has declined by as much as 80% in recent decades [25]. It has been predicted that Caribbean coral reefs may suffer biannual bleaching events within the next 20-30 years [17] and annual bleaching by 2040 [26].

In the face of a changing climate and widespread reef declines, corals will need to rapidly increase their thermal tolerance in order to persist in their current form [18, 27]. Coral thermal tolerance has been shown to be influenced by a coral's thermal history, which among other factors includes average environmental temperature and extent of thermal variability [28, 29]. On average, corals previously exposed to warmer temperatures show decreased mortality during bleaching events [30] and more stable growth patterns [31] compared with corals exposed to

bioRxiv preprint doi: https://doi.org/10.1101/154179; this version posted October 23, 2017. The copyright holder for this preprint (which was not certified by peer review) is the author/funder, who has granted bioRxiv a license to display the preprint in perpetuity. It is made available under aCC-BY 4.0 International license.

cooler temperatures, which exhibit greater mortality during heat stress and declining growth rates with increased temperatures [30, 31]. Exposure to greater daily thermal variation has also been shown to increase coral thermal tolerance [32] and has been associated with higher coral cover and slower mortality rates when compared to reefs exposed to less thermal variation [33]. Coral thermal tolerance is also heritable with larvae from parent colonies on lower-latitude (warmer) reefs showing a 10-fold increase in survival under heat stress when compared to larvae from cooler reefs locations [34]. A growing body of evidence suggests that the coral host plays a significant role in thermal tolerance [35-38], however, plasticity or specificity of coral-associated *Symbiodinium* and bacterial communities have also been shown to play a significant role in overall thermal tolerance [39-43].

The clades, lineages, or species of *Symbiodinium* hosted by a coral are critical to its survival and resilience to stress. The genus *Symbiodinium* is genetically diverse and comprises at least nine divergent clades [clades A-I; 44]. These clades can be further broken down into lineages, corresponding approximately to species level diversity [45], with some species conferring variable benefits [39, 44, 46]. In particular, some *Symbiodinium* are more thermally tolerant than others [9, 39, 47], specifically *Symbiodinium* clade D [48]. In contrast, clade C is more thermally sensitive [49-51], yet it includes *Symbiodinium thermophilum*, a thermally tolerant species within clade C endemic to the Red Sea [52]. This example illustrates that making clade level generalizations is problematic due to the physiological diversity within a single *Symbiodinium* clade [53]. Specific lineages within clades can also confer various advantages. For example, C1 enhances growth rate [54], *S. thermophilum* confers heat tolerance [52], and B2 confers cold tolerance [55]. Additionally, species D1a (*Symbiodinium trenchii)* has been shown to be both heat tolerant [56, 57], and cold tolerant [47]. However, the increased thermal tolerance

bioRxiv preprint doi: https://doi.org/10.1101/154179; this version posted October 23, 2017. The copyright holder for this preprint (which was not certified by peer review) is the author/funder, who has granted bioRxiv a license to display the preprint in perpetuity. It is made available under aCC-BY 4.0 International license.

of a coral which predominantly hosts clade D *Symbiodinium* appears to come at a cost of lower lipid stores, reproductive potential, growth, and carbon fixation rates compared with corals that host other clades [58-61]. Due to the high levels of variation in coral host-*Symbiodinium* interactions, it is essential to identify which lineages are present in order to help predict how a coral may respond to environmental stressors.

The majority of coral species host one dominant *Symbiodinium* lineage [44, 62, 63] along with several non-dominant lineages [64], each proliferating primarily by asexual cloning [53]. However, other corals can host multiple dominant lineages or clades [39, 53]. Recent advances in genetic techniques, especially next-generation sequencing (NGS), have allowed researchers to identify cryptic and low-abundance symbionts comprising 0.1% or more of the total *Symbiodinium* community within a host [37, 65]. It is important to understand these low-abundance *Symbiodinium*, as they have the potential to play important roles in coral-algal holobiont physiology under ambient and stressful conditions [66-68, but see also 69]. Identifying trends in *Symbiodinium* community variation (including cryptic or low abundance lineages) within and between species across a coral reef may allow for a better understanding of the role of *Symbiodinium* communities in modulating coral response to environmental variation.

Symbiodinium communities have been shown to vary regionally [between reef systems; 61, 70, 71], locally [within a reef system; 70], temporally [across time on the same reef; 72], and within a colony [71]. Studies of this variation have revealed geographically endemic lineages of *Symbiodinium* which may play a significant role in local and regional scale coral survival and stress tolerance [39, 71, 73]. While temperature stress may play a role in structuring *Symbiodinium* communities [74], variations in other environmental factors have also been shown to drive *Symbiodinium* community composition. For example, physical processes and total

bioRxiv preprint doi: https://doi.org/10.1101/154179; this version posted October 23, 2017. The copyright holder for this preprint (which was not certified by peer review) is the author/funder, who has granted bioRxiv a license to display the preprint in perpetuity. It is made available under aCC-BY 4.0 International license.

suspended solids (a proxy for nutrients and flow) drive *Symbiodinium* associations within the *Orbicella annularis* species complex in Belize and Panama [70]; however, on a regional scale (e.g., the entire Caribbean Sea), *O. annularis Symbiodinium* communities differed based on patterns of chronic thermal stress [75]. Additionally, the presence of several subclades of *Symbiodinium* correlated with other environmental parameters, such as cooler summers, nutrient loading, and turbidity [75]. Taken together, these studies demonstrate that variation in *Symbiodinium* communities can be driven by a variety of environmental parameters and may be specific to each coral species in each specific environment.

The majority of Caribbean *Symbiodinium* biogeography studies have focused on the *Orbicella* species complex [70, 71, 75] as *Orbicella* spp. has experienced significant declines over the last two decades [76] and are now listed as 'threatened' under the Endangered Species Act. However, the variation in *Symbiodinium* communities of other more stress tolerant corals, such as *Sidereastrea siderea* and *S. radians* [77-82], remain relatively understudied. Here, we assess *Symbiodinium* community composition in three species of ubiquitous Caribbean corals (*Siderastrea siderea*, *S. radians*, and *Pseudodiploria strigosa*) across three distinct thermal regimes along the Belize Mesoamerican Barrier Reef System (MBRS) previously shown to influence coral community composition [83]. Coral-associated *Symbiodinium* communities were examined across an inshore-offshore thermal gradient and a latitudinal gradient to elucidate the role that coral species, local habitat, and thermal regime play in structuring *Symbiodinium* communities in the western Caribbean Sea.

Methods:

Site selection and characteristics

bioRxiv preprint doi: https://doi.org/10.1101/154179; this version posted October 23, 2017. The copyright holder for this preprint (which was not certified by peer review) is the author/funder, who has granted bioRxiv a license to display the preprint in perpetuity. It is made available under aCC-BY 4.0 International license.

Ten sites along the Belize MBRS were selected. These sites were previously characterized into three thermally distinct regimes (low_{TP}, mod_{TP}, $high_{TP}$) and exhibited variations in coral species diversity and richness [83]. $High_{TP}$ sites (inshore) were characterized by larger annual temperature variation, higher annual maximum temperatures, and are exposed to temperatures above the regional bleaching threshold of 29.7°C (Aronson et al., 2002) more often than mod_{TP} sites (mid-channel reefs) and low_{TP} sites (offshore) [83]. $High_{TP}$ sites were dominated by stress tolerant and weedy coral species while corals representing all four coral life histories [stress tolerant, weedy, competitive, and generalist; 82] were present in low_{TP} and mod_{TP} sites [83].

Sample Collection

In November 2014, five to ten (quantity depended on local availability) coral tissue microsamples (approx. 2 mm diameter) were collected at 3 to 5 m depth from three coral species (*Siderastrea siderea, S. radians, and Pseudodiploria strigosa*) at nine sites across four latitudes along the Belize MBRS (Fig 1; Table 1). Each latitudinal transect contained a low_{TP}, mod_{TP}, and $high_{TP}$ site. The transects from north to south were: Belize City, Dangriga, Placencia, and Punta Gorda (Fig 1). All three sites within the Punta Gorda and Placencia transects were sampled, but only the low_{TP} and $high_{TP}$ sites were sampled along the Belize City and Dangriga transects due to time constraints. Samples collected at the Belize City $high_{TP}$ site were collected in October 2015, as no corals were located in the area in 2014, but patch reefs were located in 2015. Coral microsamples were collected at least 1m apart from one another to randomize micro-environmental and host genetic effects in order to attain more site-specific representative samples. Microsamples were collected from colony edges to avoid unnecessary damage to the

bioRxiv preprint doi: https://doi.org/10.1101/154179; this version posted October 23, 2017. The copyright holder for this preprint (which was not certified by peer review) is the author/funder, who has granted bioRxiv a license to display the preprint in perpetuity. It is made available under aCC-BY 4.0 International license.

larger colony and to limit effects of *Symbiodinium* zonation within an individual [71]. Tissue microsamples were placed on ice immediately following collection for transport to mainland Belize. Microsamples were then preserved in 96% ethanol and stored on ice at –20°C, and transported on ice to the coral ecophysiology lab at the University of North Carolina at Chapel Hill and stored at −20°C until DNA isolation.

Sea Surface Temperature

Daily 1-km horizontal resolution sea surface temperature (SST) estimates were acquired from the NASA Jet Propulsion Laboratory's Multi-Scale High Resolution SST (JPL MUR SST) product via NOAA Environmental Research Division's Data Access Program (ERDDAP- https://coastwatch.pfeg.noaa.gov/erddap/index.html) [84] and analyzed following Baumann et al [83]. Several additional temperature parameters were taken into account for this study, including: annual degree heating days (similar to degree heating weeks, as per Gleeson and Strong [85]), annual minimum temperature, annual average temperature, annual winter average temperature, and annual summer average temperature. Values for these parameters within the three thermal regimes are reported in Table S1.

DNA Extraction

Coral holobiont (coral, algae, and microbiome) DNA was isolated from each sample following a modified phenol-chloroform [86-88] method described in detail by Davies et al (2013). Briefly, DNA was isolated by immersing the tissue in digest buffer (100 mM NaCL, 10mM Tris-Cl pH 8.0, 25 mM EDTA pH 9.0, 0.5% SDS, 0.1 $mgml^{-1}$ Proteinase K, and 1 μgml^{-1} RNaseA) for 1 h at 42°C followed by a standard phenol-chloroform extraction. Extracted DNA

bioRxiv preprint doi: https://doi.org/10.1101/154179; this version posted October 23, 2017. The copyright holder for this preprint (which was not certified by peer review) is the author/funder, who has granted bioRxiv a license to display the preprint in perpetuity. It is made available under aCC-BY 4.0 International license.

was confirmed on an agarose gel and quantified using a Nanodrop 2000 Spectrophotometer (Thermo Scientific).

PCR amplification and metabarcoding

The ITS-2 region (350 bp) was targeted and amplified in each sample using custom primers that incorporated *Symbiodinium* specific ITS-2-dino-forward and its2rev2-reverse regions [65, 73, 89]. Each primer was constructed with a universal linker, which allowed for the downstream incorporation of Illumina specific adapters and barcodes during the second PCR as well as four degenerative bases whose function was to increase the complexity of library composition. The forward primer was 5'-<u>GTCTCGTCGGCTCGG</u> + *AGATGTGTATAAGAGACAG* + NNNN + **CCTCCGCTTACTTATATGCTT**-3' where the underlined bases are the 5'- universal linker, italicized bases indicate spacer sequences, N's denote degenerative bases and the bold bases are the ITS-2-dino. The reverse primer was 5'-<u>TCGTCGGCAGCGTCA</u> + *AGATGTGTATAAGAGACAG* + NNNN + **GTGAATTGCAGAACTCGTG**-3'.

Each 20uL PCR reaction contained 5-100 ng DNA template, 12.4 µL MilliQ H_2O, 0.2 µM dNTPs, 1µM forward and 1µM reverse primers, 1X *Extaq* buffer, and 0.5 U (units) *Extaq* polymerase (Takara Biotechnology). PCR cycles were run for all samples using the following PCR profile: 95°C for 5 min, 95°C for 40 s, 59°C for 2 min, 72°C for 1 min per cycle and a final elongation step of 72°C for 7 min. The optimal number of PCR cycles for each sample was determined from visualization of a faint band on a 2% agarose gel (usually between 22 and 28 cycles) as per Quigley et al. (2014). PCR products were cleaned using GeneJET PCR purification kits (Fermentas Life Sciences) and then a second PCR reaction was performed to

bioRxiv preprint doi: https://doi.org/10.1101/154179; this version posted October 23, 2017. The copyright holder for this preprint (which was not certified by peer review) is the author/funder, who has granted bioRxiv a license to display the preprint in perpetuity. It is made available under aCC-BY 4.0 International license.

incorporate custom barcode-primer sequences [65] modified for Illumina Miseq as in Klepac et al. [90]. Custom barcode primer sequences included 5'-*Illumina adaptor* + 6 bp **barcode sequence** + one of two universal linkers-3' (e.g.: 5'- *CAAGCAGAAGACGGCATACGAGAT* + **GTATAG** + GTCTCGTGGGCTCGG-3', or 5'- *AATGATACGGCGACCACCGAGATCTACAC* + **AGTCAA** + TCGTCGGCAGCGTC-3'). Following barcoding, PCR samples were visualized on a 2% agarose gel and pooled based on band intensity (to ensure equal contributions of each sample in the pool). The resulting pool was run on a 1% SYBR Green (Invitrogen) stained gel for 60 minutes at 90 volts and 120 mAmps. The target band was excised, soaked in 30 uL of milli-Q water overnight at 4°C, and the supernatant was submitted for sequencing to the University of North Carolina at Chapel Hill High Throughput Sequencing Facility across two lanes of Illumina MiSeq (one 2x250, one 2x300). The two lanes produced similar mapping efficiencies (73% and 73%, respectively; Table S3).

Bioinformatic Pipeline

The bioinformatic pipeline used here builds upon previous work by Quigley et al. [65] and Green et al. [73]. Raw sequences were renamed to retain sample information and then all forward (R1) and reverse (R2) sequences were concatenated into two files, which were processed using CD-HIT-OTU[91]. CD-HIT-OTU clusters concatenated reads into identical groups at 100% similarity for identification of operational taxonomic units (OTUs). Each sample was then mapped back to the resulting reference OTUs and an abundance count for each sample across all OTUs was produced. A BLASTn search of each reference OTU was then run against the GenBank (NCBI) nucleotide reference collection using the representative sequence from each OTU to identify which *Symbiodinium* lineage was represented by each OTU (Table S2).

bioRxiv preprint doi: https://doi.org/10.1101/154179; this version posted October 23, 2017. The copyright holder for this preprint (which was not certified by peer review) is the author/funder, who has granted bioRxiv a license to display the preprint in perpetuity. It is made available under aCC-BY 4.0 International license.

The phylogeny of representative sequences of each distinct *Symbiodinium* OTU was constructed using the PhyML tool [92, 93] within Geneious version 10.0.5 (http://geneious.com) [94]. PhyML was run using the GTR+I model (chosen based on delta AIC values produced from jModelTest [92, 95]) to determine the maximum likelihood tree. The TreeDyn tool in Phylogeny.fr was used to view the tree (Fig 2) [96-98]. The reference sequences included in the phylogeny were accessed from GenBank (Table S6).

Statistical Analysis

OTU abundance analysis used the R [99] package *MCMC.OTU* and followed methods described in Green et al. [73]. First, outlier samples with low sequence coverage (total log counts ≥2.5 standard deviations below the mean of all samples) were identified and removed, which removed 3 samples. Next, rare OTUs (<0.1% of the global sum of counts [as per 65]) were identified and discarded leaving 56 of the original 5,132 OTUs. Many remaining OTUs were identified as having the same *Symbiodinium* lineage (i.e., C1 or D1a) and these OTUs were regressed against one another. Positive correlations between OTUs within a lineage may indicate paralogous loci from the same genome [37, 73]. As a result, reads from OTUs within the same lineage that showed a positive R^2 and significant *p*-value following linear regression were pooled in order to control for possible overestimation of biodiversity [100]. Pooling resulted in a final OTU table containing ten OTUs (Table S2). Raw reads, trimmed reads, mapped reads, and percentage of reads mapped per species were calculated and reported in Table 2. Final pooled OTUs were run through the MCMC.OTU package in R and fit to a model that included fixed effect for host species, collection site, and thermal regime (Table S4). Differences between fixed effects were calculated based on their sampled posterior distributions and statistical significance

bioRxiv preprint doi: https://doi.org/10.1101/154179; this version posted October 23, 2017. The copyright holder for this preprint (which was not certified by peer review) is the author/funder, who has granted bioRxiv a license to display the preprint in perpetuity. It is made available under aCC-BY 4.0 International license.

was calculated as per Matz et al. [101]. OTU count data were converted to relative abundances (%), which were used to generate Fig 3 (Table S5).

To visualize differences in symbiont communities between temperature regimes, latitude, and species, principal component analyses (PCA) were performed on all OTUs that passed filtering using the *vegan* package in R [102]. Count data were transformed using Bray-Curtis similarity and were used as input for PCA. PERMANOVA was carried out on each PCA using the *adonis* function of the *vegan* package in R [102].

Results

Symbiodinium diversity and abundance across the Belize MBRS

Our analysis produced 118,834 unique sequences of which 89,211 mapped to 10 OTUs (Table 1). The dominant OTU (hereafter referred to as lineage) in *S. siderea* was C1.I (74.39%), while B1.I dominated *S. radians* (70.31%) and *P. strigosa* (51.74%) samples (Table S5, Fig 3). Nine out of ten *Symbiodinium* lineages were present in *S. siderea* and *P. strigosa* while all ten were present in *S. radians* (Table S5). The four most abundant lineages in *S. siderea* were C1.I, C1.III, D1a, and B1.I (74.39%, 12.94%, 9.29%, and 2.94%, respectively; Table S5, Fig 3A) and date of collection did not impact the dominate *Symbiodinium* lineages (all samples collected in 2014 except for Belize City high$_{TP}$ which were collected in 2015; Fig 3). *Symbiodinium* D1a (*S. trenchii*) was most abundant in *S. siderea* at low$_{TP}$ sites, particularly the low$_{TP}$ site along the most southern Punta Gorda transect (Table S5, Fig 3A) and lineage C1.III was more abundant in central and northern Belize (Belize City and Dangriga transects) compared to southern Belize (Figs 1, 3). Lineages C1.II, B1.II, G3, A4a, and B.BG were also present in *S. siderea* (Table S5, Fig 3A).

bioRxiv preprint doi: https://doi.org/10.1101/154179; this version posted October 23, 2017. The copyright holder for this preprint (which was not certified by peer review) is the author/funder, who has granted bioRxiv a license to display the preprint in perpetuity. It is made available under aCC-BY 4.0 International license.

The four most abundant lineages in *S. radians* were B1.I, C1.I, B1.II, and C1.II (70.31%, 13.41%, 6.54%, and 2.19% respectively; Table S5, Fig 3B). B1.I was the dominant symbiont across all thermal regimes and all latitudes, but C1.I and C1.II were the most abundant *Symbiodinium* lineages in several samples from the central Placencia transect (Table S5, Fig 3B). Lineage C1.II was only present in proportions above 1% in 2 samples, both from the mod_{TP} site along the Placencia transect (Table S5, Fig 3B). D1a (*S. trenchii*) was only present in low abundance in *S. radians* (Table S5, Fig 3B). Lineages C1.III, D1a, G3, A4a, B.BG, and C3 were also present in *S. radians* (Table S5, Fig 3B).

The four most abundant lineages in *P. strigosa* were B1.I, C1.I, C1.II, and C1.III (51.74%, 21.87%, 16.92%, and 6.24%, respectively). C1.II was the most abundant lineage at the low_{TP} site in the Placencia transect, but B1.I was most abundant at all other sites (Table S5, Fig 3). C1.I was the second most abundant lineage in mod_{TP} and $high_{TP}$ sites and C1.II was the second most abundant lineage in the low_{TP} site (Table S5, Fig 3C). D1a (*S. trenchii*) was only present in low abundance in *P. strigosa* (Table S5, Fig 3C). Lineages D1a, B1.II, G3, A4a, and B.BG were also present in *P. strigosa* (Table S5, Fig 3C).

Host species specificity in Symbiodinium community composition

Symbiodinium communities differed significantly between *S. siderea* and the other two coral host species (Table S4, Fig 4A, *p*-value=0.001). This difference appears to be driven by higher relative abundances of C1.I and D1a (*S. trenchii*) in *S. siderea* compared to *P. strigosa* and *S. radians* (Fig 3A). Within *S. siderea*, *Symbiodinium* communities varied by thermal regime site, and latitude (Table S4, Fig 4B). *Symbiodinium* communities in *S. radians* and *P. strigosa* did not differ significantly by thermal regime, site, or latitude (Table S4).

bioRxiv preprint doi: https://doi.org/10.1101/154179; this version posted October 23, 2017. The copyright holder for this preprint (which was not certified by peer review) is the author/funder, who has granted bioRxiv a license to display the preprint in perpetuity. It is made available under aCC-BY 4.0 International license.

Discussion

Host-specificity drives Symbiodinium community composition

This study indicates that *Siderastrea siderea* hosts significantly different *Symbiodinium* communities from *S. radians* and *P. strigosa* on the Belize MBRS (Table S5, Fig 3), providing evidence to support previous findings of high rates of host-specific *Symbiodinium* associations within the Caribbean Sea where at least 62 genetically different *Symbiodinium* have been found and where >50% of *Symbiodinium* lineages have been found in only one coral genus [53, 103]. This trend contrasts that of the Indo-Pacific where *Symbiodinium* diversity is lower and a few host-generalist *Symbiodinium* associate with many corals [103]. The three coral species studied here were found to be associated with the two most abundant *Symbiodinium* clades in the Caribbean [104]: B1 in *S. radians* and *P. strigosa* colonies and C1 in *S. siderea* (Table S5, Fig 3). These associations are consistent with previous studies that identified the same dominant *Symbiodinium* in these species on the Belize MBRS [103]. However, our data contrast with findings of other studies on the same species elsewhere in the Caribbean which have identified other dominant *Symbiodinium* lineages in these host species [e.g., C3 and B5a in S. siderea and B5 and C46a in S. radians; 103, 105]. This supports previous evidence for regional endemism within the Caribbean Sea [103, 106]. *Symbiodinium* clade G, a lineage found in Octocorals [107], Foraminifera [108] , and Pacific Porites spp. [109], was also observed to be a minor player in the symbiont communities of *S. radians* and *P. strigosa* (Table S5, Fig 3). This results indicates that this clade is present in the Caribbean Sea, however because this clade is not traditionally associated with Scleractinian corals, we cannot be confident that its presence is as a symbiont, a contaminant from the local environment, or that it was ingested as food. Differences in

bioRxiv preprint doi: https://doi.org/10.1101/154179; this version posted October 23, 2017. The copyright holder for this preprint (which was not certified by peer review) is the author/funder, who has granted bioRxiv a license to display the preprint in perpetuity. It is made available under aCC-BY 4.0 International license.

Symbiodinium communities between coral host species appear to be driven by the relative abundance of B1 and C1 as well as the presence or absence of D1a (Fig 4A). Presence of multiple lineages of C1 and B1 in this study (Table S2, Table S5) support previous evidence of phylogenetic partitioning, or highly specific lineages, in clades B and C [71, 103, 110, 111]. Interestingly, *Symbiodinium* communities were more similar between *S. radians* and *P. strigosa* than between *S. radians* and *S. siderea,* indicating that members of the same coral genus do not necessarily share a common dominant *Symbiodinium* partner, a phenomenon previously observed in *Siderastrea spp.* and *Orbicella spp.* across the Caribbean Sea [103]. Finney et al [103] show that *S. radians* and *S. siderea* exhibit different dominant *Symbiodinium* in both Belize (B5 vs. C1) and Barbados (B5 vs. C3). A similar trend is seen in *O. faveolata* and *O. annularis* (B17 vs. D1a in Belize and C7 vs. B1 in Barbados) [103]. These results suggest that *Symbiodinium* communities may not be influenced by coral host genus. Previously, it has been shown that symbiont acquisition strategy does not play a large role in determining *Symbiodinium* communities, however geographic distance and differences in environmental variables between habitats have been proposed as possible drivers of symbiont community composition [53, 103]. Coral life history strategy [82] or energetic demands may also play a role. Future research is needed to better understand this process. Differences in *Symbiodinium* communities between *S. siderea* and *S.* radians/ P. *strigosa* is suggestive that corals species are differentially affected by the environmental gradients sampled here.

Thermal regime affects Symbiodinium community composition in S. siderea, but has no effect on other species

bioRxiv preprint doi: https://doi.org/10.1101/154179; this version posted October 23, 2017. The copyright holder for this preprint (which was not certified by peer review) is the author/funder, who has granted bioRxiv a license to display the preprint in perpetuity. It is made available under aCC-BY 4.0 International license.

Symbiodinium communities varied significantly across thermal regimes in *S. siderea* (Table S4, Fig 4B), supporting previous evidence that habitat type [112] and temperature [113] are correlated with differences in *Symbiodinium* associations. *Symbiodinium* communities did not differ significantly across thermal regimes in *S. radians* or *P. strigosa*, possibly due to low sample size at each sampling site for these two coral species (Table 1; Fig 3). *Symbiodinium* communities did not differ between thermal regimes in *S. radians* or *P. strigosa* (Table S4), In this study, only temperature parameters were quantified, yet it is likely that they did not account for all of the variance in *Symbiodinium* communities for any coral host species investigated as other local impacts, such as nutrients, light availability, and/or sedimentation may play a role [48, 114-118].

Role of local impacts on Symbiodinium communities

It has previously been shown that prevalence of specific *Symbiodinium* types within a coral host species can differ based on local scale environmental parameters such as nutrient loading and turbidity [75]. While these variables were not quantified in this study, chlorophyll-a (*chl-a*), a proxy for nutrient input, has previously been shown to be positively correlated with thermal regime in Belize. Specifically, $high_{TP}$ sites had higher *chl-a* than low_{TP} sites across the Belize MBRS [83]. Therefore, a PERMANOVA that shows significant differences in *Symbiodinium* communities between thermal regimes includes a confounding effect of nutrient input (Table S4). Since significant differences in *Symbiodinium* communities occurred between thermal regimes in *S. siderea* only, it is possible that nutrient loading or turbidity played a role in *Symbiodinium* variation within *S. siderea*, but may not have significantly influenced *Symbiodinium* communities in *S. radians* or *P. strigosa*. However, the magnitude of this

bioRxiv preprint doi: https://doi.org/10.1101/154179; this version posted October 23, 2017. The copyright holder for this preprint (which was not certified by peer review) is the author/funder, who has granted bioRxiv a license to display the preprint in perpetuity. It is made available under aCC-BY 4.0 International license.

influence cannot be teased apart from the effect of thermal regime without extensive quantification of nutrient concentrations across the Belize MBRS.

Coral host may play a role in thermal tolerance

In this study, the relative abundance of thermally tolerant *Symbiodinium* D1a (*S. trenchii*) was not associated with inshore reefs as in Toller at al. [119], marginal reefs as in Hennige et al. [120] and LaJeunesse et al. [104], sites exposed to the highest temperatures as in Baker et al. [48], or sites exposed to the widest range of thermal fluctuations as in Abrego et al. [121], Fabricius et al. [122], and LaJeunesse et al. [40, 123]. Instead, *S. trenchii* was most prevalent at the southern Punta Gorda low_{TP} and mod_{TP} sites (Table S1, S5, Fig 3). Since *S. trenchii* is often associated with recently bleached and/or recovering corals [48, 124], but can be replaced or outcompeted following recovery [105], it is possible that a recent bleaching event may have occurred at these sites, however these data are not available. In summer 2014, temperatures at all sites in this study exceeded the published local bleaching threshold of 29.7°C [86] (Fig S1), yet *S. trenchii* was only the dominant symbiotic partner in eight *S. siderea* samples, all of which were from the same two sites (Punta Gorda low_{TP} and mod_{TP}; Fig 3). The presence of *S. trenchii* in several *P. strigosa* corals taken from the Punta Gorda mod_{TP} site provides additional evidence of temperature stress at these sites (Punta Gorda low_{TP} and mod_{TP}). This result suggests that corals at these sites had either bleached recently or retained *S. trenchii* as a dominant symbiont following past bleaching, possibly as a way to increase thermal tolerance [125]. Lower thermal tolerance has been proposed previously for *S. siderea [80]* and *Orbicella faveolata [126]* at these sites (Punta Gorda low_{TP} and mod_{TP}) and may be due to nutrients, sediments, and low salinity terrestrial runoff exported from Guatemala and Honduras by currents that wash over this area of

bioRxiv preprint doi: https://doi.org/10.1101/154179; this version posted October 23, 2017. The copyright holder for this preprint (which was not certified by peer review) is the author/funder, who has granted bioRxiv a license to display the preprint in perpetuity. It is made available under aCC-BY 4.0 International license.

the Belize MBRS [126-128]. Low abundances of *S. trenchii* at other low_{TP} and mod_{TP} sites corroborates this hypothesis, as estimated thermal stress occurred at all latitudes at roughly the same magnitude (Fig S1). Overall, lack of *S. trenchii* in $high_{TP}$ sites indicates that regardless of warmer and more variable conditions, these three coral species do not associate with this thermally tolerant symbiont. Therefore, presumed increased thermal tolerance at $high_{TP}$ sites may be due to local adaptation of the coral host [37, 129] or strains of *Symbiodinium* [130, 131]. Further research into coral host and symbiont local adaptation would be needed to confirm this hypothesis.

Conclusion

This study demonstrates that *Symbiodinium* communities associated with corals in Belize are dependent on both host species as well as environmental variables. *S. siderea Symbiodinium* communities were divergent from *S. radians* and *P. strigosa* (Fig 3; Fig 4A). Thermal regime played a role in driving *Symbiodinium* community composition in *S. siderea* but not *S. radians* or *P. strigosa*, suggesting that local impacts such as nutrients, sediment, or light availability may also influence *Symbiodinium* communities on the Belize MBRS. Additionally, low abundance of *S. trenchii* in inshore $high_{TP}$ sites indicates thermal tolerance at these sites must be conferred through alternative mechanisms, such as local adaptation.

Acknowledgements

We thank J. Watkins, L. Speare, and A. Knowlton for laboratory assistance and C. Berger for assistance with coding. We also thank NASA JPL and NOAA ERDAAP for access to MUR SST data used in this paper, Belize Fisheries Department for issuing research and collection permits,

bioRxiv preprint doi: https://doi.org/10.1101/154179; this version posted October 23, 2017. The copyright holder for this preprint (which was not certified by peer review) is the author/funder, who has granted bioRxiv a license to display the preprint in perpetuity. It is made available under aCC-BY 4.0 International license.

and Garbutt's Marine for providing local expert guides and boats for field research. This work was supported by the Rufford Foundation (http://www.rufford.org) Small Grant to JHB (15802-1); National Science Foundation (Oceanography) (nsf.gov) to KDC (OCE 1459522); Department of Defense NDSEG fellowship to JHB. The authors declare that no conflict of interests exists.

References

1. Meyer FH (1966) Mycorrhiza and other plant symbioses. Symbiosis 1: 171-255.
2. Honegger R (1991) Functional aspects of the lichen symbiosis. Annual review of plant biology 42: 553-578.
3. Degnan PH, Lazarus AB, Brock CD, Wernegreen JJ (2004) Host–symbiont stability and fast evolutionary rates in an ant–bacterium association: Cospeciation of Camponotus species and their endosymbionts, Candidatus Blochmannia. Systematic Biology 53: 95-110.
4. Brosi GB, McCulley RL, Bush LP, Nelson JA, Classen AT, Norby RJ (2011) Effects of multiple climate change factors on the tall fescue–fungal endophyte symbiosis: infection frequency and tissue chemistry. New Phytologist 189: 797-805.
5. Coles SL, Brown BE (2003) Coral Bleaching-Capacity for Acclimatization and Adaptation. Advances in Marine Biology 46: 183-213.
6. Hoegh-Guldberg O, Mumby PJ, Hooten AJ, Steneck RS, Greenfield P, Gomez E, Harvell CD, Sale PF, Edwards AJ, Caldeira K, Knowlton N, Eakin CM, Iglesias-Prieto R, Muthiga N, Bradbury RH, Dubi A, Hatziolos ME (2007) Coral Reefs Under Rapid Climate Change and Ocean Acidification. Science 318: 1737-1742.
7. Muscatine L (1990) The role of symbiotic algae in carbon and energy flux in reef corals. In: Dubinsky, Z (ed.) Ecosystems of the World 25: Coral Reefs. Elsevier, New York, pp. 75-87
8. DeSalvo MK, Sunagawa S, Fisher PL, Voolstra CR, IGLESIAS-PRIETO R, Medina M (2010) Coral host transcriptomic states are correlated with Symbiodinium genotypes. Molecular Ecology 19: 1174-1186.
9. Warner ME, Fitt WK, Schmidt GW (1996) The effects of elevated temperature on the photosynthetic efficiency of zooxanthellae in hospite from four different species of reef coral: a novel approach. Plan, Cell and Environment 19: 291-299.
10. Glynn PW (1993) Coral reef bleaching: ecological perspectives. Coral Reefs 12: 1-17.
11. Hughes TP, Kerry JT, Álvarez-Noriega M, Álvarez-Romero JG, Anderson KD, Baird AH, Babcock RC, Beger M, Bellwood DR, Berkelmans R (2017) Global warming and recurrent mass bleaching of corals. Nature 543: 373-377.
12. Heron SF, Maynard JA, Ruben van Hooidonk C (2016) Warming Trends and Bleaching Stress of the World's Coral Reefs 1985–2012. Scientific reports 6.
13. Hughes TP, Baird AH, Bellwood DR, Card M, Connolly SR, Folke C, Grosberg R, Hoegh-Guldberg O, Jackson JBC, Kleypas J, Lough JM, Marshall P, Nystrom M, Palumbi SR, Pandolfi JM, Rosen B, Roughgarden J (2003) Climate change, human impacts, and the resilience of coral reefs. Science 301: 929-933.
14. Hoegh-Guldberg O (1999) Climate change, coral bleaching and the future of the world's coral reefs. Marine Freshwater Research 50: 839-866.
15. Wild C, Hoegh-Guldberg O, Naumann MS, Colombo-Pallotta MF, Ateweberhan M, Fitt WK, Iglesias-Prieto R, Palmer C, Bythell JC, Ortiz J-C, Loya Y, van Woesik R (2011) Climate change

bioRxiv preprint doi: https://doi.org/10.1101/154179; this version posted October 23, 2017. The copyright holder for this preprint (which was not certified by peer review) is the author/funder, who has granted bioRxiv a license to display the preprint in perpetuity. It is made available under aCC-BY 4.0 International license.

impedes scleractinian corals as primary reef ecosystem engineers. Marine and Freshwater Research 62: 205-215. doi: http://dx.doi.org/10.1071/MF10254

16. Wooldridge S, Done T, Berkelmans R, Jones R, Marshall P (2005) Precursors for resilience in coral communities in a warming climate: a belief network approach. Marine Ecology Progress Series 295: 157-169.
17. Donner SD, Knutson TR, Oppenheimer M (2007) Model-based assessment of the role of human-induced climate change in the 2005 Caribbean coral bleaching event. Proceedings of the National Academy of Sciences 104: 5483-5488.
18. Donner SD, Skirving WJ, Little CM, Oppenheimer M, Hoegh-Guldberg O (2005) Global assessment of coral bleaching and required rates of adaptation under climate change. Global Change Biology 11: 2251-2265.
19. Jokiel PL, Coles SL (1990) Response of Hawaiian and other Indo-Pacific reef corals to elevated temperature. Coral Reefs 8: 155-162.
20. D'Croz L, Mate JL, Oke JE (2001) Responses to elevated seawater temperature and UV radiation in the coral *Porites lobata* from upwelling and non-upwelling environments on the Pacific coast of Panama. Bulletin of Marine Science 69: 203-214.
21. McWilliams JP, Cote IM, Gill JA, Sutherland WJ, Watkinson AR (2005) Accelerating impacts of temperature-induced coral bleaching in teh Caribbean. Ecology 86: 2055-2060.
22. Frieler K, Meinshausen M, Golly A, Mengel M, Lebek K, Donner S, Hoegh-Guldberg O (2013) Limiting global warming to 2 [thinsp][deg] C is unlikely to save most coral reefs. Nature Climate Change 3: 165-170.
23. Chollett I, Müller-Karger FE, Heron SF, Skirving W, Mumby PJ (2012) Seasonal and spatial heterogeneity of recent sea surface temperature trends in the Caribbean Sea and southeast Gulf of Mexico. Marine Pollution Bulletin 64: 956-965.
24. Belkin IM (2009) Rapid warming of large marine ecosystems. Progress in Oceanography 81: 207-213.
25. Gardner TA, Cote IM, Gill JA, Grant A, Watkinson AR (2003) Long-term region-wide declines in Caribbean corals. Science 301: 958-960.
26. Van Hooidonk R, Maynard JA, Liu Y, Lee SK (2015) Downscaled projections of Caribbean coral bleaching that can inform conservation planning. Global Change Biology.
27. Barshis DJ (2015) Genomic Potential for Coral Survival of Climate ChangeCoral Reefs in the Anthropocene. Springer, pp. 133-146
28. Middlebrook R, Hoegh-Guldberg O, Leggat W (2008) The effect of thermal history on the susceptibility of reef-building corals to thermal stress. Journal of Experimental Biology 211: 1050-1056. doi: 10.1242/jeb.013284
29. Castillo KD, Helmuth BST (2005) Influence of thermal history on the response of Montastraea annularis to short-term temperature exposure. Marine Biology 148: 261 - 270.
30. Pineda J, Starczak V, Tarrant A, Blythe J, Davis K, Farrar T, Berumen M, da Silva JC (2013) Two spatial scales in a bleaching event: Corals from the mildest and the most extreme thermal environments escape mortality. Limnology and Oceanography 58: 1531-1545.
31. Castillo KD, Ries JB, Weiss JM, Lima FP (2012) Decline of forereef corals in response to recent warming linked to history of thermal exposure. Nature Climate Change 2: 756-760.
32. Oliver T, Palumbi S (2011) Do fluctuating temperature environments elevate coral thermal tolerance? Coral Reefs 30: 429-440.
33. Soto IM, Muller Karger FE, Hallock P, Hu C (2011) Sea Surface Temperature Variability in the Florida Keys and Its Relationship to Coral Cover. Journal of Marine Biology 2011: 10. doi: 10.1155/2011/981723

bioRxiv preprint doi: https://doi.org/10.1101/154179; this version posted October 23, 2017. The copyright holder for this preprint (which was not certified by peer review) is the author/funder, who has granted bioRxiv a license to display the preprint in perpetuity. It is made available under aCC-BY 4.0 International license.

34. Dixon GB, Davies SW, Aglyamova GV, Meyer E, Bay LK, Matz MV (2015) Genomic determinants of coral heat tolerance across latitudes. Science 348: 1460-1462.
35. Baird AH, Bhagooli R, Ralph PJ, Takahashi S (2009) Coral bleaching: the role of the host. Trends in Ecology & Evolution 24: 16-20.
36. Kenkel C, Meyer E, Matz M (2013) Gene expression under chronic heat stress in populations of the mustard hill coral (Porites astreoides) from different thermal environments. Molecular Ecology 22: 4322-4334.
37. Kenkel C, Goodbody-Gringley G, Caillaud D, Davies S, Bartels E, Matz M (2013) Evidence for a host role in thermotolerance divergence between populations of the mustard hill coral (Porites astreoides) from different reef environments. Molecular Ecology 22: 4335-4348.
38. Barshis DJ, Ladner JT, Oliver TA, Seneca FO, Traylor-Knowles N, Palumbi SR (2013) Genomic basis for coral resilience to climate change. Proceedings of the National Academy of Sciences 110: 1387-1392.
39. Rowan R, Knowlton N, Baker A, Jara J (1997) Landscape ecology of algal symbionts creates variation in episodes of coral bleaching. Nature 388: 265-269.
40. LaJeunesse TC, Smith, R., Walther, M., Pinzon, J., Pettay, D.T., McGinley, M., Aschaffenfurg, M., Medina-Rosas, P., Cupul-Magana, A.L., Perez, A.L., Reyes-Bonilla, H., and M.E. Warner (2010) Host-symbiont reconbination vs. natural selection in response of coral-dinoflagellate symbioses to environmental disturbance. . Proceedings of the Royal Society B.
41. Baker AC (2003) Flexibility and Specificity in Coral-Algal Symbiosis: Diversity, Ecology, and Biogeography of *Symbiodinium*. Annual Review of Ecology, Evolution, and Systematics 34: 661-689.
42. Silverstein RN, Cunning R, Baker AC (2015) Change in algal symbiont communities after bleaching, not prior heat exposure, increases heat tolerance of reef corals. Global Change Biology 21: 236-249.
43. Ziegler M, Seneca FO, Yum LK, Palumbi SR, Voolstra CR (2017) Bacterial community dynamics are linked to patterns of coral heat tolerance. Nature communications 8: 14213.
44. Coffroth MA, Santos SR (2005) Genetic diversity of symbiotic dinoflagellates in the genus Symbiodinium. Protist 156: 19-34.
45. LaJeunesse TC (2001) Investigating biodiversity, ecology, and phylogeny of endosymbiotic dinoflagellates in the genus *Symbiodinium* using the ITS region: In search of a 'species' level marker. Journal of Phycology 37: 866-880.
46. LaJeunesse T, Trench R (2000) Biogeography of two species of Symbiodinium (Freudenthal) inhabiting the intertidal sea anemone Anthopleura elegantissima (Brandt). The Biological Bulletin 199: 126-134.
47. Silverstein RN, Cunning R, Baker AC (2017) Tenacious D: Symbiodinium in clade D remain in reef corals at both high and low temperature extremes despite impairment. The Journal of Experimental Biology. doi: 10.1242/jeb.148239
48. Baker AC, Starger CJ, McClanahan TR, Glynn PW (2004) Corals' adaptive response to climate change. Nature 430: 741.
49. Rowan R (2004) Thermal adaptation in reef coral symbionts. Nature 430: 742.
50. Tchernov D, Gorbunov MY, de Vargas C, Yadav SN, Milligan AJ, Haggblom M, Falkowski PG (2004) Membrane lipids of symbiotic algae are diagnostic of sensitivity to thermal bleaching in corals. Proceedings of the National Academy of Sciences of the United States of America 101: 13531-13535.
51. Berkelmans R, Van Oppen MJ (2006) The role of zooxanthellae in the thermal tolerance of corals: a 'nugget of hope'for coral reefs in an era of climate change. Proceedings of the Royal Society of London B: Biological Sciences 273: 2305-2312.

bioRxiv preprint doi: https://doi.org/10.1101/154179; this version posted October 23, 2017. The copyright holder for this preprint (which was not certified by peer review) is the author/funder, who has granted bioRxiv a license to display the preprint in perpetuity. It is made available under aCC-BY 4.0 International license.

52. Hume BC, D'Angelo C, Smith EG, Stevens JR, Burt J, Wiedenmann J (2015) Symbiodinium thermophilum sp. nov., a thermotolerant symbiotic alga prevalent in corals of the world's hottest sea, the Persian/Arabian Gulf. Scientific reports 5: 8562.
53. Thornhill D, Howells E, Wham D, Steury T, Santos S (2017) Population genetics of reef coral endosymbionts (Symbiodinium, Dinophyceae). Molecular Ecology.
54. Little AF, Van Oppen MJ, Willis BL (2004) Flexibility in algal endosymbioses shapes growth in reef corals. Science 304: 1492-1494.
55. Thornhill DJ, Kemp DW, Bruns BU, Fitt WK, Schmidt GW (2008) Correspondence between Cold Tolerance and Temperate Biogeography in a Western Atlantic Symbiodinium (Dinophyta) Lineage1. Journal of Phycology 44: 1126-1135.
56. Jones AM, Berkelmans R, van Oppen MJ, Mieog JC, Sinclair W (2008) A community change in the algal endosymbionts of a scleractinian coral following a natural bleaching event: field evidence of acclimatization. Proceedings of the Royal Society of London B: Biological Sciences 275: 1359-1365.
57. LaJeunesse TC, Smith RT, Finney J, Oxenford H (2009) Outbreak and persistence of opportunistic symbiotic dinoflagellates during the 2005 Caribbean mass coral 'bleaching'event. Proceedings of the Royal Society of London B: Biological Sciences 276: 4139-4148.
58. Jones AM, Berkelmans R (2011) Tradeoffs to thermal acclimation: energetics and reproduction of a reef coral with heat tolerant Symbiodinium type-D. Journal of Marine Biology 2011.
59. Cunning R, Gillette P, Capo T, Galvez K, Baker AC (2015) Growth tradeoffs associated with thermotolerant symbionts in the coral Pocillopora damicornis are lost in warmer oceans. Coral Reefs 34: 155-160. doi: 10.1007/s00338-014-1216-4
60. Cantin NE, van Oppen MJ, Willis BL, Mieog JC, Negri AP (2009) Juvenile corals can acquire more carbon from high-performance algal symbionts. Coral Reefs 28: 405.
61. Kennedy EV, Foster NL, Mumby PJ, Stevens JR (2015) Widespread prevalence of cryptic Symbiodinium D in the key Caribbean reef builder, Orbicella annularis. Coral Reefs 34: 519-531.
62. Diekmann O, Bak R, Tonk L, Stam W, Olsen J (2002) No habitat correlation of zooxanthellae in the coral genus Madracis on a Curacao reef. Marine Ecology Progress Series 227: 221-232.
63. Baker AC, Rowan R, Knowlton N (1997) Symbiosis ecology of two Caribbean Acroporid corals. In: Lessios, HA, Macintyre, IG (eds.) Proceedings of the 8th International Coral Reef Symposium, vol. 2, Panama, pp. 1296-1300.
64. Silverstein RN, Correa AMS, Baker AC (2012) Specificity is rarely absolute in coral–algal symbiosis: implications for coral response to climate change. Proceedings of the Royal Society B: Biological Sciences 279: 2609-2618. doi: 10.1098/rspb.2012.0055
65. Quigley KM, Davies SW, Kenkel CD, Willis BL, Matz MV, Bay LK (2014) Deep-sequencing method for quantifying background abundances of Symbiodinium types: exploring the rare Symbiodinium biosphere in reef-building corals. Plos ONE 9: e94297.
66. Davy SK, Allemand D, Weis VM (2012) Cell biology of cnidarian-dinoflagellate symbiosis. Microbiology and Molecular Biology Reviews 76: 229-261.
67. Jones A, Berkelmans R (2010) Potential Costs of Acclimatization to a Warmer Climate: Growth of a Reef Coral with Heat Tolerant vs. Sensitive Symbiont Types. Plos ONE 5: e10437. doi: 10.1371/journal.pone.0010437
68. Correa AMS, McDonald MD, Baker AC (2009) Development of clade-specific Symbiodinium primers for quantitative PCR (qPCR) and their application to detecting clade D symbionts in Caribbean corals. Marine Biology 156: 2403-2411. doi: 10.1007/s00227-009-1263-5
69. Lee MJ, Jeong HJ, Jang SH, Lee SY, Kang NS, Lee KH, Kim HS, Wham DC, LaJeunesse TC (2016) Most Low-Abundance "Background" Symbiodinium spp. Are Transitory and Have Minimal Functional Significance for Symbiotic Corals. Microbial Ecology: 1-13.

bioRxiv preprint doi: https://doi.org/10.1101/154179; this version posted October 23, 2017. The copyright holder for this preprint (which was not certified by peer review) is the author/funder, who has granted bioRxiv a license to display the preprint in perpetuity. It is made available under aCC-BY 4.0 International license.

70. Garren M, Walsh SM, Caccone A, Knowlton N (2006) Patterns of association between Symbiodinium and members of the Montastraea annularis species complex on spatial scales ranging from within colonies to between geographic regions. Coral Reefs 25: 503-512.
71. Kemp DW, Thornhill DJ, Rotjan RD, Iglesias-Prieto R, Fitt WK, Schmidt GW (2015) Spatially distinct and regionally endemic Symbiodinium assemblages in the threatened Caribbean reef-building coral Orbicella faveolata. Coral Reefs 34: 535-547.
72. Warner ME, LaJeunesse TC, Robison JD, Thur RM (2006) The ecological distribution and comparative photobiology of symbiotic dinoflagellates from reef corals in Belize: Potential implications for coral bleaching. Limnology and Oceanography 51: 1887-1897.
73. Green EA, Davies SW, Matz MV, Medina M (2014) Quantifying cryptic Symbiodinium diversity within Orbicella faveolata and Orbicella franksi at the Flower Garden Banks, Gulf of Mexico. PeerJ 2: e386.
74. Pettay DT, Wham DC, Smith RT, Iglesias-Prieto R, LaJeunesse TC (2015) Microbial invasion of the Caribbean by an Indo-Pacific coral zooxanthella. Proceedings of the National Academy of Sciences 112: 7513-7518.
75. Kennedy EV, Tonk L, Foster NL, Chollett I, Ortiz J-C, Dove S, Hoegh-Guldberg O, Mumby PJ, Stevens JR (2016) Symbiodinium biogeography tracks environmental patterns rather than host genetics in a key Caribbean reef-builder, Orbicella annularis. Proc R Soc B, vol. 283. The Royal Society, pp. 20161938.
76. Miller J, Muller E, Rogers C, Waara R, Atkinson A, Whelan K, Patterson M, Witcher B (2009) Coral disease following massive bleaching in 2005 causes 60% decline in coral cover on reefs in the US Virgin Islands. Coral Reefs 28: 925.
77. Lirman D, Manzello D (2009) Patterns of resistance and resilience of the stress-tolerant coral Siderastrea radians (Pallas) to sub-optimal salinity and sediment burial. Journal of Experimental Marine Biology and Ecology 369: 72-77.
78. Lirman D, Fong P (2007) Is proximity to land-based sources of coral stressors an appropriate measure of risk to coral reefs? An example from the Florida Reef Tract. Marine Pollution Bulletin 54: 779-791.
79. Lirman D, Manzello D, Maciá S (2002) Back from the dead: the resilience of Siderastrea radians to severe stress. Coral Reefs 21: 291-292.
80. Castillo KD, Ries JB, Weiss JM (2011) Declining coral skeletal extension for forereef colonies of Siderastrea siderea on the Mesoamerican Barrier Reef System, Southern Belize. Plos ONE 6: e14615.
81. Guzman HM, Tudhope AW (1998) Seasonal variation in skeletal extension rate and stable isotopic ($^{13}C/^{12}C$ and $^{18}O/^{16}O$) composition in response to several environmental variables in the Caribbean reef coral *Siderastrea siderea*. Marine Ecology Progress Series 166: 109-118.
82. Darling ES, Alvarez-Filip L, Oliver TA, McClanahan TR, Côté IM (2012) Evaluating life-history strategies of reef corals from species traits. Ecology Letters 15: 1378-1386.
83. Baumann JH, Townsend JE, Courtney TA, Aichelman HE, Davies SW, Lima FP, Castillo KD (2016) Temperature Regimes Impact Coral Assemblages along Environmental Gradients on Lagoonal Reefs in Belize. Plos ONE 11: e0162098. doi: 10.1371/journal.pone.0162098
84. Simons R (2011) ERDDAP- The Envionmental Research Division's Data Access Program. .
85. Gleeson M, Strong A (1995) Applying MCSST to coral reef bleaching. Advances in Space Research 16: 151-154.
86. Aronson RB, Precht WF, Toscano MA, Koltes KH (2002) The 1998 bleaching event and its aftermath on a coral reef in Belize. Marine Biology xxx.

bioRxiv preprint doi: https://doi.org/10.1101/154179; this version posted October 23, 2017. The copyright holder for this preprint (which was not certified by peer review) is the author/funder, who has granted bioRxiv a license to display the preprint in perpetuity. It is made available under aCC-BY 4.0 International license.

87. Davies SW, Rahman M, Meyer E, Green EA, Buschiazzo E, Medina M, Matz MV (2013) Novel polymorphic microsatellite markers for population genetics of the endangered Caribbean star coral, Montastraea faveolata. Marine Biodiversity 43: 167-172.
88. Chomczynski P, Sacchi N (2006) The single-step method of RNA isolation by acid guanidinium thiocyanate–phenol–chloroform extraction: twenty-something years on. Nature protocols 1: 581-585.
89. Stat M, Loh WKH, Hoegh-Guldberg O, Carter DA (2009) Stability of coral–endosymbiont associations during and after

a thermal stress event in the southern Great Barrier Reef. Coral Reefs 28: 709-713.
90. Klepac CN, Beal J, Kenkel CD, Sproles A, Polinski JM, Williams MA, Matz MV, Voss JD (2015) Seasonal stability of coral-Symbiodinium associations in the subtropical coral habitat of St. Lucie Reef, Florida. Marine Ecology Progress Series 532: 137-151.
91. Li W, Fu L, Niu B, Wu S, Wooley J (2012) Ultrafast clustering algorithms for metagenomic sequence analysis. Briefings in bioinformatics: bbs035.
92. Guindon S, Gascuel O (2003) A simple, fast, and accurate algorithm to estimate large phylogenies by maximum likelihood. Systematic Biology 52: 696-704.
93. Guindon S, Dufayard J-F, Lefort V, Anisimova M, Hordijk W, Gascuel O (2010) New algorithms and methods to estimate maximum-likelihood phylogenies: assessing the performance of PhyML 3.0. Systematic Biology 59: 307-321.
94. Kearse M, Moir R, Wilson A, Stones-Havas S, Cheung M, Sturrock S, Buxton S, Cooper A, Markowitz S, Duran C (2012) Geneious Basic: an integrated and extendable desktop software platform for the organization and analysis of sequence data. Bioinformatics 28: 1647-1649.
95. Darriba D, Taboada GL, Doallo R, Posada D (2012) jModelTest 2: more models, new heuristics and parallel computing. Nature methods 9: 772-772.
96. Dereeper A, Guignon V, Blanc G, Audic S, Buffet S, Chevenet F, Dufayard J-F, Guindon S, Lefort V, Lescot M (2008) Phylogeny. fr: robust phylogenetic analysis for the non-specialist. Nucleic acids research 36: W465-W469.
97. Dereeper A, Audic S, Claverie J-M, Blanc G (2010) BLAST-EXPLORER helps you building datasets for phylogenetic analysis. BMC evolutionary biology 10: 8.
98. Chevenet F, Brun C, Bañuls A-L, Jacq B, Christen R (2006) TreeDyn: towards dynamic graphics and annotations for analyses of trees. BMC bioinformatics 7: 439.
99. Team RC (2017) R: A language and environment for statistical computing. R Foundation for Statistical Computing Vienna, Austria.
100. Thornhill DJ, LaJeunesse TC, Santos SR (2007) Measuring rDNA diversity in eukaryotic microbial systems: how intragenomic variation, pseudogenes, and PCR artifacts confound biodiversity estimates. Molecular Ecology 16: 5326-5340.
101. Matz MV, Wright RM, Scott JG (2013) No control genes required: Bayesian analysis of qRT-PCR data. Plos ONE 8: e71448.
102. Oksanen J, Blanchet FG, Kindt R, Legendre P, Minchin PR, O'Hara R, Simpson GL, Solymos P, Stevens M, Wagner H (2013) Package 'vegan'. R Packag ver 254: 20-28.
103. Finney JC, Pettay, D.T., Sampayo, E.M., Warner, M.E., Oxenford, H.A. and T.C. LaJeunesse (2010) On the relative significance of host-habitat, irradiance, and dispersal in the ecological distribution and speciation of coral endosymbionts. Microbial Ecology In Press.
104. LaJeunesse TC, Loh WK, Van Woesik R, Hoegh-Guldberg O, Schmidt GW, Fitt WK (2003) Low symbiont diversity in southern Great Barrier Reef corals, relative to those of the Caribbean. Limnology and Oceanography 48: 2046-2054.

bioRxiv preprint doi: https://doi.org/10.1101/154179; this version posted October 23, 2017. The copyright holder for this preprint (which was not certified by peer review) is the author/funder, who has granted bioRxiv a license to display the preprint in perpetuity. It is made available under aCC-BY 4.0 International license.

105. Thornhill DJ, LaJeunesse TC, Kemp DW, Fitt WK, Schmidt GW (2006) Multi-year, seasonal genotypic surveys of coral-algal symbioses reveal prevalent stability or post-bleaching reversion Marine Biology 148: 711-722.
106. Thornhill DJ, Xiang Y, Fitt WK, Santos SR (2009) Reef endemism, host specificity and temporal stability in populations of symbiotic dinoflagellates from two ecologically dominant Caribbean corals. Plos ONE 4: e6262.
107. Van Oppen M, Mieog J, Sanchez C, Fabricius K (2005) Diversity of algal endosymbionts (zooxanthellae) in octocorals: the roles of geography and host relationships. Molecular Ecology 14: 2403-2417.
108. Pochon X, Pawlowski J, Zaninetti L, Rowan R (2001) High genetic diversity and relative specificity among Symbiodinium-like endosymbiotic dinoflagellates in soritid foraminiferans. Marine Biology 139: 1069-1078.
109. Stat M, Yost DM, Gates RD (2015) Geographic structure and host specificity shape the community composition of symbiotic dinoflagellates in corals from the Northwestern Hawaiian Islands. Coral Reefs 34: 1075-1086.
110. LaJeunesse TC, Lee S, Bush S, Bruno JF (2005) Persistence of non-Caribbean algal symbionts in Indo-Pacific mushroom corals released to Jamaica 35 years ago. Coral Reefs 24: 157-159.
111. Santos S, Shearer T, Hannes A, Coffroth M (2004) Fine-scale diversity and specificity in the most prevalent lineage of symbiotic dinoflagellates (Symbiodinium, Dinophyceae) of the Caribbean. Molecular Ecology 13: 459-469.
112. Bongaerts P, Riginos C, Ridgway T, Sampayo EM, van Oppen MJ, Englebert N, Vermeulen F, Hoegh-Guldberg O (2010) Genetic divergence across habitats in the widespread coral Seriatopora hystrix and its associated Symbiodinium. Plos ONE 5: e10871.
113. Tong H, Cai L, Zhou G, Yuan T, Zhang W, Tian R, Huang H, Qian P-Y (2017) Temperature shapes coral-algal symbiosis in the South China Sea. Scientific reports 7: 40118. doi: 10.1038/srep40118 http://www.nature.com/articles/srep40118#supplementary-information
114. Buddemeier RW, Fautin DG (1993) Coral bleaching as an adaptive mechanism. BioScience 43: 320-326.
115. Glynn PW, Mate JL, Baker AC, Calderon MO (2001) Coral bleaching and mortality in Panama and Ecuador during the 1997-1998 El Nino Southern Oscillation event: spatial/temporal patterns and comparisons with the 1982-1983 event. Bulletin of Marine Science 69: 79-109.
116. Frade P, Englebert N, Faria J, Visser P, Bak R (2008) Distribution and photobiology of Symbiodinium types in different light environments for three colour morphs of the coral Madracis pharensis: is there more to it than total irradiance? Coral Reefs 27: 913-925.
117. Ulstrup KE, Ralph PJ, Larkum AWD, Kuhl M (2006) Intra-colonial variability in light acclimation of zooxanthellae in coral tissues of Pocillopora damicornis. Marine Biology 149: 1325 - 1335.
118. Ulstrup KE, Van Oppen M (2003) Geographic and habitat partitioning of genetically distinct zooxanthellae (Symbiodinium) in Acropora corals on the Great Barrier Reef. Molecular Ecology 12: 3477-3484.
119. Toller WW, Rowan R, Knowlton N (2001) Repopulation of zooxanthellae in the Caribbean corals *Montastraea annularis* and *M. faveolata* following experimental and disease-associated bleaching. Biological Bulletin 201: 360-373.
120. Hennige SJ, Smith DJ, Walsh S-J, McGinley MP, Warner ME, Suggett DJ (2010) Acclimation and adaptation of scleractinian coral communities along environmental gradients within an Indonesian reef system. Journal of Experimental Marine Biology and Ecology 391: 143-152. doi: http://dx.doi.org/10.1016/j.jembe.2010.06.019

bioRxiv preprint doi: https://doi.org/10.1101/154179; this version posted October 23, 2017. The copyright holder for this preprint (which was not certified by peer review) is the author/funder, who has granted bioRxiv a license to display the preprint in perpetuity. It is made available under aCC-BY 4.0 International license.

121. Abrego D, Van Oppen MJ, Willis BL (2009) Highly infectious symbiont dominates initial uptake in coral juveniles. Molecular Ecology 18: 3518-3531.
122. Fabricius K, Mieog J, Colin P, Idip D, H VAN OPPEN M (2004) Identity and diversity of coral endosymbionts (zooxanthellae) from three Palauan reefs with contrasting bleaching, temperature and shading histories. Molecular Ecology 13: 2445-2458.
123. LaJeunesse TC, Pettay DT, Sampayo EM, Phongsuwan N, Brown B, Obura DO, Hoegh-Guldberg O, Fitt WK (2010) Long-standing environmental conditions, geographic isolation and host–symbiont specificity influence the relative ecological dominance and genetic diversification of coral endosymbionts in the genus Symbiodinium. Journal of Biogeography 37: 785-800.
124. Baker AC (2001) Reef corals bleach to survive change. Nature 411: 765-766.
125. LaJeunesse TC, Wham DC, Pettay DT, Parkinson JE, Keshavmurthy S, Chen CA (2014) Ecologically differentiated stress-tolerant endosymbionts in the dinoflagellate genus Symbiodinium (Dinophyceae) Clade D are different species. Phycologia 53: 305-319.
126. Carilli JE, Norris RD, Black BA, Walsh SM, McField M (2009) Local stressors reduce coral resilience to bleaching. Plos ONE 4: e6324.
127. Paris CB, Cherubin LM (2008) River-reef connectivity in the Meso-American Region. Coral Reefs 27: 773-781.
128. Carilli JE, Prouty NG, Hughen KA, Norris RD (2009) Century-scale records of land-based activities recorded in Mesoamerican coral cores. Marine Pollution Bulletin 58: 1835-1842.
129. Howells EJ, Berkelmans R, van Oppen MJ, Willis BL, Bay LK (2013) Historical thermal regimes define limits to coral acclimatization. Ecology 94: 1078-1088.
130. Howells E, Beltran V, Larsen N, Bay L, Willis B, Van Oppen M (2012) Coral thermal tolerance shaped by local adaptation of photosymbionts. Nature Climate Change 2: 116-120.
131. Hume BC, Voolstra CR, Arif C, D'Angelo C, Burt JA, Eyal G, Loya Y, Wiedenmann J (2016) Ancestral genetic diversity associated with the rapid spread of stress-tolerant coral symbionts in response to Holocene climate change. Proceedings of the National Academy of Sciences 113: 4416-4421.

bioRxiv preprint doi: https://doi.org/10.1101/154179; this version posted October 23, 2017. The copyright holder for this preprint (which was not certified by peer review) is the author/funder, who has granted bioRxiv a license to display the preprint in perpetuity. It is made available under aCC-BY 4.0 International license.

Tables and Figures

Table 1: Sampling locations and sample size for *S. siderea* (SSID), *S. radians* (SRAD), and *P. strigosa* (PSTR). Locations are listed in order of descending latitude (Northernmost to Southernmost). '-' represent an instance where sample size is equal to zero (n=0).

Transect	Thermal regime	Collection Date	Illumina Lane	Lat (°N)	Long (°W)	SSID	SRAD	PSTR
Belize City	Low	Nov 2014	2	17.64363	88.0264	n=10	---	---
Belize City	High	Oct 2015	2	17.48685	88.1207	n=10	---	---
Dangriga	Low	Nov 2014	2	17.078	88.01285	n=9	---	---
Dangriga	High	Nov 2014	2	16.79491	88.27699	n=10	---	---
Placencia	Low	Nov 2014	1	16.45816	88.01295	n=7	n=7	n=5
Placencia	Mod	Nov 2014	1	16.49995	88.16527	n=6	n=7	n=6
Placencia	High	Nov 2014	1	16.4654	88.31315	n=9	n=9	n=5
Sapodilla	Low	Nov 2014	1	16.15729	88.25073	n=8	---	---
Sapodilla	Mod	Nov 2014	1	16.13013	88.33234	n=6	---	n=6
Sapodilla	High	Nov 2014	1	16.2245	88.62943	n=8	n=6	---

Table 2: Average number of raw reads, trimmed reads, and mapped reads including mapping efficiency (% of trimmed reads that mapped) for each species.

Species	Raw reads	Trimmed reads	Mapped reads	Mapping efficiency
S. siderea	46161	28453	22048	73%
S. radians	51081	46812	35290	75%
P. strigosa	88888	43928	31873	69%
Total	186130	118834	89211	75%

Figure Legends

Fig 1: Thermal regime designations for sampling sites on the Belize MBRS [83]. Stars indicate sites where coral tissue samples were collected for *Symbiodinium* community analysis. Low_{TP}, mod_{TP}, and $high_{TP}$ are defined based on combined averages of annual maximum temperature, annual temperature

bioRxiv preprint doi: https://doi.org/10.1101/154179; this version posted October 23, 2017. The copyright holder for this preprint (which was not certified by peer review) is the author/funder, who has granted bioRxiv a license to display the preprint in perpetuity. It is made available under aCC-BY 4.0 International license.

range, annual days above the bleaching threshold, and annual longest streak of consecutive days above the bleaching threshold. Low_{TP} sites exhibit the lowest values for all parameters measured and $high_{TP}$ sites exhibit the highest. A more detailed description of classification of these thermal regimes can be found in Baumann et al. [83].

Fig 2: Phylogenetic analysis of ITS-2 sequences of representative OTUs from this study in addition to reference sequences for each clade (indicated by *). Branch support values are shown on the branches at divisions between distinct clades. The scale bar represents replacements per nucleotide site.

Fig 3. Relative abundance (%) of each OTU (lineage) in *S. siderea* (A), *S. radians* (B), and *P. strigosa* (C). Each column represents an individual sample. Columns are arranged by latitudinal transect (as indicated by site names in alternating gray and white boxes) and then by thermal regime (blue boxes indicate low_{TP} sites, green boxes indicate mod_{TP} sites, and red boxes indicates $high_{TP}$ sites.

Fig 4. Principal component analysis (PCA) plots of *Symbiodinium* communities by species (A) and by thermal regime for *S. siderea* (B). Percentages on each axis indicate the amount of variation explained by each axis. Adonis *p-values* indicate significant results of PERMANOVA tests. See Table S4 for additional PERMANOVA results. Black arrows indicate loadings showing the magnitude and direction of the effect of each OTU on the total variance. Colored ellipses indicate 95% confidence intervals.

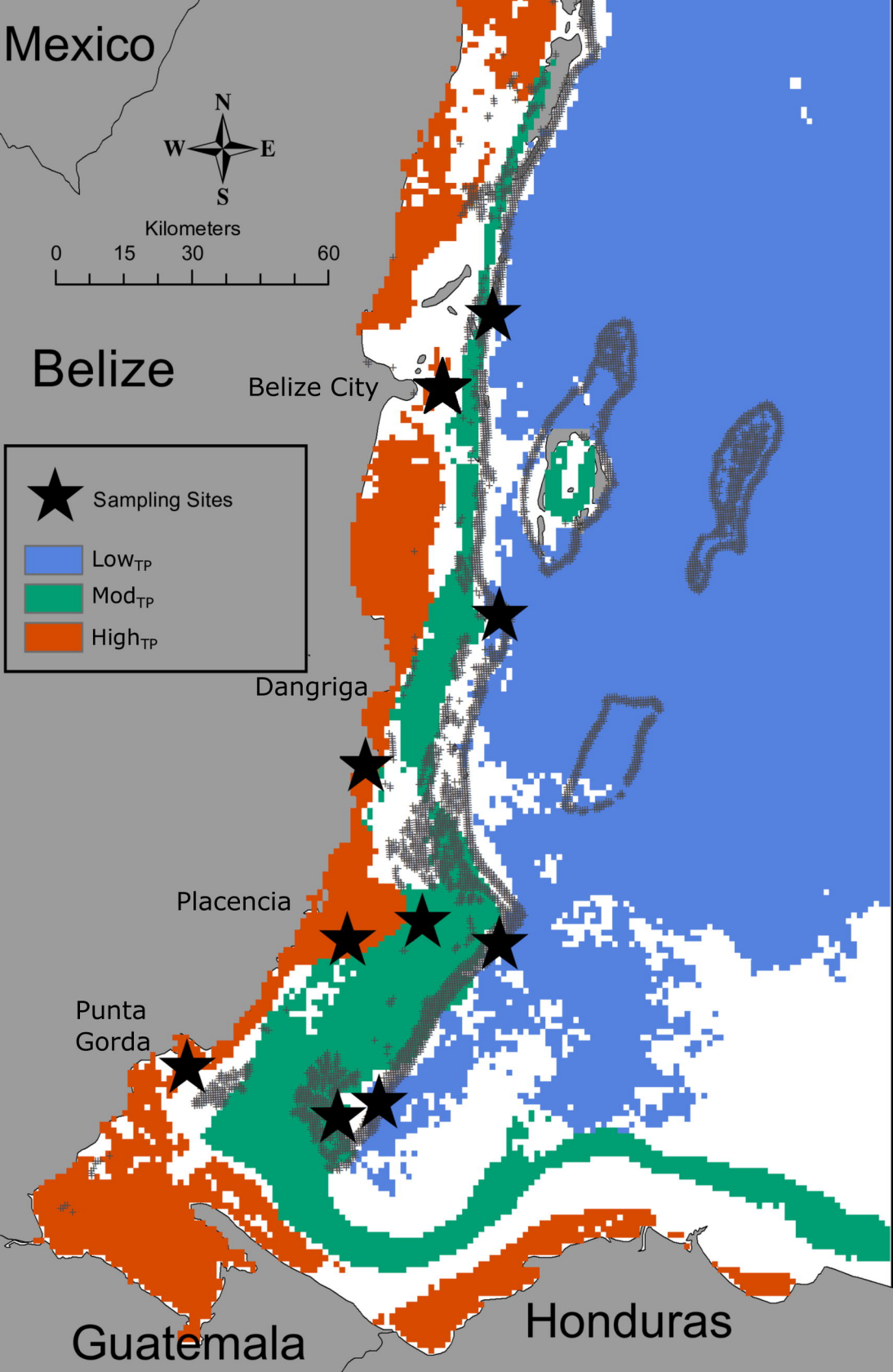
Mexico
N
W
E
S
Kilometers
0
15
30
60
Belize
Belize City
Sampling Sites
Low$_{TP}$
Mod$_{TP}$
High$_{TP}$
Dangriga
Placencia
Punta
Gorda
Guatemala
Honduras

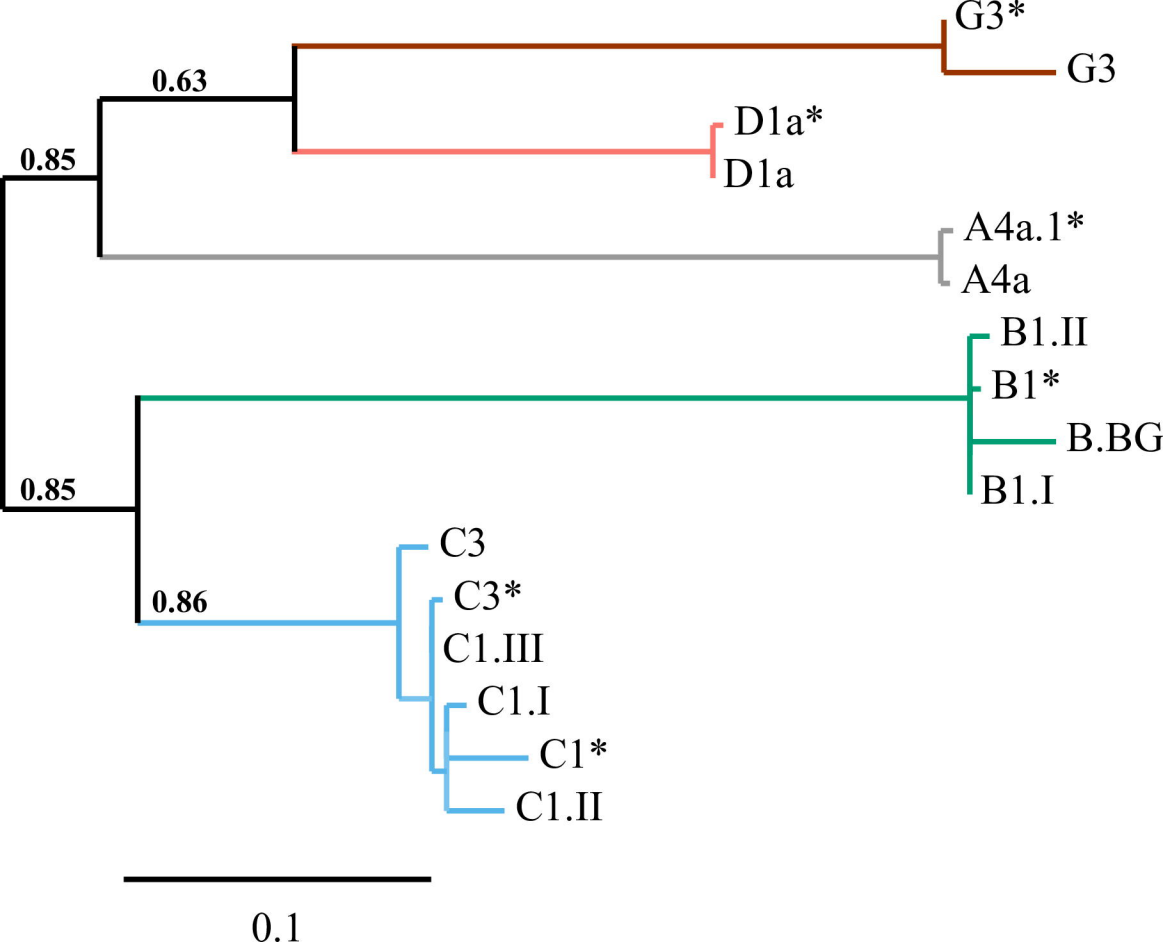
G3*
G3
0.63
D1a*
D1a
0.85
A4a.1*
A4a
B1.II
B1*
B.BG
B1.I
0.85
C3
0.86
C3*
C1.III
C1.I
C1*
C1.II
0.1

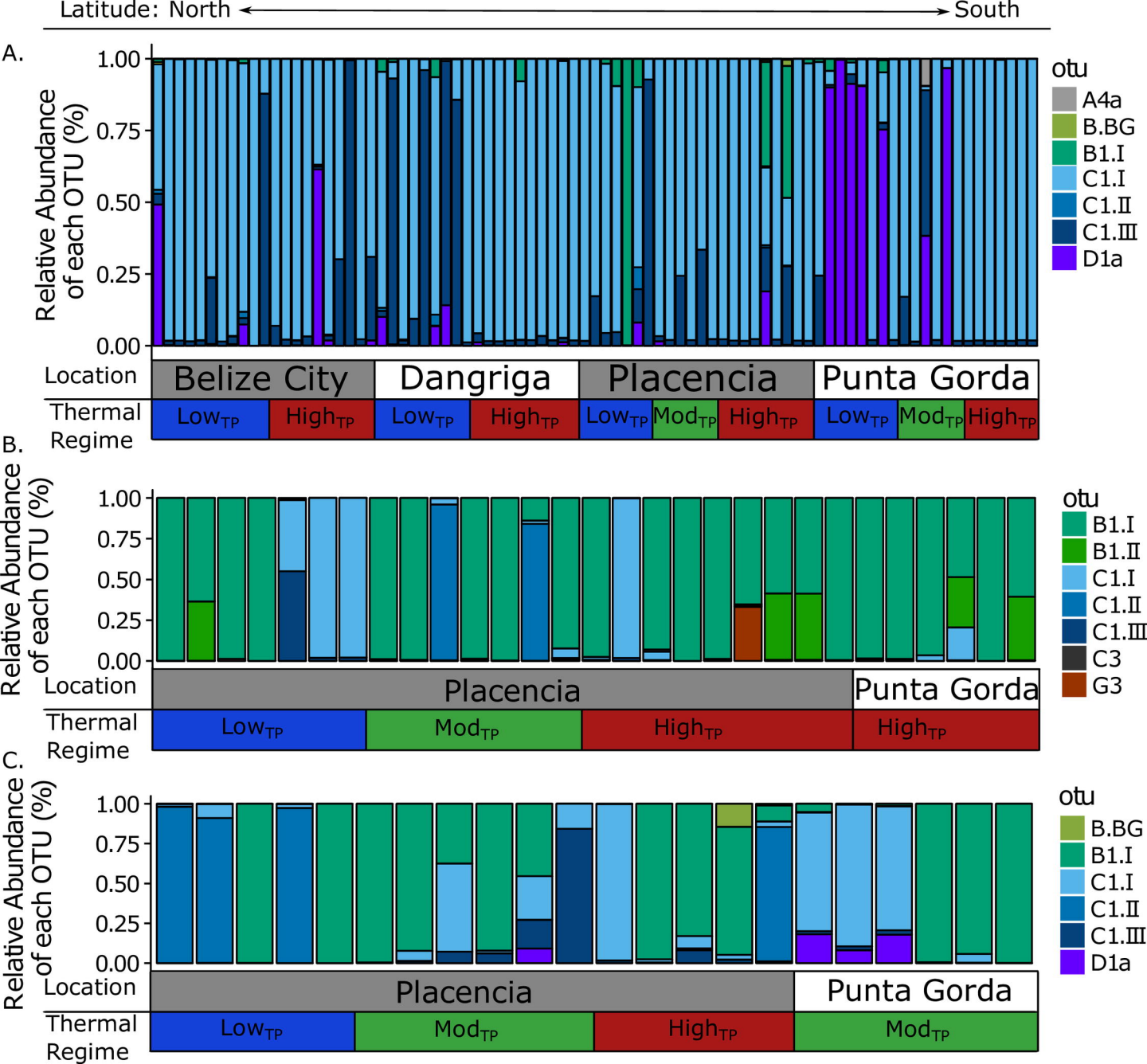
Latitude: North
South
A.
Relative Abundance of each OTU (%)
1.00
0.75
0.50
0.25
0.00
otu
A4a
B.BG
B1.I
C1.I
C1.II
C1.III
D1a
Location
Belize City
Dangriga
Placencia
Punta Gorda
Thermal Regime
Low$_{TP}$
High$_{TP}$
Low$_{TP}$
High$_{TP}$
Low$_{TP}$
Mod$_{TP}$
High$_{TP}$
Low$_{TP}$
Mod$_{TP}$
High$_{TP}$
B.
Relative Abundance of each OTU (%)
1.00
0.75
0.50
0.25
0.00
otu
B1.I
B1.II
C1.I
C1.II
C1.III
C3
G3
Location
Placencia
Punta Gorda
Thermal Regime
Low$_{TP}$
Mod$_{TP}$
High$_{TP}$
High$_{TP}$
C.
Relative Abundance of each OTU (%)
1.00
0.75
0.50
0.25
0.00
otu
B.BG
B1.I
C1.I
C1.II
C1.III
D1a
Location
Placencia
Punta Gorda
Thermal Regime
Low$_{TP}$
Mod$_{TP}$
High$_{TP}$
Mod$_{TP}$

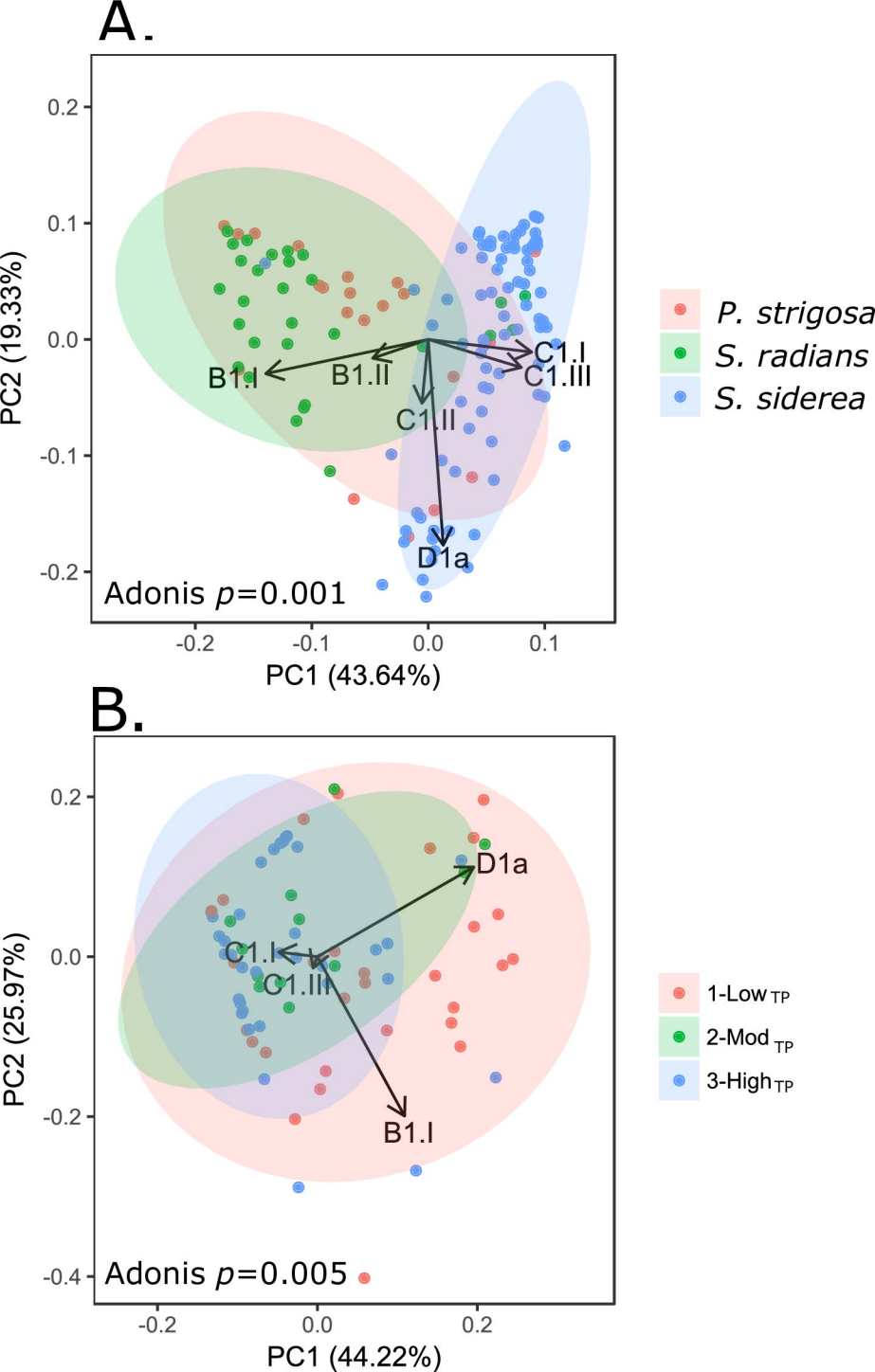
A.
0.2
0.1
0.0
-0.1
-0.2
PC2 (19.33%)
B1.I
B1.II
C1.I
C1.III
C1.II
D1a
Adonis p=0.001
-0.2
-0.1
0.0
0.1
PC1 (43.64%)
P. strigosa
S. radians
S. siderea
B.
0.2
0.0
-0.2
-0.4
PC2 (25.97%)
D1a
C1.I
C1.III
B1.I
Adonis p=0.005
-0.2
0.0
0.2
PC1 (44.22%)
1-Low TP
2-Mod TP
3-High TP