Integrating multiple genomic technologies to investigate an outbreak of carbapenemase-producing *Enterobacter hormaechei*

Leah W. Roberts[1,2,3], Patrick N. A. Harris[4,5], Brian M. Forde[1,2,3], Nouri L. Ben Zakour[1,2,3], Mitchell Stanton-Cook[1,2], Elizabeth Catchpoole[5], Minh-Duy Phan[1,2], Hanna E. Sidjabat[4], Haakon Bergh[5], Claire Heney[5], Jayde A. Gawthorne[1,2], Jeffrey Lipman[4,6], Anthony Allworth[7], Kok-Gan Chan[8,9], Teik Min Chong[8], Wai-Fong Yin[8], Mark A. Schembri[1,2], David L. Paterson[2,4,10], Scott A. Beatson[1,2,3]

1. School of Chemistry and Molecular Biosciences, The University of Queensland, Brisbane, QLD, Australia
2. Australian Infectious Diseases Research Centre, The University of Queensland, Brisbane, QLD, Australia
3. Australian Centre for Ecogenomics, The University of Queensland, Brisbane, QLD, Australia
4. The University of Queensland, UQ Centre for Clinical Research, Brisbane, QLD, Australia
5. Pathology Queensland, Central Microbiology, Brisbane, QLD, Australia
6. Burns Trauma and Critical Care Research Centre, The University of Queensland, Brisbane, QLD, Australia
7. Infectious Disease Unit, Royal Brisbane & Women's Hospital, Brisbane, QLD, Australia
8. Division of Genetics and Molecular Biology, Institute of Biological Sciences, Faculty of Science, University of Malaya, Kuala Lumpur, Malaysia
9. International Genome Centre, Jiangsu University, Zhenjiang, China.
10. Wesley Medical Research, The Wesley Hospital, Auchenflower, QLD, Australia

Key words: *bla*$_{IMP-4}$; carbapenem resistant, whole genome sequencing; plasmid; carbapenemase-producing Enterobacteriaceae (CPE)

Corresponding author:

Associate Professor Scott A. Beatson, School of Chemistry and Molecular Biosciences, The University of Queensland, Brisbane 4072, QLD, Australia

Telephone +61-7-33654863

Email s.beatson@uq.edu.au

Alternative corresponding author:

Dr Patrick N. A. Harris, UQ Centre for Clinical Research, The University of Queensland, Brisbane, QLD, Australia

Telephone +61 7 3346 5555

Email p.harris@uq.edu.au

Abstract

Carbapenem-resistant Enterobacteriaceae (CRE) represent one of the most urgent threats to human health posed by antibiotic resistant bacteria. *Enterobacter hormaechei* and other members of the *Enterobacter cloacae* complex are the most commonly encountered *Enterobacter* spp. within clinical settings, responsible for numerous outbreaks and ultimately poorer patient outcomes. Here we applied three complementary whole genome sequencing (WGS) technologies to characterise a hospital cluster of $bla_{\text{IMP-4}}$ carbapenemase-producing *E. hormaechei.*

In response to a suspected CRE outbreak in 2015 within an Intensive Care Unit (ICU)/Burns Unit in a Brisbane tertiary referral hospital we used Illumina sequencing to determine that all outbreak isolates were sequence type (ST)90 and near-identical at the core genome level. Comparison to publicly available data unequivocally linked all 10 isolates to a 2013 isolate from the same ward, confirming the hospital environment as the most likely original source of infection in the 2015 cases. No clonal relationship was found to IMP-4-producing isolates identified from other local hospitals. However, using Pacific Biosciences long-read sequencing we were able to resolve the complete context of the $bla_{\text{IMP-4}}$ gene, which was found to be on a large IncHI2 plasmid carried by all IMP-4-producing isolates. Continued surveillance of the hospital environment was carried out using Oxford Nanopore long-read sequencing, which was able to rapidly resolve the true relationship of subsequent isolates to the initial outbreak. Shotgun metagenomic sequencing of environmental samples also found evidence of ST90 *E. hormaechei* and the IncHI2 plasmid within the hospital plumbing.

Overall, our strategic application of three WGS technologies provided an in-depth analysis of the outbreak, including the transmission dynamics of a carbapenemase-producing *E. hormaechei* cluster, identification of possible hospital reservoirs and the full context of $bla_{\text{IMP-4}}$ on a multidrug resistant IncHI2 plasmid that appears to be widely distributed in Australia.

65 **Introduction**:

66 Carbapenem antibiotics have become the mainstay of therapy for serious infections caused by
67 multidrug resistant (MDR) Gram-negative bacteria, especially for strains expressing extended-
68 spectrum β-lactamase (ESBL) or AmpC-type enzymes[1]. Increased use has driven resistance to
69 carbapenems and the emergence of carbapenemase-producing Enterobacteriaceae (CPE) and
70 carbapenem-resistant Enterobacteriaceae (CRE), which include common enteric species such as
71 *Escherichia coli*, *Klebsiella pneumoniae* and *Enterobacter* spp.[2].

72

73 Before 2005, an estimated 99.9% of Enterobacteriaceae were susceptible to carbapenems[3].
74 However, the isolation of CRE has since increased dramatically and these organisms are now
75 reported in all WHO health regions[4]. The mortality rates for CRE infections are reported to be as
76 high as 48%[5], and resistance to last-line antibiotics used in lieu of carbapenems, such as colistin,
77 has also emerged[6].

78

79 Resistance to carbapenems in Enterobacteriaceae occurs via a range of mechanisms. Of greatest
80 concern is the acquisition of genes encoding carbapenemases[7]. This most frequently occurs via
81 transfer of mobile genetic elements (MGE), such as plasmids, occasionally carrying multiple β-
82 lactamases co-located with other resistance determinants, rendering these strains MDR or
83 extensively drug-resistant (XDR)[8]. Australia has experienced low rates of CRE [9], although sporadic
84 introduction of *K. pneumoniae* carbapenemase (KPC)[10] and New Delhi metallo-β-lactamase (NDM)
85 [11] has been reported, including significant nosocomial outbreaks[12]. The most frequently encountered
86 carbapenemase in Australia is $bla_{\text{IMP-4}}$, particularly in *Enterobacter* spp.[13]. IMP-producing
87 *Enterobacter* spp. have caused occasional outbreaks within intensive care or burns units in
88 Australian hospitals[14-16].

89

90 Here, we describe the use of whole genome sequencing (WGS) to investigate an outbreak of IMP-
91 4-producing *Enterobacter hormaechei* within an Intensive Care Unit (ICU) and Burns facility.
92
93 **Clinical case report**
94 Two patients in mid 2015 were transferred from regional Queensland hospitals to the ICU with burn
95 injuries sustained from the same accident (Figure 1). *E. cloacae* complex was cultured from the
96 endotracheal tube (ETT) of patients 1 and 2 on day 6 and 8 of admission, respectively. Both *E.*
97 *cloacae* complex isolates were confirmed as MDR by phenotypic testing used in the diagnostic
98 setting (Table 1). Real-time PCR amplification of $bla_{\text{IMP-4}}$ confirmed their status as carbapenemase-
99 producers. Both of these patients were previously well, with no prior hospital admission or contact
100 with healthcare facilities. Neither had been resident or hospitalized overseas for more than 20 years.
101
102 Patient 1 underwent debridement and split skin grafting for 29% total body surface area burns on
103 day 2 of ICU admission and subsequently had 3 procedures in the burns operating rooms (Figure 1).
104 An additional MDR-*E. cloacae* complex isolate was isolated from urine on day 21, eight days after
105 discharge from the ICU. After no further colonisation of MDR-*E. cloacae* complex, Patient 1 was
106 discharged from the hospital on day 38.
107
108 Patient 2 underwent multiple grafting and debridement procedures and was discharged from the
109 ICU on day 17 (Figure 1). MDR-*E. cloacae* complex colonisation from the ETT and from urine was
110 noted on day 8 and day 15, respectively. By day 19, the patient developed clinical signs of sepsis,
111 with a phenotypically identical isolate identified in blood cultures and from a central venous line
112 (CVL) tip culture. She received piperacillin/tazobactam 4.5 grams 8-hourly for 2 days, improved
113 following line removal and did not receive further antibiotics for this episode. A subsequent *E.*
114 *cloacae* complex was isolated from urine collected from a urinary catheter 17 days later
115 demonstrated a different antibiogram with susceptibility to third generation cephalosporins,

116 meropenem and gentamicin. She received 3 days of oral norfloxacin 400mg twice daily with
117 microbiological resolution.
118
119 Patient 3, a 39-year old woman, was admitted with 66% total body surface area burns to the same
120 ICU 5 weeks after Patient 1 and 2 were admitted and 20 days after they had been discharged from
121 the ICU (Figure 1). MDR-*E. cloacae* complex was cultured from the ETT of Patient 3 on day 12 of
122 ICU admission. She had frequent brief admissions to several hospitals since 2010 (never to ICU),
123 and no MDR Gram-negative bacilli were identified in clinical or screening samples during previous
124 admissions. MDR-*E. cloacae* complex with *Pseudomonas aeruginosa* were isolated from 8 skin
125 swabs and an additional ETT aspirate. On days 19 and day 21, MDR-*E. cloacae* complex was
126 isolated from blood cultures in the context of skin graft breakdown and signs of systemic
127 inflammatory response syndrome (SIRS) with increasing inotrope requirements (Figure 1).
128 *Streptococcus mitis* was cultured from blood on day 19. On day 36, her condition worsened with
129 signs of SIRS. Transesophageal echocardiography demonstrated aortic and mitral valve lesions
130 consistent with endocarditis. Pancytopenia developed, with a bone marrow aspirate and trephine
131 suggestive of peripheral consumption. Multiple suspected cerebral, pulmonary, splenic and renal
132 septic emboli were identified on imaging. She was palliated on day 47 of admission due to
133 extensive cerebral emboli (Figure 1).
134
135 **Materials & Methods**
136 **Study setting**
137 Primary isolates were obtained from patients admitted to the Royal Brisbane & Women's Hospital
138 (RBWH), a tertiary referral hospital with 929 beds in South-East Queensland, Australia. Additional
139 IMP-producing isolates, cultured from patients admitted to other hospitals in the metropolitan
140 Brisbane area (referred to as Hospital A and B), were obtained from Pathology Queensland -
141 Central Microbiology for comparison (Table S4).

142

143 **Antimicrobial susceptibility testing and carbapenemase detection**

144 All bacterial isolates were identified by matrix-assisted laser desorption/ionization mass
145 spectrometry (MALDI-TOF) (Vitek MS; bioMérieux, France). Antimicrobial susceptibility testing
146 was carried out using Vitek 2 automated AST-N426 card (bioMérieux) with Etest to determine
147 MICs for meropenem, imipenem and ertapenem. Carbapenemase activity was assessed by the use
148 of the Carba-NP test (RAPIDEC; bioMérieux) and the presence of the $bla_{\text{IMP-4-like}}$ carbapenemase
149 gene confirmed using an in-house multiplex real-time PCR (also targeting NDM, KPC, VIM and
150 OXA-48-like carbapenemases)[17].

151

152 **Bacterial DNA extraction**

153 Single colonies were selected from primary bacterial cultures and grown in 10 mL Luria Bertani
154 (LB) broth at 37°C overnight (shaking 250 rpm). DNA was extracted using the UltraClean®
155 Microbial DNA Isolation Kit (MO BIO Laboratories) as per manufacturer instructions.

156

157 **Genome sequencing, Quality Control and *de novo* Assembly**

158 All isolates in this study were sequenced using Illumina (see supplementary appendix). Reads
159 passing quality control (QC) were assembled using Spades v3.6.0[18] under default parameters
160 (without careful flag). Contigs with coverage less than 10x were removed from final assemblies.
161 Final assembly metrics were checked using QUAST v2.3[19] (Table S3). A single isolate (MS14449)
162 was sequenced using Nanopore MinION sequencing (see supplementary appendix).

163

164 **Taxonomic identification**

165 Illumina raw reads were analysed using Kraken v0.10.5-beta to determine species and possible
166 contamination. With the exception of MS7925, which was found to be *E. coli*, initial analysis
167 determined the isolates to be *E. cloacae*. Subsequent analysis of the *E. cloacae de novo* assemblies

168 using MASH v2.0[20] and FastANI v1.1[21] against representative *E. cloacae* complex complete
169 genomes (see supplementary material) determined all isolates to be *E. hormaechei*.
170
171 **Phylogenetic analysis**
172 SHRiMP v2.2.3[22] as implemented in Nesoni v0.130[23] under default settings was used to determine
173 core single nucleotide polymorphisms (SNPs) between the ten 2015 RBWH *E. hormaechei* genomes
174 to the reference Ecl1 and create a minimal-spanning tree. Further details of the Ecl1 assembly and
175 SNP-calling process are provided in the supplementary appendix. Maximum likelihood trees of Ecl1
176 and the 6 *E. cloacae* from Hospitals A and B were built using RAxML v8.1.15[24] based on the Nesoni
177 core SNPs. RAxML was run with the GTRGAMMA nucleotide substitution rate and an initial seed
178 length of 456 (bootstrap 1000 with Lewis ascertainment correction). Core genome size was estimated
179 using Parsnp v1.2[25].
180
181 **Multi-locus Sequence Typing (MLST), Plasmid Typing and Antimicrobial Resistance (AMR)**
182 **Gene Profiling**
183 MLST of isolate raw reads was performed using srst2 v0.1.5[26] with typing schemes available on
184 PubMLST (http://pubmlst.org/). Plasmid replicon typing was done based on Compain *et al.*[27].
185 Antibiotic resistance genes were detected using the ResFinder database[28] and the ARG-ANNOT
186 database[29] with BLASTn and srst2[26] respectively. Manual confirmation was carried out using
187 BLASTn and read mapping using Burrows-Wheeler Aligner (BWA v0.7.5a-r405)[30]. Further details
188 of whole genome comparisons and phage analysis are given in the supplementary appendix.
189
190 **Pacific Biosciences (PacBio) Single Molecule Real-Time (SMRT) Sequencing**
191 A representative *E. hormaechei* isolate from patient 1 (MS7884) was grown on LB agar at 37°C
192 overnight. IMP positive colonies (determined by colony PCR) were grown overnight in 15 mL LB
193 broth with 2 µg/mL meropenem to avoid plasmid loss. Genomic DNA was extracted using

194 UltraClean® Microbial DNA Isolation Kit (MO BIO) as per manufacturer's instructions. 18.7 µg of
195 DNA was prepared for sequencing using an 8-12 kb insert library and sequenced on a PacBio RSII
196 sequencer using 1 SMRT cell. Further details of the assembly, annotation methods and plasmid
197 stability in MS7884 are given in the supplementary appendix.
198
199 **Metagenomic sequencing and analysis of environmental samples**
200 Swab and water samples from the ICU and Burns Ward were collected July 2018. DNA was
201 extracted directly from samples using the Qiagen DNeasy Powersoil extraction kit including
202 Biospec Products 0.1 mm diameter glass beads (as per manufacturers instructions). Water samples
203 were concentrated using a Whatman Nuclepore 0.2 µm polycarbonate 25 mm diameter filter prior
204 to DNA extraction. Sample DNA was sequenced at the Australian Centre for Ecogenomics on an
205 Illumina NextSeq 500 (see supplementary appendix).
206 All samples were screened for species using Kraken v1.0[31]. Samples were also screen for resistance
207 genes using srst2 v0.2.0[26] against the ARG-ANNOT database. MinHash sketches of the ST90 *E.*
208 *hormaechei* chromosome MS7884 (GenBank: CP022532.1) and the associated IncHI2 plasmid
209 pMS7884A (GenBank: CP022533.1) were generated using MASH v1.1.1[20] at default settings.
210 Illumina reads for each sample were screened against our reference sketches using the screen
211 function in MASH. Samples that shared >=90% of hashes were mapped to the reference sequences.
212 Mapped reads were then parsed using a custom script and *de novo* assembled using Spades v3.11.1
213 for MLST analysis using Abricate v0.8 (https://github.com/tseemann/abricate) and nucleotide
214 comparison using ACT[32] and BRIG[33].
215
216 **<u>Accession numbers</u>**
217 Genome data has been deposited under Bioproject PRJNA383436. Illumina raw
218 reads (SRX2999336-SRX2999345, SRX5578807-SRX5578812, SRX5578814), Nanopore raw
219 reads (SRX5578813), PacBio raw reads (SRX2999346-SRX2999347) and metagenomic reads

220 (SRX5590605-SRX5590610) have been deposited in the Sequence Read Archive (SRA). The
221 MS7884 chromosome (CP022532), pMS7884A plasmid (CP022533), and pMS7884B plasmid
222 (CP022534) have been deposited in GenBank.
223
224 **Results**
225 **All three patients carry carbapenemase-producing *E. cloacae* complex**
226 With the exception of MS7889 (isolated from the urine of Patient 2 on day 36), all *E. cloacae*
227 complex isolates collected from the outbreak were resistant to ceftriaxone, ceftazidime, ticarcillin-
228 clavulanate, piperacillin-tazobactam, meropenem, gentamicin and trimethoprim-sulphamethoxazole
229 by Vitek 2 testing (Table 1) and demonstrated carbapenemase production by Carba-NP. The MICs
230 for meropenem were considerably lower when tested by Etest[34], often falling below the clinically
231 susceptible breakpoint defined by EUCAST, but above the epidemiological cut-off (ECOFF)[35].
232 MS7889 was fully susceptible to carbapenems (meropenem MIC=0.032 by Etest) and was negative
233 for IMP-4-like genes by PCR (Table 1).
234
235 **Whole genome sequencing identifies a link to a previous IMP-producing isolate**
236 WGS of 10 isolates from patients 1, 2 and 3 was initiated after an additional microbiological
237 confirmation of a $bla_{\text{IMP-4}}$ *E. cloacae* complex isolate from a third patient from the RBWH ICU
238 (Figure 1). *In silico* analysis determined all to be sequence type (ST)90 *E. hormaechei* (part of the
239 *E. cloacae* complex), with the majority exhibiting the same resistance gene profile, including a
240 100% identical $bla_{\text{IMP-4}}$ gene (Table 1). The exception was the carbapenem susceptible isolate
241 MS7889, which was confirmed by WGS to have lost the $bla_{\text{IMP-4}}$ gene as well as several additional
242 resistance genes conserved in the other *E. hormaechei* isolates (Table 1). All ten isolates contained
243 an IncHI2 plasmid. Sequence analysis suggested that AmpC derepression was unlikely to contribute
244 to carbapenemase activity in these strains (further details are given in the supplementary appendix).
245

246 Comparison of the *E. hormaechei* genomes to publicly available draft assemblies identified a close
247 match to *E. hormaechei* Ecl1 (GenBank: JRFQ01000000; formerly *E. cloacae*), an ST90 strain
248 isolated from a burns patient at the RBWH ICU almost two years prior to the 2015 outbreak[13,36].
249 Antibiotic resistance profiling of the Ecl1 genome revealed an identical resistance profile compared
250 to the majority of the 2015 isolates (Table 1).
251
252 **The 2015 outbreak isolates were near identical at the core genome level to an isolate from**
253 **2013**
254 To investigate the relationship between the isolates at single-nucleotide resolution, reads from the
255 2015 RBWH isolates were mapped to *E. hormaechei* draft assembly for Ecl1. All 2015 RBWH
256 isolates differed by fewer than five core SNPs (4,934,357 bp core genome), consistent with a direct
257 ancestral relationship (Figure 2). Two isolates from Patient 1 and two isolates from Patient 3 were
258 indistinguishable at the core genome level (Figure 2), although all of the isolates from Patient 3 had
259 lost a prophage region (refer supplementary appendix). Ecl1 (isolated in 2013) was very closely
260 related to these isolates, differing by only one core SNP. All four isolates from Patient 2 contained a
261 discriminatory single-nucleotide deletion, thereby ruling out Patient 2 to Patient 3 transmission
262 (Figure 2).
263
264 **Integration of WGS with infection control response**
265 WGS analysis unequivocally linked all 10 isolates to the 2013 isolate Ecl1 from the same ward,
266 confirming that the clone had not been an incursion from the accident affecting Patient 1 and 2 and
267 that the hospital environment was suspected as the most likely original source of infection in the
268 2015 cases. In response, 28 environmental samples from the ICU, burns wards and operating
269 theatres were collected 65 days after patient 1 and 2 were admitted and inoculated onto MacConkey
270 agar with 8 mg/mL gentamicin (laboratory standard screening medium for MDR Gram-negative
271 bacilli). No carbapenemase-producing *Enterobacter* spp. were detected. Additionally, no

272 carbapenemase-producing *Enterobacter* spp. were detected in patients admitted to the ICU or burns
273 unit for a 6-month period following the outbreak.
274
275 **Sequencing of additional CPE isolates identify a circulating IMP-4-carrying plasmid in**
276 **Queensland**
277 To determine the broader context of IMP-producing Enterobacteriaceae in surrounding hospitals,
278 seven additional *bla*$_{\text{IMP-4}}$ producing Enterobacteriaceae (*E. cloacae* complex n=6, *E. coli* n=1) were
279 sequenced. These represented a selection of *bla*$_{\text{IMP-4}}$ producing Enterobacteriaceae identified from
280 Brisbane public hospitals via Pathology Queensland Central Microbiology for 2015. Both MLST
281 and SNP analysis found no relationship to the 2015 RBWH *E. hormaechei*, with approximately
282 50,000 SNP differences between the ST90 representative strain Ecl1 and its nearest non-ST90
283 phylogenetic neighbour (Figure 3, also see supplementary appendix). Despite not being clonally
284 related, all additional Enterobacteriaceae isolates possessed very similar antibiotic resistance gene
285 profiles (Table S4), suggesting the possibility of lateral gene transfer via mobile genetic elements
286 (e.g. integrons and/or plasmids). WGS analysis revealed that all 18 CPE isolates in this study,
287 including the *E. coli* isolate, harbored an IncHI2 plasmid (plasmid ST1) and an identical *bla*$_{\text{IMP-4}}$
288 gene, strongly suggesting plasmid-mediated circulation of *bla*$_{\text{IMP-4}}$ between Enterobacteriaceae in
289 Brisbane hospitals.
290
291 ***bla*$_{\text{IMP-4}}$ resides in the class 1 integron In809 on an IncHI2 plasmid**
292 Due to the presence of multiple repetitive elements surrounding *bla*$_{\text{IMP-4}}$, including insertion
293 sequences (IS) and two suspected integrons with similar gene content, we were unable to accurately
294 resolve the context of *bla*$_{\text{IMP-4}}$ using Illumina sequencing alone. One representative isolate
295 (MS7884) was sequenced twice using PacBio SMRT sequencing, which was able to resolve a
296 complete closed chromosome of 4,810,853 bp and two plasmids: pMS7884A, a 330,060 bp IncHI2
297 plasmid carrying *bla*$_{\text{IMP-4}}$ within a ~55 kb MDR region (Figure 4A), and pMS7884B, a smaller

298 untypeable plasmid of 126,208 bp. The pMS7884A MDR region harbours two different class 1
299 integrons (In37 and In809) as well as a composite transposon conferring resistance to tetracycline
300 and chloramphenicol (Figure 4A). BLASTn and read-mapping analysis revealed the presence of
301 identical plasmids in all but one of the 18 isolates sequenced by Illumina in this study: isolate
302 MS7889 is predicted to have lost a ~34 kb region from its MDR plasmid, including *bla*$_{\text{IMP-4}}$, due to
303 homologous recombination between two almost identical aminoglycoside resistance genes (Figure
304 4B). Notably in 15% of cases, sub-culture of MS7884 in the absence of meropenem selection
305 resulted in loss of *bla*$_{\text{IMP-4}}$ or the entire plasmid. Further details of the complete MS7884 genome
306 and plasmid analysis are presented in the supplementary appendix.
307
308 **Continued WGS surveillance reveals persistence of outbreak and transfer of *bla*$_{\text{IMP-4}}$ plasmid**
309 Ongoing surveillance has been in place for *bla*$_{\text{IMP-4}}$ positive *E. hormaechei* isolates within the
310 hospital since 2015. In 2016, during an unrelated outbreak, a *bla*$_{\text{IMP-4}}$ positive *E. hormaechei* was
311 isolated (MS14389) and following Illumina sequencing found to be only 2 SNPs different from the
312 2015 isolates, demonstrating continued persistence in the hospital environment (Figure S6).
313 In 2017, another *bla*$_{\text{IMP-4}}$ positive *E. hormaechei* (MS14449) was isolated from the Hematology
314 ward. Oxford Nanopore MinION sequencing has advanced in recent years to provide long-read
315 sequencing and real-time analysis of bacterial isolates. However, no method has been established
316 for its use in rapidly contextualising new isolates during ongoing outbreaks. Using the *de novo*
317 Nanopore assembly and contextualising it against publicly available *E. cloacae* complex strains
318 plus the outbreak isolates using whole genome alignment we were able to determine that this *E.*
319 *hormaechei* was clonally unrelated to the 2015 outbreak isolates, but did carry an identical IncHI2
320 plasmid (Figure S7-S9). A *bla*$_{\text{IMP-4}}$ positive *K. pneumoniae* isolate (MS14448) taken from the same
321 patient was also sequenced (using only Illumina short-read sequencing) and found to carry a near
322 identical IncHI2 plasmid, albeit missing a small section of the MDR region (Figure S10).
323

324 **Shotgun metagenomic sequencing reveals *E. hormaechei* ST90 and IncHI2 plasmid in hospital**
325 **environment**

326 Despite continued routine surveillance of the hospital environment using traditional culture methods
327 an environmental source for the ST90 *E. hormaechei* was not found. In July 2018, 50 swab and
328 water samples from the ICU and Burns ward environments were collected in response to an
329 unrelated outbreak and subjected to both shotgun metagenomic sequencing and traditional culturing
330 (Supplementary Dataset S2). From this round of surveillance, *Klebsiella oxytoca*, *E. cloacae*
331 complex and *Leclercia adecarboxylata* were detected via traditional culturing methods from four
332 samples (Table S7), however Illumina sequencing of these isolates determined that they were
333 unrelated to the outbreak. Despite being clonally unrelated, three samples were found to carry a
334 $bla_{\text{IMP-4}}$-like gene (based on Real-Time PCR), which upon further inspection of the sequencing data
335 corresponded to an IncHI2 plasmid with high similarity to pMS7884A (Supplementary Figure S11).
336 While traditional culturing was unable to detect the ST90 *E. hormaechei*, metagenomic sequencing
337 identified two samples with high confidence matches to the ST90 *E. hormaechei* reference MS7884
338 and the IncHI2 plasmid pMS7884A. Nucleotide comparison of the metagenomic assembled
339 genomes (MAGs) for these samples (R5514 and R5537, both taken from floor drains) to our *E.*
340 *hormachei* reference genome revealed a high level of nucleotide identity across the entirety of the
341 chromosome and plasmid (Supplementary Figures 12 and 13). MLST analysis of both MAGs was
342 also able to detect several similar, albeit incomplete, alleles for ST90 (Table S8). Additionally,
343 screening for resistance genes identified the $bla_{\text{IMP-4}}$ gene in both samples, further supporting the
344 presence of an ST90 *E. hormaechei* and an IncHI2 plasmid similar to pMS7884A in these samples.
345 Analysis of three other environmental samples (R5505, R5506 and R5522) recovered fewer than
346 5% of total reads that mapped to the reference *E. hormaechei* MS7884 genome, compared to 25%
347 and 20% for our positive samples R5514 and R5537 respectively (Table S8, Supplementary dataset
348 2). This low number of reads was insufficient to confidently identify the ST90 *E. hormaechei* or
349 IncHI2 plasmid of interest in these samples (Table S8 and Supplementary Figures 12 and 13).

350 **Discussion**

351 While there has been a dramatic improvement in the cost and availability of whole genome
352 sequencing (WGS), it is not clear how these advances can best be incorporated into routine clinical
353 microbiology. Several studies have demonstrated the ability of WGS to provide optimal
354 discrimination between strains to help inform a response to outbreaks or nosocomial acquisition[37-
355 40]. Here, we demonstrate that and integrated WGS approach can help rapidly characterize an
356 outbreak in a critical care setting, particularly regarding transmission pathways. We highlight how
357 WGS can be used to link contemporary outbreak isolates to historical isolates to inform infection
358 control and incorporate long-read sequencing technologies to resolve complete genomes (including
359 plasmids) and to rapidly resolve suspected outbreak cases. Finally, we demonstrate the potential of
360 using complete genome sequences to interrogate environmental shotgun metagenomic sequencing
361 data to identify outbreak sources.

362

363 The finding that the outbreak strains were virtually indistinguishable from an IMP-4-producing *E.*
364 *hormaechei* isolated two years previously from the same unit was unexpected and highlighted the
365 need to consider environmental sources and potential person-to-person transmission, as has been
366 previously described in Australian ICU and burns units[14]. Despite ongoing surveillance, traditional
367 culture-based detection methods were unable to find the ST90 *E. hormaechei* in the environment.
368 Direct DNA extraction and metagenomic sequencing has in recent years revolutionised infectious
369 disease surveillance, allowing detection of all microorganisms in a sample without the biases and
370 limitations of traditional pathogen detection[41]. Using metagenomic sequencing and a high quality
371 complete reference genome we were able to detect two samples with high confidence hits to an
372 ST90 *E. hormaechei* and an IncHI2 plasmid, confirming its presence in the environment. We were
373 also able to observe the overall community profile within each environmental sample, making
374 metagenomic sequencing a powerful infection control and surveillance tool for tracking (i) the types
375 of bacteria present in the environment, (ii) the types of resistance genes circulating, and (iii) the

376 effectiveness of environmental cleaning. Metagenomic sequencing does, however, have certain
377 limitations when considering its implementation in routine infection control, including the necessity
378 for a reasonable amount of starting DNA, and the chance of amplification inhibition during library
379 preparation (causing low yield or failed sequencing). Metagenomic sequencing can also be quite
380 costly[42], as the sequencing output needs to be sufficiently high to provide an accurate population
381 structure and detect low-abundance organisms. In our study, while metagenomic sequencing of the
382 environmental samples yielded positive results, it is still unclear how these reservoirs are causing
383 reinfection in patients. It is possible that healthcare workers are somehow involved, with previous
384 studies confirming carriage of a range of clinically important bacteria[43-45].
385
386 Using SMRT sequencing technology, we determined the full context of $bla_{\text{IMP-4}}$ and its location
387 within a large, complex and highly repetitive MDR region harbouring two integrons: In37 and
388 In809. In37 is a widespread class 1 integron that has been found in many bacterial species[46,47].
389 In809, which carries $bla_{\text{IMP-4}}$, has previously been described from *K. pneumoniae* (GenBank:
390 KF250428.1, HQ419285.1, AJ609296.3), *E. cloacae* (GenBank: JX101693.1) and *Acinetobacter*
391 *baumannii* (GenBank: AF445082.1, DQ532122.1) in various plasmid backgrounds including
392 IncA/C2[48], IncL/M and IncF[49]. Most recently, a carbapenemase-producing *Salmonella* sp. isolated
393 from a domestic cat in Australia was shown to contain $bla_{\text{IMP-4}}$ within an IncHI2 MDR plasmid
394 (pIMP4-SEM1)[50]. Remarkably, we found that pIMP4-SEM1 was near identical to pMS7884A
395 (Figure S5). This finding highlights the role of domestic animals (or the food they eat) as a reservoir
396 for antibiotic resistance genes.
397
398 Analysis of several CPE in this study suggested that a common plasmid or integron carrying
399 multiple antibiotic resistance genes is likely the major driver of antibiotic resistance dissemination
400 across a broad range of Enterobacteriaceae. In addition to the presence of $bla_{\text{IMP-4}}$, four resistance
401 genes ($bla_{\text{TEM-1b}}$, $bla_{\text{IMP-4}}$, *qnrB*, and *aac(6')-Ib*) carried by these isolates were previously detected

402 by PCR in the majority of 29 IMP-4-producing *E. cloacae* complex isolates surveyed from
403 Queensland hospitals between June 2009 to March 2014[13]. Only one of these isolates was ST90,
404 suggesting lateral transfer of these genes to different *Enterobacter* clones in Queensland before
405 2013. During ongoing surveillance at RBWH we identified an *E. hormaechei* isolate that also
406 carried the $bla_{\text{IMP-4}}$ plasmid, but was not closely related to the outbreak isolates, suggesting on-
407 going lateral transfer within the hospital environment. In this instance the Oxford Nanopore
408 MinION sequencing platform was instrumental in ruling out this isolate from the ongoing outbreak
409 of $bla_{\text{IMP-4}}$ ST90 *E. hormaechei*. Our work highlights the potential for integrating this highly
410 portable and rapid technology as part of the "genomic toolkit" for infection control alongside more
411 established platforms. The capacity to recognise inter-species MDR plasmid transfer is also greatly
412 enhanced by the availability of complete reference genomes, as demonstrated by the $bla_{\text{IMP-4}}$
413 positive *K. pneumoniae* isolate identified in this study.
414
415 There were significant discrepancies between meropenem MICs according to the testing modality
416 used, with the Etest consistently testing as "susceptible/intermediate" (MIC ≤4 mg/L; range 0.5-4
417 mg/L) and Vitek2 as "resistant" (usually with MICs ≥16 mg/L). According to
418 pharmacokinetic/pharmacodynamic (PK/PD) principles, provided the MIC to a carbapenem falls
419 within a susceptible range, the agent may still be effective despite the presence of a
420 carbapenemase[51]. Robust clinical data to help guide therapy are lacking and many clinicians rely on
421 combination therapy to optimize efficacy against carbapenemase-producers, largely based on
422 observational studies suggesting benefit[52,53]. The presence of carbapenemase genes may be missed
423 if clinical breakpoints for carbapenem MICs are used[35], however it can be rapidly ascertained by
424 WGS, without *a priori* assumptions of which genes are likely to be present. A wealth of additional
425 information that may influence clinical decisions can be obtained, such as the presence of other β-
426 lactamases, factors that may regulate resistance gene expression (e.g. IS elements), mutations in
427 outer-membrane proteins, or other known resistance genes.

428 **Conclusions**

429 We used an integrated WGS approach to help elucidate genetic relationships between *bla*$_{IMP-4}$
430 carbapenemase-producing *E. hormaechei* identified from our ICU and Burns facility. Real-time
431 application of this technology revealed an unexpected clonal relationship with a strain isolated from
432 the same unit two years previously. Continued routine WGS surveillance has enabled detailed
433 monitoring of the outbreak, with rapid nanopore sequencing crucial for ruling out a suspected case
434 in a previously unaffected ward. Comparisons with other Enterobacteriaceae containing *bla*$_{IMP-4}$
435 isolated from surrounding hospitals revealed its carriage on a broad host range IncHI2 plasmid,
436 assumed to be circulating via lateral gene transfer across different *E. cloacae* complex clones and
437 also *E. coli*. SMRT sequencing enabled the genetic context of all resistance genes within this
438 plasmid to be resolved and revealed the mechanism of loss of resistance genes in one *E. hormaechei*
439 strain that reverted to a fully carbapenem-susceptible phenotype. The availability of a complete *E.*
440 *hormaechei* reference chromosome and *bla*$_{IMP-4}$ plasmid were also instrumental in locating a
441 suspected source of the outbreak in the hospital plumbing with shotgun metagenome sequencing.
442 As WGS technologies become increasingly available, they are likely to prove essential tools for the
443 clinical microbiology laboratory to respond to emergent infection control threats, and can be used in
444 real-time to provide clinically meaningful information.

445

446 **Acknowledgements**

447 We thank Krispin Hajkowicz, Trish Hurst and Michelle Doidge (Infectious Diseases Department,
448 RBWH, Brisbane, Australia) for collecting environmental samples used in this study.

449 **References:**

450

451 1 Paterson, D. L. & Bonomo, R. A. Extended-spectrum beta-lactamases: a clinical update.
452 *Clinical microbiology reviews* **18**, 657-686, doi:10.1128/CMR.18.4.657-686.2005
453 (2005).

454 2 Gupta, N., Limbago, B. M., Patel, J. B. & Kallen, A. J. Carbapenem-resistant
455 Enterobacteriaceae: epidemiology and prevention. *Clinical infectious diseases : an*
456 *official publication of the Infectious Diseases Society of America* **53**, 60-67,
457 doi:10.1093/cid/cir202 (2011).

458 3 Sader, H. S., Biedenbach, D. J. & Jones, R. N. Global patterns of susceptibility for 21
459 commonly utilized antimicrobial agents tested against 48,440 Enterobacteriaceae in
460 the SENTRY Antimicrobial Surveillance Program (1997-2001). *Diagnostic microbiology*
461 *and infectious disease* **47**, 361-364 (2003).

462 4 World Health Organisation. Antimicrobial Resistance Global Report on surveillance.
463 (WHO, Geneva, 2014).

464 5 Akova, M., Daikos, G. L., Tzouvelekis, L. & Carmeli, Y. Interventional strategies and
465 current clinical experience with carbapenemase-producing Gram-negative bacteria.
466 *Clinical microbiology and infection : the official publication of the European Society of*
467 *Clinical Microbiology and Infectious Diseases* **18**, 439-448, doi:10.1111/j.1469-
468 0691.2012.03823.x (2012).

469 6 Liu, Y. Y. *et al.* Emergence of plasmid-mediated colistin resistance mechanism MCR-1 in
470 animals and human beings in China: a microbiological and molecular biological study.
471 *The Lancet. Infectious diseases*, doi:10.1016/S1473-3099(15)00424-7 (2015).

472 7 Nordmann, P. & Poirel, L. The difficult-to-control spread of carbapenemase producers
473 among Enterobacteriaceae worldwide. *Clinical microbiology and infection : the official*

474 *publication of the European Society of Clinical Microbiology and Infectious Diseases* **20**,
475 821-830, doi:10.1111/1469-0691.12719 (2014).
476 8 Magiorakos, A. P. *et al.* Multidrug-resistant, extensively drug-resistant and pandrug-
477 resistant bacteria: an international expert proposal for interim standard definitions for
478 acquired resistance. *Clinical microbiology and infection : the official publication of the*
479 *European Society of Clinical Microbiology and Infectious Diseases* **18**, 268-281,
480 doi:10.1111/j.1469-0691.2011.03570.x (2012).
481 9 Turnidge, J., Gottlieb, T., Bell, J. *Enterobacteriaceae Sepsis Outcome Programme*
482 *(EnSOP): 2013 Antimicrobial Susceptibiity Report.*,
483 <http://www.agargroup.org/files/AGAR EnSOP13 Web Report FINAL 2.pdf> (2014).
484 10 Partridge, S. R. *et al.* Emergence of blaKPC carbapenemase genes in Australia.
485 *International journal of antimicrobial agents* **45**, 130-136,
486 doi:10.1016/j.ijantimicag.2014.10.006 (2015).
487 11 Wailan, A. M. *et al.* Genomic Characteristics of NDM-Producing Enterobacteriaceae
488 Isolates in Australia and Their blaNDM Genetic Contexts. *Antimicrobial agents and*
489 *chemotherapy* **60**, 136-141, doi:10.1128/AAC.01243-15 (2015).
490 12 Chang, L. W. *et al.* Managing a nosocomial outbreak of carbapenem-resistant Klebsiella
491 pneumoniae: an early Australian hospital experience. *Internal medicine journal* **45**,
492 1037-1043, doi:10.1111/imj.12863 (2015).
493 13 Sidjabat, H. E. *et al.* Dominance of IMP-4-producing enterobacter cloacae among
494 carbapenemase-producing Enterobacteriaceae in Australia. *Antimicrobial agents and*
495 *chemotherapy* **59**, 4059-4066, doi:10.1128/AAC.04378-14 (2015).
496 14 Leung, G. H., Gray, T. J., Cheong, E. Y., Haertsch, P. & Gottlieb, T. Persistence of related
497 bla-IMP-4 metallo-beta-lactamase producing Enterobacteriaceae from clinical and
498 environmental specimens within a burns unit in Australia - a six-year retrospective

499 study. *Antimicrobial resistance and infection control* **2**, 35, doi:10.1186/2047-2994-2-
500 35 (2013).
501 15 Peleg, A. Y., Franklin, C., Bell, J. M. & Spelman, D. W. Dissemination of the metallo-beta-
502 lactamase gene blaIMP-4 among gram-negative pathogens in a clinical setting in
503 Australia. *Clinical infectious diseases : an official publication of the Infectious Diseases*
504 *Society of America* **41**, 1549-1556, doi:10.1086/497831 (2005).
505 16 Herbert, S. *et al.* Large outbreak of infection and colonization with gram-negative
506 pathogens carrying the metallo- beta -lactamase gene blaIMP-4 at a 320-bed tertiary
507 hospital in Australia. *Infection control and hospital epidemiology* **28**, 98-101,
508 doi:10.1086/508841 (2007).
509 17 Carter, I. in *PCR for Clinical Microbiology: An Australian and International Perspective*
510 (eds Margret Schuller *et al.*) 423-427 (Springer Netherlands, 2010).
511 18 Bankevich, A. *et al.* SPAdes: A New Genome Assembly Algorithm and Its Applications to
512 Single-Cell Sequencing. *J Comput Biol* **19**, 455-477, doi:10.1089/cmb.2012.0021
513 (2012).
514 19 Gurevich, A., Saveliev, V., Vyahhi, N. & Tesler, G. QUAST: quality assessment tool for
515 genome assemblies. *Bioinformatics* **29**, 1072-1075,
516 doi:10.1093/bioinformatics/btt086 (2013).
517 20 Ondov, B. D. *et al.* Mash: fast genome and metagenome distance estimation using
518 MinHash. *Genome biology* **17**, 132, doi:10.1186/s13059-016-0997-x (2016).
519 21 Jain, C., Rodriguez, R. L., Phillippy, A. M., Konstantinidis, K. T. & Aluru, S. High
520 throughput ANI analysis of 90K prokaryotic genomes reveals clear species boundaries.
521 *Nat Commun* **9**, 5114, doi:10.1038/s41467-018-07641-9 (2018).
522 22 David, M., Dzamba, M., Lister, D., Ilie, L. & Brudno, M. SHRiMP2: Sensitive yet Practical
523 Short Read Mapping. *Bioinformatics* **27**, 1011-1012,
524 doi:10.1093/bioinformatics/btr046 (2011).

525 23 Victorian-Bioinformatics-Consortium. *Nesoni*, <https://github.com/Victorian-
526 Bioinformatics-Consortium/nesoni> (2014).
527 24 Stamatakis, A. RAxML version 8: a tool for phylogenetic analysis and post-analysis of
528 large phylogenies. *Bioinformatics* **30**, 1312-1313, doi:10.1093/bioinformatics/btu033
529 (2014).
530 25 Treangen, T. J., Ondov, B. D., Koren, S. & Phillippy, A. M. The Harvest suite for rapid
531 core-genome alignment and visualization of thousands of intraspecific microbial
532 genomes. *Genome Biology* **15**, 1-15, doi:10.1186/s13059-014-0524-x (2014).
533 26 Inouye, M. *et al.* SRST2: Rapid genomic surveillance for public health and hospital
534 microbiology labs. *Genome medicine* **6**, 90, doi:10.1186/s13073-014-0090-6 (2014).
535 27 Compain, F. *et al.* Targeting relaxase genes for classification of the predominant
536 plasmids in Enterobacteriaceae. *International journal of medical microbiology : IJMM*
537 **304**, 236-242, doi:10.1016/j.ijmm.2013.09.009 (2014).
538 28 Zankari, E. *et al.* Identification of acquired antimicrobial resistance genes. *Journal of*
539 *Antimicrobial Chemotherapy* **67**, 2640-2644, doi:10.1093/jac/dks261 (2012).
540 29 Gupta, S. K. *et al.* ARG-ANNOT, a new bioinformatic tool to discover antibiotic
541 resistance genes in bacterial genomes. *Antimicrobial agents and chemotherapy* **58**, 212-
542 220, doi:10.1128/AAC.01310-13 (2014).
543 30 Li, H. & Durbin, R. Fast and accurate short read alignment with Burrows-Wheeler
544 transform. *Bioinformatics* **25**, 1754-1760, doi:10.1093/bioinformatics/btp324 (2009).
545 31 Wood, D. E. & Salzberg, S. L. Kraken: ultrafast metagenomic sequence classification
546 using exact alignments. *Genome biology* **15**, R46, doi:10.1186/gb-2014-15-3-r46
547 (2014).
548 32 Carver, T. J. *et al.* ACT: the Artemis Comparison Tool. *Bioinformatics* **21**, 3422-3423,
549 doi:10.1093/bioinformatics/bti553 (2005).

550 33 Alikhan, N. F., Petty, N. K., Ben Zakour, N. L. & Beatson, S. A. BLAST Ring Image
551 Generator (BRIG): simple prokaryote genome comparisons. *BMC genomics* **12**, 402,
552 doi:10.1186/1471-2164-12-402 (2011).
553 34 European Committee on Antimicrobial Susceptibility Testing. *Breakpoint tables for*
554 *interpretation of MICs and zone diameters version 6.0*, <http://www.eucast.org>
555 (2016).
556 35 European Committee on Antimicrobial Susceptibility Testing. *EUCAST guidelines for*
557 *detection of resistance mechanisms and specific resistances of clinical and/or*
558 *epidemiological importance*, <http://www.eucast.org/resistance_mechanisms/>
559 (2012).
560 36 Sidjabat, H. E., Heney, C., George, N. M., Nimmo, G. R. & Paterson, D. L. Interspecies
561 transfer of blaIMP-4 in a patient with prolonged colonization by IMP-4-producing
562 Enterobacteriaceae. *Journal of clinical microbiology* **52**, 3816-3818,
563 doi:10.1128/JCM.01491-14 (2014).
564 37 Kanamori, H. *et al.* Next-Generation Sequencing and Comparative Analysis of
565 Sequential Outbreaks Caused by Multidrug-Resistant Acinetobacter baumannii at a
566 Large Academic Burn Center. *Antimicrob Agents Chemother* **60**, 1249-1257,
567 doi:10.1128/aac.02014-15 (2015).
568 38 Koser, C. U. *et al.* Rapid whole-genome sequencing for investigation of a neonatal MRSA
569 outbreak. *The New England journal of medicine* **366**, 2267-2275,
570 doi:10.1056/NEJMoa1109910 (2012).
571 39 Stoesser, N. *et al.* Dynamics of MDR Enterobacter cloacae outbreaks in a neonatal unit
572 in Nepal: insights using wider sampling frames and next-generation sequencing. *J*
573 *Antimicrob Chemother* **70**, 1008-1015, doi:10.1093/jac/dku521 (2015).
574 40 Howden, B. P. *et al.* Genomic insights to control the emergence of vancomycin-resistant
575 enterococci. *MBio* **4**, doi:10.1128/mBio.00412-13 (2013).

576 41 Miller, R. R., Montoya, V., Gardy, J. L., Patrick, D. M. & Tang, P. Metagenomics for
577 pathogen detection in public health. *Genome medicine* **5**, 81, doi:10.1186/gm485
578 (2013).
579 42 Forbes, J. D., Knox, N. C., Peterson, C. L. & Reimer, A. R. Highlighting Clinical
580 Metagenomics for Enhanced Diagnostic Decision-making: A Step Towards Wider
581 Implementation. *Comput Struct Biotechnol J* **16**, 108-120,
582 doi:10.1016/j.csbj.2018.02.006 (2018).
583 43 Friedman, N. D. *et al.* Prevalence of Clostridium difficile colonization among healthcare
584 workers. *BMC Infectious Diseases* **13**, 459, doi:10.1186/1471-2334-13-459 (2013).
585 44 Dulon, M., Peters, C., Schablon, A. & Nienhaus, A. MRSA carriage among healthcare
586 workers in non-outbreak settings in Europe and the United States: a systematic review.
587 *BMC Infectious Diseases* **14**, 363, doi:10.1186/1471-2334-14-363 (2014).
588 45 Lubbert, C. *et al.* Long-term carriage of Klebsiella pneumoniae carbapenemase-2-
589 producing K pneumoniae after a large single-center outbreak in Germany. *American*
590 *journal of infection control* **42**, 376-380, doi:10.1016/j.ajic.2013.12.001 (2014).
591 46 Quiroga, M. P. *et al.* Complex Class 1 Integrons with Diverse Variable Regions, Including
592 aac(6′)-Ib-cr, and a Novel Allele, qnrB10, Associated with ISCR1 in Clinical
593 Enterobacterial Isolates from Argentina. *Antimicrobial Agents and Chemotherapy* **51**,
594 4466-4470, doi:10.1128/aac.00726-07 (2007).
595 47 Wang, M. *et al.* Plasmid-Mediated Quinolone Resistance in Clinical Isolates of
596 Escherichia coli from Shanghai, China. *Antimicrobial Agents and Chemotherapy* **47**,
597 2242-2248, doi:10.1128/aac.47.7.2242-2248.2003 (2003).
598 48 Ho, P.-L. *et al.* pIMP-PH114 Carrying bla IMP-4 in a Klebsiella pneumoniae Strain is
599 Closely Related to Other Multidrug-Resistant IncA/C2 Plasmids. *Current Microbiology*
600 **68**, 227-232, doi:10.1007/s00284-013-0471-x (2014).

601 49 Roy Chowdhury, P. *et al.* Dissemination of Multiple Drug Resistance Genes by Class 1
602 Integrons in Klebsiella pneumoniae Isolates from Four Countries: a Comparative Study.
603 *Antimicrobial Agents and Chemotherapy* **55**, 3140-3149, doi:10.1128/aac.01529-10
604 (2011).
605 50 Abraham, S. *et al.* Isolation and plasmid characterization of carbapenemase (IMP-4)
606 producing Salmonella enterica Typhimurium from cats. *Scientific Reports* **6**, 35527,
607 doi:10.1038/srep35527 (2016).
608 51 Morrill, H. J., Pogue, J. M., Kaye, K. S. & LaPlante, K. L. Treatment Options for
609 Carbapenem-Resistant Enterobacteriaceae Infections. *Open forum infectious diseases* **2**,
610 ofv050, doi:10.1093/ofid/ofv050 (2015).
611 52 Tumbarello, M. *et al.* Predictors of mortality in bloodstream infections caused by
612 Klebsiella pneumoniae carbapenemase-producing K. pneumoniae: importance of
613 combination therapy. *Clin Infect Dis* **55**, 943-950, doi:10.1093/cid/cis588 (2012).
614 53 Daikos, G. L. *et al.* Carbapenemase-producing Klebsiella pneumoniae bloodstream
615 infections: lowering mortality by antibiotic combination schemes and the role of
616 carbapenems. *Antimicrob Agents Chemother* **58**, 2322-2328, doi:10.1128/AAC.02166-
617 13 (2014).
618
619

620 **Table 1: Antibiotic Resistance Profile as determined by Etest, Vitek2 and ResFinder**

Patient			1		2				3			
Strain (MS)			7884	7885	7886	7887	7888	7889	7890	7891	7892	7893
Source			ETT	urine	ETT	urine	blood	urine	ETT	blood	Leg swab	blood
ST			90	90	90	90	90	90	90	90	90	90
Plasmid			IncHI2	IncHI2	IncHI2	IncHI2	IncHI2	IncHI2	IncHI2	IncHI2	IncHI2	IncHI2
MIC(mg/L) by E-test		Ertapenem	1	2	4	2	0.5	0.032	2	0.5	0.5	2
		Imipenem	2	1	4	8	1	0.5	2	1	1	4
		Meropenem	0.5	1	4	2	0.5	0.032	2	1	0.5	0.5
β-lactams and Cephalosporins	Vitek2 [1]	Tim	≥128	≥128	≥128	≥128	≥128	32	≥128	≥128	≥128	≥128
		Mer	≥16	≥16	≥16	≥16	≥16	≤0.25	≥16	≥16	≥16	≥16
		Taz	16	16	16	16	16	8	16	16	16	16
		Fox	≥64	≥64	≥64	≥64	≥64	≥64	≥64	≥64	≥64	≥64
		Caz	≥64	≥64	≥64	≥64	≥64	≤1	≥64	≥64	≥64	≥64
		Cro	16	16	16	16	16	≤1	16	16	16	8
		Fep	2	2	4	2	2	≤1	2	2	2	4
	Res	*ampC*	+	+	+	+	+	+	+	+	+	+
		bla$_{OXA-1}$	+	+	+	+	+	-	+	+	+	+
		bla$_{IMP-4}$	+	+	+	+	+	-	+	+	+	+
		bla$_{TEM-1B}$	+	+	+	+	+	+	+	+	+	+
Aminoglycosides	Vitek2	Ami	≤2	≤2	≤2	≤2	≤2	8	≤2	≤2	≤2	≤2
		Gent	≥16	≥16	≥16	≥16	≥16	≤1	≥16	≥16	≥16	≥16
		Tob	8	8	8	8	8	≥16	8	8	8	8
	Res	*strB*	+	+	+	+	+	+	+	+	+	+
		strA	+	+	+	+	+	+	+	+	+	+
		aac(6')Ib-cr	+	+	+	+	+	+	+	+	+	+
		aac(3)-IId	+	+	+	+	+	-	+	+	+	+
Quinolones	Vitek2	Cip	≤0.25	0.5	≤0.25	≤0.25	0.5	≤0.25	0.5	0.5	1	≤0.25
		Nor	2	2	2	2	2	0.5	2	2	2	1
	Res	*qnrB2*	+	+	+	+	+	-	+	+	+	+
Sulphonamide/ Trimethoprim	Vitek2	Tmp/smx	≥320	≥320	≥320	≥320	≥320	≥320	≥320	≥320	≥320	≥320
	Res	*sulI*	+	+	+	+	+	+	+	+	+	+
		dfrA18	+	+	+	+	+	+	+	+	+	+
Rifampicin	Res	*arr3*	+	+	+	+	+	-	+	+	+	+
Macrolide	Res	*mph(A)*	+	+	+	+	+	-	+	+	+	+
Phenicols	Res	*catA2*	+	+	+	+	+	+	+	+	+	+
		catB3	+	+	+	+	+	+	+	+	+	+
Tetracycline	Res	*tet(D)*	+	+	+	+	+	+	+	+	+	+

621

622 [1]Res = ResFinder Antimicrobial Resistance gene database; Vitek = Vitek2 automated susceptibility

623 MIC (mg/L): Tim=ticarcillin-clavulanate, Taz=piperacillin-tazobactam, Fox=cefoxitin,

624 Caz=ceftazidime, Cro=ceftriaxone, Fep=cefepime, Mer=meropenem, Ami=amikacin,

625 Gent=gentamicin, Tob=tobramycin, Cip=ciprofloxacin, Nor=norfloxacin, Tmp/smx=trimethoprim-

626 sulphamethoxazole

627 **Figure Legends:**

628 **Figure 1: RBWH clinical case study outline**: Three burns patients were admitted to the RBWH
629 ICU ward in mid 2015. Patient 1 (Female, 43-years-old) and Patient 2 (Female, 58-years-old) were
630 admitted on the same day. Subsequent to admission, both patients developed carbapenem-resistant
631 *E. hormaechei* infections, with two samples taken from patient 1 (source = ETT [purple] and urine
632 [grey]), and 4 samples taken from patient 2 (source = ETT [purple], urine [grey], and blood [red]).
633 Patient 3 (Female, 39-years-old) was admitted 37 days after the patient 1 and 2 had been admitted
634 and after they had been discharged from the ICU. Patient 3 also developed infection due to a
635 carbapenem-resistant *E. cloacae* infection, and had 4 samples taken from ETT (purple), blood (red)
636 and wound sites (orange). After intensive antibiotic and antifungal treatment, the patient was
637 palliated on day 47 of ICU admission. Sequencing and genomics analysis of all 10 isolates was
638 undertaken following confirmation of all three patients being infected with $bla_{\text{IMP-4}}$-producing *E.*
639 *hormaechei* (period shown in purple shading). Environmental swabbing was undertaken 65 days
640 after the initial admission of patient 1 and 2, and 29 days after the admission of patient 3 (orange
641 square).

642

643 **Figure 2: CPE isolate timeline and relationship matrix: A.** 10 isolates were collected from 3
644 patients at various time-points in mid 2015. Coloured blocks indicate the source of the isolated
645 strain: purple: respiratory, grey: urine, red: blood, and orange: wound. **B.** Relationship matrix (left)
646 shows specific core single nucleotide variant (SNV) differences identified between strains. Strains
647 within the same circle have identical core SNV profiles. Lines connecting circles represent
648 accumulating SNV differences between strains (not-to-scale), where each line represents one SNV
649 (including nucleotide deletion). Specific nucleotide differences between isolates are given in the
650 table in panel B. Locations and consequences of nucleotide change are shown in Supplementary
651 Dataset S1. All 11 isolates differed by 5 SNVs overall.

652

653 **Figure 3: Core SNP Maximum likelihood (ML) tree of Hospital A and B *E. hormaechei***
654 **isolates in relation to RBWH isolates:** Trimmed reads from 6 *E. hormaechei* isolates (Hospital A
655 and B) were aligned to the reference *E. hormaechei* Ecl1 (isolated in 2013 at the RBWH) to
656 determine core single nucleotide polymorphisms (SNPs) between all isolates. Ecl1 in this figure
657 represents all 2015 RBWH isolates (n=10) as they were found to be near identical at the core
658 genome level. 63,861 core SNPs were identified and used to generate a ML tree with RAxML
659 (1000 bootstrap replicates), which determined no relationship between the RBWH isolates (pink)
660 and the Hospital B (blue)/Hospital A (orange) isolates. Four closely related strains were identified
661 from Hospitals A and B (red box). Alignment of trimmed reads from MS8077, MS8079 and
662 MS7926 to MS7924 identified 117 core SNPs, however, a number of these SNPs were removed as
663 they were identified as residing within transposon or phage regions. The remaining 58 core SNPs
664 were used to generate a ML tree (1000 bootstrap replicates), showing that Hospital B strains differ
665 by less than 20 SNPs.
666
667 **Figure 4: Large IncHI2 plasmid with ~55 kb multidrug resistance region containing IMP-4**
668 **carbapenemase: A.** A 330,060 bp IncHI2 plasmid carrying multiple resistance operons, including a
669 large ~55 kb multidrug resistance (MDR) region, was fully recovered and assembled using Pacific
670 Biosciences (PacBio) SMRT sequencing of strain MS7884 (patient 1, isolate 1). The multidrug
671 resistance region was found to contain two class 1 integrons (In809, In37) along with several other
672 antibiotic resistance genes, as indicated. Comparison of this MDR region to publicly available
673 genomes found a close match to pEl1573, isolated in 2012 from an *E. cloacae* isolate in Sydney,
674 Australia. **B.** A predicted model of homologous recombination between two nearly identical
675 *aacA4/aac(6')-Ib-cr* genes (red asterisks) within the ~55 kb MDR region in MS7889 (patient 2,
676 isolate 4, IMP-, carbapenem-susceptible) leading to the loss of a ~34 kb region containing $bla_{\text{IMP-4}}$
677 as well as several other antibiotic resistance genes.
678

Figure 1

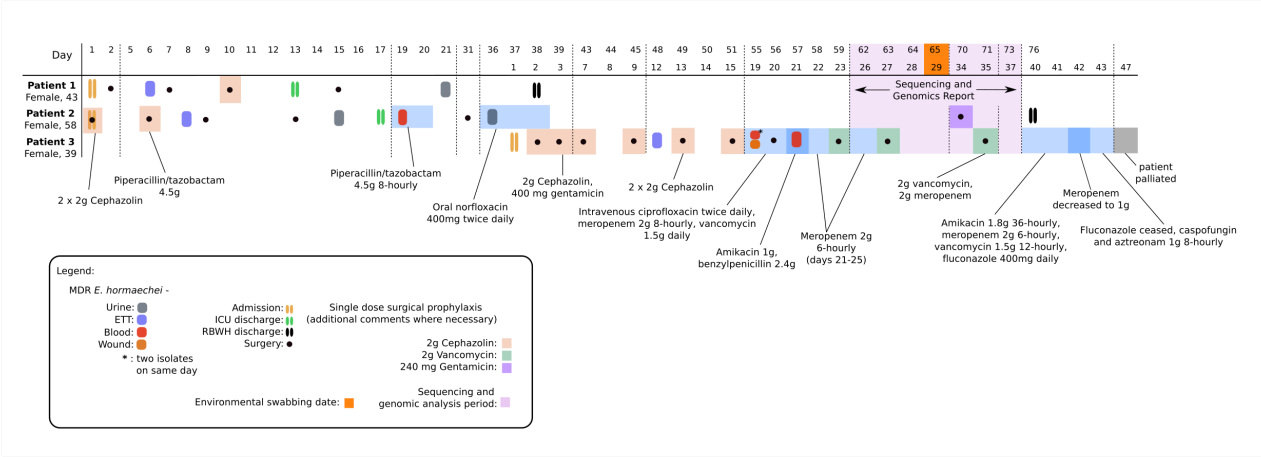
Day
Patient 1
Female, 43
Patient 2
Female, 58
Patient 3
Female, 39
Sequencing and Genomics Report
2 x 2g Cephazolin
Piperacillin/tazobactam 4.5g
Piperacillin/tazobactam 4.5g 8-hourly
Oral norfloxacin 400mg twice daily
2g Cephazolin, 400 mg gentamicin
2 x 2g Cephazolin
Intravenous ciprofloxacin twice daily, meropenem 2g 8-hourly, vancomycin 1.5g daily
Amikacin 1g, benzylpenicillin 2.4g
Meropenem 2g 6-hourly (days 21-25)
2g vancomycin, 2g meropenem
Amikacin 1.8g 36-hourly, meropenem 2g 6-hourly, vancomycin 1.5g 12-hourly, fluconazole 400mg daily
Meropenem decreased to 1g
Fluconazole ceased, caspofungin and aztreonam 1g 8-hourly
patient palliated
Legend:
MDR E. hormaechei -
Urine:
ETT:
Blood:
Wound:
* : two isolates on same day
Admission:
ICU discharge:
RBWH discharge:
Surgery:
Single dose surgical prophylaxis (additional comments where necessary)
2g Cephazolin:
2g Vancomycin:
240 mg Gentamicin:
Environmental swabbing date:
Sequencing and genomic analysis period:

682 **Figure 2**

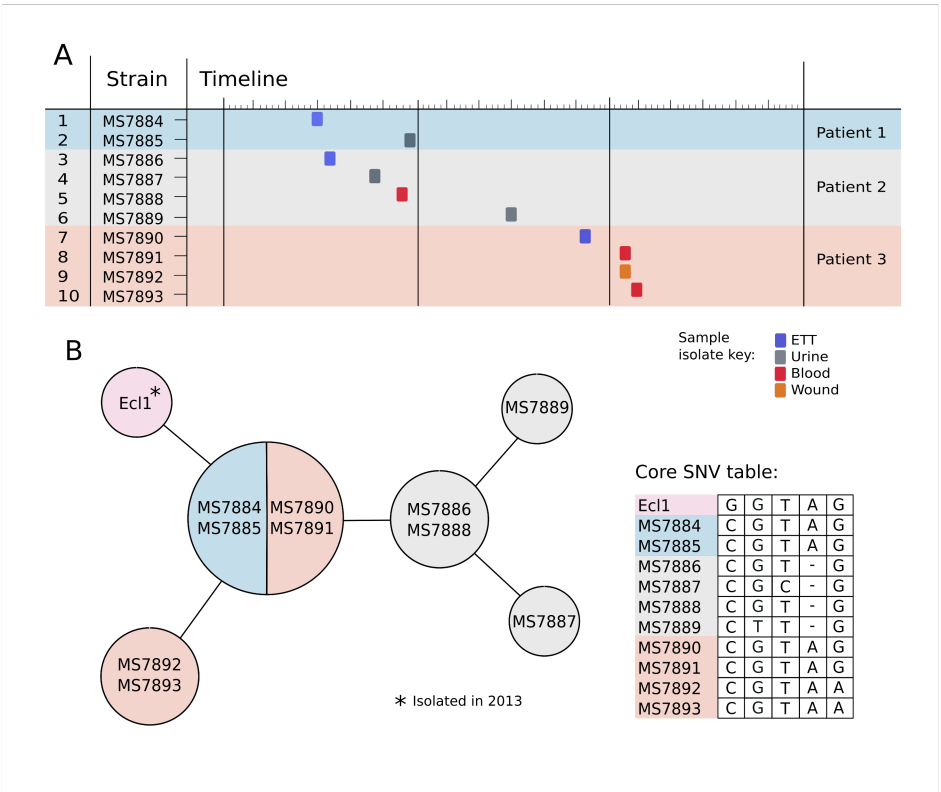

683
684

Figure 3

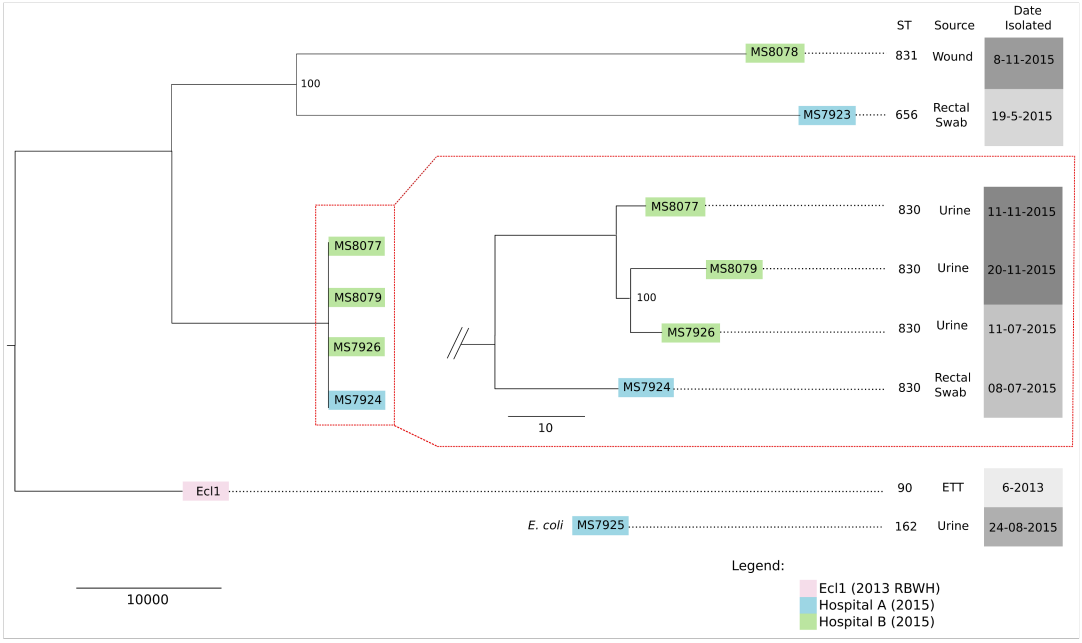
ST
Source
Date Isolated
MS8078
831
Wound
8-11-2015
100
MS7923
656
Rectal Swab
19-5-2015
MS8077
MS8079
MS7926
MS7924
MS8077
830
Urine
11-11-2015
MS8079
830
Urine
20-11-2015
100
MS7926
830
Urine
11-07-2015
MS7924
830
Rectal Swab
08-07-2015
10
Ecl1
90
ETT
6-2013
E. coli
MS7925
162
Urine
24-08-2015
10000
Legend:
Ecl1 (2013 RBWH)
Hospital A (2015)
Hospital B (2015)

688 **Figure 4**

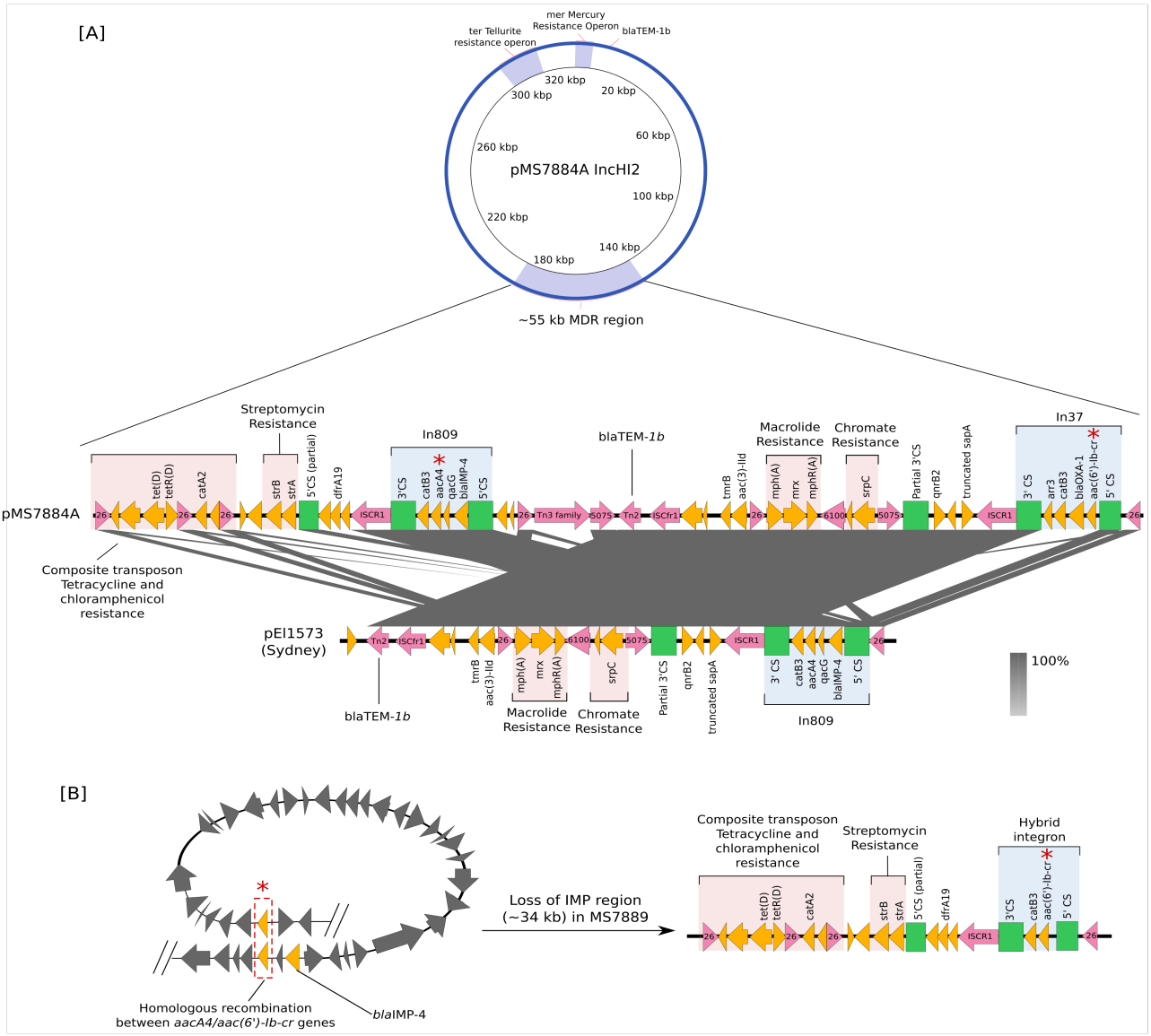

689