Genomic investigation of an outbreak of carbapenemase-producing *Enterobacter cloacae:* long-read sequencing reveals the context of *bla*IMP4 on a widely distributed IncHI2 plasmid

Leah W. Roberts[1,2,3], Patrick N. A. Harris[4,5], Nouri L. Ben Zakour[1,2,3], Brian M. Forde[1,2,3], Elizabeth Catchpoole[5], Mitchell Stanton-Cook[1,2], Minh-Duy Phan[1,2], Hanna Sidjabat[4], Haakon Bergh[5], Claire Heney[5], Jayde A. Gawthorne[1,2], Jeffrey Lipman[6], Anthony Allworth[7], Kok-Gan Chan[8], Teik Min Chong[8], Wai-Fong Yin[8], Mark A. Schembri[1,2], David L. Paterson[2,4,9], Scott A. Beatson[1,2,3]

1. School of Chemistry and Molecular Biosciences, The University of Queensland, Brisbane, QLD, Australia
2. Australian Infectious Diseases Research Centre, The University of Queensland, Brisbane, QLD, Australia
3. Australian Centre for Ecogenomics, The University of Queensland, Brisbane, QLD, Australia
4. The University of Queensland, UQ Centre for Clinical Research, Brisbane, QLD, Australia
5. Pathology Queensland, Central Laboratory, Brisbane, QLD, Australia
6. Burns Trauma and Critical Care Research Centre, The University of Queensland, Brisbane, QLD, Australia
7. Infectious Disease Unit, Royal Brisbane & Women's Hospital, Brisbane, QLD, Australia
8. Division of Genetics and Molecular Biology, Institute of Biological Sciences, Faculty of Science, University of Malaya, Kuala Lumpur, Malaysia
9. Wesley Medical Research, The Wesley Hospital, Auchenflower, QLD, Australia

40-word summary: Whole genome sequencing of *bla*$_{IMP-4}$-producing *Enterobacter cloacae* detected an unknown persistent source of infection within the hospital. All isolates were found to carry multiple antibiotic resistance genes, located in a large multidrug resistant region on a 330,060 bp IncHI2 plasmid.

Key words: *bla*$_{IMP-4}$; carbapenem resistant, whole genome sequencing; plasmid; carbapenemase-producing Enterobacteriaceae (CPE)

Word count (main text): 3,069

Corresponding author:

Associate Professor Scott A. Beatson, School of Chemistry and Molecular Biosciences, The University of Queensland, Brisbane 4072, QLD, Australia

Telephone +61-7-33654863

Email s.beatson@uq.edu.au

Alternative corresponding author:

Dr Patrick N. A. Harris, UQ Centre for Clinical Research, The University of Queensland, Brisbane, QLD, Australia

Telephone +61 7 3346 5555

Email p.harris@uq.edu.au

Abstract

Background: We describe whole genome sequencing (WGS) to analyse a cluster of *bla*$_{IMP-4}$ carbapenemase-producing *Enterobacter cloacae*.

Methods: A cluster of carbapenemase-producing *E. cloacae* were identified over a two month period in 2015 within an Intensive Care Unit (ICU)/Burns Unit in Brisbane, Australia. Phylogenetic relationships based on core single nucleotide polymorphisms (SNPs) were determined using WGS. Genomic comparisons were made to IMP-producing Enterobacteriaceae from neighbouring hospitals and to publicly available genomes to contextualise the isolates in the broader community. Pacific Biosciences Single Molecule Real-Time (SMRT) sequencing of one IMP-4-producing *E. cloacae* strain was used to resolve the full context of the resistance genes.

Results: All outbreak strains were sequence type 90 and differed by only four core SNPs. WGS analysis unequivocally linked all 10 isolates to a 2013 isolate from the same ward, confirming the hospital environment as the most likely original source of infection in the 2015 cases. No clonal relationship was found to IMP-4-producing isolates identified from other local hospitals. However, all IMP-4-producing strains were found to possess an identical *bla*$_{IMP-4}$ carried on a large IncHI2 plasmid.

Conclusions: During the course of an outbreak investigation, WGS revealed the transmission dynamics of a carbapenemase-producing *E. cloacae* cluster, linking it to a historical isolate from the same Unit and revealing the full context of *bla*$_{IMP-4}$ on a multi-drug resistant IncHI2 plasmid that appears to be widely distributed in Australia.

Abstract word count: 228

71

72 **Introduction**:

73 Carbapenem antibiotics have become the mainstay of therapy for serious infections caused by
74 multidrug resistant (MDR) Gram-negative bacteria, especially for strains expressing extended-
75 spectrum beta-lactamase (ESBL) or AmpC-type enzymes [1]. Increased use has driven resistance to
76 carbapenems and the emergence of carbapenemase-producing Enterobacteriaceae (CPE) and
77 carbapenem-resistant Enterobacteriaceae (CRE), which include common enteric species such as
78 *Escherichia coli*, *Klebsiella pneumoniae* and *Enterobacter* spp. [2].

79

80 Before 2005, an estimated 99.9% of Enterobacteriaceae were susceptible to carbapenems [3].
81 However, the isolation of CRE has since increased dramatically and these organisms are now
82 reported in all WHO health regions [4]. The mortality rates for CRE infections are reported to be as
83 high as 48% [5], and resistance to last-line antibiotics used in lieu of carbapenems, such as colistin,
84 has also emerged [6].

85

86 Resistance to carbapenems in Enterobacteriaceae occurs via a range of mechanisms. Of greatest
87 concern is the acquisition of genes encoding carbapenemases [7]. This most frequently occurs via
88 transfer of mobile genetic elements, such as plasmids, occasionally carrying multiple β-lactamases
89 co-located with other resistance determinants, rendering these strains MDR or extensively drug-
90 resistant (XDR) [8]. Australia has experienced low rates of CRE [9], although sporadic introduction
91 of *K. pneumoniae* carbapenemase (KPC) [10] and New Delhi metallo-beta-lactamase (NDM) [11]
92 has been reported, including significant nosocomial outbreaks [12]. The most frequently
93 encountered carbapenemase in Australia is $bla_{\text{IMP-4}}$, particularly in *Enterobacter* spp. [13]. IMP-
94 producing *Enterobacter* spp. have caused occasional outbreaks within intensive care or burns units
95 in Australian hospitals [14-16].

96

Here, we describe the use of whole genome sequencing (WGS) to investigate an outbreak of IMP-4-producing *Enterobacter cloacae* within an Intensive Care Unit (ICU) and Burns facility.

Clinical case report

Two patients in mid 2015 were transferred from regional Queensland hospitals to the ICU with burn injuries sustained from the same accident (Figure 1). *E. cloacae* was cultured from the endotracheal tube (ETT) of patients 1 and 2 on day 6 and 8 of admission, respectively. Both *E. cloacae* were confirmed as MDR by phenotypic testing used in the diagnostic setting (Table 1). Real-time PCR amplification of $bla_{\text{IMP-4}}$ confirmed their status as carbapenemase-producers. Both of these patients were previously well, with no prior hospital admission or contact with healthcare facilities. Neither had been resident or hospitalized overseas for more than 20 years.

Patient 1 underwent debridement and split skin grafting for 29% total body surface area burns on day 2 of ICU admission and subsequently had 3 procedures in the burns operating rooms (Figure 1). An additional MDR-*E. cloacae* was isolated from urine on day 21, eight days after discharge from the ICU. After no further colonisation of MDR-*E. cloacae,* Patient 1 was discharged from the hospital on day 38.

Patient 2 underwent multiple grafting and debridement procedures and was discharged from the ICU on day 17 (Figure 1). MDR-*E. cloacae* colonisation from the ETT and from urine was noted on day 8 and day 15, respectively. By day 19, the patient developed clinical signs of sepsis, with a phenotypically identical isolate identified in blood cultures and from a central venous line (CVL) tip culture. She received piperacillin/tazobactam 4.5 grams 8-hourly for 2 days, improved following line removal and did not receive further antibiotics for this episode. A subsequent *E. cloacae* isolated from urine collected from a urinary catheter 17 days later demonstrated a different

122 antibiogram with susceptibility to third generation cephalosporins, meropenem and gentamicin.
123 She received 3 days of oral norfloxacin 400mg twice daily with microbiological resolution.
124
125 Patient 3, a 39-year old woman, was admitted with 66% total body surface area burns to the same
126 ICU 5 weeks after Patient 1 and 2 were admitted and 20 days after they had been discharged from
127 the ICU (Figure 1). MDR-*E. cloacae* was cultured from the ETT of Patient 3 on day 12 of ICU
128 admission. She had frequent brief admissions to several hospitals since 2010 (never to ICU), and no
129 MDR Gram-negative bacilli were identified in clinical or screening samples during previous
130 admissions. MDR-*E. cloacae* with *Pseudomonas aeruginosa* were isolated from 8 skin swabs and
131 an additional ETT aspirate. On days 19 and day 21, MDR-*E. cloacae* were isolated from blood
132 cultures in the context of skin graft breakdown and signs of systemic inflammatory response
133 syndrome (SIRS) with increasing inotrope requirements (Figure 1). *Streptococcus mitis* was
134 cultured from blood on day 19. On day 36, her condition worsened with signs of SIRS.
135 Transesophageal echocardiography demonstrated aortic and mitral valve lesions consistent with
136 endocarditis. Pancytopenia developed, with a bone marrow aspirate and trephine suggestive of
137 peripheral consumption. Multiple suspected cerebral, pulmonary, splenic and renal septic emboli
138 were identified on imaging. She was palliated on day 47 of admission due to extensive cerebral
139 emboli (Figure 1).
140
141 **Materials & Methods**
142 **Study setting**
143 Primary isolates were obtained from patients admitted to the Royal Brisbane & Women's Hospital
144 (RBWH), a tertiary referral hospital with 929 beds in South-East Queensland, Australia. Additional
145 IMP-producing isolates, cultured from patients admitted to other hospitals in the metropolitan
146 Brisbane area (referred to as Hospital A and B), were obtained from the Central Laboratory of
147 Pathology Queensland for comparison (Table S3).

148

149 **Antimicrobial susceptibility testing and carbapenemase detection**

150 All bacterial isolates were identified by matrix-assisted laser desorption/ionization mass
151 spectrometry (MALDI-TOF) (Vitek MS; bioMérieux, France). Antimicrobial susceptibility testing
152 was carried out using Vitek 2 automated AST-N426 card (bioMérieux) with Etest to determine
153 MICs for meropenem, imipenem and ertapenem. Carbapenemase activity was assessed by the use
154 of the Carba-NP test (RAPIDEC; bioMérieux) and the presence of the $bla_{\text{IMP-4-like}}$ carbapenemase
155 gene confirmed using an in-house multiplex real-time PCR (also targeting NDM, KPC, VIM and
156 OXA-48-like carbapenemases) [17].

157

158 **Bacterial DNA extraction**

159 Single colonies were selected from primary bacterial cultures and grown in 10 mL Lysogeny broth
160 (LB) at 37°C overnight (shaking 250rpm). DNA was extracted using the UltraClean® Microbial
161 DNA Isolation Kit (MO BIO Laboratories) as per manufacturer instructions.

162

163 **Genome sequencing, Quality Control and De Novo Assembly**

164 All isolates in this study were sequenced using Illumina (see supplementary appendix). Reads
165 passing quality control (QC) were assembled using Spades v3.6.0 [18] under default parameters
166 (without careful flag). Contigs with coverage less than 10x were removed from final assemblies.
167 Final assembly metrics were checked using QUAST v2.3 [19] (Table S3).

168

169 **Phylogenetic analysis**

170 SHRiMP (v2.2.3) [20] (as implemented in Nesoni v0.130 [21] under default settings) was used to
171 determine core single nucleotide polymorphisms (SNPs) between the ten 2015 RBWH *E. cloacae*
172 genomes to the reference Ecl1 and create a minimal-spanning tree. Further details of the Ecl1
173 assembly and SNP-calling process are provided in the supplementary appendix. Maximum likelihood

174 trees of Ecl1 and the 6 *E. cloacae* from hospitals A and B were built using RAxML (v8.1.15) [22]
175 based on the Nesoni core SNPs. RAxML was run with the GTRGAMMA nucleotide substitution rate
176 and an initial seed length of 456 (bootstrap 1000 with Lewis ascertainment correction). Core genome
177 size was estimated using Parsnp v1.2 [23].
178
179 **Multi-locus Sequence Typing (MLST), Plasmid Typing and Antimicrobial Resistance (AMR)**
180 **Gene Profiling**
181 MLST of isolate raw reads was performed using srst2 v0.1.5 [24] with typing schemes available on
182 PubMLST (http://pubmlst.org/). Plasmid replicon typing was done based on Compain *et al.* [25].
183 Antibiotic resistance genes were detected using the ResFinder database [26] and the ARG-ANNOT
184 database [27] with BLASTn and srst2 [24] respectively. Manual confirmation was carried out using
185 BLASTn and read mapping using Burrows-Wheeler Aligner (BWA v0.7.5a-r405) [28]. Further
186 details of whole genome comparisons and phage analysis are given in the supplementary appendix.
187
188 **Pacific Biosciences (PacBio) Single Molecule Real-Time (SMRT) Sequencing**
189 A representative *E. cloacae* isolate from patient 1 (MS7884) was grown on LB agar at 37°C
190 overnight. IMP positive colonies (determined by colony PCR) were grown overnight in 15 ml LB
191 broth with 2 µg/ml meropenem to avoid plasmid loss. Genomic DNA was extracted using
192 UltraClean® Microbial DNA Isolation Kit (MoBio) as per manufacturer instructions. 18.7 µg of
193 DNA was prepared for sequencing using an 8-12 kb insert library and sequenced on a PacBio RSII
194 sequencer using 1 SMRT cell. Further details of the assembly, annotation methods and plasmid
195 stability in MS7884 are given in the supplementary appendix.
196
197 **<u>Accession numbers</u>**
198 Genome data has been deposited under Bioproject PRJNA383436. Illumina raw
199 reads (SRS2350257-SRS2350273) and PacBio raw reads (SRX2999346-SRX2999347) have been

200 deposited in the Sequence Read Archive. The MS7884A chromosome (CP022532), pMS7884A
201 plasmid (CP022533), and pMS7884B plasmid (CP022534) have been deposited in GenBank.
202
203
204 **Results**
205 **All three patients carry carbapenemase-producing *E. cloacae***
206 With the exception of MS7889 (isolated from the urine of Patient 2 on day 36), all *E. cloacae*
207 isolates collected from the outbreak were resistant to ceftriaxone, ceftazidime, ticarcillin-
208 clavulanate, piperacillin-tazobactam, meropenem, gentamicin and trimethoprim-sulphamethoxazole
209 by Vitek 2 testing (Table 1) and demonstrated carbapenemase production by Carba-NP. The MICs
210 for meropenem were considerably lower when tested by Etest [29], often falling below the
211 clinically susceptible breakpoint defined by EUCAST, but above the epidemiological cut-off
212 (ECOFF) [30]. MS7889 was fully susceptible to carbapenems (meropenem MIC=0.032 by Etest)
213 and was negative for IMP-4-like genes by PCR (Table 1).
214
215 **Whole genome sequencing identifies a link to a previous IMP-producing isolate**
216 WGS of 10 isolates from patients 1, 2 and 3 was initiated after microbiological confirmation of a
217 $bla_{\text{IMP-4}}$ *E. cloacae* isolate from a third patient from the RBWH ICU (Figure 1). *In silico* MLST
218 showed all belonged to sequence type (ST) 90 with the majority exhibiting the same resistance gene
219 profile, including a 100% identical $bla_{\text{IMP-4}}$ gene (Table 1). The exception was the carbapenem
220 susceptible isolate MS7889, which was confirmed by WGS to have lost the $bla_{\text{IMP-4}}$ gene as well as
221 several additional resistance genes conserved in the other *E. cloacae* isolates (Table 1). All ten
222 isolates contained an IncHI2 plasmid. Sequence analysis suggests that AmpC derepression is
223 unlikely to contribute to carpabenemase activity in these strains (further details are given in the
224 supplementary appendix).
225

226 Comparison of the *E. cloacae* genomes to publicly available draft assemblies identified a close
227 match to *E. cloacae* Ecl1 (GenBank: JRFQ01000000), an ST90 strain isolated from a burns patient
228 at the RBWH ICU almost two years prior to the 2015 outbreak [13, 31]. Antibiotic resistance
229 profiling of the Ecl1 genome revealed an identical resistance profile compared to the majority of the
230 2015 isolates (Table 1).
231
232 **The 2015 outbreak isolates were near identical at the core genome level to an isolate from**
233 **2013**
234 To investigate the relationship between the isolates at single-nucleotide resolution, reads from the
235 2015 RBWH isolates were mapped to *E. cloacae* draft assembly for Ecl1. All 2015 RBWH isolates
236 differed by fewer than five core SNPs (4,934,357 bp core genome), consistent with a direct
237 ancestral relationship (Figure 2). Two isolates from Patient 1 and two isolates from Patient 3 were
238 indistinguishable at the core genome level (Figure 2), although all of the isolates from Patient 3 had
239 lost a prophage region (refer supplementary appendix). Ecl1 (isolated in 2013) was very closely
240 related to these isolates, differing by only one core SNP. All four isolates from Patient 2 contained a
241 discriminatory single-nucleotide deletion, thereby ruling out Patient 2 to Patient 3 transmission
242 (Figure 2).
243
244 **Integration of WGS with infection control response**
245 WGS analysis unequivocally linked all 10 isolates to the 2013 isolate Ecl1 from the same ward,
246 confirming that the clone had not been an incursion from the accident affecting Patient 1 and 2 and
247 that the hospital environment was suspected as the most likely original source of infection in the
248 2015 cases. In response, 28 environmental samples from the ICU, burns wards and operating
249 theatres were collected 65 days after patient 1 and 2 were admitted and inoculated onto MacConkey
250 agar with 8 mg/mL gentamicin (laboratory standard screening medium for MDR Gram-negative
251 bacilli). No carbapenemase-producing *Enterobacter* spp. were detected. Additionally, no

252 carbapenemase-producing *Enterobacter* spp. were detected in patients admitted to the ICU or burns
253 unit for a 6-month period following the outbreak.
254
255 **Sequencing of additional CPE isolates identify a circulating IMP-4-carrying plasmid in**
256 **Queensland**
257 To determine the broader context of IMP-producing Enterobacteriaceae in surrounding hospitals,
258 seven additional $bla_{\text{IMP-4}}$ producing Enterobacteriaceae (*E. cloacae* n=6, *E. coli* n=1) were
259 sequenced. These represented all $bla_{\text{IMP-4}}$ producing Enterobacteriaceae identified from Brisbane
260 public hospitals via Pathology Queensland for 2015. Both MLST and SNP analysis found no
261 relationship to the 2015 RBWH *E. cloacae*, with approximately 50,000 SNP differences between
262 the ST90 representative strain Ecl1 and its nearest non-ST90 phylogenetic neighbour (Figure 3, also
263 see supplementary appendix). Despite not being clonally related, all additional Enterobacteriaceae
264 isolates possessed very similar antibiotic resistance gene profiles (Table S3), suggesting the
265 possibility of lateral gene transfer via mobile genetic elements (e.g. integrons and/or plasmids).
266 WGS analysis revealed that all 18 CPE isolates in this study, including the *E. coli* isolate, harbored
267 an IncHI2 plasmid (plasmid ST1) and an identical $bla_{\text{IMP-4}}$ gene, strongly suggesting plasmid-
268 mediated circulation of $bla_{\text{IMP-4}}$ between Enterobacteriaceae in Brisbane hospitals.
269
270 **$bla_{\text{IMP-4}}$ resides in the class 1 integron In809 on an IncHI2 plasmid**
271 Due to the presence of multiple repetitive elements surrounding $bla_{\text{IMP-4}}$, including insertion
272 sequences (IS) and two suspected integrons with similar gene content, we were unable to accurately
273 resolve the context of $bla_{\text{IMP-4}}$ using Illumina sequencing alone. One representative isolate
274 (MS7884) was sequenced twice using PacBio SMRT sequencing, which was able to resolve a
275 complete closed chromosome of 4,810,853 bp and two plasmids: pMS7884A, a 330,060 bp IncHI2
276 plasmid carrying $bla_{\text{IMP-4}}$ within a ~55 kb MDR region (Figure 4A), and pMS7884B, a smaller
277 untypeable plasmid of 126,208 bp. The pMS7884A MDR region harbours two different class 1

278 integrons (In37 and In809) as well as a composite transposon conferring resistance to tetracycline
279 and chloramphenicol (Figure 4A). BLASTn and read-mapping analysis revealed the presence of
280 identical plasmids in all but one of the 18 isolates sequenced by Illumina in this study: isolate
281 MS7889 is predicted to have lost a ~34 kb region from its MDR plasmid, including $bla_{\text{IMP-4}}$, due to
282 homologous recombination between two almost identical aminoglycoside resistance genes (Figure
283 4B). Notably in 15% of cases, sub-culture of MS7884 in the absence of meropenem selection
284 resulted in loss of $bla_{\text{IMP-4}}$ or the entire plasmid. Further details of the complete MS7884 genome
285 and plasmid analysis are presented in the supplementary appendix.
286
287 **Discussion**
288 While there has been a dramatic improvement in the cost and availability of whole genome
289 sequencing (WGS), it is not clear how these advances can best be incorporated into routine clinical
290 microbiology. Several studies have demonstrated the ability of WGS to provide optimal
291 discrimination between strains to help inform a response to outbreaks or nosocomial acquisition
292 [32-35]. Here, we demonstrate that WGS can help rapidly characterize an outbreak in a critical care
293 setting, particularly regarding transmission pathways.
294
295 The finding that the outbreak strains were virtually indistinguishable from an IMP-4-producing *E.*
296 *cloacae* isolated two years previously from the same unit was unexpected and highlighted the need
297 to consider environmental sources and potential person-to-person transmission, as has been
298 previously described in Australian ICU and burns units [14]. Although we were unable to isolate
299 any IMP-producing *Enterobacter* spp. from environmental sampling, it is possible that this may
300 have been due to enhanced cleaning and additional infection control measures. Healthcare workers
301 are also a possible reservoir, with previous studies confirming carriage of a range of clinically
302 important bacteria [36-38].
303

304 Using SMRT sequencing technology, we determined the full context of *bla*$_{IMP-4}$ and its location
305 within a large, complex and highly repetitive MDR region harbouring two integrons: In37 and
306 In809. In37 is a widespread class 1 integron that has been found in many bacterial species [39, 40].
307 In809, which carries *bla*$_{IMP-4}$, has previously been described from *Klebsiella pneumoniae*
308 (GenBank: KF250428.1, HQ419285.1, AJ609296.3), *E. cloacae* (GenBank: JX101693.1) and
309 *Acinetobacter baumannii* (GenBank: AF445082.1, DQ532122.1) in various plasmid backgrounds
310 including IncA/C2 [41], IncL/M and IncF [42]. Most recently, a carbapenemase-producing
311 *Salmonella* sp. isolated from a domestic cat in Australia was shown to contain *bla*$_{IMP-4}$ within an
312 IncHI2 MDR plasmid (pIMP4-SEM1) [43]. Remarkably, we found that pIMP4-SEM1 was near
313 identical to pMS7884A (Figure S5). This finding highlights the role of domestic animals (or the
314 food they eat) as a reservoir for antibiotic resistance genes.
315
316 Analysis of several CPE in this study suggested that a common plasmid or integron carrying
317 multiple antibiotic resistance genes is likely the major driver of antibiotic resistance dissemination
318 across a broad range of Enterobacteriaceae. In addition to the presence of *bla*$_{IMP-4}$, four resistance
319 genes (*bla*$_{TEM-1b}$, *bla*$_{IMP-4}$, *qnrB*, and *aac(6')-Ib*) carried by these isolates were previously detected
320 by PCR in the majority of 29 IMP-4-producing *E. cloacae* isolates surveyed from Queensland
321 hospitals between June 2009 to March 2014 [13]. Only one of these isolates was ST90, suggesting
322 lateral transfer of these genes to different *Enterobacter* clones in Queensland before 2013.
323
324 There were significant discrepancies between meropenem MICs according to the testing modality
325 used, with the Etest consistently testing as "susceptible/intermediate" (MIC ≤4 mg/L; range 0.5-4
326 mg/L) and Vitek2 as "resistant" (usually with MICs ≥16 mg/L). According to
327 pharmacokinetic/pharmacodynamic (PK/PD) principles, provided the MIC to a carbapenem falls
328 within a susceptible range, the agent may still be effective despite the presence of a carbapenemase
329 [44]. Robust clinical data to help guide therapy are lacking and many clinicians rely on combination

330 therapy to optimize efficacy against carbapenemase-producers, largely based on observational
331 studies suggesting benefit [45, 46]. The presence of carbapenemase genes may be missed if clinical
332 breakpoints for carbapenem MICs are used [30], however it can be rapidly ascertained by WGS,
333 without *a priori* assumptions of which genes are likely to be present. A wealth of additional
334 information that may influence clinical decisions can be obtained, such as the presence of other β-
335 lactamases, factors that may regulate resistance gene expression (e.g. IS elements), mutations in
336 outer-membrane proteins, or other known resistance genes.
337

338 **Conclusions**

339 We used WGS to help elucidate genetic relationships between $bla_{\text{IMP-4}}$ carbapenemase-producing *E.*
340 *cloacae* identified from our ICU and Burns facility. Real-time application of this technology
341 revealed an unexpected clonal relationship with a strain isolated from the same unit two years
342 previously. Comparison with other Enterobacteriaceae containing $bla_{\text{IMP-4}}$ isolated from
343 surrounding hospitals revealed its carriage on a broad host range IncHI2 plasmid, assumed to be
344 circulating via lateral gene transfer across different *E. cloacae* clones and also *E. coli*. SMRT
345 sequencing enabled the genetic context of all resistance genes within this plasmid to be resolved
346 and revealed the mechanism of loss of resistance genes in one *E. cloacae* strain that reverted to a
347 fully carbapenem-susceptible phenotype. As WGS technologies become increasingly available,
348 they are likely to prove an essential tool for the clinical microbiology laboratory to respond to
349 emergent infection control threats, and can be used in real-time to provide clinically meaningful
350 information.
351

352 **References:**

353

354 1. Paterson DL, Bonomo RA. Extended-spectrum beta-lactamases: a clinical update. Clin
355 Microbiol Rev **2005**; 18(4): 657-86.
356 2. Gupta N, Limbago BM, Patel JB, Kallen AJ. Carbapenem-resistant Enterobacteriaceae:
357 epidemiology and prevention. Clin Infect Dis **2011**; 53(1): 60-7.
358 3. Sader HS, Biedenbach DJ, Jones RN. Global patterns of susceptibility for 21 commonly
359 utilized antimicrobial agents tested against 48,440 Enterobacteriaceae in the SENTRY
360 Antimicrobial Surveillance Program (1997-2001). Diagn Microbiol Infect Dis **2003**; 47(1):
361 361-4.
362 4. World Health Organisation. Antimicrobial Resistance Global Report on surveillance.
363 Geneva: WHO, **2014**.
364 5. Akova M, Daikos GL, Tzouvelekis L, Carmeli Y. Interventional strategies and current
365 clinical experience with carbapenemase-producing Gram-negative bacteria. Clin Microbiol
366 Infect **2012**; 18(5): 439-48.
367 6. Liu YY, Wang Y, Walsh TR, et al. Emergence of plasmid-mediated colistin resistance
368 mechanism MCR-1 in animals and human beings in China: a microbiological and molecular
369 biological study. Lancet Infect Dis **2015**.
370 7. Nordmann P, Poirel L. The difficult-to-control spread of carbapenemase producers among
371 Enterobacteriaceae worldwide. Clin Microbiol Infect **2014**; 20(9): 821-30.
372 8. Magiorakos AP, Srinivasan A, Carey RB, et al. Multidrug-resistant, extensively drug-
373 resistant and pandrug-resistant bacteria: an international expert proposal for interim standard
374 definitions for acquired resistance. Clin Microbiol Infect **2012**; 18(3): 268-81.
375 9. Turnidge J, Gottlieb, T., Bell, J. Enterobacteriaceae Sepsis Outcome Programme (EnSOP):
376 2013 Antimicrobial Susceptibility Report. Available at:
377 http://www.agargroup.org/publications. Accessed June 2016.

378 10. Partridge SR, Ginn AN, Wiklendt AM, et al. Emergence of blaKPC carbapenemase genes in
379 Australia. Int J Antimicrob Agents **2015**; 45(2): 130-6.
380 11. Wailan AM, Paterson DL, Kennedy K, Ingram PR, Bursle E, Sidjabat HE. Genomic
381 Characteristics of NDM-Producing Enterobacteriaceae Isolates in Australia and Their
382 blaNDM Genetic Contexts. Antimicrob Agents Chemother **2015**; 60(1): 136-41.
383 12. Chang LW, Buising KL, Jeremiah CJ, et al. Managing a nosocomial outbreak of
384 carbapenem-resistant Klebsiella pneumoniae: an early Australian hospital experience. Intern
385 Med J **2015**; 45(10): 1037-43.
386 13. Sidjabat HE, Townell N, Nimmo GR, et al. Dominance of IMP-4-producing enterobacter
387 cloacae among carbapenemase-producing Enterobacteriaceae in Australia. Antimicrob
388 Agents Chemother **2015**; 59(7): 4059-66.
389 14. Leung GH, Gray TJ, Cheong EY, Haertsch P, Gottlieb T. Persistence of related bla-IMP-4
390 metallo-beta-lactamase producing Enterobacteriaceae from clinical and environmental
391 specimens within a burns unit in Australia - a six-year retrospective study. Antimicrob
392 Resist Infect Control **2013**; 2(1): 35.
393 15. Peleg AY, Franklin C, Bell JM, Spelman DW. Dissemination of the metallo-beta-lactamase
394 gene blaIMP-4 among gram-negative pathogens in a clinical setting in Australia. Clin Infect
395 Dis **2005**; 41(11): 1549-56.
396 16. Herbert S, Halvorsen DS, Leong T, Franklin C, Harrington G, Spelman D. Large outbreak
397 of infection and colonization with gram-negative pathogens carrying the metallo- beta -
398 lactamase gene blaIMP-4 at a 320-bed tertiary hospital in Australia. Infect Control Hosp
399 Epidemiol **2007**; 28(1): 98-101.
400 17. Carter I. Metallo β Lactamases Gene blaimp, blaspm and blavim Detection by Multiplex
401 Real-Time TaqMan Assay on the Smartcycler. In: Schuller M, Sloots PT, James SG,
402 Halliday LC, Carter WJI. PCR for Clinical Microbiology: An Australian and International
403 Perspective. Dordrecht: Springer Netherlands, **2010**:423-7.

404 18. Bankevich A, Nurk S, Antipov D, et al. SPAdes: A New Genome Assembly Algorithm and
405 Its Applications to Single-Cell Sequencing. Journal of Computational Biology **2012**; 19(5):
406 455-77.
407 19. Gurevich A, Saveliev V, Vyahhi N, Tesler G. QUAST: quality assessment tool for genome
408 assemblies. Bioinformatics **2013**; 29(8): 1072-5.
409 20. David M, Dzamba M, Lister D, Ilie L, Brudno M. SHRiMP2: Sensitive yet Practical Short
410 Read Mapping. Bioinformatics **2011**; 27(7): 1011-2.
411 21. Victorian-Bioinformatics-Consortium. Nesoni. Available at: https://github.com/Victorian-
412 Bioinformatics-Consortium/nesoni. Accessed June 2016.
413 22. Stamatakis A. RAxML version 8: a tool for phylogenetic analysis and post-analysis of large
414 phylogenies. Bioinformatics **2014**; 30(9): 1312-3.
415 23. Treangen TJ, Ondov BD, Koren S, Phillippy AM. The Harvest suite for rapid core-genome
416 alignment and visualization of thousands of intraspecific microbial genomes. Genome
417 Biology **2014**; 15(11): 1-15.
418 24. Inouye M, Dashnow H, Raven LA, et al. SRST2: Rapid genomic surveillance for public
419 health and hospital microbiology labs. Genome Med **2014**; 6(11): 90.
420 25. Compain F, Poisson A, Le Hello S, et al. Targeting relaxase genes for classification of the
421 predominant plasmids in Enterobacteriaceae. Int J Med Microbiol **2014**; 304(3-4): 236-42.
422 26. Zankari E, Hasman H, Cosentino S, et al. Identification of acquired antimicrobial resistance
423 genes. Journal of Antimicrobial Chemotherapy **2012**; 67(11): 2640-4.
424 27. Gupta SK, Padmanabhan BR, Diene SM, et al. ARG-ANNOT, a new bioinformatic tool to
425 discover antibiotic resistance genes in bacterial genomes. Antimicrob Agents Chemother
426 **2014**; 58(1): 212-20.
427 28. Li H, Durbin R. Fast and accurate short read alignment with Burrows-Wheeler transform.
428 Bioinformatics **2009**; 25(14): 1754-60.

429 29. European Committee on Antimicrobial Susceptibility Testing. Breakpoint tables for
430 interpretation of MICs and zone diameters version 6.0. Available at: http://www.eucast.org.
431 Accessed June 2016.
432 30. European Committee on Antimicrobial Susceptibility Testing. EUCAST guidelines for
433 detection of resistance mechanisms and specific resistances of clinical and/or
434 epidemiological importance. Available at: http://www.eucast.org/resistance_mechanisms/.
435 Accessed June 2016.
436 31. Sidjabat HE, Heney C, George NM, Nimmo GR, Paterson DL. Interspecies transfer of
437 blaIMP-4 in a patient with prolonged colonization by IMP-4-producing Enterobacteriaceae.
438 J Clin Microbiol **2014**; 52(10): 3816-8.
439 32. Kanamori H, Parobek CM, Weber DJ, et al. Next-Generation Sequencing and Comparative
440 Analysis of Sequential Outbreaks Caused by Multidrug-Resistant Acinetobacter baumannii
441 at a Large Academic Burn Center. Antimicrob Agents Chemother **2015**; 60(3): 1249-57.
442 33. Koser CU, Holden MT, Ellington MJ, et al. Rapid whole-genome sequencing for
443 investigation of a neonatal MRSA outbreak. N Engl J Med **2012**; 366(24): 2267-75.
444 34. Stoesser N, Sheppard AE, Shakya M, et al. Dynamics of MDR Enterobacter cloacae
445 outbreaks in a neonatal unit in Nepal: insights using wider sampling frames and next-
446 generation sequencing. J Antimicrob Chemother **2015**; 70(4): 1008-15.
447 35. Howden BP, Holt KE, Lam MM, et al. Genomic insights to control the emergence of
448 vancomycin-resistant enterococci. MBio **2013**; 4(4).
449 36. Friedman ND, Pollard J, Stupart D, et al. Prevalence of Clostridium difficile colonization
450 among healthcare workers. BMC Infectious Diseases **2013**; 13(1): 459.
451 37. Dulon M, Peters C, Schablon A, Nienhaus A. MRSA carriage among healthcare workers in
452 non-outbreak settings in Europe and the United States: a systematic review. BMC Infectious
453 Diseases **2014**; 14(1): 363.

454 38. Lubbert C, Lippmann N, Busch T, et al. Long-term carriage of Klebsiella pneumoniae
455 carbapenemase-2-producing K pneumoniae after a large single-center outbreak in Germany.
456 Am J Infect Control **2014**; 42(4): 376-80.
457 39. Quiroga MP, Andres P, Petroni A, et al. Complex Class 1 Integrons with Diverse Variable
458 Regions, Including aac(6′)-Ib-cr, and a Novel Allele, qnrB10, Associated with ISCR1 in
459 Clinical Enterobacterial Isolates from Argentina. Antimicrobial Agents and Chemotherapy
460 **2007**; 51(12): 4466-70.
461 40. Wang M, Tran JH, Jacoby GA, Zhang Y, Wang F, Hooper DC. Plasmid-Mediated
462 Quinolone Resistance in Clinical Isolates of Escherichia coli from Shanghai, China.
463 Antimicrobial Agents and Chemotherapy **2003**; 47(7): 2242-8.
464 41. Ho P-L, Lo W-U, Chan J, et al. pIMP-PH114 Carrying bla IMP-4 in a Klebsiella
465 pneumoniae Strain is Closely Related to Other Multidrug-Resistant IncA/C2 Plasmids.
466 Current Microbiology **2014**; 68(2): 227-32.
467 42. Roy Chowdhury P, Ingold A, Vanegas N, et al. Dissemination of Multiple Drug Resistance
468 Genes by Class 1 Integrons in Klebsiella pneumoniae Isolates from Four Countries: a
469 Comparative Study. Antimicrobial Agents and Chemotherapy **2011**; 55(7): 3140-9.
470 43. Abraham S, O'Dea M, Trott DJ, et al. Isolation and plasmid characterization of
471 carbapenemase (IMP-4) producing Salmonella enterica Typhimurium from cats. Scientific
472 Reports **2016**; 6: 35527.
473 44. Morrill HJ, Pogue JM, Kaye KS, LaPlante KL. Treatment Options for Carbapenem-
474 Resistant Enterobacteriaceae Infections. Open Forum Infect Dis **2015**; 2(2): ofv050.
475 45. Tumbarello M, Viale P, Viscoli C, et al. Predictors of mortality in bloodstream infections
476 caused by Klebsiella pneumoniae carbapenemase-producing K. pneumoniae: importance of
477 combination therapy. Clin Infect Dis **2012**; 55(7): 943-50.

478 46. Daikos GL, Tsaousi S, Tzouvelekis LS, et al. Carbapenemase-producing Klebsiella
479 pneumoniae bloodstream infections: lowering mortality by antibiotic combination schemes
480 and the role of carbapenems. Antimicrob Agents Chemother **2014**; 58(4): 2322-8.
481
482

483 **Table 1: Antibiotic Resistance Profile as determined by Etest, Vitek2 and ResFinder**

Patient			1		2				3			
Strain			7884	7885	7886	7887	7888	7889	7890	7891	7892	7893
Source			ETT	urine	ETT	urine	blood	urine	ETT	blood	Leg swab	blood
ST			90	90	90	90	90	90	90	90	90	90
Plasmid			IncHI2	IncHI2	IncHI2	IncHI2	IncHI2	IncHI2	IncHI2	IncHI2	IncHI2	IncHI2
MIC(mg/L) by E-test		Ertapenem	1	2	4	2	0.5	0.032	2	0.5	0.5	2
		Imipenem	2	1	4	8	1	0.5	2	1	1	4
		Meropenem	0.5	1	4	2	0.5	0.032	2	1	0.5	0.5
β-lactams and Cephalosporins	Vitek2[1]	Tim	≥128	≥128	≥128	≥128	≥128	32	≥128	≥128	≥128	≥128
		Mer	≥16	≥16	≥16	≥16	≥16	≤0.25	≥16	≥16	≥16	≥16
		Taz	16	16	16	16	16	8	16	16	16	16
		Fox	≥64	≥64	≥64	≥64	≥64	≥64	≥64	≥64	≥64	≥64
		Caz	≥64	≥64	≥64	≥64	≥64	≤1	≥64	≥64	≥64	≥64
		Cro	16	16	16	16	16	≤1	16	16	16	8
		Fep	2	2	4	2	2	≤1	2	2	2	4
	Res	*ampC*	+	+	+	+	+	+	+	+	+	+
		bla_{OXA-1}	+	+	+	+	+	-	+	+	+	+
		bla_{IMP-4}	+	+	+	+	+	-	+	+	+	+
		bla_{TEM-1B}	+	+	+	+	+	+	+	+	+	+
Aminoglycosides	Vitek2	Ami	≤2	≤2	≤2	≤2	≤2	8	≤2	≤2	≤2	≤2
		Gent	≥16	≥16	≥16	≥16	≥16	≤1	≥16	≥16	≥16	≥16
		Tob	8	8	8	8	8	≥16	8	8	8	8
	Res	*strB*	+	+	+	+	+	+	+	+	+	+
		strA	+	+	+	+	+	+	+	+	+	+
		aac(6')Ib-cr	+	+	+	+	+	+	+	+	+	+
		aac(3)-IId	+	+	+	+	+	-	+	+	+	+
Quinolones	Vitek2	Cip	≤0.25	0.5	≤0.25	≤0.25	0.5	≤0.25	0.5	0.5	1	≤0.25
		Nor	2	2	2	2	2	0.5	2	2	2	1
	Res	*qnrB2*	+	+	+	+	+	-	+	+	+	+
Sulphonamide/ Trimethoprim	Vitek2	Tmp/smx	≥320	≥320	≥320	≥320	≥320	≥320	≥320	≥320	≥320	≥320
	Res	*sulI*	+	+	+	+	+	+	+	+	+	+
		dfrA18	+	+	+	+	+	+	+	+	+	+
Rifampicin	Res	*arr3*	+	+	+	+	+	-	+	+	+	+
Macrolide	Res	*mph(A)*	+	+	+	+	+	-	+	+	+	+
Phenicols	Res	*catA2*	+	+	+	+	+	+	+	+	+	+
		catB3	+	+	+	+	+	+	+	+	+	+
Tetracycline	Res	*tet(D)*	+	+	+	+	+	+	+	+	+	+

484

485 [1]Res = ResFinder Antimicrobial Resistance gene database; Vitek = Vitek2 automated susceptibility

486 MIC (mg/L): Tim=ticarcillin-clavulanate, Taz=piperacillin-tazobactam, Fox=cefoxitin,

487 Caz=ceftazidime, Cro=ceftriaxone, Fep=cefepime, Mer=meropenem, Ami=amikacin,

488 Gent=gentamicin, Tob=tobramycin, Cip=ciprofloxacin, Nor=norfloxacin, Tmp/smx=trimethoprim-

489 sulphamethoxazole

490 **Figure Legends:**

491 **Figure 1: RBWH clinical case study outline**: Three burns patients were admitted to the RBWH
492 ICU ward in mid 2015. Patient 1 (Female, 43-years-old) and Patient 2 (Female, 58-years-old) were
493 admitted on the same day. Subsequent to admission, both patients developed carbapenem-resistant
494 *E. cloacae* infections, with two samples taken from patient 1 (source = ETT [purple] and urine
495 [grey]), and 4 samples taken from patient 2 (source = ETT [purple], urine [grey], and blood [red]).
496 Patient 3 (Female, 39-years-old) was admitted 37 days after the patient 1 and 2 had been admitted
497 and after they had been discharged from the ICU. Patient 3 also developed infection due to a
498 carbapenem-resistant *E. cloacae* infection, and had 4 samples taken from ETT (purple), blood (red)
499 and wound sites (orange). After intensive antibiotic and antifungal treatment, the patient was
500 palliated on day 47 of ICU admission. Sequencing and genomics analysis of all 10 isolates was
501 undertaken following confirmation of all three patients being infected with $bla_{\text{IMP-4}}$-producing *E.*
502 *cloacae* (period shown in purple shading). Environmental swabbing was undertaken 65 days after
503 the initial admission of patient 1 and 2, and 29 days after the admission of patient 3 (orange square).
504

505 **Figure 2: CRE isolate timeline and relationship matrix: A.** 10 isolates were collected from 3
506 patients at various time-points in mid 2015. Coloured blocks indicate the source of the isolated
507 strain: purple: respiratory, grey: urine, red: blood, and orange: wound. **B.** Relationship matrix (left)
508 shows specific core single nucleotide variant (SNV) differences identified between strains. Strains
509 within the same circle have identical core SNV profiles. Lines connecting circles represent
510 accumulating SNV differences between strains (not-to-scale), where each line represents one SNV
511 (including nucleotide deletion). Specific nucleotide differences between isolates are given in the
512 table in panel B. Locations and consequences of nucleotide change are shown in Supplementary
513 Dataset S1. All 11 isolates differed by 5 SNVs overall.
514

515 **Figure 3: Core SNP Maximum likelihood (ML) tree of Hospital A and B *E. cloacae* isolates in**
516 **relation to RBWH isolates:** Trimmed reads from 6 *E. cloacae* isolates (Hospital A and B) were
517 aligned to the reference *E. cloacae* Ecl1 (isolated in 2013 at the RBWH) to determine core single
518 nucleotide polymorphisms (SNPs) between all isolates. Ecl1 in this figure represents all 2015
519 RBWH isolates (n=10) as they were found to be near identical at the core genome level. 63,861
520 core SNPs were identified and used to generate a ML tree with RAxML (1000 bootstrap replicates),
521 which determined no relationship between the RBWH isolates (pink) and the Hospital B
522 (blue)/Hospital A (orange) isolates. Four closely related strains were identified from Hospitals A
523 and B (red box). Alignment of trimmed reads from MS8077, MS8079 and MS7926 to MS7924
524 identified 117 core SNPs, however, a number of these SNPs were removed as they were identified
525 as residing within transposon or phage regions. The remaining 58 core SNPs were used to generate
526 a ML tree (1000 bootstrap replicates), showing that Hospital B strains differ by less than 20 SNPs.
527
528 **Figure 4: Large IncHI2 plasmid with ~55 kb multidrug resistance region containing IMP-4**
529 **carbapenemase: A.** A 330,060 bp IncHI2 plasmid carrying multiple resistance operons, including a
530 large ~55 kb multidrug resistance (MDR) region, was fully recovered and assembled using Pacific
531 Biosciences (PacBio) SMRT sequencing of strain MS7884 (patient 1, isolate 1). The multidrug
532 resistance region was found to contain two class 1 integrons (In809, In37) along with several other
533 antibiotic resistance genes, as indicated. Comparison of this MDR region to publicly available
534 genomes found a close match to pEl1573, isolated in 2012 from an *E. cloacae* isolate in Sydney,
535 Australia. **B.** A predicted model of homologous recombination between two *aac(6')-Ib* (aac6) genes
536 (red asterisks) within the ~55 kb MDR region in MS7889 (patient 2, isolate 4, IMP-, carbapenem-
537 susceptible) leading to the loss of a ~34 kb region containing $bla_{\text{IMP-4}}$ as well as several other
538 antibiotic resistance genes.
539

Figure 1

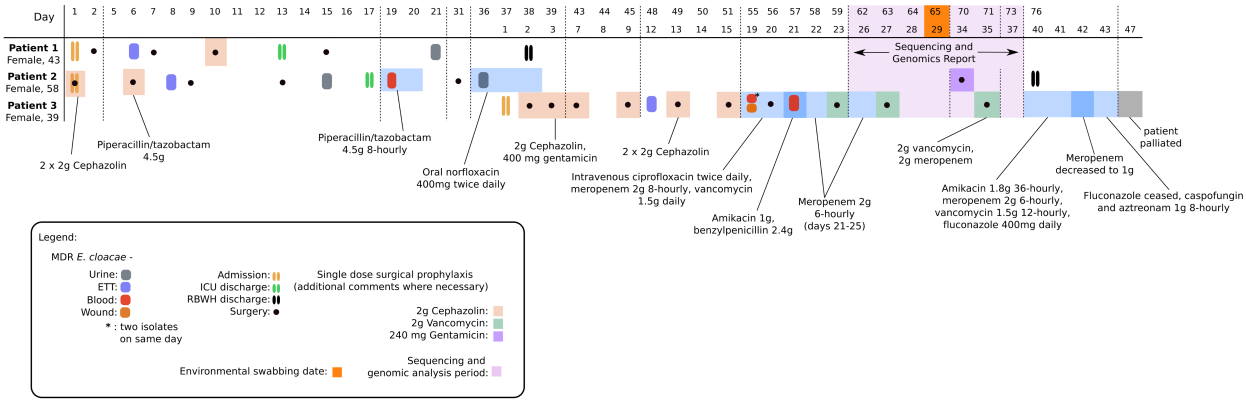
Day
Patient 1
Female, 43
Patient 2
Female, 58
Patient 3
Female, 39
Sequencing and Genomics Report
2 x 2g Cephazolin
Piperacillin/tazobactam 4.5g
Piperacillin/tazobactam 4.5g 8-hourly
Oral norfloxacin 400mg twice daily
2g Cephazolin, 400 mg gentamicin
2 x 2g Cephazolin
Intravenous ciprofloxacin twice daily, meropenem 2g 8-hourly, vancomycin 1.5g daily
Amikacin 1g, benzylpenicillin 2.4g
Meropenem 2g 6-hourly (days 21-25)
2g vancomycin, 2g meropenem
Amikacin 1.8g 36-hourly, meropenem 2g 6-hourly, vancomycin 1.5g 12-hourly, fluconazole 400mg daily
Meropenem decreased to 1g
Fluconazole ceased, caspofungin and aztreonam 1g 8-hourly
patient palliated
Legend:
MDR E. cloacae -
Urine:
ETT:
Blood:
Wound:
* : two isolates on same day
Admission:
ICU discharge:
RBWH discharge:
Surgery:
Single dose surgical prophylaxis (additional comments where necessary)
2g Cephazolin:
2g Vancomycin:
240 mg Gentamicin:
Environmental swabbing date:
Sequencing and genomic analysis period:

Figure 2

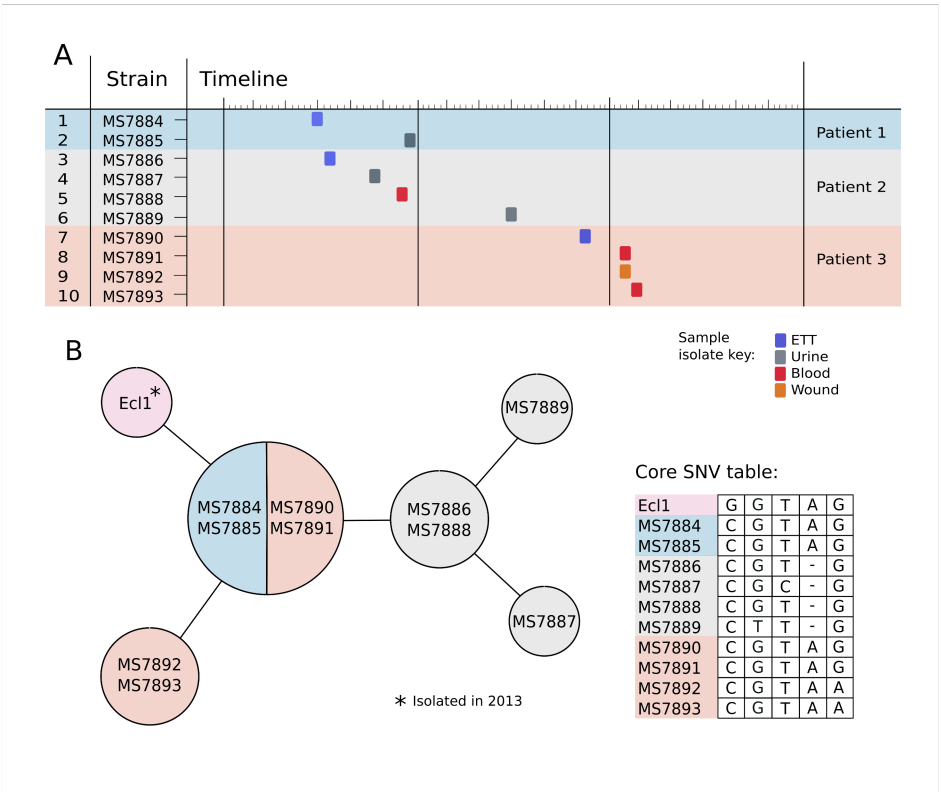

Ecl1	G	G	T	A	G
MS7884	C	G	T	A	G
MS7885	C	G	T	A	G
MS7886	C	G	T	-	G
MS7887	C	G	C	-	G
MS7888	C	G	T	-	G
MS7889	C	T	T	-	G
MS7890	C	G	T	A	G
MS7891	C	G	T	A	G
MS7892	C	G	T	A	A
MS7893	C	G	T	A	A

Figure 3

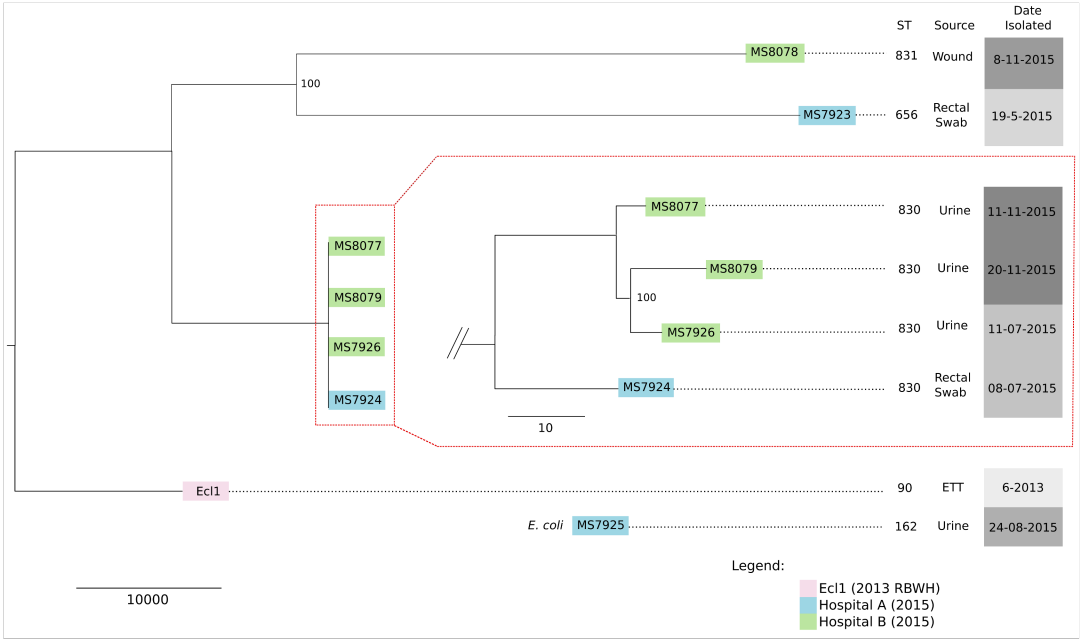
ST
Source
Date Isolated
MS8078
831
Wound
8-11-2015
100
MS7923
656
Rectal Swab
19-5-2015
MS8077
MS8079
MS7926
MS7924
MS8077
830
Urine
11-11-2015
MS8079
830
Urine
20-11-2015
100
MS7926
830
Urine
11-07-2015
MS7924
830
Rectal Swab
08-07-2015
10
Ecl1
90
ETT
6-2013
E. coli
MS7925
162
Urine
24-08-2015
10000
Legend:
Ecl1 (2013 RBWH)
Hospital A (2015)
Hospital B (2015)

549 **Figure 4**

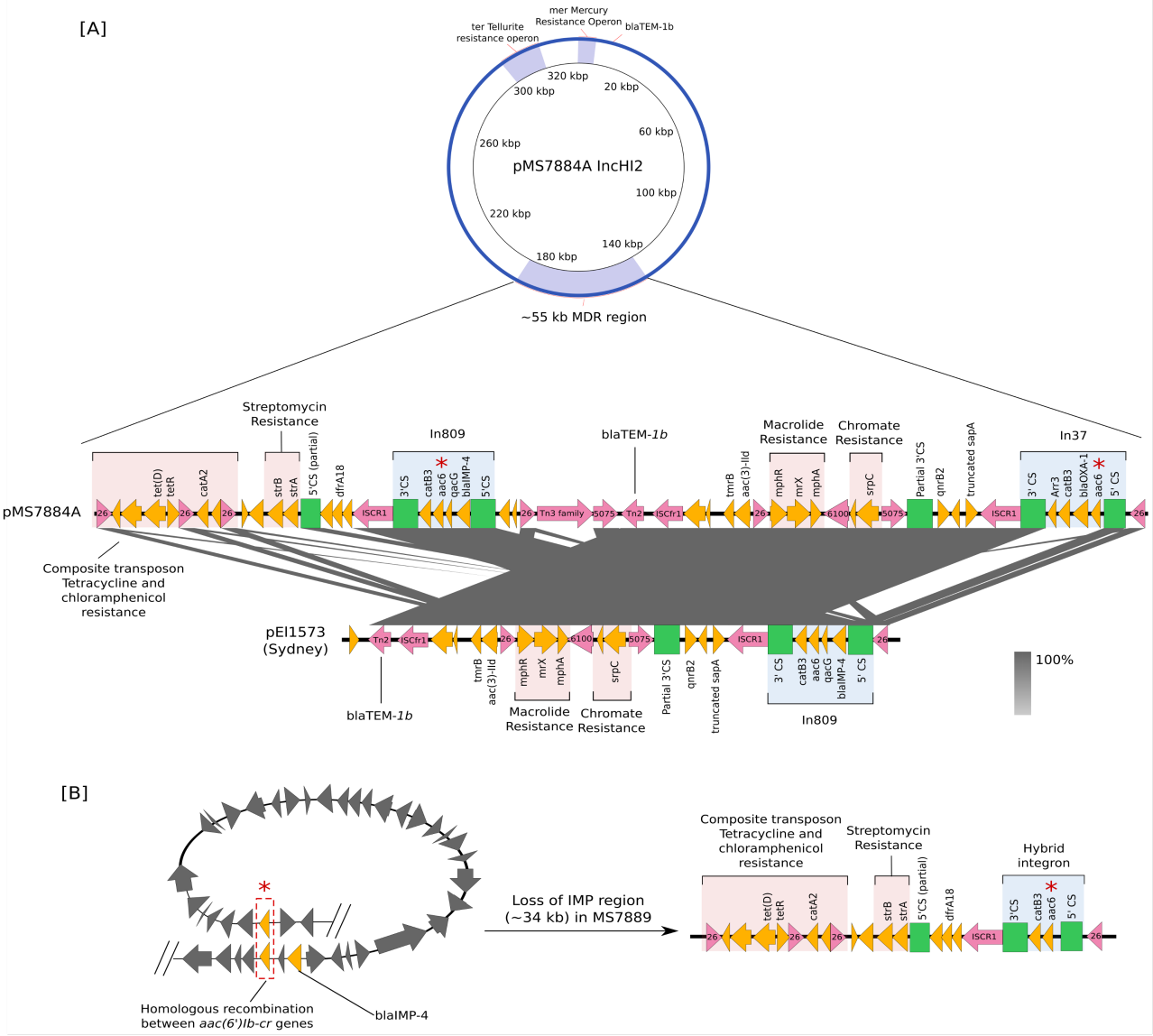

550