The hippocampus and dorso-lateral striatum link distinct types of memories through time and space, respectively

Abbreviated title: Striatal-hippocampal interactions in memory-based behavior

Janina Ferbinteanu

Dept. of Physiology and Pharmacology
Dept. of Neurology
SUNY Downstate Medical Center
450 Clarkson Ave
Brooklyn, NY 11203

Corresponding Author: **Janina Ferbinteanu**

Phone: 718-270-1796
Email:janina.ferbinteanu@downstate.edu; ferbinteanu@gmail.com

The author does not have any conflict of interest.

ACKNOWLEDGEMENTS

I thank Kasey Stern for her work on this project during her 2019 summer internship in my lab and Dr. Frank Barone for access to equipment in his lab. I would also like to acknowledge Drs. Robert McDonald, Bryan Devan, Mark Packard, Jarid Goodman, and Norman White for useful comments on previous versions of the manuscript. This work has been supported by NIH grant MH115421.

Keywords: hippocampus; striatum; cognitive memory; habits; functional principles of memory circuits, memory integration

ABSTRACT

Different kinds of memories result from the activity of distinct neural networks. In particular, memory for facts and events, known as episodic memory, depends on the integrity of the hippocampus (HPC) while habits involve a part of the basal ganglia known as the putamen in humans and dorso-lateral striatum (DSL) in rodents [1,2]. Some of the strongest empirical evidence supporting this view indicates that HPC lesions impair spatial navigation, but leave intact stimulus-response (S-R) behaviors, while DSL lesions result in the opposite pattern of results. This dissociation was recently shown however to be dependent on past experience [3 4], as it does not occur when animals acquire spatial and response memories concurrently in the same environment. The current work revealed that time and space play distinct and largely complementary roles in linking different types of memories within the HPC and DSL networks. When rats learned spatial navigation and cue response concurrently but in two different contexts, HPC lesions impaired performance in both tasks while DSL lesions affected only cue response. In contrast, when a different group of rats learned the same tasks in one context but during different days, HPC affected spatial navigation only while DSL lesions impaired performance in both tasks. Lesions of the medial striatum (DSM) impaired performance in both tasks regardless of training conditions, indicating that the processes HPC and DSL networks undergo to link distinct memories are specific to these local networks. Comparison of lesion effects across experimental groups and task performance showed that normal spatial and response behaviors can have highly different underpinnings depending upon past experience. These results reveal that based on time and space, different types of memories can be integrated within specific memory networks.

INTRODUCTION

The multiple memory systems theory postulates that different types of memories result from the activity of distinct brain circuits with different properties and dynamics. The operational principle of the memory systems is considered to be independent parallelism, meaning that although information flows through all memory networks at the same time, processing within a given system occurs autonomously (e.g., [5–7] [2]). The empirical basis of this principle is constituted by experiments in both animals and humans that have demonstrated double (or even triple) dissociations between brain structures and their contributions to behavior. The basic pattern of results in such work is that damage to one circumscribed memory circuit causes deficits in one of two behavioral tasks, with each task testing a distinct type of memory, while damage to a different memory circuit results in the opposite pattern. Based on numerous experiments of this kind, it is currently well established that memory for facts and events (declarative memory), which includes spatial representations, is selectively dependent on a neural network centered on the HPC [7–13], while habits, which include stimulus-response (S-R) associations, require an intact DSL [6,14–21]. Although distinct in nature and supported by different neural networks, spatial and response learning can occur simultaneously and in parallel [17,22] and can exert concomitant influence on behavioral output, while also directly influencing each other's ability to guide behavior [23,24].

Recent data however have shown that HPC and DSL can each support memories generally thought to be independent of these structures [3,4,25]. In one of these studies[4], when rats concurrently learned a spatial navigation and a cue response task on the plus maze in the same context (understood here as the environment within which the animal behaves), lesions of the HPC and DSL no longer resulted in the expected double dissociation, still demonstrated if different groups of animals learned either of the two tasks alone. Instead, HPC and DSL lesions each impaired both spatial and response memory. Lesions of the DSM, a structure thought to be involved in flexible behavior or behavior based on action outcome associations [26–29], also impaired performance in both task but in this case the impairment occurred regardless of training parameters. These findings indicate that when spatial and response learning occur concurrently and in the same context, HPC and DSL can be involved in behavior incongruous with their otherwise known functions. Thus, the neural representations that presumably support the

distinct types of behavioral strategies can become linked through the functional coupling of their neurobiological bases, the process providing an avenue through which memories of different kinds can be integrated.

To further explore this phenomenon, the current experiment evaluated the memory deficits caused by HPC, DSL and DSM lesions when spatial and response learning were separated either in space but not time; or in time but not space (Fig. 1). Specifically, one group of rats was trained concurrently in spatial navigation and cue response tasks, but each task was learned in a dedicated context (a condition referred to below as 2Contexts); this training protocol separated the two kinds of learning in space but not time. A second group of rats learned the same tasks, but the training occurred in the same environment with learning in each task distributed across days (a condition referred to below as 2Days); this training protocol separated the two kinds of learning in time but not space. After reaching a set performance criterion in both tasks (20% or less error for both tasks during two consecutive training sessions), animals received selective HPC, DSL, DSM or sham lesions and were subsequently tested for retention following the same protocol as during training. Because rats trained in S-R tasks should be able to detect changes in context [30], the animals' ability to associate each task with the environment in which it took place was also tested in the 2Contexts condition. Only data from animals with complete and selective lesions of the intended target areas were included for final analysis (Extended Data Figs. 1 and 2). One possibility is that the absence of dissociation between the HPC and DSL lesion effects obtained when animals engage in different types of learning concurrently in one environment is due to a nonspecific process that results in the functional coupling of the two networks. If so, then separating the learning experiences in either time or space would presumably reverse the coupling and the behavioral contributions of the two memory structures would shift towards the classical double dissociation present when the animals learn only one task at a time. The current results however did not validate this prediction. Instead, they revealed that HPC and DSL linked the two types of memories through distinct, and to a large extent, complementary processes, one involving time and the other involving space, respectively.

DSL, but not HPC, supported spatial and response memories when rats learned the two tasks in the same environment across different days.

To clarify the nature of the factors that promote DSL involvement in a flexible behavior such as spatial navigation, rats with DSL lesions were tested in two distinct conditions, one in which they had formed spatial and response memories concurrently but in different environments, and one in which similar types of memories had been acquired in the same environment while the learning processes were spread apart across different days. The data indicated a significant spatial impairment relative to controls in the DSL lesion group throughout the 5 days of testing only when learning occurred in the same context across different days (day 1post: $t_{93.3} = 4.18$, $p < 0.0001$; day 2post: $t_{93.3} = 5.87$, $p < 0.0001$; day 3post: $t_{93.3} = 5.56$, $p < 0.0001$; day 4post: $t_{93.3} = 5.31$, $p < 0.0001$; day 3post: $t_{93.3} = 4.39$, $p < 0.0001$); when the rats learned the two tasks in different contexts DSL group was no different than controls (Fig. 2A, left). A direct comparison of spatial navigation data highlighted the difference in spatial performance of animals with similar DSL lesions across the two training conditions (Fig. 2B, upper left panel). The effect of training condition was highly significant overall ($F_{(1, 47.9)} = 84.14$, $p < .00001$) and training x day interaction was marginally so ($F_{(3, 38.6)} = 2.63$, $p = 0.0634$). At the same time, as expected, DSL lesions impaired response memory regardless of training procedure (Fig. 2A, right). Thus, while DSL supports a rigid cue-response type of association in general, it is also able to use the context within which learning occurs to additionally become involved in a behavior necessitating flexible use of stored information. This property of the DSL network may be involved in drug relapse, whereby exposure to an environment previously associated with drug abuse leads to renewed drug consumption. Current data do not clarify whether DSL formed its own context representation, it accessed the context representation formed by the HPC directly, or it accessed the HPC context representation at the level of control over the motor output. The results of the reversal test in the 2Contexts condition suggested that context representations are selectively dependent on the HPC. Specifically, rats with HPC lesions did not respond with a change in performance to context-task reversal test as did normal animals, who performed worse during the reversal test in the spatial task ($t_{25} = 2.44$, $p = 0.022$) marginally worse in the cue task ($t_{25} = 1.82$, $p = 0.0802$). In comparison the DSL lesion group was significantly worse in the cue task ($t_{25} = 2.44$, $p = 0.0022$), but not in the spatial task ($t_{25} = 1.0$, $p = 0.3259$) while the DSM lesion group was no different on the spatial task, but performed significantly better on the cue response task ($t_{25} = 1.6$, $p = 0.1212$). However, reports that context memories become HPC independent if HPC is inactivated during learning [31 32] and that DSL

can be involved in context memories [33] imply that along with the HPC, DSL may also form a context representation that presumably could be used to guide behavior.

HPC, but not DSL, supported behavioral performance in both tasks when rats learned the two tasks concurrently in different environments.

Animals with HPC lesions were trained and tested alongside animals with DSL lesions in the 2Contexts and 2Days conditions. In this case, the focus of the inquiry was to determine the nature of the factors promoting HPC involvement in response memory, an inflexible type of representation considered to guide cue response behavior. The performance of the HPC group on the cue response task showed a pattern of impairment largely complementary to the one described above for animals with DSL lesions on the spatial task (Fig. 2A). Specifically, when the rats formed spatial and response memories concurrently but in distinct environments, HPC animals were consistently impaired relative to controls (day 1post: $t_{84.1} = 6.84$, $p < 0.0001$; day 2post: $t_{84.1} = 6.98$, $p < 0.0001$; day 3post: $t_{84.1} = 4.97$, $p < 0.0001$ and day 4post: $t_{84.1} = 5.25$, $p < 0.0001$). In contrast, when spatial and response memories were acquired in the same environment across different days, the HPC group was significantly impaired only on the first day of retention testing ($t_{130} = 4.32$, $p < 0.0001$). On the last retention test, the control rats performed marginally better ($t_{130} = 1.9$, $p = 0.0592$), but the difference was due to high proficiency in normal animals after extensive training rather than to impairment in the HPC group, who performed well below the 20% or better criterion. Directly comparing cue response performance in animals with HPC lesions that underwent different training procedures underscored the large differences in the behavior of these two groups (Fig. 2B, second row right). Overall, training method caused highly significant differences in performance ($F_{(1, 60)} = 114.55$, $p < 0.0001$) and the performance of the two groups varied overall across days ($F_{(3, 48.7)} = 13.72$, $p < 0.0001$). In contrast with the selective effect on cue response performance, HPC lesions consistently impaired spatial navigation (Fig. 2B, second row left). Thus, HPC is critical for spatial representations in general, but it can additionally support response memories if they are formed close in time to spatial memories.

HPC did not consistently link spatial and response memories acquired in the same space

As a group, HPC lesioned animals showed a memory deficit on the first day of cue response testing after acquiring spatial and response memories in the same context, raising the possibility that similar to DSL, HPC can also link memories based on space. However, a closer look at the results does not support this idea. First, the HPC group had a deficit in response memory only during the first day of retention testing, while the DSL group was severely impaired on spatial navigation throughout (Fig. 2B, compare the 2Days data in top row left and second row right panels, blue highlights). Second, even during the first day of retention the behavior of HPC animals was heterogenous, with 5 out of 8 animals performing close to criterion level (individual data: 18%, 22%, 22%, 22%, 23%, 36%, 44%, and 47% error, respectively). In contrast, the corresponding data in the 2Contexts condition shows that all 7 animals had significant memory deficits (individual data: 49%, 50%, 53%, 56%, 40%, 38% and 28% error, respectively). Thus, on average HPC did not link spatial and response memories acquired in the same space if the initial learning occurred at a distinct times. Even when such a link between memories was formed, it was weak and did not last past the first day of retention testing. The precipitous drop in error rate to normal levels of the three HPC animals that showed initial impairment also suggested that the reason behind the performance improvement was that an already formed cue-response association regained control over the motor output. Considered in the context of the results described above, it appears therefore that the HPC linked distinct types of memories if they were acquired closely in time even as the environment changed, but not if the memories were formed in the same space at different points in time. This functional property, complementary to DSL's ability to link memories based on context but not time, dovetails well with the quintessence of episodic memory characteristic, which is remembering as a coherent unit events that occur in close succession regardless of environment, but distinguishing events that happen in the same space at different points in time.

DSM contribution to spatial and response memories was not modulated by either spatial or temporal factors

Although DSL and DSM are both parts of the dorsal striatum, DSM is involved in different aspects of memory-based behavior. Specifically, this area has been linked to flexible [34 26],outcome-directed [28 35],or goal-directed [36] behaviors. The current results were in agreement with this idea, as DSM lesions generally impaired performance regardless of training conditions in both the spatial and response tasks, each of which requires the animals to adapt the body turn at the center of the maze to their start position relative to the goal (comparison to sham group, 2Contexts: spatial navigation: day 1post: $t_{58.5} = 4.07$, $p < 0.0001$; day 2post: $t_{58.5} = 2.79$, $p = 0.0071$; day 3post: $t_{58.5} = 2.57$, $p = 0.0128$; day 4post: $t_{58.5} = 3.1$, $p = 0.003$; cue response: day 1post: $t_{84.1} = 1.54$, $p = 0.128$; day 2post: $t_{84.1} = 4.53$, $p < 0.0001$; day 3post: $t_{84.1} = 3.63$, $p = 0.0005$; day 4post: $t_{84.1} = 3.74$, $p = 0.0003$; 2Days: spatial navigation: day 1post: $t_{93.3} = 5.36$, $p < 0.0001$; day 2post: $t_{93.3} = 1.89$, $p = 0.0621$; day 3post: $t_{93.3} = 1.48$, $p < 0.00=0.1422$; day 4post: $t_{93.3} = 1.43$, $p = 0.1563$; day 5post: $t_{93.3} = 2.04$, $p = 0.044$ and cue response: day 1post: $t_{130} = 4.11$, $p < 0.0001$; day 2post: $t_{130} = 2.88$, $p = 0.0047$; day 3post: $t_{130} = 2.47$, $p = 0.015$; day 4post: $t_{130} = 1.0$, $p = 0.317$; day 5post: $t_{130} = 1.23$, $p = 0.2133$; Fig. 2A). Thus, DSM supported both spatial navigation and motor response to a single cue, but its contribution to these memory-based behaviors was not modulated by either spatial or temporal factors. This finding further supports the idea that the processes through which the DSL and HPC link distinct types of memories are not general in nature but rather specific to each local network.

Training condition modulated the effects of DSL and HPC lesions on the cue response and spatial navigation tasks, respectively

A large body of empirical data links DSL to S-R behavior and HPC to spatial navigation. In agreement with this idea, in the current experiment DSL lesions impaired response performance regardless of training protocol in the early stages of retention testing (2Contexts: day 1post: $t_{84.1} = 4.22$, $p < 0.0001$; day 2post: $t_{84.1} = 4.65$, $p < 0.0001$; 2Days: day 1post: $t_{130} = 3.7$, $p = 0.0003$; day 2post: $t_{130} = 4.52$, $p < 0.0001$; Fig. 2A, right column panels). With extended testing, performance recovered in the 2Context, but not 2Days condition (2Contexts: day 3post: $t_{84.1} = 1.93$, $p = 0.0568$; day 4post: $t_{84.1} = 0.32$, $p =0.7533$; 2Days: day 3post: $t_{130} = 4.79$, $p < 0.0001$; day 4post: $t_{130} = 4.57$, $p < 0.0001$; day 5post: $t_{130} = 4.61$, $p < 0.0001$). HPC lesions on the other hand consistently impaired spatial navigation (2Contexts: day 1post: $t_{58.5} = 5.42$, $p < 0.0001$; day 2post: $t_{58.5} = 4.73$, p

< 0.0001; day 3post: $t_{58.5} = 5.0$, $p < 0.0001$; day 4post $t_{58.5} = 4.31$, $p < 0.0001$; and 2Days: day 1post: $t_{93.3} = 8.12$, $p < 0.0001$; day 2post: $t_{93.3} = 6.6$, $p < 0.0001$; day 3post: $t_{93.3} = 9.15$, $p < 0.0001$; day 4post $t_{93.3} = 8.29$, $p < 0.0001$; day5post $t_{93.3} = 8.37$, $p < 0.0001$; Fig 2A, left column panels). However, for both DSL and HPC lesions, the magnitude of the memory deficit in the cue response and spatial tasks, respectively, was strongly modulated by the training condition (Fig. 2B, top row right and second row left, orange highlights; DSL: $F_{(1, 47.3)} = 4.54$, $p = 0.0383$ and training x day interaction: $F_{(3, 42.3)} = 6.96$, $p = 0.0007$; HPC: $F_{(1, 59.9)} = 9.86$, $p = 0.0026$). Training condition also modulated the performance of DSM lesion groups in both spatial and response tasks (spatial navigation: $F_{(1, 47.9)} = 3.57$, $p = 0.0650$; cue response: $F_{(1, 47.9)} = 5.11$, $p = 0.0283$; Fig. 2b, third row orange highlights). In contrast, training condition did not affect the proficient performance of normal animals (effect of training: spatial navigation: $F_{(1, 42)} = 0.01$, $p = 0.9054$; cue response $F_{(1,42)} = 0.00$, $p = 0.9726$; effect of training x day: spatial navigation: $F_{(3, 42)} = 0.99$, $p = 0.4077$; cue response $F_{(3, 39.5)} = 1.03$, $p = 0.3918$; Fig. 2B, bottom row). This finding prompted the question of how the results from the current experiment compare to previous work [4], when animals with similar types of lesions learned the same spatial navigation and cue response tasks concurrently in the same environment. To address this question, the past and current results were plotted on the same graphs (Fig. 2C). The comparison between these two data sets revealed two facts. First, for both DSL and HPC, the patterns of contributions of each structure to the task incongruous with that structure's type of information processing – DSL to spatial navigation and HPC to cue response, respectively - were remarkably similar (Fig. 2C, blue highlights). Because the DSL groups performed the same in spatial navigation regardless of whether the rats learned the two tasks concurrently (previous data) or on distinct days (current data), it seems that the temporal factor did not modulate DSL's property of linking distinct memories based on space. Similarly, because the HPC groups performed the same on cue response regardless of whether the rats learned the two tasks in the same (previous data) or distinct (current data) contexts, it seems that the spatial factor did not impact HPC's property of linking distinct memories based on time (with the caveat discussed above). This finding indicates that HPC and DSL integrate memories based not just on distinct but also largely complementary functional principles. Second, the comparison between past and present results confirmed that in tasks congruous with the type of representation each brain area forms, the lesion effects were modulated by training protocol (Fig. 2C, orange

highlights). Thus, depending on learning circumstances, normal behavior can have vastly different neurobiological bases (Extended Data Fig. 3). This finding underscores the idea that a memory-based action does not result from neural activity in a restricted brain area, but instead is supported by extended networks whose contribution to behavior depends on learning circumstances.

DISCUSSION

Patient H.M.'s selective amnesia that followed after the bilateral resection of his medial temporal lobes [8] indicated that memory is not a general property of neural networks. Instead, the pattern of memory deficits documented in H. M. and similar patients showed that localized neural circuits are responsible for different kinds of memories. This finding triggered numerous subsequent studies in which the mnemonic functions of various brain areas were extensively investigated. This analytical approach provided much information about memory organization in the brain and the underlying mechanisms. However, the opposite problem, of how different memories are integrated, remains poorly understood. The current data contribute to filling some of this gap, as they demonstrate that DSL and HPC link memories based on spatial and temporal factors, respectively. Notably, the memories involved were of distinct kinds, suggesting a real possibility that activity in one memory circuit may affect processes in a different memory circuit [37]. Two immediate implications were already mentioned above. First, the ability of DSL network to link temporally distant spatial and response memories based on the environment within which these memories are formed may be the underlying cause of relapse in drug addiction. Second, the ability of the HPC circuits to link different types of memories based primarily on temporal rather than spatial factors indicates that the 'when' of episodic memory may act as the thread linking the distinct spaces (and possibly also contents) of individual events, a possibility also supported by recent data [38,39 40]. A third notable implication comes from the significant modulatory effects of training procedure on the contributions of DSL, HPC, and DSM to performance in the two tasks which underscored the fact that the neurobiological (and presumably also neurophysiological) basis of a normal behavior can vary considerably depending on the circumstances in which learning occurred.

EXPERIMENTAL DESIGN AND METHODOLOGY

Subjects

Male Long–Evans rats (300-350g, 4-6 months old, Envigo) were housed individually (12 hour light cycle) and tested during the day. The animals were acclimatized to the colony and then food-deprived to no more than 85–90% of *ad libitum* body weight and kept at this standard throughout the experimental procedure. A total of 63 animals (32 rats for the 2Contexts condition and 31 rats for the 2Days condition) were included in this study, but only data from animals with lesions restricted to the intended areas were incorporated in the final analysis: DSM and DSL, 6 rats/group in either training condition; HPC 7 rats/group the 2Contexts condition and 8 rats/group in the 2Days condition.

Apparatus. The two plus mazes were made of gray polyvinyl chloride (PVC) and elevated 91 cm from the floor of two distinct rooms that each contained several visual cues and were illuminated distinctly. Each of the 4 arms was 61 cm long and 6.3 cm wide. A grey PVC block (30.4 cm high, 6.3 cm wide, 15.2 cm deep) was used to block the start arm that was not in use for that trial. In each case, a rectangular waiting platform (32cm x 42cm) was placed next to the maze. In the cued version of the task, a white visible flag also made of PVC was used to indicate the location of the food on the maze; during the spatial version of the task, the cue was placed on a table in the room and off the maze.

Behavioral Training and Testing.

Experiment 1: Learning two types of tasks concurrently but in distinct contexts. One set of animals was trained in the two tasks on the same day, but each task was consistently associated with a dedicated environment. Each animal underwent one day of habituation, in which it was placed on each of the plus mazes in the presence of food; the visible flag was present on the maze in which the animal would then run the cue response task. Within each lesion group, the environments were counterbalanced across animals and the tasks were learned in random order across days; once an animal completed a session in one environment it was placed in the home cage and taken in the second environment, where it underwent the second session. Training continued until the rats reached a criterion of 80% correct choices for two consecutive days in both tasks, after which they were assigned to one of four groups: HPC lesions, DSM lesions, DSL lesions, and sham controls. After a recovery interval of 5-

10 days, retention was evaluated for 5 consecutive days. To test whether the animals associated a task with its dedicated environment, in the last day of post lesion testing each animal performed each of the two tasks in the 'other' environment. ***Experiment 2: Learning two types of tasks in the same context but at distinct times.*** A second group of animals was trained in the same two tasks but in this case, each animal was trained in only one context in which it learned the two tasks on different days. An example of such sequence of training sessions was cue-cue-spatial-cue-spaital-cue-spatial-cue-cue-spatial-spatial-spatial-cue-spatial-cue-spatial-cue-cue. The training continued until the animal reached the 20% or less error criterion on two consecutive days for each of the two tasks, after which the animals were randomly assigned to the four lesion subgroups. To avoid a context-specific effect, the two environments used in Experiment 1 were used in a counterbalanced manner (thus, in a lesion subgroup of six animals, three would be trained/tested in one environment and the rest of three in the other), as well as the context/task of the first post-lesion retention test.

Spatial navigation and cue response tasks: All animals were pre-exposed to the maze in the presence of food for two consecutive days and then trained to walk from either the North or the South start arms to the end of West or East goal arms to obtain half a Fruit Loop. Between trials, the rats were placed on the side platform to wait for the next trial. Entry with all four paws into the unrewarded arm defined an *error*, which the rat was allowed to correct. Training procedures followed previously published protocols [41,42] and utilized a spatial navigation task with serial reversals and a cue-response task (Fig. 1). In both cases, the start and the goal arm were selected based on a pseudorandom sequence of 60 trials with ≤ 3 consecutive repetitions of the same type of journey (NE, NW, SE or SW). *Spatial task.* In the spatial task, the animal was rewarded for remembering spatial location. The position of the food was kept constant until the rat entered the correct goal arm in 9 of 10 consecutive trials. At that point, the other goal arm was baited and a new block of trials began. If the animal did not reach the criterion in maximum 15 trials, the location of the food was changed automatically, to avoid unbalanced reinforcement of any specific goal arm. Alternating trial blocks continued up to either 4 blocks or 60 total trials. *Cue task.* In this case, the rats had to remember an association between the visible cue, whose location was rendered irrelevant by changing start and goal positions based on a pseudorandom sequence, and a motor response which was the walk towards the cue. Animals received 45 trials in each session, a number approximately

equal to the number of trials necessary to complete four blocks of trials in the spatial task. Thus, each goal arm was rewarded approximately equally both within and across tasks.

Lesions. Rats were anesthetized with isoflurane and diazepam or midazolam (10mg/kg). Atropine (5 mg/kg body weight) was also administered in order to avoid fluid accumulation in the respiratory tract. Neurotoxic lesions were made by injecting either a solution of 5mg/ml NMDA in phosphate buffer (pH 7.4); or a solution of quinolinic acid (25mg/ml in phosphate buffer titrated with sodium hydroxide to pH 7.4) through a 30-gauge cannula attached to a minipump (0.2 µl/min; New Era Pump Systems, Inc., Model NE-4000). At the end of each injection, the cannula was left in place for 3 mins, retracted 0.5 mm and left in this location for 2 mins, and then slowly retracted completely. The coordinates of each injection and the volumes injected are presented in Table 1. In order to prevent seizure development, a second, ip., injection of valium (10 mg/kg body weight) was administered prior to neurotoxin infusion and animals were monitored until completely awake and active in their home cages. Sham animals were anesthetized, incised and sutured.

Table 1. Lesion coordinates.

a. Hippocampal lesions.
AP, antero-posterior from bregma; L, lateral from bregma; V, ventral from bregma. All coordinates are in mm.

1. AP-3.1; L+/-1.0; V-3.6 0.25µl	6. AP-5.0; L+/-5.2; V-5.0 0.3µl
2. AP-3.1; L+/-2.0; V-3.6 0.25µl	7. AP-5.0; L+/-5.2; V-7.3 0.3µl
3. AP-4.1; L+/-2.0; V-4.0 0.25µl	8. AP-5.8; L+/-4.4; V-4.4 0.3µl
4. AP-4.1; L+/-3.5; V-4.0 0.25µl	9. AP-5.8; L+/-5.1; V-6.2 0.40µl
5. AP-5.0; L+/-3.0; V-4.1 0.3µl	10. AP-5.8; L+/-5.1; V-7.5 0.40µl

b. DSM (left) and DSL (right) lesions.
AP, antero-posterior from bregma; L, lateral from bregma; V, ventral from bregma. All coordinates are in mm.

1. AP+1.6; L+/-1.9; V-4.8 0.20µl	1. AP+1.6; L+/-3.0; V-6.2 0.20µl
2. AP+0.5; L+/-2.2; V-5.0 0.20µl	2. AP+0.8; L+/-3.7; V-6.6 0.20µl
3. AP-0.8; L+/-2.8; V-3.6 0.20µl	3. AP-0.5; L+/-4.5; V-6.6 0.20µl

Behavioral Data analysis. Percent performance error was calculated for each rat during each day of testing and a mean was calculated for each group during each day. All analyses were done using SAS version 9.2 (SAS Institute, Inc., NY). Differences in performance were assessed using two-way mixed models analyses. Time (in days) and lesion groups as categorical independent variables; and performance as percent error on repeated time points as a dependent variable were entered into the model. The degrees of freedom were computed according to Sattherthwaite formula, which takes into consideration the variance within the group along with the sample size, and is robust against heterogeneity of variance. Where overall analyses indicated significant differences, differences in performance between each lesion group and the sham group were investigated.

Tissue Preparation and Processing for Histology. Rats were overdosed with isoflurane (administered in closed environment) and perfused transcardially with normal saline, then 10% formalin for tissue fixation. Coronal sections (40 μm) were cut on a cryostat and stained with cresyl violet to evaluate the extent of the lesion.

Lesion Assessment.

Brains were sectioned coronally. Each 4th section in the striatum lesion groups, and each 5th section in the hippocampal lesion groups was mounted on a microscope slide to be used for lesion evaluation. We first inspected visually under the microscope and traced each lesion on a set of histological plates [43]. Data from animals whose lesions were not sufficiently inclusive (i.e., encompass most of the targeted area) and selective (i.e., extended bilaterally to significant portions of other brain areas) were excluded from further analysis. The lesions that passed criterion underwent quantification analysis. All slides incorporated in the analysis were scanned using a slide scanner (Aperio AT2, Leica Biosystems) to generate digital images of the sections. Dedicated software (ImageScope) was then used to visualize and measure for each section the area of preserved hippocampal or striatal tissue. This procedure was also performed for brain tissue from four control animals for the dorsal striatum and four control animals for the hippocampus. From the total number of sections, 10 sections were selected from each animal in the DSM and DSL groups and 14 sections in the HPC groups (approximately half the total number of sections) so that approximately equivalent levels on the antero-posterior axis were captured in the analysis across animals. The values of the preserved tissue areas were then added up to estimate

the total healthy tissue for each animal. (Because the brain tissue was sampled at regular intervals of 200 μm for all HPC tissue and 160 μm for all DS tissue in control and lesion animals alike, multiplying by the constant distance between sections was not necessary to obtain an estimate of the lesion as % from the total structure.) The totals for the control animals were averaged for the dorsal striatum and hippocampus, respectively, and this value was considered as 100% in the computation that evaluated the lesion size. For each lesioned animal, %healthy tissue was computed by dividing the area of healthy tissue in their brain by the corresponding area in the control brain; the %lesion was obtained then as the difference from %healthy tissue to 100%. For each lesion group we compared the %damage across the three experimental conditions using an unpaired t-test (The SAS Institute).

.

1. Squire, L. R. & Wixted, J. T. The cognitive neuroscience of human memory since H.M. *Annu Rev Neurosci* **34**, 259-288 (2011).
2. White, N. M., Packard, M. G. & McDonald, R. J. Dissociation of memory systems: The story unfolds. *Behavioral Neuroscience* **127**, 813-834 (2013).
3. Jacobson, T. K., Gruenbaum, B. F. & Markus, E. J. Extensive training and hippocampus or striatum lesions: effect on place and response strategies. *Physiol Behav* **105**, 645-652 (2012).
4. Ferbinteanu, J. Contributions of Hippocampus and Striatum to Memory-Guided Behavior Depend on Past Experience. *J Neurosci* **36**, 6459-6470 (2016).
5. Squire, L. R., Knowlton, B. & Musen, G. The structure and organization of memory. *Annual review of psychology* **44**, 453-495 (1993).
6. Squire, L. Memory systems of the brain: a brief history and current perspective. *Neurobiol Learn Mem* **82**, 171-177 (2004).
7. White, N. M. & McDonald, R. J. Multiple parallel memory systems in the brain of the rat. *Neurobiol Learn Mem* **77**, 125-184 (2002).
8. Scoville, W. B. & Milner, B. Loss of recent memory after bilateral hippocampal lesions. *J Neurol Neurosurg Psychiatry* **20**, 11-21 (1957).
9. Packard, M. G., Hirsh, R. & White, N. M. Differential effects of fornix and caudate nucleus lesions on two radial maze tasks: evidence for multiple memory systems. *J Neurosci* **9**, 1465-1472 (1989).
10. Squire, L. R. & Zola-Morgan, S. The medial temporal lobe memory system. *Science* **253**, 1380-1386 (1991).
11. McDonald, R. J. & White, N. M. A triple dissociation of memory systems: hippocampus, amygdala, and dorsal striatum. *Behavioral neuroscience* **107**, 3-22 (1993).
12. Eichenbaum, H. A cortical-hippocampal system for declarative memory. *Nat Rev Neurosci* **1**, 41-50 (2000).
13. Aggleton, J. P. & Pearce, J. M. Neural systems underlying episodic memory: insights from animal research. *Philos Trans R Soc Lond B Biol Sci* **356**, 1467-1482 (2001).
14. Knowlton, B. J., Mangels, J. A. & Squire, L. R. A neostriatal habit learning system in humans. *Science* **273**, 1399-1402 (1996).
15. Packard, M. G. & McGaugh, J. L. Inactivation of hippocampus or caudate nucleus with lidocaine differentially affects expression of place and response learning. *Neurobiol Learn Mem* **65**, 65-72 (1996).
16. Packard, M. G., Cahill, L. & McGaugh, J. L. Amygdala modulation of hippocampal-dependent and caudate nucleus-dependent memory processes. *Proc Natl Acad Sci U S A* **91**, 8477-8481 (1994).
17. McDonald, R. J. & White, N. M. Parallel information processing in the water maze: evidence for independent memory systems involving dorsal striatum and hippocampus. *Behavioral and neural biology* **61**, 260-270 (1994).
18. Devan, B. D. & White, N. M. Parallel information processing in the dorsal striatum: relation to hippocampal function. *J Neurosci* **19**, 2789-2798 (1999).
19. Ragozzino, M. E. The contribution of the medial prefrontal cortex, orbitofrontal cortex, and dorsomedial striatum to behavioral flexibility. *Ann N Y Acad Sci* **1121**, 355-375 (2007).
20. Yin, H. H. & Knowlton, B. J. Contributions of striatal subregions to place and response learning. *Learn Mem* **11**, 459-463 (2004).
21. Packard, M. G. Exhumed from thought: basal ganglia and response learning in the plus-maze. *Behav Brain Res* **199**, 24-31 (2009).
22. McDonald, R. J., King, A. L., Wasiak, T. D., Zelinski, E. L. & Hong, N. S. A complex associative structure formed in the mammalian brain during acquisition of a simple visual discrimination task: dorsolateral striatum, amygdala, and hippocampus. *Hippocampus* **17**, 759-774 (2007).
23. Lee, A. S., Duman, R. S. & Pittenger, C. A double dissociation revealing bidirectional competition between striatum and hippocampus during learning. *Proc Natl Acad Sci U S A* **105**, 17163-17168 (2008).
24. McDonald, R. J. & White, N. M. Hippocampal and nonhippocampal contributions to place learning in rats. *Behavioral Neuroscience* **109**, 579-591 (1995).

25. O'Reilly, K. C., Alarcon, J. M. & Ferbinteanu, J. Relative contributions of CA3 and medial entorhinal cortex to memory in rats. *Front Behav Neurosci* **8**, 292 (2014).
26. Ragozzino, M. E., Ragozzino, K. E., Mizumori, S. J. & Kesner, R. P. Role of the dorsomedial striatum in behavioral flexibility for response and visual cue discrimination learning. *Behav Neurosci* **116**, 105-115 (2002).
27. Lee, A. S., Andre, J. M. & Pittenger, C. Lesions of the dorsomedial striatum delay spatial learning and render cue-based navigation inflexible in a water maze task in mice. *Front Behav Neurosci* **8**, 42 (2014).
28. Yin, H. H., Ostlund, S. B., Knowlton, B. J. & Balleine, B. W. The role of the dorsomedial striatum in instrumental conditioning. *Eur J Neurosci* **22**, 513-523 (2005).
29. Burton, A. C., Nakamura, K. & Roesch, M. R. From ventral-medial to dorsal-lateral striatum: Neural correlates of reward-guided decision-making. *Neurobiol Learn Mem* **117C**, 51-59 (2015).
30. McDonald, R. J., King, A. L. & Hong, N. S. Context-specific interference on reversal learning of a stimulus-response habit. *Behav Brain Res* **121**, 149-165 (2001).
31. Lehmann, H. et al. Making context memories independent of the hippocampus. *Learn Mem* **16**, 417-420 (2009).
32. Sparks, F. T., Lehmann, H. & Sutherland, R. J. Between-systems memory interference during retrieval. *Eur J Neurosci* **34**, 780-786 (2011).
33. White, N. M. & Salinas, J. A. Mnemonic functions of dorsal striatum and hippocampus in aversive conditioning. *Behav Brain Res* **142**, 99-107 (2003).
34. Ragozzino, M. E., Jih, J. & Tzavos, A. Involvement of the dorsomedial striatum in behavioral flexibility: role of muscarinic cholinergic receptors. *Brain Res* **953**, 205-214 (2002).
35. Yin, H. H. & Knowlton, B. J. The role of the basal ganglia in habit formation. *Nat Rev Neurosci* **7**, 464-476 (2006).
36. Gremel, C. M. & Costa, R. M. Orbitofrontal and striatal circuits dynamically encode the shift between goal-directed and habitual actions. *Nature Communications* **4**, (2013).
37. Kim, J. J. & Baxter, M. G. Multiple brain-memory systems: the whole does not equal the sum of its parts. *Trends Neurosci* **24**, 324-330 (2001).
38. Rubin, A., Geva, N., Sheintuch, L. & Ziv, Y. Hippocampal ensemble dynamics timestamp events in long-term memory. *Elife* **4**, e12247 (2015).
39. Cai, D. J. et al. A shared neural ensemble links distinct contextual memories encoded close in time. *Nature* **534**, 115-118 (2016).
40. Mankin, E. A., Diehl, G. W., Sparks, F. T., Leutgeb, S. & Leutgeb, J. K. Hippocampal CA2 activity patterns change over time to a larger extent than between spatial contexts. *Neuron* **85**, 190-201 (2015).
41. Ferbinteanu, J. & Shapiro, M. L. Prospective and retrospective memory coding in the hippocampus. *Neuron* **40**, 1227-1239 (2003).
42. Ferbinteanu, J., Shirvalkar, P. & Shapiro, M. L. Memory Modulates Journey-Dependent Coding in the Rat Hippocampus. *J Neurosci* **31**, 9135-9146 (2011).
43. Paxinos, G. & Watson, C. *The rat brain in stereotaxic coordinates* (San Diego, CA: Academic, 1988).

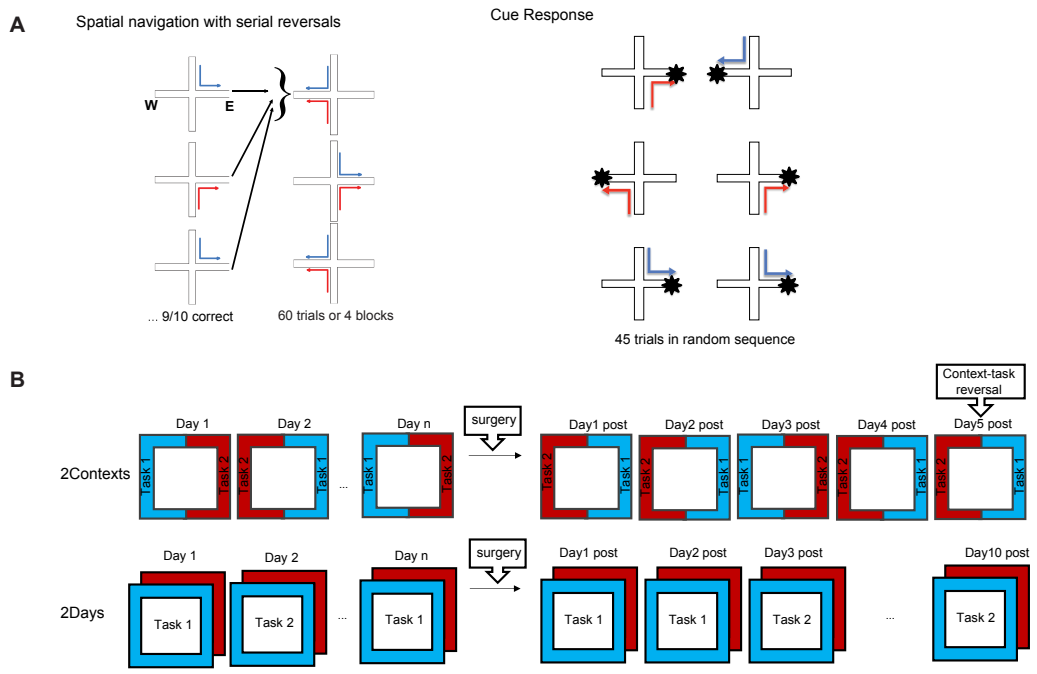

Figure 1. Behavioral paradigm and experimental design. A. The experiment used two distinct tasks, spatial navigation with serial reversals (left) and cue response (right). In both tasks the animals started either in the north or south arm of a plus maze apparatus, and hand to find food in either the east or the west arms. In the spatial navigation task, the food could be found based on its location, which was consistent across a block of trials in which the rat had to perform 9 times correct in a sequence of 10 trials. At that point, the location of the food was switched to the other arm and a new block of trials started. Each block had maximum 15 trials and each session was constituted of 4 blocks to a total of maximum 60 trials. In the cue response task, the food was placed on a white flag whose position was randomly varied between the two goal arms to a total of 45 trials. The design ensures that the behavioral strategies suitable for solving each of the two tasks are mutually exclusive. B. Two training conditions, 2Contexts and 2Days, were used. In the 2Contexts condition, rats were trained/tested in both tasks during the same session, and each task was set in a dedicated context. Thus, in this case spatial and response learning occurred concurrently but in distinct contexts. To test for the ability of the animals to form specific relationships between a task and the context within which that task was performed, each animal underwent a context-task reversal during the 5th day of retention testing (i.e., the contexts were swapped). In the 2Days condition, rats were trained/tested in one context but engaged in either spatial or response learning across different days. To avoid a context-specific effect, two separate subgroups of rats were assigned to either of the two contexts employed in the 2Contexts condition. The order of task presentation across days was pseudorandom. In this case, spatial and response learning occurred in the same context but were temporally separated.

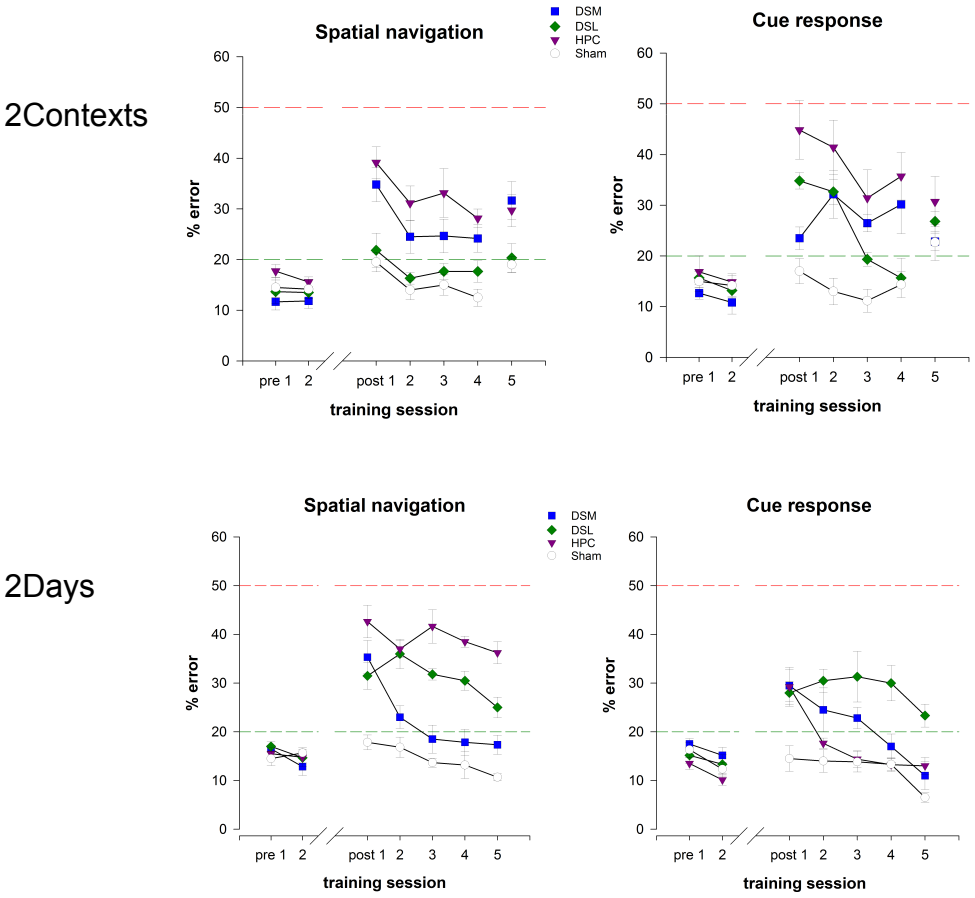

Figure 2. Behavioral performance for all groups in the two training conditions. **A.** Data organized to facilitate comparisons across lesion groups in the same training condition. All groups performed well during the last two days before the surgery; there were no differences in performance except between HPC and DSM in the 2Days condition on the cue response task (day 1 pre: $t_{49.2} = 2.17$, $p = 0.0346$; day 2 pre: $t_{49.2} = 2.74$, $p = 0.0086$). Overall, lesion type caused distinct learning deficits in the 2Contexts condition (spatial navigation: $F_{(3, 25)} = 16.03$, $p < 0.0001$; cue response: $F_{(3, 25)} = 27.74$, $p < 0.0001$ and lesion x day effect: cue response $F_{(9,75)} = 4.11$, $p = 0.0003$) that varied across days (spatial navigation: $F_{(3, 75)} = 15.75$, $p < 0.0001$; cue response: $F_{(3,75)} = 10.17$, $p < 0.000$). The effect of the context/task reversal (last training session) was analyzed separately. The DSL group (n = 6) performed normally on the spatial navigation task, but was impaired on the cue response task. In contrast, the HPC group (n=7) was impaired in both tasks. A similar overall lesion effect was obtained in the 2Days condition (spatial navigation: $F_{(3, 26)} = 54.24$, $p < 0.0001$; cue response $F_{(3, 26)} = 32.36$, $p < 0.0001$ and lesion x day effect: spatial navigation: $F_{(12, 104)} = 3.69$, $p = 0.0001$; cue response: $F_{(12, 104)} = 3.69$, p 0.0001) that varied across days (spatial navigation: $F_{(4, 104)} = 14.78$, $p < 0.0001$; cue response: $F_{(4, 104)} = 12.54$, $p < 0.0001$). In this case, the DSL group (n=6) was impaired in both tasks, while the HPC group (n = 8) showed impaired spatial but largely normal response memory (see B. and text for details of performance during first day post lesion). The performance of the DSM group (n = 6/training condition) did not fit either of these patterns, but rather indicated some degree of memory impairment in all cases. For all graphs, vertical axis shows percentage error in behavioral performance (mean +/- SEM), the horizontal axis shows training/testing sessions, with the break marking the surgery point. The green horizontal lines indicate the criterion threshold of 20%. The red horizontal lines at 50% indicate chance performance level.

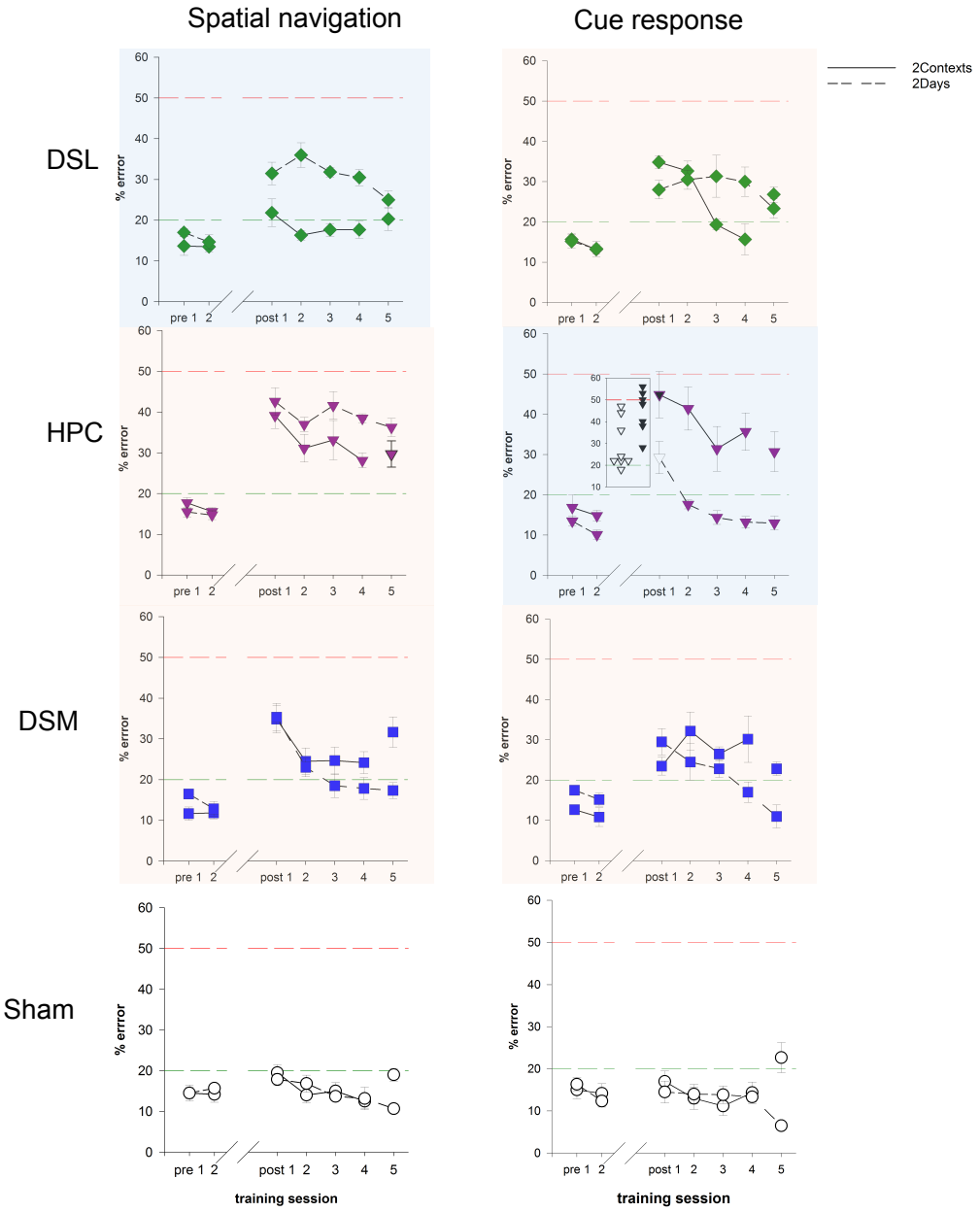

Figure 2B. Same data as in A organized to facilitate comparing performance within each lesion group across the two training conditions. HPC and DSL lesions caused memory deficits in tasks incongruous with the types of representation each area is known to form, but this pattern depended on training conditions (blue highlights). DSL was critical for response memory overall, but also supported spatial navigation when spatial and response learning occurred in the same context across different days. In contrast, HPC was critical to spatial navigation overall, but supported cue response when spatial and response learning occurred concurrently in different contexts. The inset in the graph presenting HPC group performance on the cue response task shows the performance of individual animals during the first day post-lesion testing for the 2Contexts (black) and 2Days (white) conditions. Five of the 8 animals that learned the two tasks in the same environment across different days were close to criterion level (~ 22% error), indicating that in these cases, HPC was not critical for good performance. In contrast, 4 out of 7 animals in the 2Contexts conditions were at chance level and two more showed severe impairment. Training protocol also significantly affected the performance of HPC and DSL groups in the tasks that reflect each structure's type of information processing: spatial navigation for HPC and cue response for DSL (orange highlights, first two rows). DSM lesions caused impairment in both spatial navigation and cue response tasks, but the degree of impairment varied significantly with training procedure only for the cue response task. Normal animals performed at similar levels regardless of training condition, indicating that the same overt behavior can have vastly different neurobiological basis. In all cases, statistical analyses included data from days 1-4 post-lesion training because of the context/task reversal test.

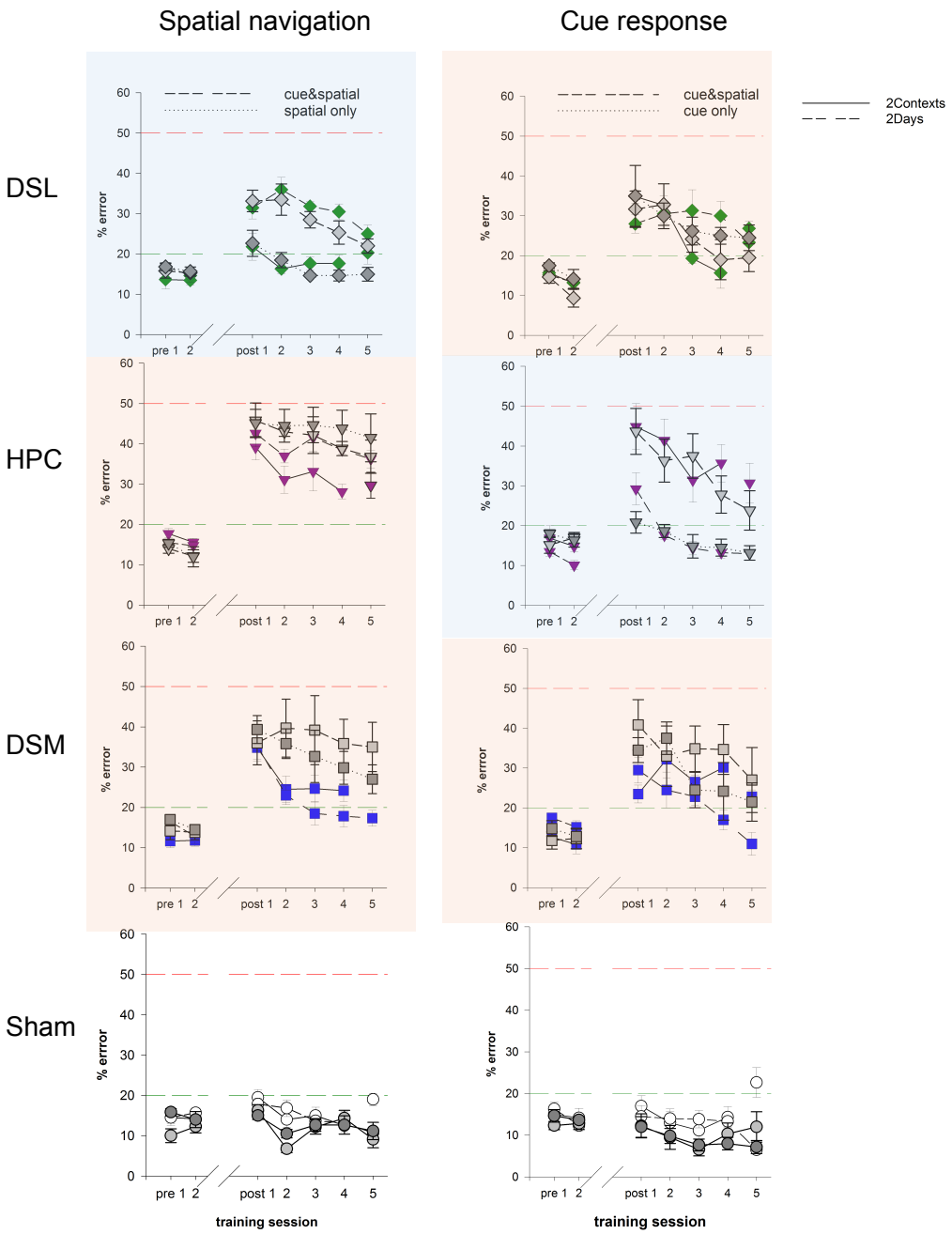

Figure 2C. Same data as in A and B (in color), combined with previous data ({Ferbinteanu, 2016, #44145} in gray) that revealed the effects of DSL, HPC and DSM lesions after training in either one of the two tasks in isolation (spatial only and cue only; dark gray) or in the two tasks concurrently in one context (cue&spatial; light gray). For the DSL groups in spatial navigation and HPC groups in cue response, training protocol introduced similar dissociations in memory performance in the current experiment as present in the older results (blue highlights). Thus, the time factor by itself can account for the effects previously obtained with HPC lesions in the cue response task when both time and space factors were involved. Similarly, the space factor by itself can account for the effects previously obtained with DSL lesions when both time and space factors were involved. In contrast, the performance of DSL lesion groups in the cue response task and HPC lesion groups in the spatial navigation task varied depending on training protocol, as did the performance of the DSM lesion groups overall (orange highlights). Normal animals performed at similar levels regardless of training method.