The inducible *lac* operator-repressor system is functional in zebrafish cells

Sierra S. Nishizaki[1,2,*], Torrin L. McDonald[1,*], Gregory A. Farnum[2], Monica J. Holmes[2], Melissa L. Drexel[1], Jessica A. Switzenberg[2], Alan P. Boyle[1,2,†]

1. Department of Human Genetics, University of Michigan, Ann Arbor, MI, USA 48109

2. Department of Computational Medicine and Bioinformatics, University of Michigan, Ann Arbor, MI, USA 48109

*** These authors contributed equally to this work.**

† Correspondence: apboyle@umich.edu

Abstract

Zebrafish have been a foundational model organism for studying the spatio-temporal activity of genes and their regulatory sequences. A variety of approaches are currently available for editing genes and modifying gene expression in zebrafish including RNAi, Cre/lox, and CRISPR-Cas9. However, the *lac* operator-repressor system, a component of the *E. Coli lac* operon, has been adapted for use in many other species to study the inducible modulation of gene expression, but has not previously been shown to function in zebrafish. Here we demonstrate that the *lac* operator-repressor system robustly decreases expression of firefly luciferase in cultured zebrafish fibroblast cells. Our work establishes the *lac* operator-repressor system as a promising tool for the manipulation of gene expression in whole zebrafish. Additionally we show the first evidence that the cytomegalovirus (CMV) enhancer is active in zebrafish cells and enhances eGFP expression ubiquitously in zebrafish embryos. Our results lay the groundwork for the development of *lac*-based reporter assays in zebrafish, and add to the tools available for investigating dynamic gene expression in embryogenesis. We believe that this work will catalyze the development of new reporter assay systems to investigate uncharacterized regulatory elements and their cell-type specific activities.

Introduction

Experimental approaches for the study of transcriptional regulation by cis-regulatory elements *in vivo* require methods for both genetically modifying cells or organisms and for measuring expression levels of specific genes. Zebrafish (*Danio rerio*) is an ideal model organism for investigating the spatio-temporal-specific regulation of gene expression throughout the developing embryo as it satisfies the requirements for ease of genetic manipulation and expression readout. Microinjection of DNA into fertilized embryos allows for simple and effective delivery of genome-modification tools, such as *Tol2* transposons, that mediate genomic integration of constructed expression cassettes. Additionally, the transparency of zebrafish embryos facilitates the observation of fluorescent signal from reporter genes within live cells and tissue. Due to its benefits as a model organism, many technologies for studying gene function have been developed in zebrafish, including Cre/Lox[1], tamoxifen-inducible Cre[2], the Tet-On system[3], RNAi[4,5], and more recently, CRISPR based-methods[6]. However, the use of the *lac* operator-repressor system, a tool which can function transiently and more readily in a native context with minimal disruption of local regulation, has yet to be demonstrated in zebrafish.

The *lac* operator-repressor system is an inducible repression system established from studies of the *lac* operon in *Escherichia coli* (*E. coli*) that regulates lactose transport and metabolism[7]. The

Lac repressor (LacI) binds specifically to a *lac* operator sequence (*lacO*), inhibiting the *lac* promoter and *lac* operon expression through steric hindrance[8]. Addition of the allosteric inhibitor Isopropyl β-d-1-thiogalactopyranoside (IPTG) to cells frees the *lac* operon to express its associated gene by inhibiting the binding of LacI to *lacO* sequences. The use of IPTG with the *lac* operator-repressor allows for inducible reversal of transcriptional repression.

Since its discovery in prokaryotes, the *lac* operator-repressor system has been modified for use in eukaryotic organisms to study the regulation of gene transcription[8-11]. Experiments in mammalian cell lines from mouse, monkey, and human[8-10,12], as well as in whole mouse[13], demonstrate the utility of the *lac* operator-repressor system. It has also successfully been applied in cell lines and whole organisms of the amphibian axolotl, suggesting that this system can be utilized in a wide range of organisms[14]. Modifications to the *lac* operator-repressor system has allowed for output that can be assessed visually[10,12], and to study both gene repression and activation[15,16], emphasizing its flexibility for studying gene expression dynamics. The ability of IPTG to relieve repression in the *lac* system makes it a more adaptable tool for studying the temporal dynamics of gene expression compared to constitutively active or repressed reporter gene systems.

In this paper, we provide evidence that the *lac* operator-repressor system can function in the zebrafish fibroblast cell line PAC2 adding a versatile new tool for the study of zebrafish genetics and transcriptional regulation. We also demonstrate that the strong cytomegalovirus (CMV) enhancer is active in PAC2 cells and in whole zebrafish, which was previously unreported in this model organism. The results in a zebrafish cell line strongly support the potential of the *lac* operator-repressor system to function in whole zebrafish.

Methods

Plasmid design

CMV luciferase plasmids were generated by restriction digestion to insert a CMV enhancer and a minimal SV40 promoter, or only a minimal SV40 promoter, upstream of a luciferase reporter molecule in the context of a pGL3 plasmid (Promega, E1751). Plasmids designed for whole zebrafish injection were generated by replacing the firefly luciferase reporter with an enhanced green fluorescent protein (eGFP) reporter, and adding flanking minimal *Tol2* 200 base pair 5' sequence and 150 base pair 3' sequence for integration into the genome[17].

Lac operator-repressor system plasmids were created using the EMMA golden gate assembly method[18]. All plasmids assembled using EMMA have a backbone consisting of an ampicillin resistance gene and a high-copy-number ColE1/pMB1/pBR322/pUC origin of replication. Backbone elements are denoted by terminating dotted lines in all plasmid schematics (**Fig. 1, Fig. 2, Sup. Fig. 1, Sup. Fig. 2**). The EMMA toolkit was a gift from Yizhi Cai (Addgene kit # 1000000119)[18]. The *lacI* CDS and C-terminal NLS were cloned from the Addgene plasmid pKG215 and inserted into an EMMA entry vector to create an EMMA part. pKG215 was a gift from Iain Cheeseman (Addgene plasmid # 45110)[19]. A frameshift mutation was introduced by inserting an adenosine in the fourth codon of *lacI* to create a non-functional LacI (NFLacI) for use in control experiments. The LacI-expressing module contains a minimal SV40 promoter, the

lacI gene, and a SV40 polyA tail, with or without the addition of an upstream CMV enhancer (**Fig. 2**). The repressible reporter plasmid includes a CMV enhancer and a minimal SV40 promoter upstream of a firefly luciferase gene with symmetric *lac* operators inserted in its 5'UTR, terminated by a SV40 polyA tail. In order to maximize repression activity, six copies of the *lac* operators containing the sequence AATTGTGAGCGCTCACAATT were utilized in this study. This sequence is the "symmetric" *lac* operator that possesses tighter binding with LacI than the canonical *lac* operator sequences[15].

Cell culture

The zebrafish fibroblast cell line PAC2 was maintained as previously reported[20]. Cells were grown at 28 degrees Celsius in Leibovitz's L-15 +glutamine Medium (Invitrogen, 21083027) containing 15% heat inactivated fetal bovine serum (FBS; Sigma-Aldrich, F4135-500ML) and 1% antibiotic-antimycotic (Corning, MT30004CI) until confluent. Confluent cells were washed with 1x phosphate buffered saline (PBS; Invitrogen, 10010023) and detached from the plate with 0.05% Trypsin-EDTA for 5 minutes (Invitrogen, 25300054). Trypsin was quenched with FBS supplemented Leibovitz's L-15 Medium and detached cells were distributed into sterile flasks with fresh media.

Electroporation and luciferase reporter assay

To assess the activity of CMV enhancer in zebrafish cell culture, 4000ng of firefly luciferase expressing plasmids either with or without the CMV enhancer were transfected into $2x10^6$ PAC2 cells via electroporation (**Fig. 1A**). 100ng of the renilla luciferase expressing plasmid (pRL-SV40 Promega, E2231) was included as a transfection control. Firefly/renilla luciferase signal was calculated as the mean of ratios of three technical replicates per biological replicate. Fold change was then calculated relative to the signal of the SV40 promoter-only containing plasmid. The mean of fold-changes is reported and error bars represent standard error.

To test the functionality of our dual module *lac* repressor system in zebrafish cell culture, 2000ng repressible module and 2000ng of LacI-expressing plasmid were co-transfected into $2x10^6$ PAC2 cells by electroporation. 400ng of pRL-SV40 was included as a transfection control (**Fig. 2**).

All transfections were completed using 2mM cuvettes (Bulldog Bio, 12358-346) and electroporated using a NEPA21 Electroporator (Nepagene). Cells were harvested from culture and resuspended in 90uL of Opti-MEM Reduced Serum Medium (ThermoFisher, 31985062) per $1x10^6$ cells. Mastermixes of cells and DNA were prepared according to scale of conditions, and distributed into cuvettes (100uL/cuvette, 10uL of DNA and 90uL of cells). Poring pulse for PAC2 cells was set to the following: 200V, Length 5ms, Interval 50ms, Number of pulses 2, D rate% 10, Polarity +. Poring pulse for K562 was set to the following: 275V, Length 5ms, Interval 50 ms, Number of pulses 1, D rate 10%, Polarity +. For both cell types, the transfer pulse conditions were set to the following: 20V, Pulse length 50ms, Pulse interval 50ms, number of pulses 5, D rate 40%, Polarity +/-. Immediately following electroporation, each cuvette was recovered in 900µL of appropriate media and distributed into a well on a 24-well culture plate. For the transfection in Figure 2, PAC2 cells were recovered in 6-well plates. Each condition had a total of 3 biological replicates. For experiments including LacI, IPTG was treated as a separate

condition and added to 1mM final concentration, unless otherwise specified, at 1 hour and 24 hours post-transfection (**Sup. Fig. 1**).

Luciferase results were collected 48 hours post-transfection on a GloMax-Multi+ Detection System (Promega, E7081) using the Promega Dual-Glo Luciferase Assay System (Promega, E2940).

Zebrafish microinjections

Microinjections were carried out using the *Tol2* transposon system as previously described[17]. Zebrafish embryos were co-injected within 30 minutes of fertilization in the single-cell stage with *Tol2* mRNA, the experimental plasmid, and phenol red for visualization. All embryos were maintained in Holt buffer and fluorescent activity assessed at 24, 48, and 72 hours.

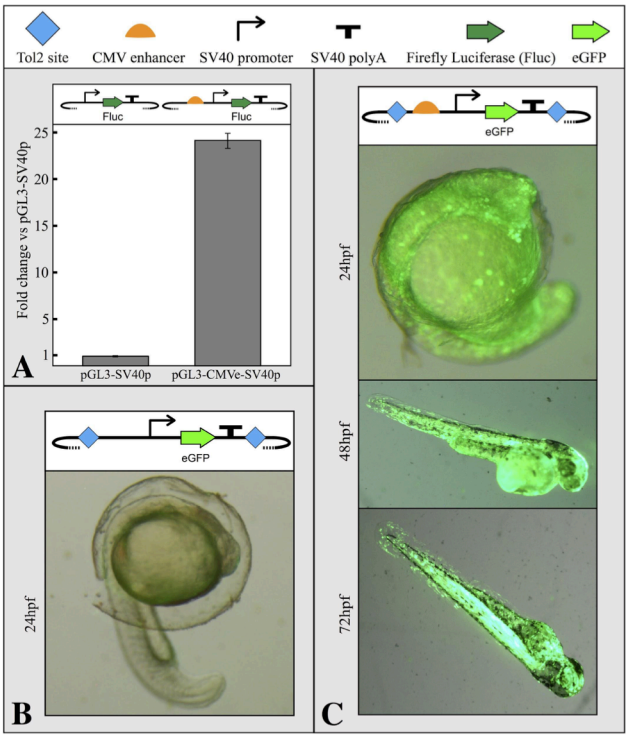

Figure 1. The CMV enhancer drives ubiquitous reporter gene expression in PAC2 cells and zebrafish embryos. A) CMV enhancer shows a 24-fold increase in luciferase activity in PAC2 zebrafish fibroblast cells when transfected with CMV driving luciferase under a minimal promoter compared to a promoter-only plasmid. Error bars represent the standard error of 3 biological replicates. B) SV40 promoter-only plasmids did not result in observable eGFP expression. C) CMV driving eGFP under a minimal promoter shows ubiquitous expression in zebrafish up to 72 hours post fertilization (hpf). All plasmid components for each transfection design are detailed as symbols at the top of the figure. Error bars represent standard deviation of replicates.

Results

The CMV enhancer is functional in zebrafish

The CMV enhancer and promoter are frequently used in reporter vector construction across a wide range of studies due to their strong and constitutive promotion of gene expression. Though the CMV promoter is commonly used in zebrafish, the functionality of the CMV enhancer has yet to be reported in this model organism[10]. In order to test the function of the CMV enhancer in PAC2 cells, it was inserted upstream of a minimal SV40 promoter driving luciferase expression in a pGL3 plasmid. Relative luciferase output of the CMV-enhanced SV40 pGL3 plasmid was compared to a pGL3 plasmid containing only a minimal SV40 promoter. The CMV enhancer was able to drive a 24-fold increase in luciferase expression compared to the promoter-only control, suggesting that CMV is able to function as a strong enhancer in PAC2 zebrafish fibroblast cells (**Fig. 1A**).

To explore if the CMV enhancer was able to enhance reporter expression in whole zebrafish, the *Tol2* transposon system was utilized to integrate eGFP-expressing

test plasmids into zebrafish embryos. As in PAC2 cells, two constructs were evaluated; one containing a CMV enhancer upstream of a minimal promoter driving eGFP reporter expression, and one with only a minimal SV40 promoter. While no detectable level of eGFP activity in the promotor-only control was observed (**Fig. 1B**), composite brightfield and GFP images of 24, 48 and 72 hours post-fertilization embryos injected with the CMV enhancer construct show ubiquitous eGFP expression (**Fig. 1C**). This non-cell type specific pattern of expression has been previously observed for the CMV enhancer in human cell lines[21].

The *lac* operator-repressor system is functional in the PAC2 zebrafish cell line

In order to test the *lac* operator-repressor system, a repressible reporter plasmid containing 6 *lac* operators in the 5'UTR of the firefly luciferase gene and a LacI-expressing plasmid were co-transfected into zebrafish PAC2 cells. When a plasmid expressing a non-functional LacI (NFLacI) gene was co-transfected, no repression was observed (**Fig. 2**), whereas a plasmid expressing CMV enhancer-driven levels of LacI resulted in ~65% repression. An intermediate level of repression (~40%) was observed when LacI was expressed from a plasmid containing only a SV40 minimal promoter, indicating that the extent of repression correlates with LacI levels in the cell. Addition of IPTG to the cells resulted in full relief of repression in all cases. This indicates that LacI is responsible for repression of luciferase expression in these cells.

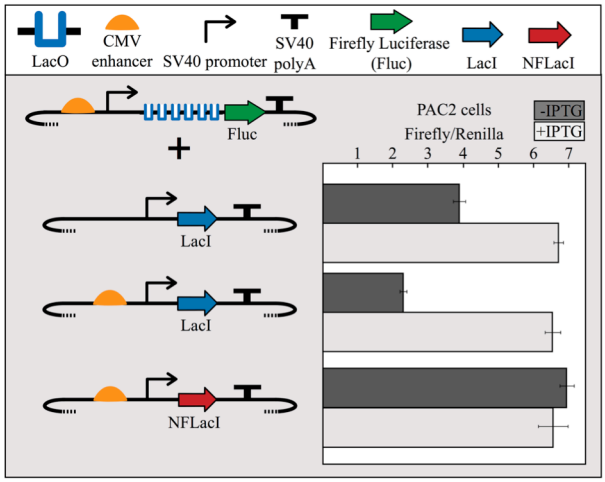

Figure 2. Co-transfection of LacI-expressing modules with repressible reporter modules result in LacI-mediated repression in PAC2 cells. SV40 promoter-only driven expression of LacI shows moderate repression (40%) and CMV enhancer driven expression of LacI shows high repression (70%) of a repressible module containing 6x LacO sites. Expression of non-functional LacI (NFLacI, frameshift mutant) shows no repression and all modules showed maximal reporter expression in the presence of 1mM IPTG. Error bars represent standard deviation of replicates.

This level of repression was then compared to the K562 human cell line where the *lac* operator-repressor system has been previously demonstrated. When comparing both cell types co-transfected with the same plasmid mixture, the performance of the *lac* operator-repressor system was nearly identical in both PAC2 and K562 cells (**Sup. Fig. 2**). Both PAC2 and K562 cell showed ~60-65% repression when co-transfected with ~500ng of CMV enhancer-driven LacI-expressing plasmid, and ~10-20% repression when co-transfected with ~500ng of SV40 promoter-only driven LacI-expressing plasmid. These results demonstrate that the *lac* operator-repressor system functions in PAC2 cells similarly to human K562 cells.

Discussion

Zebrafish are a commonly used model organism for studying the spatio-temporal dynamics of cis-regulatory element activity and gene function. However, the *lac* operator-repressor system, which is a widely used flexible tool for these studies in other organisms, has previously been untested in zebrafish. Here we demonstrate that the *lac* operator-repressor system functions in zebrafish cells. Moreover, this system behaves consistently with its activity observed in other eukaryotic systems.

In our development of the *lac* operator system in zebrafish, it was also important to demonstrate the activity of a ubiquitous enhancer. The CMV enhancer is routinely used to drive strong, constitutive gene expression. We provide quantitative evidence that the CMV enhancer robustly increases luciferase gene expression over a promoter-only control plasmid in zebrafish fibroblasts. Furthermore, we observed strong, ubiquitous eGFP signal in fertilized zebrafish eggs that persisted 72 hours post-fertilization after integration of a CMV enhancer controlled SV40-eGFP reporter construct. These strong levels of expression are important in whole-organism studies where only a small number of cells may be expressing a reporter gene, and a high level of expression from a ubiquitous enhancer such as CMV may facilitate their detection.

We demonstrate that the changes in expression of the repressor protein LacI are inversely related to changes in the reporter expression. Importantly, this response appears to provide a level of repression directly related to the level of LacI rather than functioning as an on/off switch. This property will allow for a more nuanced measure of *lac* regulatory control. Upon the addition of IPTG, we are able to recover luciferase signal to the levels of a non-functional LacI control, indicating that robust repression is completely reversible at low concentrations of IPTG. The strong response to IPTG treatment, as well as minimal toxicity in a zebrafish cell line, suggest the *lac* operator-repressor system is a viable tool for use in whole zebrafish.

Lac operator-repressor systems can be used to control endogenous gene expression without interrupting native regulatory processes as *lacO* sites can be inserted in benign regions such as introns and UTRs. Transcriptional inhibition of RNA polymerase by steric hindrance can achieve repression without introducing artificial modifications to the locus and causing prolonged alterations in regulatory behavior. This is in contrast to other systems that achieve transcriptional control by tethering a protein domain with activating or silencing effects through chromatin modifying or other endogenous mechanisms. Although inducible expression can be achieved by the Tet-related systems, they also require that a special promoter be inserted, whereas *lac* operator-repressor systems can achieve the same result by inserting *lac* operators strategically, as demonstrated by the REMOTE-control system[15]. Crucially, this system now allows for time-controlled experiments, where a reporter gene is repressed only for a limited time window, making it a strong tool for replicating the restriction of gene expression during development.

Competing Interests

The authors declare that they have no competing interests.

Acknowledgements

This work was supported by the Alfred P. Sloan Foundation [FG-2015-65465] and the National Human Genome Research Institute [R00HG007356]. We thank Dr. Anthony Antonellis for the use of his zebrafish facilities, Dr. John Moran for the use of his plate reader, and Dr. Shigeki Iwase for the use of his Nepagene21 electroporator system.

References

1. Langenau, D. M. *et al.* Cre/lox-regulated transgenic zebrafish model with conditional myc-induced T cell acute lymphoblastic leukemia. *Proc Natl Acad Sci USA* **102,** 6068–6073 (2005).
2. Hans, S., Kaslin, J., Freudenreich, D. & Brand, M. Temporally-controlled site-specific recombination in zebrafish. *PLoS ONE* **4,** e4640 (2009).
3. Campbell, L. J., Willoughby, J. J. & Jensen, A. M. Two Types of Tet-On Transgenic Lines for Doxycycline-Inducible Gene Expression in Zebrafish Rod Photoreceptors and a Gateway-Based Tet-On Toolkit. *PLoS ONE* **7,** e51270–11 (2012).
4. Dodd, A., Chambers, S. P. & Love, D. R. Short interfering RNA-mediated gene targeting in the zebrafish. *FEBS Letters* **561,** 89–93 (2004).
5. Kelly, A. & Hurlstone, A. F. The use of RNAi technologies for gene knockdown in zebrafish. *Brief Funct Genomics* **10,** 189–196 (2011).
6. Hwang, W. Y. *et al.* Efficient *In Vivo* Genome Editing Using RNA-Guided Nucleases. *Nat. Biotechnol.* **31,** 227–229 (2013).
7. Jacob, F. & Monod, J. Genetic regulatory mechanisms in the synthesis of proteins. *Journal of Molecular Biology* **3,** 318–356 (1961).
8. Brown, M. *et al.* lac repressor can regulate expression from a hybrid SV40 early promoter containing a lac operator in animal cells. *Cell* **49,** 603–612 (1987).
9. Hu, M. C. & Davidson, N. The inducible lac operator-repressor system is functional in mammalian cells. *Cell* **48,** 555–566 (1987).
10. Liu, H. S., Feliciano, E. S. & Stambrook, P. J. Cytochemical observation of regulated bacterial beta-galactosidase gene expression in mammalian cells. *Proc Natl Acad Sci USA* **86,** 9951–9955 (1989).
11. Fieck, A., Wyborski, D. L. & Short, J. M. Modifications of the E.coli Lac repressor for expression in eukaryotic cells: effects of nuclear signal sequences on protein activity and nuclear accumulation. *Nucleic Acids Res.* **20,** 1785–1791 (1992).
12. Figge, J., Wright, C., Collins, C. J., Roberts, T. M. & Livingston, D. M. Stringent regulation of stably integrated chloramphenicol acetyl transferase genes by E. coli lac repressor in monkey cells. *Cell* **52,** 713–722 (1988).
13. Wyborski, D. L., DuCoeur, L. C. & Short, J. M. Parameters affecting the use of the lac repressor system in eukaryotic cells and transgenic animals. *Environ. Mol. Mutagen.* **28,** 447–458 (1996).
14. Whited, J. L., Lehoczky, J. A. & Tabin, C. J. Inducible genetic system for the axolotl. *Proc. Natl. Acad. Sci. U.S.A.* **109,** 13662–13667 (2012).
15. Lee, K.-H., Oghamian, S., Park, J.-A., Kang, L. & Laird, P. W. The REMOTE-control system: a system for reversible and tunable control of endogenous gene expression in mice. *Nucleic Acids Res.* 1–14 (2017). doi:10.1093/nar/gkx829
16. Vander Schaaf, N. A. *et al.* In vivo Application of the REMOTE-control System for the Manipulation of Endogenous Gene Expression. *J Vis Exp* e59235 (2019). doi:10.3791/59235
17. Kawakami, K. Tol2: a versatile gene transfer vector in vertebrates. *Genome Biol.* **8 Suppl 1,** S7 (2007).
18. Martella, A., Matjusaitis, M., Auxillos, J., Pollard, S. M. & Cai, Y. EMMA: An Extensible

Mammalian Modular Assembly Toolkit for the Rapid Design and Production of Diverse Expression Vectors. *ACS Synth. Biol.* **6,** 1380–1392 (2017).
19. Gascoigne, K. E. *et al.* Induced Ectopic Kinetochore Assembly Bypasses the Requirement for CENP-A Nucleosomes. *Cell* **145,** 410–422 (2011).
20. Senghaas, N. & Koster, R. W. Culturing and Transfecting Zebrafish PAC2 Fibroblast Cells. *Cold Spring Harbor Protocols* **2009,** pdb.prot5235–pdb.prot5235 (2009).
21. Jia, Z., Jia, J., Zhang, S. & Cao, J. CMV enhancer may not be suitable for tissue-specific enhancement of promoters in cancer gene therapy. *Cancer Gene Therapy* 1–4 (2019). doi:10.1038/s41417-019-0106-x