A modular chromosomally integrated toolkit for ectopic gene expression in *Vibrio cholerae*

Triana N. Dalia[1], Jennifer L. Chlebek[1], and Ankur B. Dalia[1,*]

[1]Department of Biology, Indiana University, Bloomington, IN 47405

*Author for correspondence: ankdalia@indiana.edu

Abstract

The ability to express genes ectopically in bacteria is essential for diverse academic and industrial applications. Two major considerations when utilizing regulated promoter systems for ectopic gene expression are (1) the ability to titrate gene expression by addition of an exogenous inducer and (2) the leakiness of the promoter element in the absence of the inducer. Also, ectopic gene expression is commonly achieved by use of plasmids, however, many commonly used plasmids are poorly maintained in *Vibrio* species. Here, we describe a modular chromosomally integrated platform for ectopic gene expression in *Vibrio cholerae*. We demonstrate the inducibility of the broadly used promoter elements P_{tac} and P_{BAD}, and compare these to versions that have an additional theophylline-responsive riboswitch (P_{tac}-riboswitch and P_{BAD}-riboswitch). These constructs all exhibited titratable induction of gene expression, however, max induction varied with P_{tac} > P_{BAD} > P_{BAD}-riboswitch > P_{tac}-riboswitch. We also developed a highly sensitive reporter system to quantify promoter leakiness and show that P_{tac} > P_{tac}-riboswitch > P_{BAD} in regard to leakiness, while one construct, P_{BAD}-riboswitch, exhibited no detectable leakiness. We demonstrate the utility of these constructs by showing how they can be employed to study the dynamic activity of type IV competence pili in *V. cholerae*. The modular chromosomally integrated toolkit for ectopic gene expression described here should be broadly valuable for the study of *Vibrio cholerae*. Also, these constructs should be easily transferrable to other naturally transformable species.

Importance

The genetic study of bacteria is greatly eased by the use of promoter systems that allow for the controlled expression of genes in the presence of defined molecules called inducers. Ideally these control systems allow absolute control of gene expression, including a lack of expression

in the absence of inducer and high levels of expression in the presence of inducer. Here, we characterize four promoter systems for controlled regulation of genes in *Vibrio cholerae*. We find that all four of these systems allow for differing levels of expression in the presence of inducer. And in the absence of inducer we find that one of these promoter systems allows for no detectable expression. This promoter system, and the tools we developed to study these promoters, should be broadly valuable to the field.

Introduction

Regulated promoter systems for ectopic gene expression have been widely used in bacterial systems. Two commonly employed system for ectopic gene expression are the isopropyl β-d-1-thiogalactopyranoside (IPTG)-inducible *tac* promoter (P_{tac}) and the arabinose inducible *araBAD* promoter (P_{BAD}) (1, 2). Both of these systems, however, exhibit some degree of leakiness, which allows for gene expression in the absence of the inducer when cells are grown in rich LB medium. Leakiness of P_{BAD} can be reduced, to some extent, by addition of glucose to the growth medium because this promoter is catabolite repressed (3), however, addition of glucose to the growth medium can change the physiology of cells which may introduce a confounding variable for some experiments.

Riboswitches are control elements that can regulate gene expression via direct interactions between a small molecule ligand and mRNA. Synthetic riboswitches that are responsive to the small molecule theophylline have recently been developed, which allow for regulated gene expression in diverse biological systems (4, 5). These riboswitch elements likely fold the mRNA to occlude the ribosome binding site in the absence of theophylline. And binding of theophylline to the riboswitch alters the conformation of the mRNA to expose the ribosome binding site and allow for translation of the downstream gene.

Generally, plasmids are employed for ectopic gene expression. However, many commonly used plasmids are poorly maintained by *Vibrio* species and/or their copy number can vary relative to model systems like *Escherichia coli* (6, 7). Integration of ectopic expression constructs onto the genome can bypass these issues. For many *Vibrio* species (e.g. *Vibrio cholerae*, *Vibrio natriegens*, *Vibrio campbellii*, *Vibrio vulnificus*, *Vibrio parahaemolyticus*, and *Vibrio fischeri*), it is remarkably easy to integrate novel sequences into the bacterial genome by exploiting their inherent capacity to undergo horizontal gene transfer by natural transformation (8-13).

67 Here, we generate a chromosomally integrated modular platform for ectopic gene expression in
68 *Vibrio* species based on the widely-used P_{tac} and P_{BAD} promoters in conjunction with a
69 previously described theophylline responsive riboswitch (5). We demonstrate that this toolkit
70 allows for differing levels of ectopic gene expression (i.e. max induction), and that one of these
71 promoter constructs (P_{BAD}-riboswitch) allows for a broad-range of titratable gene expression
72 without detectable leakiness. We highlight the utility of this tight expression construct to study
73 the dynamic surface appendages required for natural transformation in *V. cholerae*.
74
75 **Results & Discussion**
76 *Design of modular ectopic expression constructs*
77 All of the ectopic expression constructs are distinct 'cassettes' that can be integrated at any
78 location in the bacterial genome (**Fig. 1**). We accomplish this via simple splicing by overlap
79 extension (SOE) PCR (14) to stitch these expression cassettes to upstream and downstream
80 regions of homology (see **Fig. S1** for details) to generate linear PCR products that can then be
81 integrated into the *V. cholerae* genome by chitin-induced natural transformation (8). Once an
82 expression construct is integrated at a genomic locus, the gene of interest to be ectopically
83 expressed can be easily exchanged by SOE PCR and natural transformation (see **Fig. S1** for
84 details).
85
86 The constructs for ectopic gene expression have a modular design where all have a linked
87 antibiotic resistance marker (Ab^R) (**Fig. 1**). This Ab^R facilitates selection during integration into
88 the genome by natural transformation and can be easily altered depending on the need. Linked
89 to this Ab^R, there are the gene control elements. For P_{tac} and P_{tac}-riboswitch constructs, this
90 includes the LacIq repressor and *tac* promoter. By contrast the P_{BAD} and P_{BAD}-riboswitch
91 constructs contain AraC and the *araBAD* promoter. Both the P_{tac} and P_{BAD} promoter constructs
92 can be engineered to have a user-defined ribosome binding site (**Fig. S1**). While the two
93 riboswitch constructs (P_{tac}-riboswitch and P_{BAD}-riboswitch) contain a defined ribosome binding
94 site within the theophylline-dependent riboswitch (riboswitch "E" in (5)) located immediately
95 upstream of the gene of interest (**Fig. 1** and **Fig. S1**).
96
97 *Testing inducibility of ectopic expression constructs with GFP*
98 To test whether these different chromosomally integrated constructs allow for inducible gene
99 expression and to compare the maximum level of expression they support, we generated
100 constructs for ectopic expression of *gfp* (15). The maximum level of gene expression varied

among constructs with P_{tac} > P_{BAD} > P_{BAD}-riboswitch > P_{tac}-riboswitch (**Fig. 2**). Also, all of these constructs allowed for titratable gene expression (**Fig. 2**). This is particularly notable for P_{BAD}, because this inducible system is known to have an "all-or-none" or autocatalytic gene expression phenotype in wildtype strains of *E. coli* (16). This autocatalytic expression profile is due to high affinity transport of arabinose in *E. coli*, which further stimulates increased expression of arabinose transporters. Uncoupling this autoregulatory loop in *E. coli* can allow for titratable gene expression (17). *V. cholerae* does not catabolize arabinose and lacks high affinity arabinose transporters. Arabinose may be transported into *V. cholerae* nonspecifically through one (or more) of its other carbohydrate transporters. Regardless, this low affinity transport of arabinose in *V. cholerae* allows for titratable gene expression from P_{BAD} (**Fig. 2**), which is consistent with a number of previous studies (18, 19). Also, for constructs that contained the additional riboswitch control element (P_{tac}-riboswitch and P_{BAD}-riboswitch), ectopic gene expression was dependent on addition of theophylline (**Fig. 2**), as expected (5).

Testing leakiness of ectopic expression constructs with Flp recombinase

A major consideration for ectopic expression constructs is leakiness, which is defined as the basal expression of regulated genes in the absence of inducer. As a first indication of whether any of our *gfp* expression constructs were leaky, we simply assessed GFP expression in cells without inducer added. These data clearly show that the P_{tac} promoter is very leaky in *V. cholerae* (**Fig. 2E**), which was already previously widely appreciated. The other constructs did not exhibit clear signs of leakiness (**Fig. 2E**), however, GFP is a poor readout for leaky gene expression because a substantial amount of GFP protein is required to generate an observable fluorescent readout. We sought to develop a sensitive and easily measured phenotype for leakiness from our ectopic expression constructs. To that end, we employed flippase (Flp), a highly-efficient recombinase that can mediate site-specific recombination between two Flp recombinase target (FRT) sequences (20, 21). Flanking FRT sequences can be engineered to leave behind an in-frame scar following Flp excision (22). To generate a simple readout for Flp-mediated activity, we introduced a FRT-flanked Ab^R into the *lacZ* gene in *V. cholerae* (**Fig. 3A**). Strains with *lacZ*::FRT-Ab^R-FRT yielded a white colony phenotype on X-gal plates. Following Flp-mediated excision, however, the resulting *lacZ* gene (containing an in-frame 81 bp insertion) is active, and strains harboring *lacZ*::FRT exhibit a blue colony phenotype on X-gal plates (**Fig. 3A**). Thus, following Flp-mediated resolution, cells are irreversibly converted from LacZ- (white colonies) to LacZ+ (blue colonies). To determine whether our expression constructs exhibited leaky expression, we generated ectopic expression constructs to drive Flp expression in strains

135 that harbored the *lacZ*::FRT-Ab^R-FRT construct. P$_{tac}$-*Flp* was so leaky that all cells where we
136 introduced this construct resolved *lacZ*::FRT-Ab^R-FRT to yield only blue colonies even in the
137 absence of inducer. All of the other constructs (P$_{tac}$-riboswitch-*Flp*, P$_{BAD}$-*Flp*, and P$_{BAD}$-
138 riboswitch-*Flp*) yielded only resolved blue colonies when grown in the presence of inducer. In
139 the absence of inducer, both P$_{tac}$-riboswitch-*Flp* and P$_{BAD}$-*Flp* exhibited some degree of
140 leakiness, while P$_{BAD}$-riboswitch-*Flp* did not exhibit any detectable leakiness in this assay (**Fig.**
141 **3B**). It is notable that the limit of detection of this assay is ~3 logs below the leakiness observed
142 from the P$_{BAD}$ promoter, a construct that is traditionally considered tightly repressed in the
143 absence of inducer (2, 3). This further validates our Flp-based assay as a highly sensitive
144 approach to assess promoter leakiness.
145
146 *Employing ectopic expression constructs to study the dynamic activity of type IV competence*
147 *pili in V. cholerae*
148 Horizontal gene transfer by natural transformation in *V. cholerae* is dependent on type IV
149 competence pili (23, 24). These pili extend from the bacterial surface, bind to DNA in the
150 environment, and then retract to pull DNA across the outer membrane (23). This ingested DNA
151 can then be translocated into the cytoplasm and integrated into the bacterial genome by
152 homologous recombination. PilB is the motor ATPase that is required for extension of type IV
153 competence pili (25). To study the role of PilB in dynamic pilus activity, we sought to establish a
154 strain that allowed for titratable and tightly regulated control of pilus extension. To that end, we
155 generated strains where the native copy of *pilB* was deleted, and *pilB* expression was
156 ectopically driven by our expression constructs. We then tested whether these strains were
157 naturally transformable when grown without any inducer added. Only leaky expression of *pilB*
158 would allow for natural transformation in this assay because Δ*pilB* mutants are not
159 transformable (**Fig. 4A**). As observed using our Flp reporter readout, in the absence of inducer,
160 P$_{tac}$, P$_{tac}$-riboswitch, and P$_{BAD}$ all exhibited leaky expression of *pilB* as evidenced by detectable
161 natural transformation, while there was no detectable leakiness observed for P$_{BAD}$-riboswitch
162 because no transformants were obtained in this background without inducer added (**Fig. 4A**).
163 Importantly, this experiment was performed in plain LB medium, thus, induction of catabolite
164 repression (by the addition of glucose to the medium) was not necessary to prevent leaky gene
165 expression. As expected, all strains transformed at high rates in the presence of inducer (**Fig.**
166 **4A**). These results suggest that leaky expression of *pilB* from P$_{tac}$, P$_{BAD}$, and P$_{tac}$-riboswitch
167 allow for some degree of pilus assembly even without inducer added, while pilus assembly is
168 completely inhibited in the P$_{BAD}$-riboswitch construct when no inducer is present. To test this

169 idea further, we deleted the retraction ATPase *pilT* in these strains. This prevents extended pili
170 from being easily retracted and sensitizes the direct observation of pilus assembly via a recently
171 developed pilus labeling approach (26). To determine whether leaky *pilB* expression allowed for
172 pilus assembly, we assessed piliation in strains that were grown in the absence of inducer.
173 Indeed, for P_{tac}, P_{BAD}, and P_{tac}-riboswitch, we observed cells that contained extended pilus fibers
174 (**Fig. 4B**), which is consistent with the leaky expression detected using our Flp recombinase
175 reporter (**Fig. 3B**). We did not, however, observe extended pili in strains with P_{BAD}-riboswitch
176 when grown without inducer (**Fig. 4B**), which is consistent with a lack of leaky expression for
177 this construct (**Fig. 3B**). As expected, all strains generated extended pili when grown with the
178 appropriate inducer (**Fig. 4B**).
179
180 Together, these data indicate that only our newly generated P_{BAD}-riboswitch-*pilB* construct
181 allows for tightly regulated and titratable control of pilus biogenesis / extension in *V. cholerae*.
182 This provides a valuable resource that will be critical for addressing diverse questions related to
183 type IV pilus biology, which will be the focus of future work.
184
185 **Methods**
186 *Bacterial strains and growth conditions*
187 All strains used in this study are derivates of E7946, an El Tor isolate of *V. cholerae* (27). See
188 **Table S1** for a complete list of strains used in this study. Strains were routinely grown at 30°C or
189 37°C in LB Miller broth and agar (BD Difco). When appropriate, media was supplemented with
190 carbenicillin (20 µg/mL), spectinomycin (200 µg/mL), kanamycin (50 µg/mL), trimethoprim (10
191 µg/mL), chloramphenicol (1 µg/mL), or erythromycin (10 µg/mL).
192
193 *Construction of mutant strains*
194 All strains were generated by SOE PCR and chitin-induced natural transformation exactly as
195 previously described (8, 28). See **Fig. S1** for details on how the ectopic expression constructs
196 were assembled and **Table S2** for a detailed list of all primers used to generate all of the mutant
197 constructs in this study. The *araC* – P_{BAD} region for our P_{BAD} and P_{BAD}-riboswitch constructs was
198 amplified from pBAD18-Kan (3). The P_{tac}-riboswitch construct was amplified from DNA
199 generously provided by Kim Seed (29).
200
201 *GFP fluorescence assays*

202 Cells harboring ectopic expression constructs driving *gfp* were grown rolling at 30°C to mid-log
203 in LB medium. Then, inducer was added as indicated in each experiment and cells were grown
204 for two additional hours rolling at 30°C. Next, cells were washed and resuspended to the same
205 optical density in instant ocean medium (7 g/L; Aquarium Systems) and fluorescence was
206 measured on a Biotek H1M plate reader: excitation 500 nm / emission 540 nm exactly as
207 previously described (30). The parent strain lacking any ectopic expression construct was
208 assayed alongside and used to subtract the background fluorescence of cells.
209
210 To image cells for GFP fluorescence, cultures were grown rolling at 30°C to mid-log in LB
211 medium. Then, cells were washed in instant ocean medium and mounted on 0.2% gelzan pads
212 made with instant ocean medium exactly as previously described (31).
213
214 *Flp recombinase assays*
215 Cells harboring ectopic expression constructs driving *Flp* and *lacZ*::FRT-Spec^{R}-FRT were struck
216 out onto LB + X-gal (40 µg/mL) + spectinomycin (200 µg/mL) plates. Single white colonies were
217 picked, inoculated into plain LB medium, and grown overnight rolling at 30°C. Then, each
218 culture was plated quantitatively on LB+Xgal plates to determine the frequency of blue colonies
219 within the population. Empirically, we determined that we could only reliably detect blue colonies
220 at a rate of ~1 in 1,000,000 cells or 0.0001%. This equated to scoring for blue colonies on 100
221 µL spread plates of a dilution of 10^{-3} or greater. If no blue colonies were observed at 10^{-3}, we
222 assumed a single blue colony was present to define the limit of detection for that sample. Data
223 are reported as the % Resolution = (CFU/mL blue colonies / CFU/mL total colonies) x 100.
224
225 *Natural transformation assays*
226 Cells harboring ectopic expression constructs driving *pilB* and the native *pilB* gene deleted were
227 tested for rates of natural transformation. All of these strains also harbored $P_{constitutive}$-*tfoX* and
228 Δ*luxO* mutations, which rendered these strains constitutively competent. Strains were test for
229 natural transformation using chitin-independent transformation assays exactly as previously
230 described (32). The transforming DNA using in these experiments was 100 ng of a 6 kb
231 ΔVC1807::Erm^{R} PCR product.
232
233 *Pilus labeling*
234 All strains harbored the indicated ectopic expression construct, a cysteine amino acid
235 substitution in the major pilin subunit PilA (PilA^{S56C}), a deletion of the native copy of *pilB* (Δ*pilB*),

236 $P_{constitutive}$-*tfoX*, a Δ*luxO* mutation, and a deletion of the retraction ATPase *pilT* (Δ*pilT*). Strains
237 were grown and labeled with Alexa fluor 488-maleimide exactly as previously described (32).
238 And mounted on 0.2% gelzan pads made with instant ocean medium.
239
240 *Microscopy*
241 Phase contrast and fluorescence images were collected on a Nikon Ti-2 microscope using a
242 Plan Apo ×60 objective, a GFP filter cube, a Hamamatsu ORCAFlash 4.0 camera and Nikon
243 NIS Elements imaging software. The lookup tables for each phase and fluorescent image were
244 adjusted to the same range so that they can be compared between samples.
245
246 **Acknowledgements**
247 We gratefully acknowledge Eric Bruger, Christopher Marx, Julia van Kessel, and Johann Strnat
248 for helpful discussions, and Kim Seed for generously providing DNA with the P_{tac}-riboswitch
249 construct. This work was supported by funds from the National Science Foundation (1714949),
250 Department of Energy (DE-SC0019436), and the National Institutes of Health (R35GM128674)
251 to ABD.
252
253 **References**
254 1. de Boer HA, Comstock LJ, Vasser M. 1983. The tac promoter: a functional hybrid derived
255 from the trp and lac promoters. Proc Natl Acad Sci U S A 80:21-5.
256 2. Lee N, Francklyn C, Hamilton EP. 1987. Arabinose-induced binding of AraC protein to
257 araI2 activates the araBAD operon promoter. Proc Natl Acad Sci U S A 84:8814-8.
258 3. Guzman LM, Belin D, Carson MJ, Beckwith J. 1995. Tight regulation, modulation, and
259 high-level expression by vectors containing the arabinose PBAD promoter. J Bacteriol
260 177:4121-30.
261 4. Lynch SA, Gallivan JP. 2009. A flow cytometry-based screen for synthetic riboswitches.
262 Nucleic Acids Res 37:184-92.
263 5. Topp S, Reynoso CM, Seeliger JC, Goldlust IS, Desai SK, Murat D, Shen A, Puri AW,
264 Komeili A, Bertozzi CR, Scott JR, Gallivan JP. 2010. Synthetic riboswitches that induce
265 gene expression in diverse bacterial species. Appl Environ Microbiol 76:7881-4.
266 6. Tschirhart T, Shukla V, Kelly EE, Schultzhaus Z, NewRingeisen E, Erickson JS, Wang Z,
267 Garcia W, Curl E, Egbert RG, Yeung E, Vora GJ. 2019. Synthetic Biology Tools for the Fast-
268 Growing Marine Bacterium Vibrio natriegens. ACS Synth Biol 8:2069-2079.
269 7. Delavat F, Bidault A, Pichereau V, Paillard C. 2018. Rapid and efficient protocol to
270 introduce exogenous DNA in Vibrio harveyi and Pseudoalteromonas sp. J Microbiol
271 Methods 154:1-5.
272 8. Dalia AB. 2018. Natural Cotransformation and Multiplex Genome Editing by Natural
273 Transformation (MuGENT) of Vibrio cholerae. Methods Mol Biol 1839:53-64.

274 9. Simpson CA, Podicheti R, Rusch DB, Dalia AB, van Kessel JC. 2019. Diversity in Natural
275 Transformation Frequencies and Regulation across Vibrio Species. mBio 10.
276 10. Dalia TN, Hayes CA, Stolyar S, Marx CJ, McKinlay JB, Dalia AB. 2017. Multiplex Genome
277 Editing by Natural Transformation (MuGENT) for Synthetic Biology in Vibrio natriegens.
278 ACS Synth Biol 6:1650-1655.
279 11. Chimalapati S, de Souza Santos M, Servage K, De Nisco NJ, Dalia AB, Orth K. 2018.
280 Natural Transformation in Vibrio parahaemolyticus: a Rapid Method To Create Genetic
281 Deletions. J Bacteriol 200.
282 12. Brooks JF, 2nd, Gyllborg MC, Kocher AA, Markey LE, Mandel MJ. 2015. TfoX-based
283 genetic mapping identifies Vibrio fischeri strain-level differences and reveals a common
284 lineage of laboratory strains. J Bacteriol 197:1065-74.
285 13. Visick KL, Hodge-Hanson KM, Tischler AH, Bennett AK, Mastrodomenico V. 2018. Tools
286 for Rapid Genetic Engineering of Vibrio fischeri. Appl Environ Microbiol 84.
287 14. Horton RM, Hunt HD, Ho SN, Pullen JK, Pease LR. 1989. Engineering hybrid genes
288 without the use of restriction enzymes: gene splicing by overlap extension. Gene 77:61-
289 8.
290 15. Cormack BP, Valdivia RH, Falkow S. 1996. FACS-optimized mutants of the green
291 fluorescent protein (GFP). Gene 173:33-8.
292 16. Siegele DA, Hu JC. 1997. Gene expression from plasmids containing the araBAD
293 promoter at subsaturating inducer concentrations represents mixed populations. Proc
294 Natl Acad Sci U S A 94:8168-72.
295 17. Khlebnikov A, Risa O, Skaug T, Carrier TA, Keasling JD. 2000. Regulatable arabinose-
296 inducible gene expression system with consistent control in all cells of a culture. J
297 Bacteriol 182:7029-34.
298 18. Judson N, Mekalanos JJ. 2000. TnAraOut, a transposon-based approach to identify and
299 characterize essential bacterial genes. Nat Biotechnol 18:740-5.
300 19. Lo Scrudato M, Blokesch M. 2012. The regulatory network of natural competence and
301 transformation of Vibrio cholerae. PLoS Genet 8:e1002778.
302 20. Broach JR, Guarascio VR, Jayaram M. 1982. Recombination within the yeast plasmid
303 2mu circle is site-specific. Cell 29:227-34.
304 21. Cox MM. 1983. The FLP protein of the yeast 2-microns plasmid: expression of a
305 eukaryotic genetic recombination system in Escherichia coli. Proc Natl Acad Sci U S A
306 80:4223-7.
307 22. Baba T, Ara T, Hasegawa M, Takai Y, Okumura Y, Baba M, Datsenko KA, Tomita M,
308 Wanner BL, Mori H. 2006. Construction of *Escherichia coli* K-12 in-frame, single-gene
309 knockout mutants: the Keio collection. Mol Syst Biol 2:2006 0008.
310 23. Ellison CK, Dalia TN, Vidal Ceballos A, Wang JC, Biais N, Brun YV, Dalia AB. 2018.
311 Retraction of DNA-bound type IV competence pili initiates DNA uptake during natural
312 transformation in Vibrio cholerae. Nat Microbiol 3:773-780.
313 24. Seitz P, Blokesch M. 2013. DNA-uptake machinery of naturally competent Vibrio
314 cholerae. Proc Natl Acad Sci U S A 110:17987-92.
315 25. Ellison CK, Kan J, Chlebek JL, Hummels KR, Panis G, Viollier PH, Biais N, Dalia AB, Brun YV.
316 2019. A bifunctional ATPase drives tad pilus extension and retraction. Sci Adv
317 5:eaay2591.

318 26. Ellison CK, Dalia TN, Dalia AB, Brun YV. 2019. Real-time microscopy and physical
319 perturbation of bacterial pili using maleimide-conjugated molecules. Nat Protoc
320 doi:10.1038/s41596-019-0162-6:In Press. .
321 27. Miller VL, DiRita VJ, Mekalanos JJ. 1989. Identification of toxS, a regulatory gene whose
322 product enhances toxR-mediated activation of the cholera toxin promoter. J Bacteriol
323 171:1288-93.
324 28. Dalia AB, McDonough E, Camilli A. 2014. Multiplex genome editing by natural
325 transformation. Proc Natl Acad Sci U S A 111:8937-42.
326 29. McKitterick AC, Seed KD. 2018. Anti-phage islands force their target phage to directly
327 mediate island excision and spread. Nat Commun 9:2348.
328 30. Dalia AB. 2016. RpoS is required for natural transformation of Vibrio cholerae through
329 regulation of chitinases. Environ Microbiol 18:3758-3767.
330 31. Dalia AB, Dalia TN. 2019. Spatiotemporal Analysis of DNA Integration during Natural
331 Transformation Reveals a Mode of Nongenetic Inheritance in Bacteria. Cell 179:1499-
332 1511 e10.
333 32. Chlebek JL, Hughes HQ, Ratkiewicz AS, Rayyan R, Wang JCY, Herrin BE, Dalia TN, Biais N,
334 Dalia AB. 2019. PilT and PilU are homohexameric ATPases that coordinate to retract
335 type IVa pili. bioRxiv:doi.org/10.1101/634048.
336

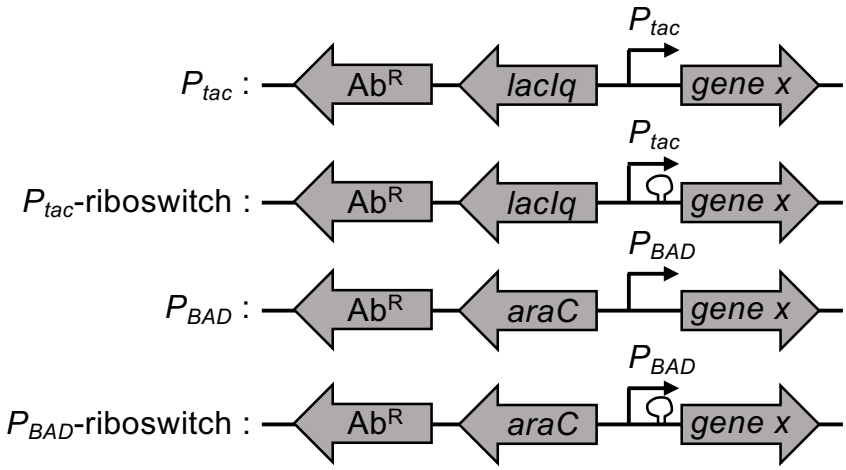

Fig. 1 – *Diagram of ectopic expression constructs*. The four ectopic expression constructs characterized in this study are indicated. All have a linked antibiotic resistance cassette (Ab^R) to facilitate selection during integration into the genome by natural transformation. The gene encoding a transcription factor (*lacIq* or *araC*) and the promoter (P_{tac} or P_{BAD}) required for inducible gene regulation are indicated. The presence of a theophylline-dependent riboswitch is demarcated by a loop before the gene of interest (*gene x*). For details on how these constructs were assembled, see **Fig. S1**.

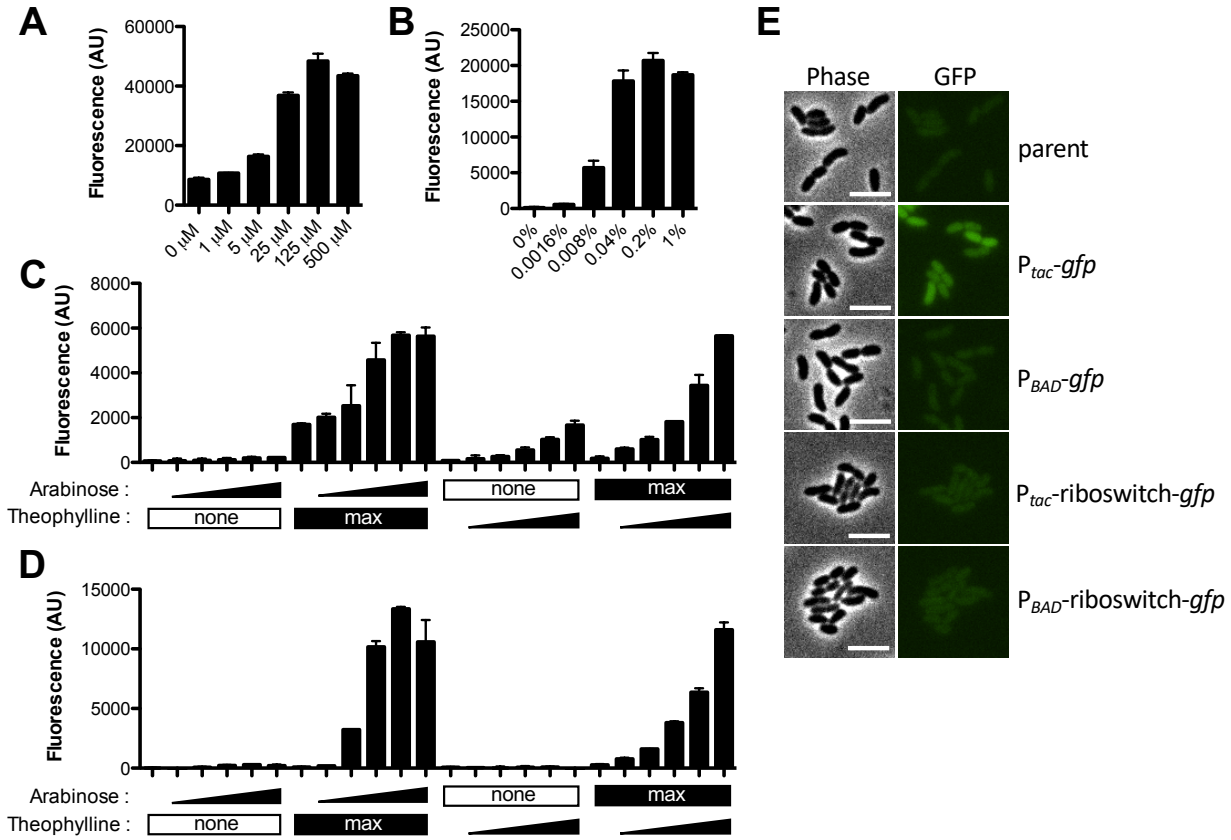

346

347

348 **Fig. 2 – *Testing inducibility of ectopic expression constructs with GFP*.** (**A**-**D**) Cells harboring
349 ectopic expression constructs driving *gfp* were grown with inducer as indicated and assessed for GFP
350 fluorescence. (**A**) Cells with a P_{tac}-*gfp* construct were grown with the indicated amount of IPTG. (**B**) Cells
351 with a P_{BAD}-*gfp* construct were grown with the indicated amount of arabinose. (**C**) Cells with a P_{tac}-
352 riboswitch construct were grown with increasing doses (denoted by a triangle below bars) of IPTG (from
353 left to right: 0 μM, 1 μM, 5 μM, 25 μM, 125 μM, 500 μM) or theophylline (from left to right: 0 mM, 0.018
354 mM, 0.054 mM, 0.16 mM, 0.5 mM, 1.5mM). 'Max' below bars denotes that cells were incubated with the
355 highest concentration of IPTG (500 μM) or theophylline (1.5 mM) as indicated, while 'none' indicates that
356 none of that inducer was added. (**D**) Cells with a P_{BAD}-riboswitch construct were grown with increasing
357 doses (denoted by a triangle below bars) of arabinose (from left to right: 0%, 0.0016%, 0.008%, 0.04%,
358 0.2%, 1%) or theophylline (from left to right: 0 mM, 0.018 mM, 0.054 mM, 0.16 mM, 0.5 mM, 1.5mM).
359 'Max' below bars denotes that cells were incubated with the highest concentration of arabinose (1%) or
360 theophylline (1.5 mM) as indicated, while 'none' indicates that none of that inducer was added. All data in
361 **A**-**D** are from at least two independent biological replicates and shown as the mean ± SD. (**E**)
362 Representative phase and epifluorescence images of cells with the indicated *gfp* expression construct
363 grown to mid-log in LB medium without any inducer added. Scale bar, 4 μm.

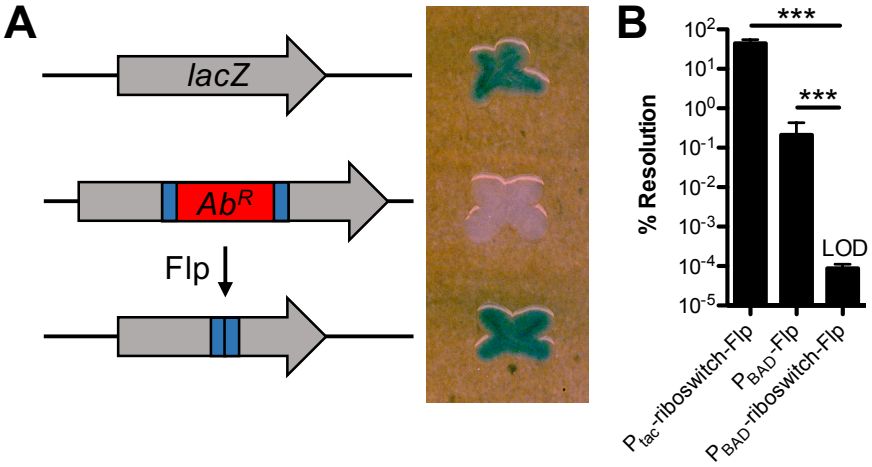

364

365 **Fig. 3 – *Testing leakiness of ectopic expression constructs with Flp recombinase.*** (**A**) Diagram of
366 the approach used to test leakiness in gene expression with Flp recombinase. Wildtype *V. cholerae* cells
367 have intact *lacZ* and form blue colonies on X-gal plates (top). Cells with *lacZ*::FRT-Ab^R-FRT have inactive
368 LacZ and are white on X-gal plates (middle). Flp recombination resolves the FRT-Ab^R-FRT cassette
369 within *lacZ* (making *lacZ*::FRT), which restores LacZ activity (bottom). (**B**) Single colonies of cells
370 harboring the indicated ectopic expression constructs and *lacZ*::FRT-Ab^R-FRT were grown in LB medium
371 without any inducer overnight. Then, % resolution of *lacZ*::FRT-Ab^R-FRT was determined by plating for
372 quantitative culture on X-gal plates. Percent resolution is defined as the number of blue colonies / total
373 CFUs. Data in **B** are from 6 independent biological replicates and shown as the mean ± SD. Statistical
374 comparisons were made by one-way ANOVA with Tukey's post-test. LOD, limit of detection, *** = $P <$
375 0.001.

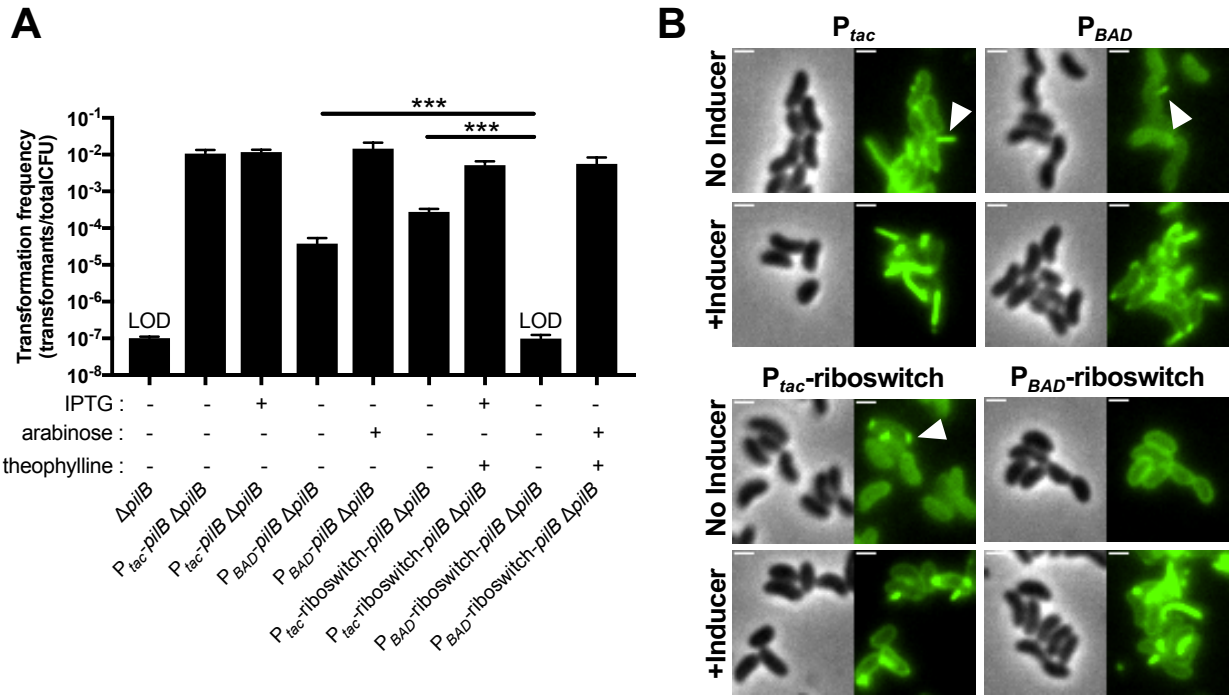

Fig. 4 – *Employing ectopic expression constructs to study the type IV competence pilus extension ATPase PilB.* (**A**) Natural transformation of the indicated strains was tested. IPTG (100 μM), arabinose (0.2%), and/or theophylline (1.5 mM) were added to reactions as indicated below each bar. Data are from at least 3 independent biological replicates and shown as the mean ± SD. Statistical comparisons were made by one-way ANOVA with Tukey's post-test. LOD, limit of detection, *** = $P < 0.001$. (**B**) Representative images of surface piliation. All strains harbor Δ*pilB* and Δ*pilT* mutations at the native locus and the indicated ectopic *pilB* expression construct. Where indicated, cells were grown with inducer as follows: 100 μM IPTG for P_{tac}, 0.2% arabinose for P_{BAD}, 100 μM IPTG + 1.5 mM theophylline for P_{tac}-riboswitch, and 0.2% arabinose + 1.5 mM theophylline for P_{BAD}-riboswitch. Examples of extended pili in no inducer samples are indicated by white arrows. Scale bars, 1 μm.

Supporting Information for

A modular chromosomally integrated toolkit for ectopic gene expression in *Vibrio cholerae*

Triana N. Dalia[1] and Ankur B. Dalia[1,*]

[1]Department of Biology, Indiana University, Bloomington, IN 47405

*Author for correspondence: ankdalia@indiana.edu

This PDF file includes:

Fig.S1
Tables S1-S2

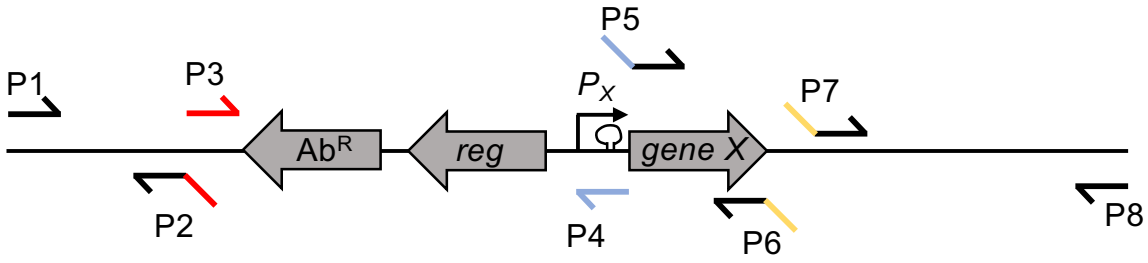

P1: BBC832 - GCTTTTTGCTACAACGACCG
P2: BBC828 - caccatacccacgccgaaacaaCAGTGATGTAGCGAATCGGAC
P3: BBC243 - TTGTTTCGGCGTGGGTATGGTG
P4-1 (P_{tac}-riboswitch or P_{BAD}-riboswitch): BBC2137 - CTTGTTGTTACCTCCTTAGCAGG
P5-1 (P_{tac}-riboswitch or P_{BAD}-riboswitch): cctgctaaggaggtaacaacaagATGXXXXXX
P4-2 (P_{tac} or P_{BAD}): BBC203 - CCCGGGATCCTGTGTGAAATTG
P5-2 (P_{tac} or P_{BAD}): caatttcacacaggatcccggg**AGGAGGT**NNNNNNATGXXXXXX
P6: tgtaggctggagctgcttcTTAYYYYYY
P7: BBC830 - gaagcagctccagcctacaGTTGAGTTGGATGCAGCACC
P8: BBC834 - CACAATTTCTCGCTTAAAATGTCC

Fig. S1 - *Details on how to assemble the ectopic expression constructs and swap out genes of interest.* A generic diagram of the ectopic expression construct is shown with the location of different primers needed to initially construct each expression construct (P1, P2, P3, P6, P7, and P8). As well as the primers to insert novel genes of interest into established expression constructs (P1, P4, P5, P6, P7, and P8). Ab^R = antibiotic resistance cassette, reg = regulatory gene (*lacIq* or *araC*), P_X = the promoter (P_{tac}, P_{BAD}, P_{tac}-riboswitch, or P_{BAD}-riboswitch), and gene X = the gene of interest.

Establishing ectopic expression constructs at new genomic locations: The UP arm of homology is generated with P1 and P2, while the DOWN arm of homology is amplified with P7 and P8. In this example, these primers amplify homology arms to integrate the ectopic expression constructs into *V. cholerae* ChII. P2 and P7 contain tails that overlap any of the 4 ectopic expression constructs. To move intact expression constructs to new locations in the genome, they can be amplified with P3 and P6. This can serve as a MIDDLE arm to stitch to the UP and DOWN arms of homology.

To insert new genes of interest:

Once an ectopic expression construct has been introduced to a genetic locus, the gene of interest can be swapped out.

-To amplify a gene of interest to place within P_{tac}-riboswitch or P_{BAD}-riboswitch the forward P5-1 primer must have a 5' overlap region as indicated. Immediately after this overlap should be the start codon for the gene of interest (highlighted in green) + additional sequence to serve as a primer for the gene of interest (denoted by 'XXXXXX'). P5-1 overlaps with P4-1 (blue highlighted sequence), which sits within the theophylline-dependent riboswitch. Thus, the same overlap can be used to make either P_{tac}-riboswitch or P_{BAD}-riboswitch constructs. The reverse P6 primer for the gene of interest must have the tail indicated, which should be immediately followed by the stop codon of the gene (highlighted in purple – TAA stop codon in this example) + additional sequence to serve as a primer for the gene of interest (denoted by 'YYYYYY').
-To amplify a gene of interest to place within P_{tac} or P_{BAD} the forward P5-2 primer must have the 5' overlap region indicated. Immediately after this overlap should be the desired ribosome binding site (indicated in bold and underline – the 'optimal' RBS AGGAGGT is used in this example), which should be followed by a 6 bp spacer (this spacing between the ribosome binding site and the start codon is essential for optimal translation and can be derived from the native gene) + the start codon (highlighted in green) + additional sequence to serve as a primer for the gene of interest (denoted by 'XXXXXX'). P5-2 overlaps with P4-2 (blue highlighted sequence), which sits downstream of the two promoter elements. Thus, the same overlap can be used to make either P_{tac} or P_{BAD} constructs. The reverse P6 primer for the gene of interest can be made exactly as described above.

All amplified genes of interest serve as MIDDLE arms in SOE reactions with an UP arm amplified with P1 and P4, and a DOWN arm amplified with P7 and P8.

Table S1 – *Strains used in this study*

Name	Relevant figure(s)	Full genotype	Reference / Strain#
parent	Fig. 2E	E7946 *lacZ*::FRT-Spec^R-FRT	This study / SAD035
P_{tac}-*gfp*	Fig. 2A, E	E7946 *lacZ*::FRT-Spec^R-FRT, ΔVCA0692::P_{tac}-*gfp* Carb^R	This study / TND2290 (SAD2780)
P_{BAD}-*gfp*	Fig. 2B, E	E7946 *lacZ*::FRT-Spec^R-FRT, ΔVCA0692::P_{BAD}-*gfp* Carb^R	This study / TND2291 (SAD2781)
P_{tac}-riboswitch-*gfp*	Fig. 2C, E	E7946 *lacZ*::FRT-Spec^R-FRT, ΔVCA0692::P_{tac}-riboswitch-*gfp* Carb^R	This study / TND2293 (SAD2782)
P_{BAD}-riboswitch-*gfp*	Fig. 2D, E	E7946 *lacZ*::FRT-Spec^R-FRT, ΔVCA0692::P_{BAD}-riboswitch-*gfp* Carb^R	This study / TND2292 (SAD2783)
wildtype	Fig. 3A	E7946	(25) / SAD031
P_{BAD}-*Flp*	Fig. 3A-B	E7946 *lacZ*::FRT-Spec^R-FRT, ΔVCA0692::P_{BAD}-*Flp* Carb^R	This study / TND2083 (SAD2784)
P_{tac}-riboswitch-*Flp*	Fig. 3B	E7946 *lacZ*::FRT-Spec^R-FRT, ΔVCA0692::P_{tac}-riboswitch-*Flp* Carb^R	This study / TND2289 (SAD2785)
P_{BAD}-riboswitch-*Flp*	Fig. 3B	E7946 *lacZ*::FRT-Spec^R-FRT, ΔVCA0692::P_{BAD}-riboswitch-*Flp* Carb^R	This study / TND2086 (SAD2786)
Δ*pilB*	Fig. 4A	E7946 Sm^R, P_{const}-tfoX, ΔluxO, *pilA* S67C, *lacZ*::FRT-Kan^R-FRT, ΔVC1807::CmR, Δ*pilB*	This study / TND2373 (SAD2787)
P_{tac}-*pilB* Δ*pilB*	Fig. 4A	E7946 Sm^R, P_{const}-tfoX, ΔluxO, *pilA* S67C, Δ*lacZ*::P_{tac}-*pilB* Spec^R, ΔVC1807::CmR, Δ*pilB*	This study / JLC769 (SAD2788)
P_{BAD}-*pilB* Δ*pilB*	Fig. 4A	E7946 Sm^R, P_{const}-tfoX, ΔluxO, *pilA* S67C, *lacZ*::FRT-Kan^R-FRT, ΔVC1807::CmR, Δ*pilB*, ΔVCA0692::P_{BAD}-*pilB* Carb^R	This study / TND2403 (SAD2789)
P_{tac}-riboswitch-*pilB* Δ*pilB*	Fig. 4A	E7946 Sm^R, P_{const}-tfoX, ΔluxO, *pilA* S67C, *lacZ*::FRT-Kan^R-FRT, ΔVC1807::CmR, Δ*pilB*, ΔVCA0692::P_{tac}-riboswitch-*pilB* Carb^R	This study / TND2402 (SAD2790)
P_{BAD}-riboswitch-*pilB* Δ*pilB*	Fig. 4A	E7946 Sm^R, P_{const}-tfoX, ΔluxO, *pilA* S67C, *lacZ*::FRT-Kan^R-FRT, ΔVC1807::CmR, Δ*pilB*, ΔVCA0692::P_{BAD}-riboswitch-*pilB* Carb^R	This study / TND2378 (SAD2791)
P_{tac}-*pilB* Δ*pilB* Δ*pilT*	Fig. 4B	E7946 Sm^R, P_{const}-tfoX, ΔluxO, *pilA* S67C, Δ*lacZ*::P_{tac}-*pilB* Spec^R, ΔVC1807::CmR, Δ*pilB*, Δ*pilT*::Zeo^R	This study / TND2498
P_{BAD}-*pilB* Δ*pilB* Δ*pilT*	Fig. 4B	E7946 Sm^R, P_{const}-tfoX, ΔluxO, *pilA* S67C, *lacZ*::FRT-Kan^R-FRT, ΔVC1807::CmR, Δ*pilB*, ΔVCA0692::P_{BAD}-*pilB* Carb^R, Δ*pilT*::Zeo^R	This study / TND2501

P_{tac}-riboswitch-*pilB* Δ*pilB* Δ*pilT*	Fig. 4B	E7946 Sm^R, P_{const}-tfoX, ΔluxO, *pilA* S67C, *lacZ*::FRT-Kan^R-FRT, ΔVC1807::CmR, Δ*pilB*, ΔVCA0692::P_{tac}-riboswitch-*pilB* $Carb^R$, Δ*pilT*::Zeo^R	This study / TND2500
P_{BAD}-riboswitch-*pilB* Δ*pilB* Δ*pilT*	Fig. 4B	E7946 Sm^R, P_{const}-tfoX, ΔluxO, *pilA* S67C, *lacZ*::FRT-Kan^R-FRT, ΔVC1807::CmR, Δ*pilB*, ΔVCA0692::P_{BAD}-riboswitch-*pilB* $Carb^R$, Δ*pilT*::Zeo^R	This study / TND2499

Table S2 – *Primers used in this study*

Primer Name	Primer Sequence (5'→3')	Description
BBC832	GCTTTTTGCTACAACGACCG	Replace VCA0692 w/ an ectopic expression construct UP ARM F1 (aka P1 in **Fig. S1**)
BBC828	caccatacccacgccgaaacaaCAGTGATGTAGCGAATCGGAC	Replace VCA0692 w/ an ectopic expression construct UP ARM R1 (aka P2 in **Fig. S1**)
BBC830	gaagcagctccagcctacaGTTGAGTTGGATGCAGCACC	Replace VCA0692 w/ an ectopic expression construct DOWN ARM F2 (aka P7 in **Fig. S1**)
BBC834	CACAATTTCTCGCTTAAAATGTCC	Replace VCA0692 w/ an ectopic expression construct DOWN ARM R2 (aka P8 in **Fig. S1**)
BBC243	TTGTTTCGGCGTGGGTATGGTG	Amplify any ectopic expression construct to move to a new genetic locus F (aka P3 in **Fig. S1**)
BBC203	CCCGGGATCCTGTGTGAAATTG	Primer to clone new ectopic genes into P_{tac} or P_{BAD} constructs R1 (aka P4-2 in **Fig. S1**)
BBC2137	CTTGTTGTTACCTCCTTAGCAGG	Primer to clone new ectopic genes into P_{tac}-riboswitch or P_{BAD}-riboswitch constructs R1 (aka P4-1 in **Fig. S1**)
BBC252	caatttcacacaggatcccgggAGGAGGTAACGTAATGCGTAAAGGAGAAGAAC	F Primer to amplify up *gfp* to clone into P_{tac} or P_{BAD} constructs (aka P5-2 in **Fig. S1**)
BBC2182	cctgctaaggaggtaacaacaagATGCGTAAAGGAGAAGAACTTTTCAC	F Primer to amplify up *gfp* to clone into P_{tac}-riboswitch or P_{BAD}-riboswitch (aka P5-1 in **Fig. S1**)
BBC254	tgtaggctggagctgcttcTTAGTTGTATAGTTCATCCATGCC	R Primer to amplify up *gfp* to clone into any ectopic expression construct (aka P6 in **Fig. S1**)
BBC2427	caatttcacacaggatcccgggAGGAGGTTTTTGTATGCCACAATTTGATATATTATG	F Primer to amplify up *Flp* to clone into P_{tac} or P_{BAD} constructs (aka P5-2 in **Fig. S1**)
BBC2455	cctgctaaggaggtaacaacaagATGCCACAATTTGATATATTATGTAAAAC	F Primer to amplify up *Flp* to clone into P_{tac}-riboswitch or P_{BAD}-riboswitch (aka P5-1 in **Fig. S1**)
BBC2428	tgtaggctggagctgcttcTTATATGCGTCTATTTATGTAGGATG	R Primer to amplify up *Flp* to clone into any ectopic expression construct (aka P6 in **Fig. S1**)
BBC1952	caatttcacacaggatcccgggAGGAGGTTAACTAATGCTCACCAACCTTGTTG	F Primer to amplify up *pilB* to clone into P_{tac} or P_{BAD} constructs (aka P5-2 in **Fig. S1**)
BBC2806	cctgctaaggaggtaacaacaagATGCTCACCAACCTTGTTGC	F Primer to amplify up *pilB* to clone into P_{tac}-riboswitch or P_{BAD}-riboswitch (aka P5-1 in **Fig. S1**)

BBC1953	tgtaggctggagctgcttcTTAAAAGTAGAGCACAC GCTG	R Primer to amplify up *pilB* to clone into any ectopic expression construct (aka P6 in **Fig. S1**)
ABD253	GCGACCCCACCGATGGG	*lacZ*::FRT-Ab^R-FRT F1
ABD263	gtcgacggatccccggaatAACTGATCCAATTTTTC AGCGCATATTTTGG	*lacZ*::FRT-Ab^R-FRT R1
ABD262	gaagcagctccagcctacaTGCCGCAGGAAAACC GCCCCCTaATC	*lacZ*::FRT-Ab^R-FRT F2
ABD256	CCCAAATACGGCAACTTGGCG	*lacZ*::FRT-Ab^R-FRT R2
ABD123	ATTCCGGGGATCCGTCGAC	Amplify any Ab^R cassette F
ABD124	TGTAGGCTGGAGCTGCTTC	Amplify any Ab^R cassette R