A modular chromosomally integrated toolkit for ectopic gene expression in *Vibrio cholerae*

Triana N. Dalia[1] and Ankur B. Dalia[1,*]

[1]Department of Biology, Indiana University, Bloomington, IN 47405

*Author for correspondence: ankdalia@indiana.edu

Abstract

The ability to express genes ectopically in bacteria is essential for diverse academic and industrial applications. Two major considerations when utilizing regulated promoter systems for ectopic gene expression are (1) the ability to titrate gene expression by addition of an exogenous inducer and (2) the leakiness of the promoter element in the absence of the inducer. Also, ectopic gene expression is commonly achieved by use of plasmids, however, many commonly used plasmids are poorly maintained in *Vibrio* species. Here, we describe a modular chromosomally integrated platform for ectopic gene expression in *Vibrio cholerae*. We demonstrate the inducibility of the broadly used promoter elements P_{tac} and P_{BAD}, and compare these to versions that have an additional theophylline-responsive riboswitch (P_{tac}-riboswitch and P_{BAD}-riboswitch). These constructs all exhibited titratable induction of gene expression, however, max induction varied where P_{tac} > P_{BAD} > P_{BAD}-riboswitch > P_{tac}-riboswitch. We also developed two new highly sensitive reporter systems to detect low levels of gene expression. We found that these constructs exhibited differing degrees of leakiness where P_{tac} > P_{tac}-riboswitch > P_{BAD}, and one construct, P_{BAD}-riboswitch, exhibited no detectable leakiness. Thus, the modular chromosomally integrated toolkit for ectopic gene expression described here should be broadly valuable for the study of *Vibrio cholerae*. Also, these constructs should be easily transferrable to other naturally transformable species.

Importance

The genetic study of bacteria is greatly eased by the use of promoter systems that allow for the controlled expression of genes in the presence of defined molecules called inducers. Ideally these control systems allow absolute control of gene expression, including a lack of expression in the absence of inducer and high levels of expression in the presence of inducer. Here, we

characterize four promoter systems for controlled regulation of genes in *Vibrio cholerae*. We find that all four of these systems allow for differing levels of expression in the presence of inducer. And in the absence of inducer we find that one of these promoter systems allows for no detectable expression. This promoter system, and the tools we developed to study these promoters systems, should be broadly valuable to the field.

Introduction

Regulated promoter systems for ectopic gene expression have been widely used in bacterial systems. Two commonly employed system for ectopic gene expression are the isopropyl β-d-1-thiogalactopyranoside (IPTG)-inducible *tac* promoter (P_{tac}) and the arabinose inducible *araBAD* promoter (P_{BAD}) (1, 2). Both of these systems, however, exhibit some degree of leakiness, which allows for gene expression in the absence of the inducer when cells are grown in rich LB medium. Leakiness of P_{BAD} can be reduced, to some extent, by addition of glucose to the growth medium because this promoter is catabolite repressed (3), however, addition of glucose to the growth medium can change the physiology of cells which may introduce a confounding variable for some experiments.

Riboswitches are control elements that can regulate gene expression via direct interactions between a small molecule ligand and mRNA. Synthetic riboswitches that are responsive to the small molecule theophylline have recently been developed, which allow for regulated gene expression in diverse biological systems (4, 5). These riboswitch elements likely fold the mRNA to occlude the ribosome binding site in the absence of theophylline. And binding of theophylline to the riboswitch alters the conformation of the mRNA to expose the ribosome binding site and allow for translation of the downstream gene.

Generally, plasmids are employed for ectopic gene expression. However, many commonly used plasmids are poorly maintained by *Vibrio* species and/or their copy number can vary relative to model systems like *Escherichia coli* (6, 7). Integration of ectopic expression constructs onto the genome can bypass these issues. For many *Vibrio* species (e.g. *Vibrio cholerae*, *Vibrio natriegens*, *Vibrio campbellii*, *Vibrio vulnificus*, *Vibrio parahaemolyticus*, and *Vibrio fischeri*), it is remarkably easy to integrate novel sequences into the bacterial genome by exploiting their natural capacity to undergo horizontal gene transfer by natural transformation (8-13).

66 Here, we generate a chromosomally integrated modular platform for ectopic gene expression in
67 *Vibrio* species based on the P_{tac} and P_{BAD} promoters in conjunction with a previously described
68 theophylline responsive riboswitch (5). We demonstrate that this toolkit allows for differing levels
69 of ectopic gene expression (i.e. max induction), and that one of these promoter constructs
70 (P_{BAD}-riboswitch) allows for titratable gene expression without detectable leakiness.
71
72 **Results & Discussion**
73 *Design of modular ectopic expression constructs*
74 All of the ectopic expression constructs are distinct 'cassettes' that can be integrated at any
75 location in the bacterial genome (**Fig. 1**). We accomplish this via simple splicing by overlap
76 extension (SOE) PCR (14) to stitch these expression cassettes to upstream and downstream
77 regions of homology (see **Fig. S1** for details) to generate linear PCR products that can then be
78 integrated into the *V. cholerae* genome by chitin-induced natural transformation (8). Once an
79 expression construct is integrated at a genomic locus, the gene of interest to be ectopically
80 expressed can be easily exchanged by SOE PCR and natural transformation (see **Fig. S1** for
81 details).
82
83 The constructs for ectopic gene expression have a modular design where all have a linked
84 antibiotic resistance marker (Ab^R) (**Fig. 1**). This Ab^R facilitates selection during integration into
85 the genome by natural transformation and can be easily altered depending on the need. Linked
86 to this Ab^R, there are the gene control elements. For P_{tac} and P_{tac}-riboswitch constructs, this
87 includes the LacIq repressor and *tac* promoter. By contrast the P_{BAD} and P_{BAD}-riboswitch
88 constructs contain AraC and the *araBAD* promoter. Both the P_{tac} and P_{BAD} promoter constructs
89 can be engineered to have a user-defined ribosome binding site (**Fig. S1**). While the two
90 riboswitch constructs (P_{tac}-riboswitch and P_{BAD}-riboswitch) contain a defined ribosome binding
91 site within the theophylline-dependent riboswitch (riboswitch "E" in (5)) located immediately
92 upstream of the gene of interest (**Fig. 1** and **Fig. S1**).
93
94 *Testing inducibility of ectopic expression constructs with GFP*
95 To test whether these different chromosomally integrated constructs allow for inducible gene
96 expression and to compare the maximum level of expression they support, we generated
97 constructs for ectopic expression of *gfp* (15). The maximum level of gene expression varied
98 among constructs with P_{tac} > P_{BAD} > P_{BAD}-riboswitch > P_{tac}-riboswitch (**Fig. 2**). Also, all of these
99 constructs allowed for titratable gene expression (**Fig. 2**). This is particularly notable for P_{BAD},

100 because this inducible system is known to have an “all-or-none” or autocatalytic gene
101 expression phenotype in wildtype strains of *E. coli* (16). This autocatalytic expression profile is
102 due to high affinity transport of arabinose in *E. coli*, which further stimulates increased
103 expression of arabinose transporters. Uncoupling this autoregulatory loop in *E. coli* can allow for
104 titratable gene expression (17). *V. cholerae* does not catabolize arabinose and lacks high affinity
105 arabinose transporters. Arabinose may be transported into *V. cholerae* nonspecifically through
106 one (or more) of its other carbohydrate transporters. Regardless, this low affinity transport of
107 arabinose in *V. cholerae* allows for titratable gene expression from P_{BAD} (**Fig. 2**), which is
108 consistent with a number of previous studies (18, 19). Also, for constructs that contained the
109 additional riboswitch control element (P_{tac}-riboswitch and P_{BAD}-riboswitch), ectopic gene
110 expression was dependent on addition of theophylline (**Fig. 2**), as expected (5).
111
112 *Testing leakiness of ectopic expression constructs with Flp recombinase*
113 A major consideration for ectopic expression constructs is leakiness, which is defined as the
114 basal expression of regulated genes in the absence of inducer. As a first indication of whether
115 any of our *gfp* expression constructs were leaky, we simply assessed GFP expression in cells
116 without inducer added. These data clearly show that the P_{tac} promoter is very leaky in *V.*
117 *cholerae* (**Fig. 2E**), which was already previously widely appreciated. The other constructs did
118 not exhibit clear signs of leakiness (**Fig. 2E**), however, GFP is a poor readout for leaky gene
119 expression because a substantial amount of GFP protein is required to generate an observable
120 fluorescent readout. We sought to develop a sensitive and easily measured phenotype for
121 leakiness form our ectopic expression constructs. To that end, we employed flippase (Flp), a
122 highly-efficient recombinase that can mediate site-specific recombination between two Flp
123 recombinase target (FRT) sequences (20, 21). Flanking FRT sequences can be engineered to
124 leave behind an in-frame scar following Flp excision (22). To generate a simple readout for Flp-
125 mediated activity, we introduced a FRT-flanked Ab^R into the *lacZ* gene in *V. cholerae* (**Fig. 3A**).
126 Strains with *lacZ*::FRT-Ab^R-FRT yielded a white colony phenotype on X-gal plates. Following
127 Flp-mediated excision, however, the resulting *lacZ* gene (containing an in-frame 81 bp insertion)
128 is active, and strains harboring *lacZ*::FRT exhibit a blue colony phenotype on X-gal plates (**Fig.**
129 **3A**). Thus, following Flp-mediated resolution, cells are irreversibly converted from LacZ- (white
130 colonies) to LacZ+ (blue colonies). To determine whether our expression constructs exhibited
131 leaky expression, we generated ectopic expression constructs to drive Flp expression in strains
132 that harbored the *lacZ*::FRT-Ab^R-FRT construct. P_{tac}-*Flp* was sufficiently leaky that all cells
133 where we introduced this construct resolved *lacZ*::FRT-Ab^R-FRT to yield only blue colonies even

134 in the absence of inducer. All of the other constructs (P_{tac}-riboswitch-*Flp*, P_{BAD}-*Flp*, and P_{BAD}-
135 riboswitch-*Flp*) yielded only resolved blue colonies when grown in the presence of inducer. In
136 the absence of inducer, both P_{tac}-riboswitch-*Flp* and P_{BAD}-*Flp* exhibited some degree of
137 leakiness, while P_{BAD}-riboswitch-*Flp* did not exhibit any detectable leakiness in this assay (**Fig.**
138 **3B**). It is notable that the limit of detection of this assay is ~3 logs below the leakiness observed
139 from the P_{BAD} promoter, a construct that is traditionally considered tightly repressed in the
140 absence of inducer (2, 3). This further validates our Flp-based assay as a highly-sensitive
141 approach to assess promoter leakiness.
142
143 *Testing leakiness of ectopic expression constructs with PilB ATPase*
144 We also developed a second readout to test leakiness. Horizontal gene transfer by natural
145 transformation in *V. cholerae* is dependent on type IV competence pili (23, 24). These pili
146 extend from the bacterial surface, bind to DNA in the environment, and then retract to pull DNA
147 across the outer membrane (23). This ingested DNA can then be translocated into the
148 cytoplasm and integrated into the bacterial genome by homologous recombination. PilB is the
149 motor ATPase that is required for extension of type IV competence pili. Empirically, we have
150 found that very little PilB is required to support natural transformation in *V. cholerae*. Thus,
151 ectopic expression of PilB is an independent and useful readout for leakiness. To test this, we
152 generated strains where the native copy of *pilB* was deleted, and *pilB* expression was
153 ectopically driven by our expression constructs. We then tested whether these strains were
154 naturally transformable when grown without any inducer. Only leaky expression of *pilB* would
155 allow for natural transformation in this assay because *pilB* mutants are not transformable (**Fig.**
156 **4**). As observed using our Flp readout, in the absence of inducer, P_{tac}, P_{tac}-riboswitch, and P_{BAD}
157 exhibited leaky expression of *pilB*, while there was no detectable leakiness observed for P_{BAD}-
158 riboswitch (**Fig. 4**). Importantly, this experiment was performed in plain LB medium, thus,
159 induction of catabolite repression (by the addition of glucose to the medium) was not necessary
160 to prevent leaky gene expression. In the presence of the appropriate inducer, all strains
161 transformed at high rates indicating that PilB was appropriately expressed. Again, it is notable
162 that the limit of detection of this assay is ~2.5 logs below the leakiness observed from the P_{BAD}
163 promoter, which validates this assay as a sensitive way to assess promoter leakiness. In
164 addition to serving as a sensitive readout for promoter leakiness, P_{BAD}-riboswitch-*pilB* also
165 highlights one potential biological use for this tightly regulated expression construct. In this case,
166 for studying the dynamic activity of competence pili in *V. cholerae*.
167

168 **Methods**

169 *Bacterial strains and growth conditions*

170 All strains used in this study are derivates of E7946, an El Tor isolate of *V. cholerae* (25). See
171 **Table S1** for a complete list of strains used in this study. Strains were routinely grown at 30°C or
172 37°C in LB Miller broth and agar (BD Difco). When appropriate, media was supplemented with
173 carbenicillin (20 µg/mL), spectinomycin (200 µg/mL), kanamycin (50 µg/mL), trimethoprim (10
174 µg/mL), chloramphenicol (1 µg/mL), or erythromycin (10 µg/mL).

175

176 *Construction of mutant strains*

177 All strains were generated by SOE PCR and chitin-induced natural transformation exactly as
178 previously described (8, 26). See **Fig. S1** for details on how the ectopic expression constructs
179 were assembled and **Table S2** for a detailed list of all primers used to generate all of the mutant
180 constructs in this study. The *araC* – P_{BAD} region for our P_{BAD} and P_{BAD}-riboswitch constructs was
181 amplified from pBAD18-Kan (3). The P_{tac}-riboswitch construct was amplified from DNA
182 generously provided by Kim Seed (27).

183

184 *GFP fluorescence assays*

185 Cells harboring ectopic expression constructs driving *gfp* were grown rolling at 30°C to mid-log
186 in LB medium. Then, inducer was added as indicated in each experiment and cells were grown
187 for two additional hours rolling at 30°C. Next, cells were washed and resuspended to the same
188 optical density in instant ocean medium (7 g/L; Aquarium Systems) and fluorescence was
189 measured on a Biotek H1M plate reader: excitation 500 nm / emission 540 nm exactly as
190 previously described (28). The parent strain lacking any ectopic expression construct was
191 assayed alongside and used to subtract the background fluorescence of cells.

192

193 To image cells for GFP fluorescence, cultures were grown rolling at 30°C to mid-log in LB
194 medium. Then, cells were washed in instant ocean medium and mounted on 0.2% gelzan pads
195 made with instant ocean medium exactly as previously described (29). Phase contrast and
196 fluorescence images were collected on a Nikon Ti-2 microscope using a Plan Apo ×60
197 objective, a GFP filter cube, a Hamamatsu ORCAFlash 4.0 camera and Nikon NIS Elements
198 imaging software.

199

200 *Flp recombinase assays*

201 Cells harboring ectopic expression constructs driving *Flp* and *lacZ*::FRT-Spec^R-FRT were struck
202 out onto LB + X-gal (40 µg/mL) + spectinomycin (200 µg/mL) plates. Single white colonies were
203 picked, inoculated into plain LB medium, and grown overnight rolling at 30°C. Then, each
204 culture was plated quantitatively on LB+Xgal plates to determine the frequency of blue colonies
205 within the population. Empirically, we determined that we could only reliably detect blue colonies
206 at a rate of ~1 in 1,000,000 cells or 0.0001%. This equated to scoring for blue colonies on 100
207 µL spread plates of a dilution of 10^{-3} or greater. If no blue colonies were observed at 10^{-3}, we
208 assumed a single blue colony was present to define the limit of detection for that sample. Data
209 are reported as the % Resolution = (CFU/mL blue colonies / CFU/mL total colonies) x 100.
210
211 *Natural transformation assays*
212 Cells harboring ectopic expression constructs driving *pilB* and the native *pilB* gene deleted were
213 tested for rates of natural transformation. All of these strains also harbored $P_{constitutive}$-*tfoX* and
214 Δ*luxO* mutations, which rendered these strains constitutively competent. Strains were test for
215 natural transformation using chitin-independent transfomormation assays exactly as previously
216 described (30). The transforming DNA using in these experiments was 100 ng of a 6 kb
217 ΔVC1807::Erm^R PCR product.
218

219 **Acknowledgements**
220 We gratefully acknowledge Eric Bruger, Christopher Marx, Julia van Kessel, and Johann Strnat
221 for helpful discussions, and Kim Seed for generously providing DNA with the P_{tac}-riboswitch
222 construct. This work was supported by funds from the National Science Foundation (1714949),
223 Department of Energy (DE-SC0019436), and the National Institutes of Health (R35GM128674)
224 to ABD.
225

226 **References**

227 1. de Boer HA, Comstock LJ, Vasser M. 1983. The tac promoter: a functional hybrid derived
228 from the trp and lac promoters. Proc Natl Acad Sci U S A 80:21-5.
229 2. Lee N, Francklyn C, Hamilton EP. 1987. Arabinose-induced binding of AraC protein to
230 araI2 activates the araBAD operon promoter. Proc Natl Acad Sci U S A 84:8814-8.
231 3. Guzman LM, Belin D, Carson MJ, Beckwith J. 1995. Tight regulation, modulation, and
232 high-level expression by vectors containing the arabinose PBAD promoter. J Bacteriol
233 177:4121-30.
234 4. Lynch SA, Gallivan JP. 2009. A flow cytometry-based screen for synthetic riboswitches.
235 Nucleic Acids Res 37:184-92.

236 5. Topp S, Reynoso CM, Seeliger JC, Goldlust IS, Desai SK, Murat D, Shen A, Puri AW,
237 Komeili A, Bertozzi CR, Scott JR, Gallivan JP. 2010. Synthetic riboswitches that induce
238 gene expression in diverse bacterial species. Appl Environ Microbiol 76:7881-4.
239 6. Tschirhart T, Shukla V, Kelly EE, Schultzhaus Z, NewRingeisen E, Erickson JS, Wang Z,
240 Garcia W, Curl E, Egbert RG, Yeung E, Vora GJ. 2019. Synthetic Biology Tools for the Fast-
241 Growing Marine Bacterium Vibrio natriegens. ACS Synth Biol 8:2069-2079.
242 7. Delavat F, Bidault A, Pichereau V, Paillard C. 2018. Rapid and efficient protocol to
243 introduce exogenous DNA in Vibrio harveyi and Pseudoalteromonas sp. J Microbiol
244 Methods 154:1-5.
245 8. Dalia AB. 2018. Natural Cotransformation and Multiplex Genome Editing by Natural
246 Transformation (MuGENT) of Vibrio cholerae. Methods Mol Biol 1839:53-64.
247 9. Simpson CA, Podicheti R, Rusch DB, Dalia AB, van Kessel JC. 2019. Diversity in Natural
248 Transformation Frequencies and Regulation across Vibrio Species. mBio 10.
249 10. Dalia TN, Hayes CA, Stolyar S, Marx CJ, McKinlay JB, Dalia AB. 2017. Multiplex Genome
250 Editing by Natural Transformation (MuGENT) for Synthetic Biology in Vibrio natriegens.
251 ACS Synth Biol 6:1650-1655.
252 11. Chimalapati S, de Souza Santos M, Servage K, De Nisco NJ, Dalia AB, Orth K. 2018.
253 Natural Transformation in Vibrio parahaemolyticus: a Rapid Method To Create Genetic
254 Deletions. J Bacteriol 200.
255 12. Brooks JF, 2nd, Gyllborg MC, Kocher AA, Markey LE, Mandel MJ. 2015. TfoX-based
256 genetic mapping identifies Vibrio fischeri strain-level differences and reveals a common
257 lineage of laboratory strains. J Bacteriol 197:1065-74.
258 13. Visick KL, Hodge-Hanson KM, Tischler AH, Bennett AK, Mastrodomenico V. 2018. Tools
259 for Rapid Genetic Engineering of Vibrio fischeri. Appl Environ Microbiol 84.
260 14. Horton RM, Hunt HD, Ho SN, Pullen JK, Pease LR. 1989. Engineering hybrid genes
261 without the use of restriction enzymes: gene splicing by overlap extension. Gene 77:61-
262 8.
263 15. Cormack BP, Valdivia RH, Falkow S. 1996. FACS-optimized mutants of the green
264 fluorescent protein (GFP). Gene 173:33-8.
265 16. Siegele DA, Hu JC. 1997. Gene expression from plasmids containing the araBAD
266 promoter at subsaturating inducer concentrations represents mixed populations. Proc
267 Natl Acad Sci U S A 94:8168-72.
268 17. Khlebnikov A, Risa O, Skaug T, Carrier TA, Keasling JD. 2000. Regulatable arabinose-
269 inducible gene expression system with consistent control in all cells of a culture. J
270 Bacteriol 182:7029-34.
271 18. Judson N, Mekalanos JJ. 2000. TnAraOut, a transposon-based approach to identify and
272 characterize essential bacterial genes. Nat Biotechnol 18:740-5.
273 19. Lo Scrudato M, Blokesch M. 2012. The regulatory network of natural competence and
274 transformation of Vibrio cholerae. PLoS Genet 8:e1002778.
275 20. Broach JR, Guarascio VR, Jayaram M. 1982. Recombination within the yeast plasmid
276 2mu circle is site-specific. Cell 29:227-34.
277 21. Cox MM. 1983. The FLP protein of the yeast 2-microns plasmid: expression of a
278 eukaryotic genetic recombination system in Escherichia coli. Proc Natl Acad Sci U S A
279 80:4223-7.

280 22. Baba T, Ara T, Hasegawa M, Takai Y, Okumura Y, Baba M, Datsenko KA, Tomita M,
281 Wanner BL, Mori H. 2006. Construction of *Escherichia coli* K-12 in-frame, single-gene
282 knockout mutants: the Keio collection. Mol Syst Biol 2:2006 0008.
283 23. Ellison CK, Dalia TN, Vidal Ceballos A, Wang JC, Biais N, Brun YV, Dalia AB. 2018.
284 Retraction of DNA-bound type IV competence pili initiates DNA uptake during natural
285 transformation in Vibrio cholerae. Nat Microbiol 3:773-780.
286 24. Seitz P, Blokesch M. 2013. DNA-uptake machinery of naturally competent Vibrio
287 cholerae. Proc Natl Acad Sci U S A 110:17987-92.
288 25. Miller VL, DiRita VJ, Mekalanos JJ. 1989. Identification of toxS, a regulatory gene whose
289 product enhances toxR-mediated activation of the cholera toxin promoter. J Bacteriol
290 171:1288-93.
291 26. Dalia AB, McDonough E, Camilli A. 2014. Multiplex genome editing by natural
292 transformation. Proc Natl Acad Sci U S A 111:8937-42.
293 27. McKitterick AC, Seed KD. 2018. Anti-phage islands force their target phage to directly
294 mediate island excision and spread. Nat Commun 9:2348.
295 28. Dalia AB. 2016. RpoS is required for natural transformation of Vibrio cholerae through
296 regulation of chitinases. Environ Microbiol 18:3758-3767.
297 29. Dalia AB, Dalia TN. 2019. Spatiotemporal Analysis of DNA Integration during Natural
298 Transformation Reveals a Mode of Nongenetic Inheritance in Bacteria. Cell 179:1499-
299 1511 e10.
300 30. Chlebek JL, Hughes HQ, Ratkiewicz AS, Rayyan R, Wang JCY, Herrin BE, Dalia TN, Biais N,
301 Dalia AB. 2019. PilT and PilU are homohexameric ATPases that coordinate to retract
302 type IVa pili. bioRxiv:doi.org/10.1101/634048.
303

304

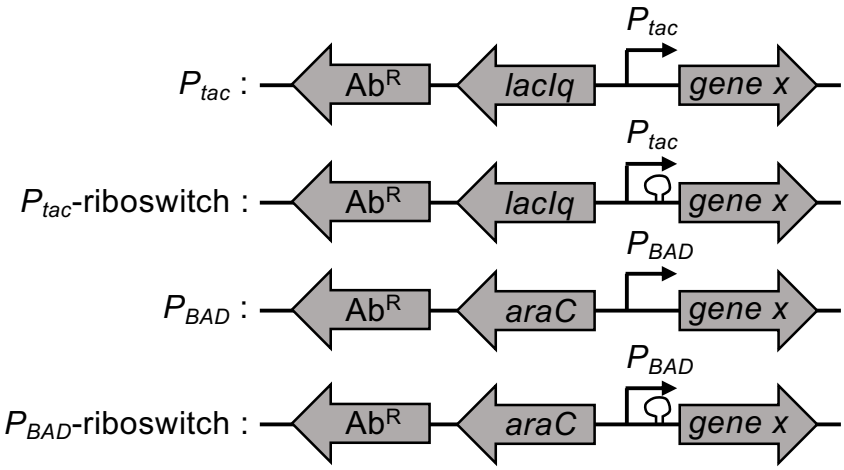

305

306

307 **Fig. 1 – *Diagram of ectopic expression constructs*.** The four ectopic expression constructs
308 characterized in this study are indicated. All have a linked antibiotic resistance cassette (Ab^R) to facilitate
309 selection during integration into the genome by natural transformation. The gene encoding a transcription
310 factor (*lacIq* or *araC*) and the promoter (P_{tac} or P_{BAD}) required for inducible gene regulation are indicated.
311 The presence of a theophylline-dependent riboswitch is demarcated by a loop before the gene of interest
312 (*gene x*). For details on how these constructs were assembled, see **Fig. S1**.

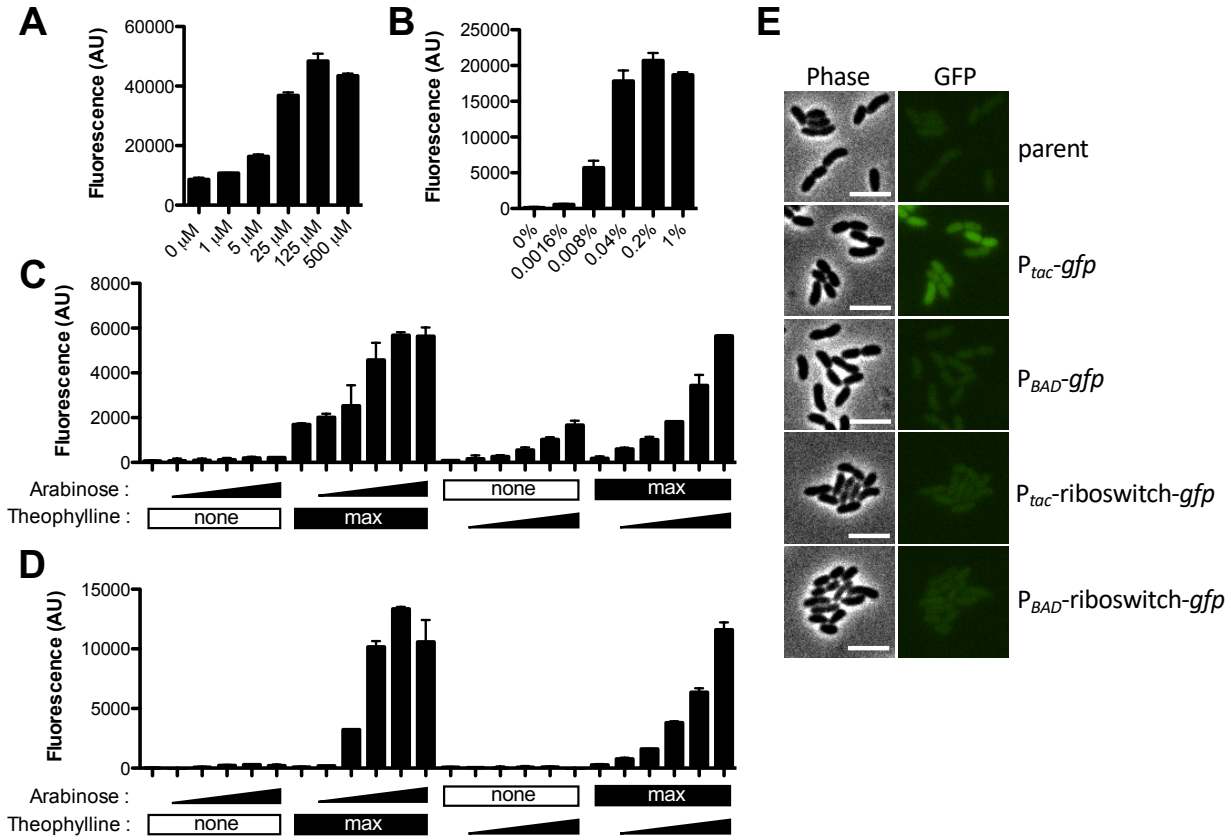

Fig. 2 – *Testing inducibility of ectopic expression constructs with GFP*. (**A**-**D**) Cells harboring ectopic expression constructs driving *gfp* were grown with inducer as indicated and assessed for GFP fluorescence. (**A**) Cells with a P_{tac}-*gfp* construct were grown with the indicated amount of IPTG. (**B**) Cells with a P_{BAD}-*gfp* construct were grown with the indicated amount of arabinose. (**C**) Cells with a P_{tac}-riboswitch construct were grown with increasing doses (denoted by a triangle below bars) of IPTG (from left to right: 0 μM, 1 μM, 5 μM, 25 μM, 125 μM, 500 μM) or theophylline (from left to right: 0 mM, 0.018 mM, 0.054 mM, 0.16 mM, 0.5 mM, 1.5mM). 'Max' below bars denotes that cells were incubated with the highest concentration of IPTG (500 μM) or theophylline (1.5 mM) as indicated, while 'none' indicates that none of that inducer was added. (**D**) Cells with a P_{BAD}-riboswitch construct were grown with increasing doses (denoted by a triangle below bars) of arabinose (from left to right: 0%, 0.0016%, 0.008%, 0.04%, 0.2%, 1%) or theophylline (from left to right: 0 mM, 0.018 mM, 0.054 mM, 0.16 mM, 0.5 mM, 1.5mM). 'Max' below bars denotes that cells were incubated with the highest concentration of arabinose (1%) or theophylline (1.5 mM) as indicated, while 'none' indicates that none of that inducer was added. All data in **A**-**D** are from at least two independent biological replicates and shown as the mean ± SD. (**E**) Representative phase and epifluorescence images of cells with the indicated *gfp* expression construct grown to mid-log in LB medium without any inducer added. Scale bar, 4 μM.

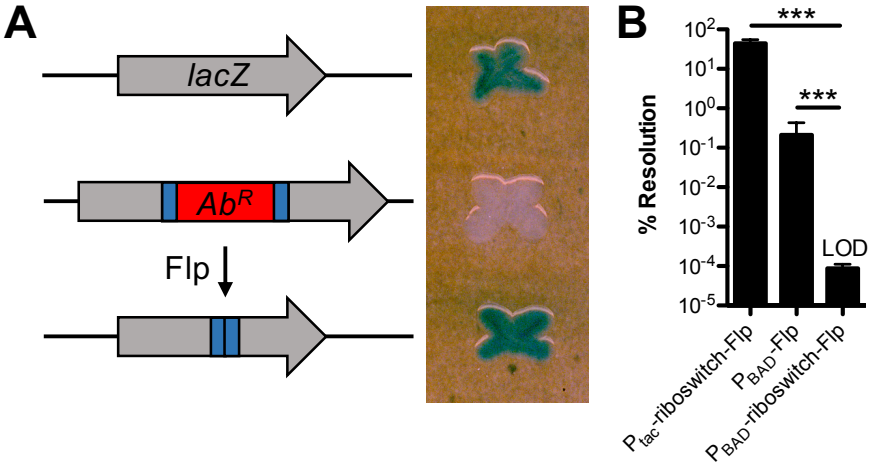

Fig. 3 – *Testing leakiness of ectopic expression constructs with Flp recombinase.* (**A**) Diagram of the approach used to test leakiness in gene expression with Flp recombinase. Wildtype *V. cholerae* cells have intact *lacZ* and form blue colonies on X-gal plates (top). Cells with *lacZ*::FRT-Ab^R-FRT have inactive LacZ and are white on X-gal plates (middle). Flp recombination resolves the FRT-Ab^R-FRT cassette within *lacZ* (making *lacZ*::FRT), which restores LacZ activity (bottom). (**B**) Single colonies of cells harboring the indicated ectopic expression constructs and *lacZ*::FRT-Ab^R-FRT were grown in LB medium without any inducer overnight. Then, % resolution of *lacZ*::FRT-Ab^R-FRT was determined by plating for quantitative culture on X-gal plates. Percent resolution is defined as the number of blue colonies / total CFUs. Data in **B** are from 6 independent biological replicates and shown as the mean ± SD. Statistical comparisons were made by one-way ANOVA with Tukey's post-test. LOD, limit of detection, *** = $P < 0.001$.

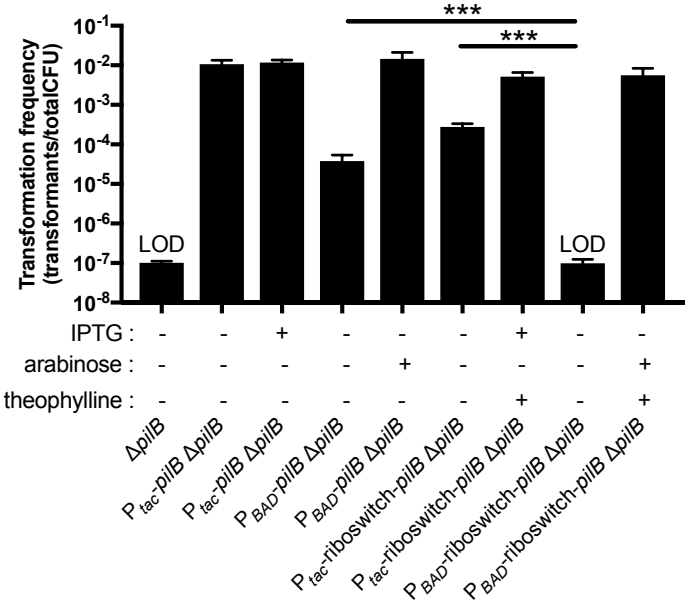

Fig. 4 – *Testing leakiness of ectopic expression constructs with the PilB ATPase.* Natural transformation of the indicated strains was tested. IPTG (100 μM), arabinose (0.2%), and/or theophylline (1.5 mM) were added to reactions as indicated below each bar. Data are from at least 3 independent biological replicates and shown as the mean ± SD. Statistical comparisons were made by one-way ANOVA with Tukey's post-test. LOD, limit of detection, *** = $P < 0.001$.

Supporting Information for

A modular chromosomally integrated toolkit for ectopic gene expression in *Vibrio cholerae*

Triana N. Dalia[1] and Ankur B. Dalia[1,*]

[1]Department of Biology, Indiana University, Bloomington, IN 47405

*Author for correspondence: ankdalia@indiana.edu

This PDF file includes:

Fig.S1
Tables S1-S2

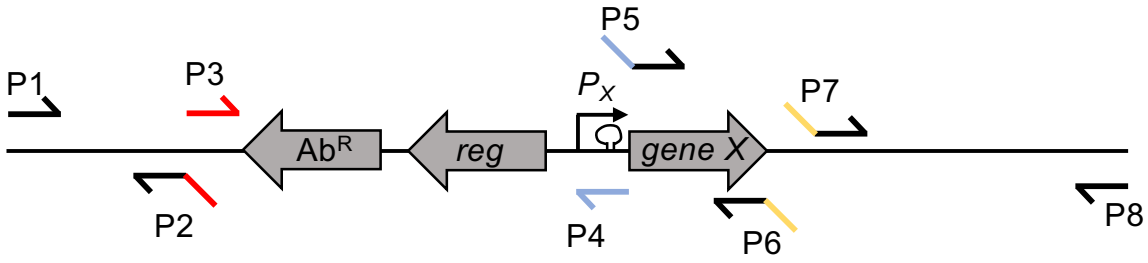

P1: BBC832 - GCTTTTTGCTACAACGACCG
P2: BBC828 - caccatacccacgccgaaacaaCAGTGATGTAGCGAATCGGAC
P3: BBC243 - TTGTTTCGGCGTGGGTATGGTG
P4-1 (P_{tac}-riboswitch or P_{BAD}-riboswitch): BBC2137 - CTTGTTGTTACCTCCTTAGCAGG
P5-1 (P_{tac}-riboswitch or P_{BAD}-riboswitch): cctgctaaggaggtaacaacaagATGXXXXXX
P4-2 (P_{tac} or P_{BAD}): BBC203 - CCCGGGATCCTGTGTGAAATTG
P5-2 (P_{tac} or P_{BAD}): caatttcacacaggatcccggg**AGGAGGT**NNNNNNATGXXXXXX
P6: tgtaggctggagctgcttcTTAYYYYYY
P7: BBC830 - gaagcagctccagcctacaGTTGAGTTGGATGCAGCACC
P8: BBC834 - CACAATTTCTCGCTTAAAATGTCC

Fig. S1 - *Details on how to assemble the ectopic expression constructs and swap out genes of interest.* A generic diagram of the ectopic expression construct is shown with the location of different primers needed to initially construct each expression construct (P1, P2, P3, P6, P7, and P8). As well as the primers to insert novel genes of interest into established expression constructs (P1, P4, P5, P6, P7, and P8). Ab^R = antibiotic resistance cassette, reg = regulatory gene (*lacIq* or *araC*), P_X = the promoter (P_{tac}, P_{BAD}, P_{tac}-riboswitch, or P_{BAD}-riboswitch), and gene X = the gene of interest.

Establishing ectopic expression constructs at new genomic locations: The UP arm of homology is generated with P1 and P2, while the DOWN arm of homology is amplified with P7 and P8. In this example, these primers amplify homology arms to integrate the ectopic expression constructs into *V. cholerae* ChII. P2 and P7 contain tails that overlap any of the 4 ectopic expression constructs. To move intact expression constructs to new locations in the genome, they can be amplified with P3 and P6. This can serve as a MIDDLE arm to stitch to the UP and DOWN arms of homology.

To insert new genes of interest:

Once an ectopic expression construct has been introduced to a genetic locus, the gene of interest can be swapped out.

-To amplify a gene of interest to place within P_{tac}-riboswitch or P_{BAD}-riboswitch the forward P5-1 primer must have a 5' overlap region as indicated. Immediately after this overlap should be the start codon for the gene of interest (highlighted in green) + additional sequence to serve as a primer for the gene of interest (denoted by 'XXXXXX'). P5-1 overlaps with P4-1 (blue highlighted sequence), which sits within the theophylline-dependent riboswitch. Thus, the same overlap can be used to make either P_{tac}-riboswitch or P_{BAD}-riboswitch constructs. The reverse P6 primer for the gene of interest must have the tail indicated, which should be immediately followed by the stop codon of the gene (highlighted in purple – TAA stop codon in this example) + additional sequence to serve as a primer for the gene of interest (denoted by 'YYYYYY').
-To amplify a gene of interest to place within P_{tac} or P_{BAD} the forward P5-2 primer must have the 5' overlap region indicated. Immediately after this overlap should be the desired ribosome binding site (indicated in bold and underline – the 'optimal' RBS AGGAGGT is used in this example), which should be followed by a 6 bp spacer (this spacing between the ribosome binding site and the start codon is essential for optimal translation and can be derived from the native gene) + the start codon (highlighted in green) + additional sequence to serve as a primer for the gene of interest (denoted by 'XXXXXX'). P5-2 overlaps with P4-2 (blue highlighted sequence), which sits downstream of the two promoter elements. Thus, the same overlap can be used to make either P_{tac} or P_{BAD} constructs. The reverse P6 primer for the gene of interest can be made exactly as described above.

All amplified genes of interest serve as MIDDLE arms in SOE reactions with an UP arm amplified with P1 and P4, and a DOWN arm amplified with P7 and P8.

Table S1 – *Strains used in this study*

Name	Relevant figure(s)	Full genotype	Reference / Strain#
parent	Fig. 2E	E7946 *lacZ*::FRT-Spec^R-FRT	This study / SAD035
P_{tac}-*gfp*	Fig. 2A, E	E7946 *lacZ*::FRT-Spec^R-FRT, ΔVCA0692::P_{tac}-*gfp* Carb^R	This study / TND2290 (SAD2780)
P_{BAD}-*gfp*	Fig. 2B, E	E7946 *lacZ*::FRT-Spec^R-FRT, ΔVCA0692::P_{BAD}-*gfp* Carb^R	This study / TND2291 (SAD2781)
P_{tac}-riboswitch-*gfp*	Fig. 2C, E	E7946 *lacZ*::FRT-Spec^R-FRT, ΔVCA0692::P_{tac}-riboswitch-*gfp* Carb^R	This study / TND2293 (SAD2782)
P_{BAD}-riboswitch-*gfp*	Fig. 2D, E	E7946 *lacZ*::FRT-Spec^R-FRT, ΔVCA0692::P_{BAD}-riboswitch-*gfp* Carb^R	This study / TND2292 (SAD2783)
wildtype	Fig. 3A	E7946	(25) / SAD031
P_{BAD}-*Flp*	Fig. 3A-B	E7946 *lacZ*::FRT-Spec^R-FRT, ΔVCA0692::P_{BAD}-*Flp* Carb^R	This study / TND2083 (SAD2784)
P_{tac}-riboswitch-*Flp*	Fig. 3B	E7946 *lacZ*::FRT-Spec^R-FRT, ΔVCA0692::P_{tac}-riboswitch-*Flp* Carb^R	This study / TND2289 (SAD2785)
P_{BAD}-riboswitch-*Flp*	Fig. 3B	E7946 *lacZ*::FRT-Spec^R-FRT, ΔVCA0692::P_{BAD}-riboswitch-*Flp* Carb^R	This study / TND2086 (SAD2786)
Δ*pilB*	Fig. 4	E7946 Sm^R, P_{const}-tfoX, ΔluxO, *pilA* S67C, *lacZ*::FRT-Kan^R-FRT, ΔVC1807::CmR, Δ*pilB*	This study / TND2373 (SAD2787)
P_{tac}-*pilB* Δ*pilB*	Fig. 4	E7946 Sm^R, P_{const}-tfoX, ΔluxO, *pilA* S67C, Δ*lacZ*::P_{tac}-*pilB* Spec^R, ΔVC1807::CmR, Δ*pilB*	This study / JLC769 (SAD2788)
P_{BAD}-*pilB* Δ*pilB*	Fig. 4	E7946 Sm^R, P_{const}-tfoX, ΔluxO, *pilA* S67C, *lacZ*::FRT-Kan^R-FRT, ΔVC1807::CmR, Δ*pilB*, ΔVCA0692::P_{BAD}-*pilB* Carb^R	This study / TND2403 (SAD2789)
P_{tac}-riboswitch-*pilB* Δ*pilB*	Fig. 4	E7946 Sm^R, P_{const}-tfoX, ΔluxO, *pilA* S67C, *lacZ*::FRT-Kan^R-FRT, ΔVC1807::CmR, Δ*pilB*, ΔVCA0692::P_{tac}-riboswitch-*pilB* Carb^R	This study / TND2402 (SAD2790)
P_{BAD}-riboswitch-*pilB* Δ*pilB*	Fig. 4	E7946 Sm^R, P_{const}-tfoX, ΔluxO, *pilA* S67C, *lacZ*::FRT-Kan^R-FRT, ΔVC1807::CmR, Δ*pilB*, ΔVCA0692::P_{BAD}-riboswitch-*pilB* Carb^R	This study / TND2378 (SAD2791)

Table S2 – *Primers used in this study*

Primer Name	Primer Sequence (5'→3')	Description
BBC832	GCTTTTTGCTACAACGACCG	Replace VCA0692 w/ an ectopic expression construct UP ARM F1 (aka P1 in **Fig. S1**)
BBC828	caccatacccacgccgaaacaaCAGTGATGTAGCGAATCGGAC	Replace VCA0692 w/ an ectopic expression construct UP ARM R1 (aka P2 in **Fig. S1**)
BBC830	gaagcagctccagcctacaGTTGAGTTGGATGCAGCACC	Replace VCA0692 w/ an ectopic expression construct DOWN ARM F2 (aka P7 in **Fig. S1**)
BBC834	CACAATTTCTCGCTTAAAATGTCC	Replace VCA0692 w/ an ectopic expression construct DOWN ARM R2 (aka P8 in **Fig. S1**)
BBC243	TTGTTTCGGCGTGGGTATGGTG	Amplify any ectopic expression construct to move to a new genetic locus F (aka P3 in **Fig. S1**)
BBC203	CCCGGGATCCTGTGTGAAATTG	Primer to clone new ectopic genes into P_{tac} or P_{BAD} constructs R1 (aka P4-2 in **Fig. S1**)
BBC2137	CTTGTTGTTACCTCCTTAGCAGG	Primer to clone new ectopic genes into P_{tac}-riboswitch or P_{BAD}-riboswitch constructs R1 (aka P4-1 in **Fig. S1**)
BBC252	caatttcacacaggatcccgggAGGAGGTAACGTAATGCGTAAAGGAGAAGAAC	F Primer to amplify up *gfp* to clone into P_{tac} or P_{BAD} constructs (aka P5-2 in **Fig. S1**)
BBC2182	cctgctaaggaggtaacaacaagATGCGTAAAGGAGAAGAACTTTTCAC	F Primer to amplify up *gfp* to clone into P_{tac}-riboswitch or P_{BAD}-riboswitch (aka P5-1 in **Fig. S1**)
BBC254	tgtaggctggagctgcttcTTAGTTGTATAGTTCATCCATGCC	R Primer to amplify up *gfp* to clone into any ectopic expression construct (aka P6 in **Fig. S1**)
BBC2427	caatttcacacaggatcccgggAGGAGGTTTTTGTATGCCACAATTTGATATATTATG	F Primer to amplify up *Flp* to clone into P_{tac} or P_{BAD} constructs (aka P5-2 in **Fig. S1**)
BBC2455	cctgctaaggaggtaacaacaagATGCCACAATTTGATATATTATGTAAAAC	F Primer to amplify up *Flp* to clone into P_{tac}-riboswitch or P_{BAD}-riboswitch (aka P5-1 in **Fig. S1**)
BBC2428	tgtaggctggagctgcttcTTATATGCGTCTATTTATGTAGGATG	R Primer to amplify up *Flp* to clone into any ectopic expression construct (aka P6 in **Fig. S1**)
BBC1952	caatttcacacaggatcccgggAGGAGGTTAACTAATGCTCACCAACCTTGTTG	F Primer to amplify up *pilB* to clone into P_{tac} or P_{BAD} constructs (aka P5-2 in **Fig. S1**)
BBC2806	cctgctaaggaggtaacaacaagATGCTCACCAACCTTGTTGC	F Primer to amplify up *pilB* to clone into P_{tac}-riboswitch or P_{BAD}-riboswitch (aka P5-1 in **Fig. S1**)

BBC1953	tgtaggctggagctgcttcTTAAAAGTAGAGCACAC GCTG	R Primer to amplify up *pilB* to clone into any ectopic expression construct (aka P6 in **Fig. S1**)
ABD253	GCGACCCCACCGATGGG	*lacZ*::FRT-Ab^R-FRT F1
ABD263	gtcgacggatccccggaatAACTGATCCAATTTTTC AGCGCATATTTTGG	*lacZ*::FRT-Ab^R-FRT R1
ABD262	gaagcagctccagcctacaTGCCGCAGGAAAACC GCCCCCTaATC	*lacZ*::FRT-Ab^R-FRT F2
ABD256	CCCAAATACGGCAACTTGGCG	*lacZ*::FRT-Ab^R-FRT R2
ABD123	ATTCCGGGGATCCGTCGAC	Amplify any Ab^R cassette F
ABD124	TGTAGGCTGGAGCTGCTTC	Amplify any Ab^R cassette R