A modular chromosomally integrated toolkit for ectopic gene expression in *Vibrio cholerae*

Triana N. Dalia[1], Jennifer L. Chlebek[1], and Ankur B. Dalia[1,*]

[1]Department of Biology, Indiana University, Bloomington, IN 47405

*Author for correspondence: ankdalia@indiana.edu

Abstract

The ability to express genes ectopically in bacteria is essential for diverse academic and industrial applications. Two major considerations when utilizing regulated promoter systems for ectopic gene expression are (1) the ability to titrate gene expression by addition of an exogenous inducer and (2) the leakiness of the promoter element in the absence of the inducer. Here, we describe a modular chromosomally integrated platform for ectopic gene expression in *Vibrio cholerae*. We compare the broadly used promoter elements P_{tac} and P_{BAD} to versions that have an additional theophylline-responsive riboswitch (P_{tac}-riboswitch and P_{BAD}-riboswitch). These constructs all exhibited unimodal titratable induction of gene expression, however, max induction varied with P_{tac} > P_{BAD} > P_{BAD}-riboswitch > P_{tac}-riboswitch. We also developed a sensitive reporter system to quantify promoter leakiness and show that leakiness for P_{tac} > P_{tac}-riboswitch > P_{BAD}; while the newly developed P_{BAD}-riboswitch exhibited no detectable leakiness. We demonstrate the utility of the tightly inducible P_{BAD}-riboswitch construct using the dynamic activity of type IV competence pili in *V. cholerae* as a model system. The modular chromosomally integrated toolkit for ectopic gene expression described here should be valuable for the genetic study of *Vibrio cholerae* and could be adapted for use in other species.

Introduction

Regulated promoter systems for ectopic gene expression have been widely used in bacterial systems. Two commonly employed system for ectopic gene expression are the isopropyl β-d-1-thiogalactopyranoside (IPTG)-inducible *tac* promoter (P_{tac}) and the arabinose inducible *araBAD* promoter (P_{BAD}) (1, 2). Both of these systems, however, exhibit some degree of leakiness, which allows for gene expression in the absence of the inducer when cells are grown in rich LB medium. Leakiness of P_{BAD} can be reduced, to some extent, by addition of glucose to the

33 growth medium because this promoter is catabolite repressed (3), however, addition of glucose
34 to the growth medium can change the physiology of cells which may introduce a confounding
35 variable for some experiments.
36
37 Riboswitches are control elements that can regulate gene expression via direct interactions
38 between a small molecule ligand and mRNA. Synthetic riboswitches that are responsive to the
39 small molecule theophylline have recently been developed, which allow for regulated gene
40 expression in diverse biological systems (4, 5). These riboswitch elements likely fold the mRNA
41 to occlude the ribosome binding site in the absence of theophylline. And binding of theophylline
42 to the riboswitch alters the conformation of the mRNA to expose the ribosome binding site and
43 allow for translation of the downstream gene.
44
45 Generally, plasmids are employed for ectopic gene expression. However, many commonly used
46 plasmids are poorly maintained by *Vibrio* species and/or their copy number can vary relative to
47 model systems like *Escherichia coli* (6, 7). Integration of ectopic expression constructs onto the
48 genome can bypass these issues. For many *Vibrio* species (e.g. *Vibrio cholerae*, *Vibrio*
49 *natriegens*, *Vibrio campbellii*, *Vibrio vulnificus*, *Vibrio parahaemolyticus*, and *Vibrio fischeri*), it is
50 remarkably easy to integrate novel sequences into the bacterial genome by exploiting their
51 inherent capacity to undergo horizontal gene transfer by natural transformation (8-13).
52
53 Here, we generate a chromosomally integrated modular platform for ectopic gene expression in
54 *Vibrio* species based on the widely-used P_{tac} and P_{BAD} promoters in conjunction with a
55 previously described theophylline responsive riboswitch (5). We demonstrate that this toolkit
56 allows for differing levels of ectopic gene expression (i.e. max induction), and that one of these
57 promoter constructs (P_{BAD}-riboswitch) allows for a broad-range of titratable gene expression
58 without detectable leakiness. We highlight the utility of this tight expression construct to study
59 the dynamic surface appendages required for natural transformation in *V. cholerae*.
60
61 **Results & Discussion**
62 *Design of modular ectopic expression constructs*
63 All of the ectopic expression constructs are distinct 'cassettes' that can be integrated at any
64 location in the bacterial genome (**Fig. 1**). We accomplish this via simple splicing by overlap
65 extension (SOE) PCR (14) to stitch these expression cassettes to upstream and downstream
66 regions of homology (see **Fig. S1** for details) to generate linear PCR products that can then be

integrated into the *V. cholerae* genome by chitin-induced natural transformation (8). Once an expression construct is integrated at a genomic locus, the gene of interest to be ectopically expressed can be easily exchanged by SOE PCR and natural transformation (see **Fig. S1** for details).

The constructs for ectopic gene expression have a modular design where all have a linked antibiotic resistance marker (Ab^R) (**Fig. 1**). This Ab^R facilitates selection during integration into the genome by natural transformation and can be easily altered depending on the need. Linked to this Ab^R, there are the gene control elements. For P_{tac} and P_{tac}-riboswitch constructs, this includes the LacIq repressor and *tac* promoter. By contrast the P_{BAD} and P_{BAD}-riboswitch constructs contain AraC and the *araBAD* promoter. Both the P_{tac} and P_{BAD} promoter constructs can be engineered to have a user-defined ribosome binding site (**Fig. S1**). By contrast, the two riboswitch constructs (P_{tac}-riboswitch and P_{BAD}-riboswitch) contain a defined ribosome binding site within the theophylline-dependent riboswitch (riboswitch "E" in (5)) that is located immediately upstream of the gene of interest (**Fig. 1** and **Fig. S1**).

Testing inducibility of ectopic expression constructs with GFP

To test whether these different chromosomally integrated constructs allow for inducible gene expression and to compare the maximum level of expression they support, we generated constructs for ectopic expression of *gfp* (15). The maximum level of gene expression varied among constructs with P_{tac} > P_{BAD} > P_{BAD}-riboswitch > P_{tac}-riboswitch (**Fig. 2**). Also, all of these constructs allowed for titratable gene expression (**Fig. 2**). This is particularly notable for P_{BAD}, because this inducible system is known to have an "all-or-none" or autocatalytic gene expression phenotype in wildtype strains of *E. coli* (16). This autocatalytic expression profile is due to high affinity transport of arabinose in *E. coli*, which further stimulates increased expression of arabinose transporters. Uncoupling this autoregulatory loop in *E. coli* can allow for titratable gene expression (17). *V. cholerae* does not catabolize arabinose and lacks high affinity arabinose transporters. Arabinose may be transported into *V. cholerae* nonspecifically through one (or more) of its other carbohydrate transporters. Regardless, this low affinity transport of arabinose in *V. cholerae* allows for titratable gene expression from P_{BAD} (**Fig. 2**), which is consistent with a number of previous studies (18, 19). Also, for constructs that contained the additional riboswitch control element (P_{tac}-riboswitch and P_{BAD}-riboswitch), ectopic gene expression was dependent on addition of theophylline (**Fig. 2**), as expected (5).

101 *Testing ectopic expression constructs for the distribution of GFP fluorescence within single*
102 *cells*.
103 While we observed titratable gene expression above (**Fig. 2**), this was assessed in bulk
104 cultures. Thus, titratable gene expression could be the result of bimodality in gene expression
105 where cells in the population exhibit either a highly fluorescent or poorly fluorescent phenotype
106 (similar to an ON/OFF light switch); and increased inducer simply results in a shift within the
107 population where a higher proportion of cells exhibit the highly fluorescent phenotype. This is in
108 contrast to titratable gene expression where the population responds uniformly to yield a
109 unimodal distribution where increased inducer simply shifts the fluorescence intensity of the
110 entire population (similar to a dimmer switch). Generally, for ectopic expression constructs the
111 latter phenotype is preferred. To distinguish between these possibilities, we assessed the
112 distribution of fluorescence among single cells within induced populations by epifluorescence
113 microscopy. In the absence of inducer, only the P_{tac} construct exhibited detectable GFP
114 fluorescence (**Fig. 2A and E**), which is consistent with this construct being very leaky in *V.*
115 *cholerae*; a phenotype that is already widely appreciated. In the presence of inducer, all four
116 constructs exhibited unimodal distributions, which supports the latter model and suggests that
117 there is a uniform response to inducer among single cells within the population (**Fig. 3**).
118
119 *Testing leakiness of ectopic expression constructs with Flp recombinase*
120 A major consideration for ectopic expression constructs is leakiness, which is defined as the
121 basal expression of regulated genes in the absence of inducer. As mentioned above, only the
122 P_{tac} construct exhibited detectable leakiness when using GFP fluorescence as a readout. This,
123 however, is a poor readout for leaky gene expression because a substantial amount of GFP
124 protein is required to generate an observable fluorescent readout. We sought to develop a
125 sensitive and easily measured phenotype for leakiness from our ectopic expression constructs.
126 To that end, we employed flippase (Flp), a highly-efficient recombinase that can mediate site-
127 specific recombination between two Flp recombinase target (FRT) sequences (20, 21). Flanking
128 FRT sequences can be engineered to leave behind an in-frame scar following Flp excision (22).
129 To generate a simple readout for Flp-mediated activity, we introduced a FRT-flanked Ab^R into
130 the *lacZ* gene in *V. cholerae* (**Fig. 4A**). Strains with *lacZ*::FRT-Ab^R-FRT yielded a white colony
131 phenotype on X-gal plates. Following Flp-mediated excision, however, the resulting *lacZ* gene
132 (containing an in-frame 81 bp insertion) is active, and strains harboring *lacZ*::FRT exhibit a blue
133 colony phenotype on X-gal plates (**Fig. 4A**). Thus, following Flp-mediated resolution, cells are
134 irreversibly converted from LacZ- (white colonies) to LacZ+ (blue colonies). To determine

135 whether our expression constructs exhibited leaky expression, we generated ectopic expression
136 constructs to drive Flp expression in strains that harbored the *lacZ*::FRT-Ab^R-FRT construct.
137 P_{tac}-*Flp* was so leaky that all cells where we introduced this construct resolved *lacZ*::FRT-Ab^R-
138 FRT to yield only blue colonies even in the absence of inducer. All of the other constructs (P_{tac}-
139 riboswitch-*Flp*, P_{BAD}-*Flp*, and P_{BAD}-riboswitch-*Flp*) yielded only resolved blue colonies when
140 grown in the presence of inducer. In the absence of inducer, both P_{tac}-riboswitch-*Flp* and P_{BAD}-
141 *Flp* exhibited some degree of leakiness, while P_{BAD}-riboswitch-*Flp* did not exhibit any detectable
142 leakiness in this assay (**Fig. 4B**). It is notable that the limit of detection of this assay is ~3 logs
143 below the leakiness observed from the P_{BAD} promoter, a construct that is traditionally considered
144 tightly repressed in the absence of inducer (2, 3). This further validates our Flp-based assay as
145 a highly sensitive approach to assess promoter leakiness.
146
147 *Employing ectopic expression constructs to study the dynamic activity of type IV competence*
148 *pili in V. cholerae*
149 Horizontal gene transfer by natural transformation in *V. cholerae* is dependent on type IV
150 competence pili (23, 24). These pili extend from the bacterial surface, bind to DNA in the
151 environment, and then retract to pull DNA across the outer membrane (23). This ingested DNA
152 can then be translocated into the cytoplasm and integrated into the bacterial genome by
153 homologous recombination. PilB is the motor ATPase that is required for extension of type IV
154 competence pili (25). To study the role of PilB in dynamic pilus activity, we sought to establish a
155 strain that allowed for titratable and tightly regulated control of pilus extension. To that end, we
156 generated strains where the native copy of *pilB* was deleted, and *pilB* expression was
157 ectopically driven by our expression constructs. We then tested whether these strains were
158 naturally transformable when grown without any inducer added. Only leaky expression of *pilB*
159 would allow for natural transformation in this assay because Δ*pilB* mutants are not
160 transformable (**Fig. 5A**). As observed using our Flp reporter readout, in the absence of inducer,
161 P_{tac}, P_{tac}-riboswitch, and P_{BAD} all exhibited leaky expression of *pilB* as evidenced by detectable
162 natural transformation, while there was no detectable leakiness observed for P_{BAD}-riboswitch
163 because no transformants were obtained in this background without inducer added (**Fig. 5A**).
164 Importantly, this experiment was performed in plain LB medium, thus, induction of catabolite
165 repression (by the addition of glucose to the medium) was not necessary to prevent leaky gene
166 expression. As expected, all strains transformed at high rates in the presence of inducer (**Fig.**
167 **5A**). These results suggest that leaky expression of *pilB* from P_{tac}, P_{BAD}, and P_{tac}-riboswitch
168 allow for some degree of pilus assembly even without inducer added, while pilus assembly is

169 completely inhibited in the P_{BAD}-riboswitch construct when no inducer is present. To test this
170 idea further, we deleted the retraction ATPase *pilT* in these strains. This prevents extended pili
171 from being easily retracted and sensitizes the direct observation of pilus assembly via a recently
172 developed pilus labeling approach (26). To determine whether leaky *pilB* expression allowed for
173 pilus assembly, we assessed piliation in strains that were grown in the absence of inducer.
174 Indeed, for P_{tac}, P_{BAD}, and P_{tac}-riboswitch, we observed cells that contained extended pilus fibers
175 (**Fig. 5B**), which is consistent with the leaky expression detected using our Flp recombinase
176 reporter (**Fig. 4B**). We did not, however, observe extended pili in strains with P_{BAD}-riboswitch
177 when grown without inducer (**Fig. 4B**), which is consistent with a lack of leaky expression for
178 this construct (**Fig. 4B**). As expected, all strains generated extended pili when grown with the
179 appropriate inducer (**Fig. 5B**).
180
181 Together, these data indicate that only our newly generated P_{BAD}-riboswitch-*pilB* construct
182 allows for tightly regulated and titratable control of pilus biogenesis / extension in *V. cholerae*.
183 This provides a valuable resource that will be critical for addressing diverse questions related to
184 type IV pilus biology, which will be the focus of future work.
185
186 **Methods**
187 *Bacterial strains and growth conditions*
188 All strains used in this study are derivates of E7946, an El Tor isolate of *V. cholerae* (27). See
189 **Table S1** for a complete list of strains used in this study. Strains were routinely grown at 30°C or
190 37°C in LB Miller broth and agar (BD Difco). When appropriate, media was supplemented with
191 carbenicillin (20 µg/mL), spectinomycin (200 µg/mL), kanamycin (50 µg/mL), trimethoprim (10
192 µg/mL), chloramphenicol (1 µg/mL), or erythromycin (10 µg/mL).
193
194 *Construction of mutant strains*
195 All strains were generated by SOE PCR and chitin-induced natural transformation exactly as
196 previously described (8, 28). See **Fig. S1** for details on how the ectopic expression constructs
197 were assembled and **Table S2** for a detailed list of all primers used to generate all of the mutant
198 constructs in this study. The *araC* – P_{BAD} region for our P_{BAD} and P_{BAD}-riboswitch constructs was
199 amplified from pBAD18-Kan (3). The P_{tac}-riboswitch construct was amplified from DNA
200 generously provided by Kim Seed (29).
201
202 *GFP fluorescence assays*

203 Cells harboring ectopic expression constructs driving *gfp* were grown rolling at 30°C to mid-log
204 in LB medium. Then, inducer was added as indicated in each experiment and cells were grown
205 for two additional hours rolling at 30°C. Next, cells were washed and resuspended to the same
206 optical density in instant ocean medium (7 g/L; Aquarium Systems) and fluorescence was
207 measured on a Biotek H1M plate reader: excitation 500 nm / emission 540 nm exactly as
208 previously described (30). The parent strain lacking any ectopic expression construct was
209 assayed alongside and used to subtract the background fluorescence of cells.
210
211 To image cells for GFP fluorescence, cultures were grown rolling at 30°C in LB medium in the
212 presence of the indicated inducers for 5 hours to late-log. Then, cells were washed in instant
213 ocean medium and mounted on 0.2% gelzan pads made with instant ocean medium exactly as
214 previously described (31).
215
216 *Flp recombinase assays*
217 Cells harboring ectopic expression constructs driving *Flp* and *lacZ*::FRT-Spec^{R}-FRT were struck
218 out onto LB + X-gal (40 µg/mL) + spectinomycin (200 µg/mL) plates. Single white colonies were
219 picked, inoculated into plain LB medium, and grown overnight rolling at 30°C. Then, each
220 culture was plated quantitatively on LB+Xgal plates to determine the frequency of blue colonies
221 within the population. Empirically, we determined that we could only reliably detect blue colonies
222 at a rate of ~1 in 1,000,000 cells or 0.0001%. This equated to scoring for blue colonies on 100
223 µL spread plates of a dilution of 10^{-3} or greater. If no blue colonies were observed at 10^{-3}, we
224 assumed a single blue colony was present to define the limit of detection for that sample. Data
225 are reported as the % Resolution = (CFU/mL blue colonies / CFU/mL total colonies) x 100.
226
227 *Natural transformation assays*
228 Cells harboring ectopic expression constructs driving *pilB* and the native *pilB* gene deleted were
229 tested for rates of natural transformation. All of these strains also harbored $P_{constitutive}$-*tfoX* and
230 Δ*luxO* mutations, which rendered these strains constitutively competent. Strains were tested for
231 natural transformation using chitin-independent transformation assays exactly as previously
232 described (32). The transforming DNA using in these experiments was 100 ng of a 6 kb
233 ΔVC1807::Erm^{R} PCR product.
234
235 *Pilus labeling*

236 All strains harbored the indicated ectopic expression construct, a cysteine amino acid
237 substitution in the major pilin subunit PilA ($PilA^{S56C}$), a deletion of the native copy of *pilB* (Δ*pilB*),
238 $P_{constitutive}$-*tfoX*, a Δ*luxO* mutation, and a deletion of the retraction ATPase *pilT* (Δ*pilT*). Strains
239 were grown and labeled with Alexa fluor 488-maleimide exactly as previously described (32).
240 And mounted on 0.2% gelzan pads made with instant ocean medium.
241
242 *Microscopy*
243 Phase contrast and fluorescence images were collected on a Nikon Ti-2 microscope using a
244 Plan Apo ×60 objective, a GFP filter cube, a Hamamatsu ORCAFlash 4.0 camera and Nikon
245 NIS Elements imaging software. For **Fig. 2E**, the lookup tables for each phase and fluorescent
246 image were adjusted to the same range so that they can be compared between samples.
247 Fluorescence intensity of cells was determined using the MicrobeJ plugin (33) in Fiji (34).
248
249 **Acknowledgements**
250 We gratefully acknowledge Eric Bruger, Christopher Marx, Julia van Kessel, and Johann Strnat
251 for helpful discussions; and Kim Seed for generously providing DNA with the P_{tac}-riboswitch
252 construct. This work was supported by funds from the National Science Foundation (1714949),
253 Department of Energy (DE-SC0019436), and the National Institutes of Health (R35GM128674)
254 to ABD.
255
256 **References**
257 1. de Boer HA, Comstock LJ, Vasser M. 1983. The tac promoter: a functional hybrid derived
258 from the trp and lac promoters. Proc Natl Acad Sci U S A 80:21-5.
259 2. Lee N, Francklyn C, Hamilton EP. 1987. Arabinose-induced binding of AraC protein to
260 araI2 activates the araBAD operon promoter. Proc Natl Acad Sci U S A 84:8814-8.
261 3. Guzman LM, Belin D, Carson MJ, Beckwith J. 1995. Tight regulation, modulation, and
262 high-level expression by vectors containing the arabinose PBAD promoter. J Bacteriol
263 177:4121-30.
264 4. Lynch SA, Gallivan JP. 2009. A flow cytometry-based screen for synthetic riboswitches.
265 Nucleic Acids Res 37:184-92.
266 5. Topp S, Reynoso CM, Seeliger JC, Goldlust IS, Desai SK, Murat D, Shen A, Puri AW,
267 Komeili A, Bertozzi CR, Scott JR, Gallivan JP. 2010. Synthetic riboswitches that induce
268 gene expression in diverse bacterial species. Appl Environ Microbiol 76:7881-4.
269 6. Tschirhart T, Shukla V, Kelly EE, Schultzhaus Z, NewRingeisen E, Erickson JS, Wang Z,
270 Garcia W, Curl E, Egbert RG, Yeung E, Vora GJ. 2019. Synthetic Biology Tools for the Fast-
271 Growing Marine Bacterium Vibrio natriegens. ACS Synth Biol 8:2069-2079.

272 7. Delavat F, Bidault A, Pichereau V, Paillard C. 2018. Rapid and efficient protocol to
273 introduce exogenous DNA in Vibrio harveyi and Pseudoalteromonas sp. J Microbiol
274 Methods 154:1-5.
275 8. Dalia AB. 2018. Natural Cotransformation and Multiplex Genome Editing by Natural
276 Transformation (MuGENT) of Vibrio cholerae. Methods Mol Biol 1839:53-64.
277 9. Simpson CA, Podicheti R, Rusch DB, Dalia AB, van Kessel JC. 2019. Diversity in Natural
278 Transformation Frequencies and Regulation across Vibrio Species. mBio 10.
279 10. Dalia TN, Hayes CA, Stolyar S, Marx CJ, McKinlay JB, Dalia AB. 2017. Multiplex Genome
280 Editing by Natural Transformation (MuGENT) for Synthetic Biology in Vibrio natriegens.
281 ACS Synth Biol 6:1650-1655.
282 11. Chimalapati S, de Souza Santos M, Servage K, De Nisco NJ, Dalia AB, Orth K. 2018.
283 Natural Transformation in Vibrio parahaemolyticus: a Rapid Method To Create Genetic
284 Deletions. J Bacteriol 200.
285 12. Brooks JF, 2nd, Gyllborg MC, Kocher AA, Markey LE, Mandel MJ. 2015. TfoX-based
286 genetic mapping identifies Vibrio fischeri strain-level differences and reveals a common
287 lineage of laboratory strains. J Bacteriol 197:1065-74.
288 13. Visick KL, Hodge-Hanson KM, Tischler AH, Bennett AK, Mastrodomenico V. 2018. Tools
289 for Rapid Genetic Engineering of Vibrio fischeri. Appl Environ Microbiol 84.
290 14. Horton RM, Hunt HD, Ho SN, Pullen JK, Pease LR. 1989. Engineering hybrid genes
291 without the use of restriction enzymes: gene splicing by overlap extension. Gene 77:61-
292 8.
293 15. Cormack BP, Valdivia RH, Falkow S. 1996. FACS-optimized mutants of the green
294 fluorescent protein (GFP). Gene 173:33-8.
295 16. Siegele DA, Hu JC. 1997. Gene expression from plasmids containing the araBAD
296 promoter at subsaturating inducer concentrations represents mixed populations. Proc
297 Natl Acad Sci U S A 94:8168-72.
298 17. Khlebnikov A, Risa O, Skaug T, Carrier TA, Keasling JD. 2000. Regulatable arabinose-
299 inducible gene expression system with consistent control in all cells of a culture. J
300 Bacteriol 182:7029-34.
301 18. Judson N, Mekalanos JJ. 2000. TnAraOut, a transposon-based approach to identify and
302 characterize essential bacterial genes. Nat Biotechnol 18:740-5.
303 19. Lo Scrudato M, Blokesch M. 2012. The regulatory network of natural competence and
304 transformation of Vibrio cholerae. PLoS Genet 8:e1002778.
305 20. Broach JR, Guarascio VR, Jayaram M. 1982. Recombination within the yeast plasmid
306 2mu circle is site-specific. Cell 29:227-34.
307 21. Cox MM. 1983. The FLP protein of the yeast 2-microns plasmid: expression of a
308 eukaryotic genetic recombination system in Escherichia coli. Proc Natl Acad Sci U S A
309 80:4223-7.
310 22. Baba T, Ara T, Hasegawa M, Takai Y, Okumura Y, Baba M, Datsenko KA, Tomita M,
311 Wanner BL, Mori H. 2006. Construction of *Escherichia coli* K-12 in-frame, single-gene
312 knockout mutants: the Keio collection. Mol Syst Biol 2:2006 0008.
313 23. Ellison CK, Dalia TN, Vidal Ceballos A, Wang JC, Biais N, Brun YV, Dalia AB. 2018.
314 Retraction of DNA-bound type IV competence pili initiates DNA uptake during natural
315 transformation in Vibrio cholerae. Nat Microbiol 3:773-780.

316 24. Seitz P, Blokesch M. 2013. DNA-uptake machinery of naturally competent Vibrio
317 cholerae. Proc Natl Acad Sci U S A 110:17987-92.
318 25. Ellison CK, Kan J, Chlebek JL, Hummels KR, Panis G, Viollier PH, Biais N, Dalia AB, Brun YV.
319 2019. A bifunctional ATPase drives tad pilus extension and retraction. Sci Adv
320 5:eaay2591.
321 26. Ellison CK, Dalia TN, Dalia AB, Brun YV. 2019. Real-time microscopy and physical
322 perturbation of bacterial pili using maleimide-conjugated molecules. Nat Protoc
323 doi:10.1038/s41596-019-0162-6:In Press. .
324 27. Miller VL, DiRita VJ, Mekalanos JJ. 1989. Identification of toxS, a regulatory gene whose
325 product enhances toxR-mediated activation of the cholera toxin promoter. J Bacteriol
326 171:1288-93.
327 28. Dalia AB, McDonough E, Camilli A. 2014. Multiplex genome editing by natural
328 transformation. Proc Natl Acad Sci U S A 111:8937-42.
329 29. McKitterick AC, Seed KD. 2018. Anti-phage islands force their target phage to directly
330 mediate island excision and spread. Nat Commun 9:2348.
331 30. Dalia AB. 2016. RpoS is required for natural transformation of Vibrio cholerae through
332 regulation of chitinases. Environ Microbiol 18:3758-3767.
333 31. Dalia AB, Dalia TN. 2019. Spatiotemporal Analysis of DNA Integration during Natural
334 Transformation Reveals a Mode of Nongenetic Inheritance in Bacteria. Cell 179:1499-
335 1511 e10.
336 32. Chlebek JL, Hughes HQ, Ratkiewicz AS, Rayyan R, Wang JC, Herrin BE, Dalia TN, Biais N,
337 Dalia AB. 2019. PilT and PilU are homohexameric ATPases that coordinate to retract
338 type IVa pili. PLoS Genet 15:e1008448.
339 33. Ducret A, Quardokus EM, Brun YV. 2016. MicrobeJ, a tool for high throughput bacterial
340 cell detection and quantitative analysis. Nat Microbiol 1:16077.
341 34. Schindelin J, Arganda-Carreras I, Frise E, Kaynig V, Longair M, Pietzsch T, Preibisch S,
342 Rueden C, Saalfeld S, Schmid B, Tinevez JY, White DJ, Hartenstein V, Eliceiri K, Tomancak
343 P, Cardona A. 2012. Fiji: an open-source platform for biological-image analysis. Nat
344 Methods 9:676-82.
345

346

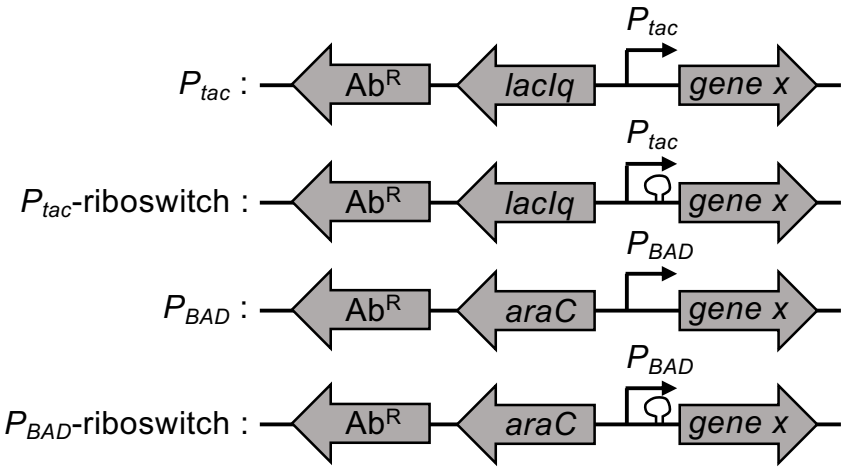

347

348

349 **Fig. 1 – *Diagram of ectopic expression constructs*.** The four ectopic expression constructs
350 characterized in this study are indicated. All have a linked antibiotic resistance cassette (Ab^R) to facilitate
351 selection during integration into the genome by natural transformation. The gene encoding a transcription
352 factor (*lacIq* or *araC*) and the promoter (P_{tac} or P_{BAD}) required for inducible gene regulation are indicated.
353 The presence of a theophylline-dependent riboswitch is demarcated by a loop before the gene of interest
354 (*gene x*). For details on how these constructs were assembled, see **Fig. S1**.

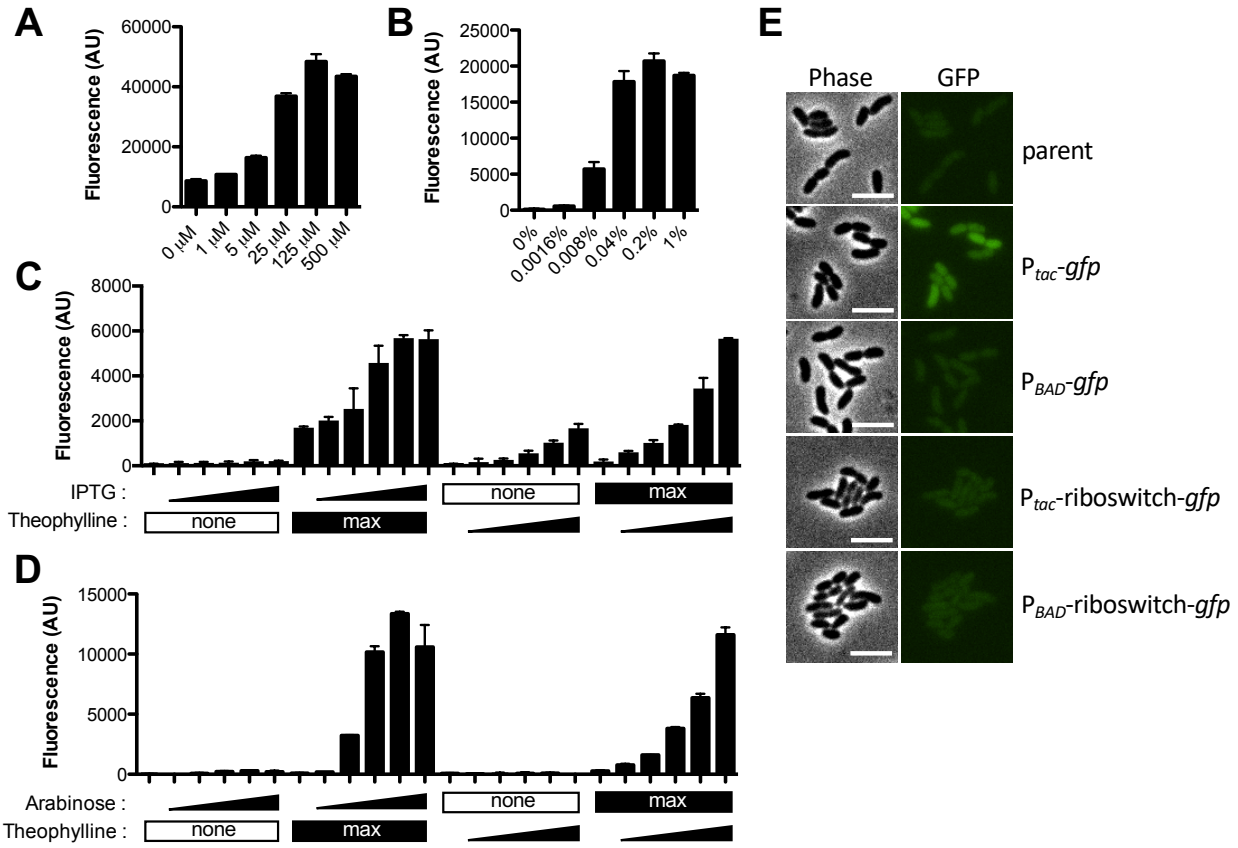

Fig. 2 – *Testing inducibility of ectopic expression constructs with GFP*. (**A**-**D**) Cells harboring ectopic expression constructs driving *gfp* were grown with inducer as indicated and assessed for GFP fluorescence in bulk cultures on a plate reader. (**A**) Cells with a P_{tac}-*gfp* construct were grown with the indicated amount of IPTG. (**B**) Cells with a P_{BAD}-*gfp* construct were grown with the indicated amount of arabinose. (**C**) Cells with a P_{tac}-riboswitch construct were grown with increasing doses (denoted by a triangle below bars) of IPTG (from left to right: 0 μM, 1 μM, 5 μM, 25 μM, 125 μM, 500 μM) or theophylline (from left to right: 0 mM, 0.018 mM, 0.054 mM, 0.16 mM, 0.5 mM, 1.5mM). 'Max' below bars denotes that cells were incubated with the highest concentration of IPTG (500 μM) or theophylline (1.5 mM) as indicated, while 'none' indicates that none of that inducer was added. (**D**) Cells with a P_{BAD}-riboswitch construct were grown with increasing doses (denoted by a triangle below bars) of arabinose (from left to right: 0%, 0.0016%, 0.008%, 0.04%, 0.2%, 1%) or theophylline (from left to right: 0 mM, 0.018 mM, 0.054 mM, 0.16 mM, 0.5 mM, 1.5mM). 'Max' below bars denotes that cells were incubated with the highest concentration of arabinose (1%) or theophylline (1.5 mM) as indicated, while 'none' indicates that none of that inducer was added. All data in **A**-**D** are from at least two independent biological replicates and shown as the mean ± SD. (**E**) Representative phase and epifluorescence images of cells with the indicated ectopic expression construct grown without any inducer added. Scale bar, 4 μM.

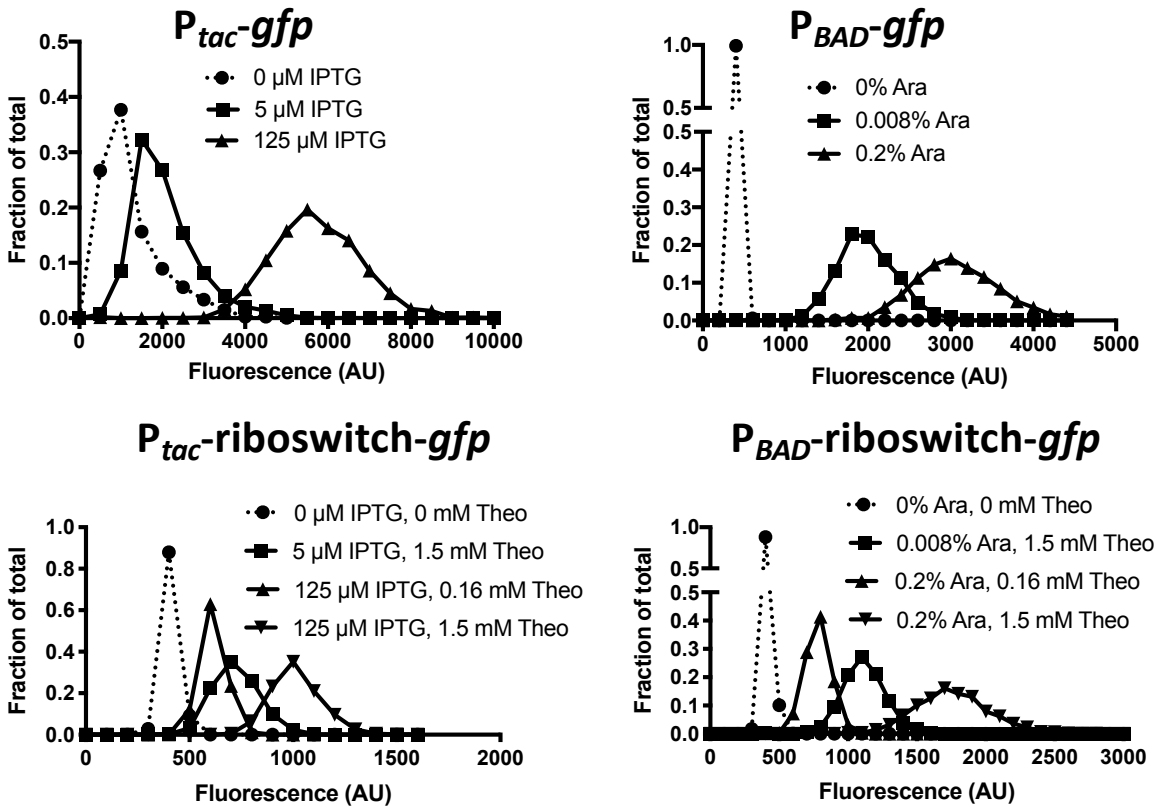

Fig. 3 – ***Testing ectopic expression constructs for the distribution of GFP fluorescence within single cells.*** Cells harboring the indicated ectopic expression constructs were grown with inducer as indicated and assessed for GFP fluorescence in single cells via epifluorescence microscopy (Theo = theophylline; Ara = arabinose). The distribution of fluorescence among cells in the population is indicated on the plotted histograms. Data are from >1000 cells per condition tested and representative of two independent experiments.

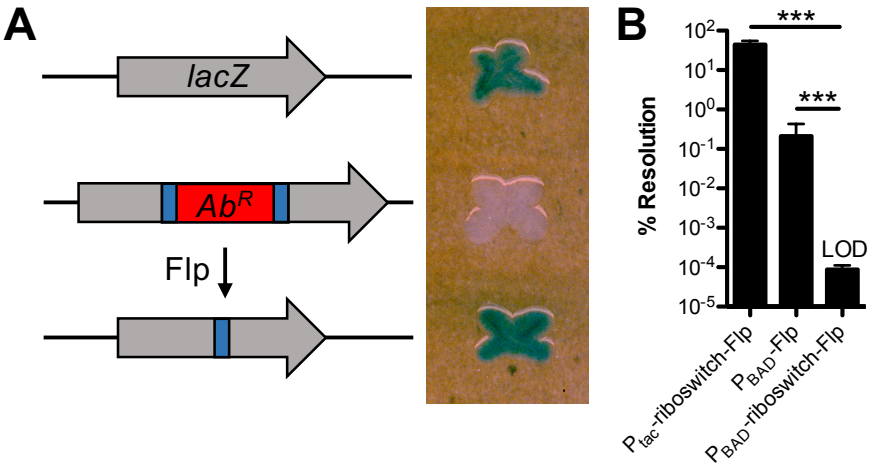

382

383 **Fig. 4 – *Testing leakiness of ectopic expression constructs with Flp recombinase.*** (**A**) Diagram of
384 the approach used to test leakiness in gene expression with Flp recombinase. Wildtype *V. cholerae* cells
385 have intact *lacZ* and form blue colonies on X-gal plates (top). Cells with *lacZ*::FRT-Ab^R-FRT have inactive
386 LacZ and are white on X-gal plates (middle). Flp recombination resolves the FRT-Ab^R-FRT cassette
387 within *lacZ* (making *lacZ*::FRT), which restores LacZ activity (bottom). (**B**) Single colonies of cells
388 harboring the indicated ectopic expression constructs and *lacZ*::FRT-Ab^R-FRT were grown in LB medium
389 without any inducer overnight. Then, % resolution of *lacZ*::FRT-Ab^R-FRT was determined by plating for
390 quantitative culture on X-gal plates. Percent resolution is defined as the number of blue colonies / total
391 CFUs. Data in **B** are from 6 independent biological replicates and shown as the mean ± SD. Statistical
392 comparisons were made by one-way ANOVA with Tukey's post-test. LOD, limit of detection, *** = $P <$
393 0.001.

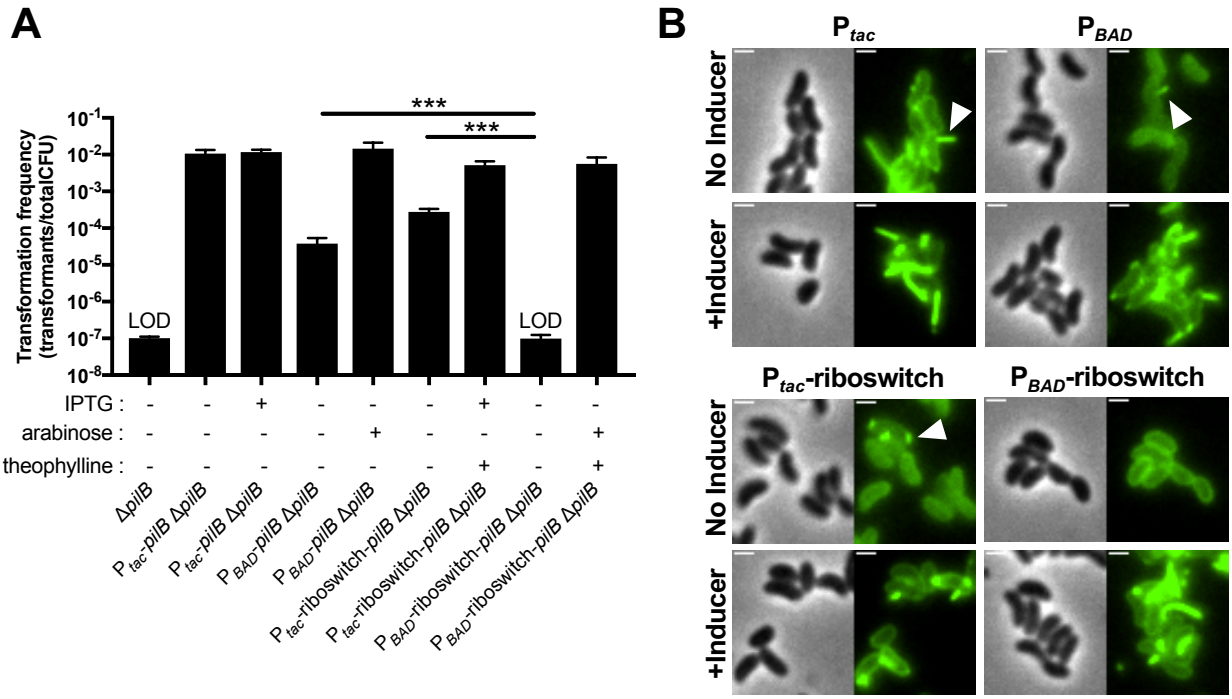

Fig. 5 – *Employing ectopic expression constructs to study the type IV competence pilus extension ATPase PilB.* (**A**) Natural transformation of the indicated strains was tested. IPTG (100 μM), arabinose (0.2%), and/or theophylline (1.5 mM) were added to reactions as indicated below each bar. Data are from at least 3 independent biological replicates and shown as the mean ± SD. Statistical comparisons were made by one-way ANOVA with Tukey's post-test. LOD, limit of detection, *** = $P < 0.001$. (**B**) Representative images of surface piliation. All strains harbor Δ*pilB* and Δ*pilT* mutations at the native locus and the indicated ectopic *pilB* expression construct. Where indicated, cells were grown with inducer as follows: 100 μM IPTG for P_{tac}, 0.2% arabinose for P_{BAD}, 100 μM IPTG + 1.5 mM theophylline for P_{tac}-riboswitch, and 0.2% arabinose + 1.5 mM theophylline for P_{BAD}-riboswitch. Examples of extended pili in no inducer samples are indicated by white arrows. Scale bars, 1 μm.

Supporting Information for

A modular chromosomally integrated toolkit for ectopic gene expression in *Vibrio cholerae*

Triana N. Dalia[1], Jennifer L. Chlebek[1], and Ankur B. Dalia[1,*]

[1]Department of Biology, Indiana University, Bloomington, IN 47405

*Author for correspondence: ankdalia@indiana.edu

This PDF file includes:

Fig. S1
Tables S1-S2

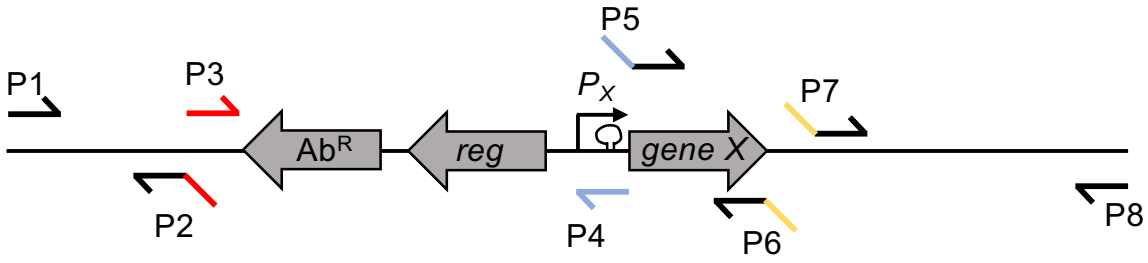

P1: BBC832 - GCTTTTTGCTACAACGACCG
P2: BBC828 - caccatacccacgccgaaacaaCAGTGATGTAGCGAATCGGAC
P3: BBC243 - TTGTTTCGGCGTGGGTATGGTG
P4-1 (P_{tac}-riboswitch or P_{BAD}-riboswitch): BBC2137 - CTTGTTGTTACCTCCTTAGCAGG
P5-1 (P_{tac}-riboswitch or P_{BAD}-riboswitch): cctgctaaggaggtaacaacaagATGXXXXXX
P4-2 (P_{tac} or P_{BAD}): BBC203 - CCCGGGATCCTGTGTGAAATTG
P5-2 (P_{tac} or P_{BAD}): caatttcacacaggatcccgggAGGAGGTNNNNNNATGXXXXXX
P6: tgtaggctggagctgcttcTTAYYYYYY
P7: BBC830 - gaagcagctccagcctacaGTTGAGTTGGATGCAGCACC
P8: BBC834 - CACAATTTCTCGCTTAAAATGTCC

Fig. S1 - *Details on how to assemble the ectopic expression constructs and swap out genes of interest.* A generic diagram of the ectopic expression construct is shown with the location of different primers needed to initially construct each expression construct (P1, P2, P3, P6, P7, and P8). As well as the primers to insert novel genes of interest into established expression constructs (P1, P4, P5, P6, P7, and P8). Ab^R = antibiotic resistance cassette, reg = regulatory gene (*lacIq* or *araC*), P_X = the promoter (P_{tac}, P_{BAD}, P_{tac}-riboswitch, or P_{BAD}-riboswitch), and gene X = the gene of interest.

Establishing ectopic expression constructs at new genomic locations: The UP arm of homology is generated with P1 and P2, while the DOWN arm of homology is amplified with P7 and P8. In this example, these primers amplify homology arms to integrate the ectopic expression constructs into *V. cholerae* ChII. P2 and P7 contain tails that overlap any of the 4 ectopic expression constructs. To move intact expression constructs to new locations in the genome, they can be amplified with P3 and P6. This can serve as a MIDDLE arm to stitch to the UP and DOWN arms of homology.

To insert new genes of interest:

Once an ectopic expression construct has been introduced to a genetic locus, the gene of interest can be swapped out.

-To amplify a gene of interest to place within P_{tac}-riboswitch or P_{BAD}-riboswitch the forward P5-1 primer must have a 5' overlap region as indicated. Immediately after this overlap should be the start codon for the gene of interest (highlighted in green) + additional sequence to serve as a primer for the gene of interest (denoted by 'XXXXXX'). P5-1 overlaps with P4-1 (blue highlighted sequence), which sits within the theophylline-dependent riboswitch. Thus, the same overlap can be used to make either P_{tac}-riboswitch or P_{BAD}-riboswitch constructs. The reverse P6 primer for the gene of interest must have the tail indicated, which should be immediately followed by the stop codon of the gene (highlighted in purple – TAA stop codon in this example) + additional sequence to serve as a primer for the gene of interest (denoted by 'YYYYYY').
-To amplify a gene of interest to place within P_{tac} or P_{BAD} the forward P5-2 primer must have the 5' overlap region indicated. Immediately after this overlap should be the desired ribosome binding site (indicated in bold and underline – the 'optimal' RBS AGGAGGT is used in this example), which should be followed by a 6 bp spacer (this spacing between the ribosome binding site and the start codon is essential for optimal translation and can be derived from the native gene) + the start codon (highlighted in green) + additional sequence to serve as a primer for the gene of interest (denoted by 'XXXXXX'). P5-2 overlaps with P4-2 (blue highlighted sequence), which sits downstream of the two promoter elements. Thus, the same overlap can be used to make either P_{tac} or P_{BAD} constructs. The reverse P6 primer for the gene of interest can be made exactly as described above.

All amplified genes of interest serve as MIDDLE arms in SOE reactions with an UP arm amplified with P1 and P4, and a DOWN arm amplified with P7 and P8.

Table S1 – *Strains used in this study*

Name	Relevant figure(s)	Full genotype	Reference / Strain#
parent	Fig. 2E	E7946 *lacZ*::FRT-Spec^R-FRT	This study / SAD035
P_{tac}-*gfp*	Fig. 2A, E; Fig. 3	E7946 *lacZ*::FRT-Spec^R-FRT, ΔVCA0692::P_{tac}-*gfp* Carb^R	This study / TND2290 (SAD2780)
P_{BAD}-*gfp*	Fig. 2B, E; Fig. 3	E7946 *lacZ*::FRT-Spec^R-FRT, ΔVCA0692::P_{BAD}-*gfp* Carb^R	This study / TND2291 (SAD2781)
P_{tac}-riboswitch-*gfp*	Fig. 2C, E; Fig. 3	E7946 *lacZ*::FRT-Spec^R-FRT, ΔVCA0692::P_{tac}-riboswitch-*gfp* Carb^R	This study / TND2293 (SAD2782)
P_{BAD}-riboswitch-*gfp*	Fig. 2D, E; Fig. 3	E7946 *lacZ*::FRT-Spec^R-FRT, ΔVCA0692::P_{BAD}-riboswitch-*gfp* Carb^R	This study / TND2292 (SAD2783)
wildtype	Fig. 4A	E7946	(25) / SAD031
P_{BAD}-*Flp*	Fig. 4A-B	E7946 *lacZ*::FRT-Spec^R-FRT, ΔVCA0692::P_{BAD}-*Flp* Carb^R	This study / TND2083 (SAD2784)
P_{tac}-riboswitch-*Flp*	Fig. 4B	E7946 *lacZ*::FRT-Spec^R-FRT, ΔVCA0692::P_{tac}-riboswitch-*Flp* Carb^R	This study / TND2289 (SAD2785)
P_{BAD}-riboswitch-*Flp*	Fig. 4B	E7946 *lacZ*::FRT-Spec^R-FRT, ΔVCA0692::P_{BAD}-riboswitch-*Flp* Carb^R	This study / TND2086 (SAD2786)
Δ*pilB*	Fig. 5A	E7946 Sm^R, P_{const}-tfoX, ΔluxO, *pilA* S67C, *lacZ*::FRT-Kan^R-FRT, ΔVC1807::CmR, Δ*pilB*	This study / TND2373 (SAD2787)
P_{tac}-*pilB* Δ*pilB*	Fig. 5A	E7946 Sm^R, P_{const}-tfoX, ΔluxO, *pilA* S67C, Δ*lacZ*::P_{tac}-*pilB* Spec^R, ΔVC1807::CmR, Δ*pilB*	This study / JLC769 (SAD2788)
P_{BAD}-*pilB* Δ*pilB*	Fig. 5A	E7946 Sm^R, P_{const}-tfoX, ΔluxO, *pilA* S67C, *lacZ*::FRT-Kan^R-FRT, ΔVC1807::CmR, Δ*pilB*, ΔVCA0692::P_{BAD}-*pilB* Carb^R	This study / TND2403 (SAD2789)
P_{tac}-riboswitch-*pilB* Δ*pilB*	Fig. 5A	E7946 Sm^R, P_{const}-tfoX, ΔluxO, *pilA* S67C, *lacZ*::FRT-Kan^R-FRT, ΔVC1807::CmR, Δ*pilB*, ΔVCA0692::P_{tac}-riboswitch-*pilB* Carb^R	This study / TND2402 (SAD2790)
P_{BAD}-riboswitch-*pilB* Δ*pilB*	Fig. 5A	E7946 Sm^R, P_{const}-tfoX, ΔluxO, *pilA* S67C, *lacZ*::FRT-Kan^R-FRT, ΔVC1807::CmR, Δ*pilB*, ΔVCA0692::P_{BAD}-riboswitch-*pilB* Carb^R	This study / TND2378 (SAD2791)
P_{tac}-*pilB* Δ*pilB* Δ*pilT*	Fig. 5B	E7946 Sm^R, P_{const}-tfoX, ΔluxO, *pilA* S67C, Δ*lacZ*::P_{tac}-*pilB* Spec^R, ΔVC1807::CmR, Δ*pilB*, Δ*pilT*::Zeo^R	This study / TND2498
P_{BAD}-*pilB* Δ*pilB* Δ*pilT*	Fig. 5B	E7946 Sm^R, P_{const}-tfoX, ΔluxO, *pilA* S67C, *lacZ*::FRT-Kan^R-FRT, ΔVC1807::CmR, Δ*pilB*, ΔVCA0692::P_{BAD}-*pilB* Carb^R, Δ*pilT*::Zeo^R	This study / TND2501

P_{tac}-riboswitch-*pilB* Δ*pilB* Δ*pilT*	Fig. 5B	E7946 Sm^R, P_{const}-tfoX, ΔluxO, *pilA* S67C, *lacZ*::FRT-Kan^R-FRT, ΔVC1807::CmR, Δ*pilB*, ΔVCA0692::P_{tac}-riboswitch-*pilB* $Carb^R$, Δ*pilT*::Zeo^R	This study / TND2500
P_{BAD}-riboswitch-*pilB* Δ*pilB* Δ*pilT*	Fig. 5B	E7946 Sm^R, P_{const}-tfoX, ΔluxO, *pilA* S67C, *lacZ*::FRT-Kan^R-FRT, ΔVC1807::CmR, Δ*pilB*, ΔVCA0692::P_{BAD}-riboswitch-*pilB* $Carb^R$, Δ*pilT*::Zeo^R	This study / TND2499

Table S2 – *Primers used in this study*

Primer Name	Primer Sequence (5'→3')	Description
BBC832	GCTTTTTGCTACAACGACCG	Replace VCA0692 w/ an ectopic expression construct UP ARM F1 (aka P1 in **Fig. S1**)
BBC828	caccatacccacgccgaaacaaCAGTGATGTAGCGAATCGGAC	Replace VCA0692 w/ an ectopic expression construct UP ARM R1 (aka P2 in **Fig. S1**)
BBC830	gaagcagctccagcctacaGTTGAGTTGGATGCAGCACC	Replace VCA0692 w/ an ectopic expression construct DOWN ARM F2 (aka P7 in **Fig. S1**)
BBC834	CACAATTTCTCGCTTAAAATGTCC	Replace VCA0692 w/ an ectopic expression construct DOWN ARM R2 (aka P8 in **Fig. S1**)
BBC243	TTGTTTCGGCGTGGGTATGGTG	Amplify any ectopic expression construct to move to a new genetic locus F (aka P3 in **Fig. S1**)
BBC203	CCCGGGATCCTGTGTGAAATTG	Primer to clone new ectopic genes into P_{tac} or P_{BAD} constructs R1 (aka P4-2 in **Fig. S1**)
BBC2137	CTTGTTGTTACCTCCTTAGCAGG	Primer to clone new ectopic genes into P_{tac}-riboswitch or P_{BAD}-riboswitch constructs R1 (aka P4-1 in **Fig. S1**)
BBC252	caatttcacacaggatcccgggAGGAGGTAACGTAATGCGTAAAGGAGAAGAAC	F Primer to amplify up *gfp* to clone into P_{tac} or P_{BAD} constructs (aka P5-2 in **Fig. S1**)
BBC2182	cctgctaaggaggtaacaacaagATGCGTAAAGGAGAAGAACTTTTCAC	F Primer to amplify up *gfp* to clone into P_{tac}-riboswitch or P_{BAD}-riboswitch (aka P5-1 in **Fig. S1**)
BBC254	tgtaggctggagctgcttcTTAGTTGTATAGTTCATCCATGCC	R Primer to amplify up *gfp* to clone into any ectopic expression construct (aka P6 in **Fig. S1**)
BBC2427	caatttcacacaggatcccgggAGGAGGTTTTTGTATGCCACAATTTGATATATTATG	F Primer to amplify up *Flp* to clone into P_{tac} or P_{BAD} constructs (aka P5-2 in **Fig. S1**)
BBC2455	cctgctaaggaggtaacaacaagATGCCACAATTTGATATATTATGTAAAAC	F Primer to amplify up *Flp* to clone into P_{tac}-riboswitch or P_{BAD}-riboswitch (aka P5-1 in **Fig. S1**)
BBC2428	tgtaggctggagctgcttcTTATATGCGTCTATTTATGTAGGATG	R Primer to amplify up *Flp* to clone into any ectopic expression construct (aka P6 in **Fig. S1**)
BBC1952	caatttcacacaggatcccgggAGGAGGTTAACTAATGCTCACCAACCTTGTTG	F Primer to amplify up *pilB* to clone into P_{tac} or P_{BAD} constructs (aka P5-2 in **Fig. S1**)
BBC2806	cctgctaaggaggtaacaacaagATGCTCACCAACCTTGTTGC	F Primer to amplify up *pilB* to clone into P_{tac}-riboswitch or P_{BAD}-riboswitch (aka P5-1 in **Fig. S1**)

BBC1953	tgtaggctggagctgcttcTTAAAAGTAGAGCACAC GCTG	R Primer to amplify up *pilB* to clone into any ectopic expression construct (aka P6 in **Fig. S1**)
ABD253	GCGACCCCACCGATGGG	*lacZ*::FRT-Ab^R-FRT F1
ABD263	gtcgacggatccccggaatAACTGATCCAATTTTTC AGCGCATATTTTGG	*lacZ*::FRT-Ab^R-FRT R1
ABD262	gaagcagctccagcctacaTGCCGCAGGAAAACC GCCCCCTaATC	*lacZ*::FRT-Ab^R-FRT F2
ABD256	CCCAAATACGGCAACTTGGCG	*lacZ*::FRT-Ab^R-FRT R2
ABD123	ATTCCGGGGATCCGTCGAC	Amplify any Ab^R cassette F
ABD124	TGTAGGCTGGAGCTGCTTC	Amplify any Ab^R cassette R