A modular chromosomally integrated toolkit for ectopic gene expression in *Vibrio cholerae*

Triana N. Dalia[1], Jennifer L. Chlebek[1], and Ankur B. Dalia[1,*]

[1]Department of Biology, Indiana University, Bloomington, IN 47405

*Author for correspondence: ankdalia@indiana.edu

Abstract

The ability to express genes ectopically in bacteria is essential for diverse academic and industrial applications. Two major considerations when utilizing regulated promoter systems for ectopic gene expression are (1) the ability to titrate gene expression by addition of an exogenous inducer and (2) the leakiness of the promoter element in the absence of the inducer. Here, we describe a modular chromosomally integrated platform for ectopic gene expression in *Vibrio cholerae*. We compare the broadly used promoter elements P_{tac} and P_{BAD} to versions that have an additional theophylline-responsive riboswitch (P_{tac}-riboswitch and P_{BAD}-riboswitch). These constructs all exhibited unimodal titratable induction of gene expression, however, max induction varied with P_{tac} > P_{BAD} > P_{BAD}-riboswitch > P_{tac}-riboswitch. We also developed a sensitive reporter system to quantify promoter leakiness and show that leakiness for P_{tac} > P_{tac}-riboswitch > P_{BAD}; while the newly developed P_{BAD}-riboswitch exhibited no detectable leakiness. We demonstrate the utility of the tightly inducible P_{BAD}-riboswitch construct using the dynamic activity of type IV competence pili in *V. cholerae* as a model system. The modular chromosomally integrated toolkit for ectopic gene expression described here should be valuable for the genetic study of *Vibrio cholerae* and could be adapted for use in other species.

Introduction

Regulated promoter systems for ectopic gene expression have been widely used in bacterial systems. Two commonly employed system for ectopic gene expression are the isopropyl β-d-1-thiogalactopyranoside (IPTG)-inducible *tac* promoter (P_{tac}) and the arabinose inducible *araBAD* promoter (P_{BAD}) (1, 2). Both of these systems, however, exhibit some degree of leakiness, which allows for gene expression in the absence of the inducer when cells are grown in rich LB medium. Leakiness of P_{BAD} can be reduced, to some extent, by addition of glucose to the

growth medium because this promoter is catabolite repressed (3), however, addition of glucose to the growth medium can change the physiology of cells which may introduce a confounding variable for some experiments.

Riboswitches are control elements that can regulate gene expression via direct interactions between a small molecule ligand and mRNA. Synthetic riboswitches that are responsive to the small molecule theophylline have recently been developed, which allow for regulated gene expression in diverse biological systems (4, 5). These riboswitch elements likely fold the mRNA to occlude the ribosome binding site in the absence of theophylline. And binding of theophylline to the riboswitch alters the conformation of the mRNA to expose the ribosome binding site and allow for translation of the downstream gene. For this reason, it is important to note that these riboswitches likely have limited utility for controlling the expression of genetic elements like non-coding RNAs, which do not need to be translated to exert their effect.

Generally, plasmids are employed for ectopic gene expression. However, many commonly used plasmids are poorly maintained by *Vibrio* species and/or their copy number can vary relative to model systems like *Escherichia coli* (6, 7). Integration of ectopic expression constructs onto the genome can bypass these issues. For many *Vibrio* species (e.g. *Vibrio cholerae*, *Vibrio natriegens*, *Vibrio campbellii*, *Vibrio vulnificus*, *Vibrio parahaemolyticus*, and *Vibrio fischeri*), it is remarkably easy to integrate novel sequences into the bacterial genome by exploiting their inherent capacity to undergo horizontal gene transfer by natural transformation (8-13), which can be exploited for ectopic gene expression (10, 13-17).

Here, we generate a chromosomally integrated modular platform for ectopic gene expression in *Vibrio* species based on the widely-used P_{tac} and P_{BAD} promoters in conjunction with a previously described theophylline responsive riboswitch (5). We demonstrate that this toolkit allows for differing levels of ectopic gene expression (i.e. max induction), and that one of these promoter constructs (P_{BAD}-riboswitch) allows for a broad-range of titratable gene expression without detectable leakiness. We highlight the utility of this tight expression construct to study the dynamic surface appendages required for natural transformation in *V. cholerae*.

Results & Discussion

Design of modular ectopic expression constructs

66 All of the ectopic expression constructs are distinct 'cassettes' that can be integrated at any
67 location in the bacterial genome (**Fig. 1**). We accomplish this via simple splicing by overlap
68 extension (SOE) PCR (18) to stitch these expression cassettes to upstream and downstream
69 regions of homology (see **Fig. S1** for details) to generate linear PCR products that can then be
70 integrated into the *V. cholerae* genome by chitin-induced natural transformation (8). Once an
71 expression construct is integrated at a genomic locus, the gene of interest to be ectopically
72 expressed can be easily exchanged by SOE PCR and natural transformation (see **Fig. S1** for
73 details). In this study, all ectopic expression constructs are integrated at the VCA0692 locus.
74 This is a frame-shifted gene in the N16961 reference genome (19). Furthermore, the disruption
75 of VCA0692 does not alter the fitness of *V. cholerae* during growth in rich medium or in
76 environments this facultative pathogen encounters during its pathogenic life cycle (20), thus,
77 highlighting this locus as a useful "neutral" location for the integration of novel sequences.
78 These constructs can also be integrated at other commonly used "neutral" loci in *V. cholerae*
79 including the *lacZ* gene, the frame-shifted transposase VC1807, or within intergenic spaces
80 between convergently transcribed genes (21).
81
82 The constructs for ectopic gene expression have a modular design where all have a linked
83 antibiotic resistance marker (Ab^R) (**Fig. 1**). This Ab^R facilitates selection during integration into
84 the genome by natural transformation and can be easily altered depending on the need. Linked
85 to this Ab^R, there are the gene control elements. For P_{tac} and P_{tac}-riboswitch constructs, this
86 includes the LacIq repressor and *tac* promoter. By contrast the P_{BAD} and P_{BAD}-riboswitch
87 constructs contain AraC and the *araBAD* promoter. Both the P_{tac} and P_{BAD} promoter constructs
88 can be engineered to have a user-defined ribosome binding site (**Fig. S1**). By contrast, the two
89 riboswitch constructs (P_{tac}-riboswitch and P_{BAD}-riboswitch) contain a defined ribosome binding
90 site within the theophylline-dependent riboswitch (riboswitch "E" in (5)) that is located
91 immediately upstream of the gene of interest (**Fig. 1** and **Fig. S1**).
92
93 *Testing inducibility of ectopic expression constructs with GFP*
94 To test whether these different chromosomally integrated constructs allow for inducible gene
95 expression and to compare the maximum level of expression they support, we generated
96 constructs for ectopic expression of *gfp* (22). The maximum level of gene expression varied
97 among constructs with P_{tac} > P_{BAD} > P_{BAD}-riboswitch > P_{tac}-riboswitch (**Fig. 2**). Also, all of these
98 constructs allowed for titratable gene expression (**Fig. 2**). This is particularly notable for P_{BAD},
99 because this inducible system is known to have an "all-or-none" or autocatalytic gene

100 expression phenotype in wildtype strains of *E. coli* (23). This autocatalytic expression profile is
101 due to high affinity transport of arabinose in *E. coli*, which further stimulates increased
102 expression of arabinose transporters. Uncoupling this autoregulatory loop in *E. coli* can allow for
103 titratable gene expression (24). *V. cholerae* does not catabolize arabinose and lacks high affinity
104 arabinose transporters. Arabinose may be transported into *V. cholerae* nonspecifically through
105 one (or more) of its other carbohydrate transporters. Regardless, this low affinity transport of
106 arabinose in *V. cholerae* allows for titratable gene expression from P_{BAD} (**Fig. 2**), which is
107 consistent with a number of previous studies (14, 25). Also, for constructs that contained the
108 additional riboswitch control element (P_{tac}-riboswitch and P_{BAD}-riboswitch), ectopic gene
109 expression was dependent on addition of theophylline (**Fig. 2**), as expected (5).
110
111 *Testing ectopic expression constructs for the distribution of GFP fluorescence within single*
112 *cells*.
113 While we observed titratable gene expression above (**Fig. 2**), this was assessed in bulk
114 cultures. Thus, titratable gene expression could be the result of bimodality in gene expression
115 where cells in the population exhibit either a highly fluorescent or poorly fluorescent phenotype
116 (similar to an ON/OFF light switch); and increased inducer simply results in a shift within the
117 population where a higher proportion of cells exhibit the highly fluorescent phenotype. This is in
118 contrast to titratable gene expression where the population responds uniformly to yield a
119 unimodal distribution where increased inducer simply shifts the fluorescence intensity of the
120 entire population (similar to a dimmer switch). Generally, for ectopic expression constructs the
121 latter phenotype is preferred. To distinguish between these possibilities, we assessed the
122 distribution of fluorescence among single cells within induced populations by epifluorescence
123 microscopy. In the absence of inducer, only the P_{tac} construct exhibited detectable GFP
124 fluorescence (**Fig. 2A and E**), which is consistent with this construct being very leaky in *V.*
125 *cholerae*; a phenotype that is already widely appreciated. In the presence of inducer, all four
126 constructs exhibited unimodal distributions, which supports the latter model and suggests that
127 there is a uniform response to inducer among single cells within the population (**Fig. 3**).
128
129 *Testing leakiness of ectopic expression constructs with Flp recombinase*
130 A major consideration for ectopic expression constructs is leakiness, which is defined as the
131 basal expression of regulated genes in the absence of inducer. As mentioned above, only the
132 P_{tac} construct exhibited detectable leakiness when using GFP fluorescence as a readout. This,
133 however, is a poor readout for leaky gene expression because a substantial amount of GFP

134 protein is required to generate an observable fluorescent readout. We sought to develop a
135 sensitive and easily measured phenotype for leakiness from our ectopic expression constructs.
136 To that end, we employed flippase (Flp), a highly-efficient recombinase that can mediate site-
137 specific recombination between two Flp recombinase target (FRT) sequences (26, 27). Flanking
138 FRT sequences can be engineered to leave behind an in-frame scar following Flp excision (28).
139 To generate a simple readout for Flp-mediated activity, we introduced a FRT-flanked Ab^R into
140 the *lacZ* gene in *V. cholerae* (**Fig. 4A**). Strains with *lacZ*::FRT-Ab^R-FRT yielded a white colony
141 phenotype on X-gal plates. Following Flp-mediated excision, however, the resulting *lacZ* gene
142 (containing an in-frame 81 bp insertion) is active, and strains harboring *lacZ*::FRT exhibit a blue
143 colony phenotype on X-gal plates (**Fig. 4A**). Thus, following Flp-mediated resolution, cells are
144 irreversibly converted from LacZ- (white colonies) to LacZ+ (blue colonies). To determine
145 whether our expression constructs exhibited leaky expression, we generated ectopic expression
146 constructs to drive Flp expression in strains that harbored the *lacZ*::FRT-Ab^R-FRT construct.
147 P_{tac}-*Flp* was so leaky that all cells where we introduced this construct resolved *lacZ*::FRT-Ab^R-
148 FRT to yield only blue colonies even in the absence of inducer. All of the other constructs (P_{tac}-
149 riboswitch-*Flp*, P_{BAD}-*Flp*, and P_{BAD}-riboswitch-*Flp*) yielded only resolved blue colonies when
150 grown in the presence of inducer. In the absence of inducer, both P_{tac}-riboswitch-*Flp* and P_{BAD}-
151 *Flp* exhibited some degree of leakiness, while P_{BAD}-riboswitch-*Flp* did not exhibit any detectable
152 leakiness in this assay (**Fig. 4B**). It is notable that the limit of detection of this assay is ~3 logs
153 below the leakiness observed from the P_{BAD} promoter, a construct that is traditionally considered
154 tightly repressed in the absence of inducer (2, 3). This further validates our Flp-based assay as
155 a highly sensitive approach to assess promoter leakiness.
156
157 *Employing ectopic expression constructs to study the dynamic activity of type IV competence*
158 *pili in V. cholerae*
159 Horizontal gene transfer by natural transformation in *V. cholerae* is dependent on type IV
160 competence pili (29, 30). These pili extend from the bacterial surface, bind to DNA in the
161 environment, and then retract to pull DNA across the outer membrane (29). This ingested DNA
162 can then be translocated into the cytoplasm and integrated into the bacterial genome by
163 homologous recombination. PilB is the motor ATPase that is required for extension of type IV
164 competence pili (31). To study the role of PilB in dynamic pilus activity, we sought to establish a
165 strain that allowed for titratable and tightly regulated control of pilus extension. To that end, we
166 generated strains where the native copy of *pilB* was deleted, and *pilB* expression was
167 ectopically driven by our expression constructs. We then tested whether these strains were

168 naturally transformable when grown without any inducer added. Only leaky expression of *pilB*
169 would allow for natural transformation in this assay because Δ*pilB* mutants are not
170 transformable (**Fig. 5A**). As observed using our Flp reporter readout, in the absence of inducer,
171 P_{tac}, P_{tac}-riboswitch, and P_{BAD} all exhibited leaky expression of *pilB* as evidenced by detectable
172 natural transformation, while there was no detectable leakiness observed for P_{BAD}-riboswitch
173 because no transformants were obtained in this background without inducer added (**Fig. 5A**).
174 Importantly, this experiment was performed in plain LB medium, thus, induction of catabolite
175 repression (by the addition of glucose to the medium) was not necessary to prevent leaky gene
176 expression. As expected, all strains transformed at high rates in the presence of inducer (**Fig.**
177 **5A**). These results suggest that leaky expression of *pilB* from P_{tac}, P_{BAD}, and P_{tac}-riboswitch
178 allow for some degree of pilus assembly even without inducer added, while pilus assembly is
179 completely inhibited in the P_{BAD}-riboswitch construct when no inducer is present. To test this
180 idea further, we deleted the retraction ATPase *pilT* in these strains. This prevents extended pili
181 from being easily retracted and sensitizes the direct observation of pilus assembly via a recently
182 developed pilus labeling approach (32). To determine whether leaky *pilB* expression allowed for
183 pilus assembly, we assessed piliation in strains that were grown in the absence of inducer.
184 Indeed, for P_{tac}, P_{BAD}, and P_{tac}-riboswitch, we observed cells that contained extended pilus fibers
185 (**Fig. 5B**), which is consistent with the leaky expression detected using our Flp recombinase
186 reporter (**Fig. 4B**). We did not, however, observe extended pili in strains with P_{BAD}-riboswitch
187 when grown without inducer (**Fig. 5B**), which is consistent with a lack of leaky expression for
188 this construct (**Fig. 4B**). As expected, all strains generated extended pili when grown with the
189 appropriate inducer (**Fig. 5B**).
190
191 Together, these data indicate that only our newly generated P_{BAD}-riboswitch-*pilB* construct
192 allows for tightly regulated and titratable control of pilus biogenesis / extension in *V. cholerae*.
193 This provides a valuable resource that will be critical for addressing diverse questions related to
194 type IV pilus biology, which will be the focus of future work.
195
196 **Methods**
197 *Bacterial strains and growth conditions*
198 All strains used in this study are derivates of E7946, an El Tor isolate of *V. cholerae* (33). See
199 **Table S1** for a complete list of strains used in this study. Strains were routinely grown at 30°C or
200 37°C in LB Miller broth and agar (BD Difco). When appropriate, media was supplemented with

201 carbenicillin (20 μg/mL), spectinomycin (200 μg/mL), kanamycin (50 μg/mL), trimethoprim (10
202 μg/mL), chloramphenicol (1 μg/mL), or erythromycin (10 μg/mL).
203
204 *Construction of mutant strains*
205 All strains were generated by SOE PCR and chitin-induced natural transformation exactly as
206 previously described (8, 21). See **Fig. S1** for details on how the ectopic expression constructs
207 were assembled and **Table S2** for a detailed list of all primers used to generate all of the mutant
208 constructs in this study. The *araC* – P_{BAD} region for our P_{BAD} and P_{BAD}-riboswitch constructs was
209 amplified from pBAD18-Kan (3). The P_{tac}-riboswitch construct was amplified from DNA
210 generously provided by Kim Seed (15).
211
212 *GFP fluorescence assays*
213 Cells harboring ectopic expression constructs driving *gfp* were grown rolling at 30°C to mid-log
214 in LB medium. Then, inducer was added as indicated in each experiment and cells were grown
215 for two additional hours rolling at 30°C. Next, cells were washed and resuspended to the same
216 optical density in instant ocean medium (7 g/L; Aquarium Systems) and fluorescence was
217 measured on a Biotek H1M plate reader: excitation 500 nm / emission 540 nm exactly as
218 previously described (34). The parent strain lacking any ectopic expression construct was
219 assayed alongside and used to subtract the background fluorescence of cells.
220
221 To image cells for GFP fluorescence, cultures were grown rolling at 30°C in LB medium in the
222 presence of the indicated inducers for 5 hours to late-log. Then, cells were washed in instant
223 ocean medium and mounted on 0.2% gelzan pads made with instant ocean medium exactly as
224 previously described (35).
225
226 *Flp recombinase assays*
227 Cells harboring ectopic expression constructs driving *Flp* and *lacZ*::FRT-Spec^R-FRT were struck
228 out onto LB + X-gal (40 μg/mL) + spectinomycin (200 μg/mL) plates. Single white colonies were
229 picked, inoculated into plain LB medium, and grown overnight rolling at 30°C. Then, each
230 culture was plated quantitatively on LB+Xgal plates to determine the frequency of blue colonies
231 within the population. Empirically, we determined that we could only reliably detect blue colonies
232 at a rate of ~1 in 1,000,000 cells or 0.0001%. This equated to scoring for blue colonies on 100
233 μL spread plates of a dilution of 10^{-3} or greater. If no blue colonies were observed at 10^{-3}, we

234 assumed a single blue colony was present to define the limit of detection for that sample. Data
235 are reported as the % Resolution = (CFU/mL blue colonies / CFU/mL total colonies) x 100.
236
237 *Natural transformation assays*
238 Cells harboring ectopic expression constructs driving *pilB* and the native *pilB* gene deleted were
239 tested for rates of natural transformation. All of these strains also harbored $P_{constitutive}$-*tfoX* and
240 Δ*luxO* mutations, which rendered these strains constitutively competent. Strains were tested for
241 natural transformation using chitin-independent transformation assays exactly as previously
242 described (36). The transforming DNA using in these experiments was 100 ng of a 6 kb
243 ΔVC1807::Erm^R PCR product.
244
245 *Pilus labeling*
246 All strains harbored the indicated ectopic expression construct, a cysteine amino acid
247 substitution in the major pilin subunit PilA ($PilA^{S56C}$), a deletion of the native copy of *pilB* (Δ*pilB*),
248 $P_{constitutive}$-*tfoX*, a Δ*luxO* mutation, and a deletion of the retraction ATPase *pilT* (Δ*pilT*). Strains
249 were grown and labeled with Alexa fluor 488-maleimide exactly as previously described (36).
250 And mounted on 0.2% gelzan pads made with instant ocean medium.
251
252 *Microscopy*
253 Phase contrast and fluorescence images were collected on a Nikon Ti-2 microscope using a
254 Plan Apo ×60 objective, a GFP filter cube, a Hamamatsu ORCAFlash 4.0 camera and Nikon
255 NIS Elements imaging software. For **Fig. 2E**, the lookup tables for each phase and fluorescent
256 image were adjusted to the same range so that they can be compared between samples.
257 Fluorescence intensity of cells was determined using the MicrobeJ plugin (37) in Fiji (38).
258
259 **Acknowledgements**
260 We gratefully acknowledge Eric Bruger, Christopher Marx, Julia van Kessel, and Johann Strnat
261 for helpful discussions; and Kim Seed for generously providing DNA with the P_{tac}-riboswitch
262 construct. This work was supported by funds from the National Science Foundation (1714949),
263 Department of Energy (DE-SC0019436), and the National Institutes of Health (R35GM128674)
264 to ABD.
265
266 **References**

267 1. de Boer HA, Comstock LJ, Vasser M. 1983. The tac promoter: a functional hybrid derived
268 from the trp and lac promoters. Proc Natl Acad Sci U S A 80:21-5.
269 2. Lee N, Francklyn C, Hamilton EP. 1987. Arabinose-induced binding of AraC protein to
270 araI2 activates the araBAD operon promoter. Proc Natl Acad Sci U S A 84:8814-8.
271 3. Guzman LM, Belin D, Carson MJ, Beckwith J. 1995. Tight regulation, modulation, and
272 high-level expression by vectors containing the arabinose PBAD promoter. J Bacteriol
273 177:4121-30.
274 4. Lynch SA, Gallivan JP. 2009. A flow cytometry-based screen for synthetic riboswitches.
275 Nucleic Acids Res 37:184-92.
276 5. Topp S, Reynoso CM, Seeliger JC, Goldlust IS, Desai SK, Murat D, Shen A, Puri AW,
277 Komeili A, Bertozzi CR, Scott JR, Gallivan JP. 2010. Synthetic riboswitches that induce
278 gene expression in diverse bacterial species. Appl Environ Microbiol 76:7881-4.
279 6. Tschirhart T, Shukla V, Kelly EE, Schultzhaus Z, NewRingeisen E, Erickson JS, Wang Z,
280 Garcia W, Curl E, Egbert RG, Yeung E, Vora GJ. 2019. Synthetic Biology Tools for the Fast-
281 Growing Marine Bacterium Vibrio natriegens. ACS Synth Biol 8:2069-2079.
282 7. Delavat F, Bidault A, Pichereau V, Paillard C. 2018. Rapid and efficient protocol to
283 introduce exogenous DNA in Vibrio harveyi and Pseudoalteromonas sp. J Microbiol
284 Methods 154:1-5.
285 8. Dalia AB. 2018. Natural Cotransformation and Multiplex Genome Editing by Natural
286 Transformation (MuGENT) of Vibrio cholerae. Methods Mol Biol 1839:53-64.
287 9. Simpson CA, Podicheti R, Rusch DB, Dalia AB, van Kessel JC. 2019. Diversity in Natural
288 Transformation Frequencies and Regulation across Vibrio Species. mBio 10.
289 10. Dalia TN, Hayes CA, Stolyar S, Marx CJ, McKinlay JB, Dalia AB. 2017. Multiplex Genome
290 Editing by Natural Transformation (MuGENT) for Synthetic Biology in Vibrio natriegens.
291 ACS Synth Biol 6:1650-1655.
292 11. Chimalapati S, de Souza Santos M, Servage K, De Nisco NJ, Dalia AB, Orth K. 2018.
293 Natural Transformation in Vibrio parahaemolyticus: a Rapid Method To Create Genetic
294 Deletions. J Bacteriol 200.
295 12. Brooks JF, 2nd, Gyllborg MC, Kocher AA, Markey LE, Mandel MJ. 2015. TfoX-based
296 genetic mapping identifies Vibrio fischeri strain-level differences and reveals a common
297 lineage of laboratory strains. J Bacteriol 197:1065-74.
298 13. Visick KL, Hodge-Hanson KM, Tischler AH, Bennett AK, Mastrodomenico V. 2018. Tools
299 for Rapid Genetic Engineering of Vibrio fischeri. Appl Environ Microbiol 84.
300 14. Lo Scrudato M, Blokesch M. 2012. The regulatory network of natural competence and
301 transformation of Vibrio cholerae. PLoS Genet 8:e1002778.
302 15. McKitterick AC, Seed KD. 2018. Anti-phage islands force their target phage to directly
303 mediate island excision and spread. Nat Commun 9:2348.
304 16. Borgeaud S, Blokesch M. 2013. Overexpression of the tcp gene cluster using the T7 RNA
305 polymerase/promoter system and natural transformation-mediated genetic engineering
306 of Vibrio cholerae. PLoS One 8:e53952.
307 17. Dalia AB, Lazinski DW, Camilli A. 2014. Identification of a membrane-bound
308 transcriptional regulator that links chitin and natural competence in Vibrio cholerae.
309 MBio 5:e01028-13.

310 18. Horton RM, Hunt HD, Ho SN, Pullen JK, Pease LR. 1989. Engineering hybrid genes
311 without the use of restriction enzymes: gene splicing by overlap extension. Gene 77:61-
312 8.
313 19. Heidelberg JF, Eisen JA, Nelson WC, Clayton RA, Gwinn ML, Dodson RJ, Haft DH, Hickey
314 EK, Peterson JD, Umayam L, Gill SR, Nelson KE, Read TD, Tettelin H, Richardson D,
315 Ermolaeva MD, Vamathevan J, Bass S, Qin H, Dragoi I, Sellers P, McDonald L, Utterback
316 T, Fleishmann RD, Nierman WC, White O, Salzberg SL, Smith HO, Colwell RR, Mekalanos
317 JJ, Venter JC, Fraser CM. 2000. DNA sequence of both chromosomes of the cholera
318 pathogen Vibrio cholerae. Nature 406:477-83.
319 20. Kamp HD, Patimalla-Dipali B, Lazinski DW, Wallace-Gadsden F, Camilli A. 2013. Gene
320 fitness landscapes of Vibrio cholerae at important stages of its life cycle. PLoS Pathog
321 9:e1003800.
322 21. Dalia AB, McDonough E, Camilli A. 2014. Multiplex genome editing by natural
323 transformation. Proc Natl Acad Sci U S A 111:8937-42.
324 22. Cormack BP, Valdivia RH, Falkow S. 1996. FACS-optimized mutants of the green
325 fluorescent protein (GFP). Gene 173:33-8.
326 23. Siegele DA, Hu JC. 1997. Gene expression from plasmids containing the araBAD
327 promoter at subsaturating inducer concentrations represents mixed populations. Proc
328 Natl Acad Sci U S A 94:8168-72.
329 24. Khlebnikov A, Risa O, Skaug T, Carrier TA, Keasling JD. 2000. Regulatable arabinose-
330 inducible gene expression system with consistent control in all cells of a culture. J
331 Bacteriol 182:7029-34.
332 25. Judson N, Mekalanos JJ. 2000. TnAraOut, a transposon-based approach to identify and
333 characterize essential bacterial genes. Nat Biotechnol 18:740-5.
334 26. Broach JR, Guarascio VR, Jayaram M. 1982. Recombination within the yeast plasmid
335 2mu circle is site-specific. Cell 29:227-34.
336 27. Cox MM. 1983. The FLP protein of the yeast 2-microns plasmid: expression of a
337 eukaryotic genetic recombination system in Escherichia coli. Proc Natl Acad Sci U S A
338 80:4223-7.
339 28. Baba T, Ara T, Hasegawa M, Takai Y, Okumura Y, Baba M, Datsenko KA, Tomita M,
340 Wanner BL, Mori H. 2006. Construction of *Escherichia coli* K-12 in-frame, single-gene
341 knockout mutants: the Keio collection. Mol Syst Biol 2:2006 0008.
342 29. Ellison CK, Dalia TN, Vidal Ceballos A, Wang JC, Biais N, Brun YV, Dalia AB. 2018.
343 Retraction of DNA-bound type IV competence pili initiates DNA uptake during natural
344 transformation in Vibrio cholerae. Nat Microbiol 3:773-780.
345 30. Seitz P, Blokesch M. 2013. DNA-uptake machinery of naturally competent Vibrio
346 cholerae. Proc Natl Acad Sci U S A 110:17987-92.
347 31. Ellison CK, Kan J, Chlebek JL, Hummels KR, Panis G, Viollier PH, Biais N, Dalia AB, Brun YV.
348 2019. A bifunctional ATPase drives tad pilus extension and retraction. Sci Adv
349 5:eaay2591.
350 32. Ellison CK, Dalia TN, Dalia AB, Brun YV. 2019. Real-time microscopy and physical
351 perturbation of bacterial pili using maleimide-conjugated molecules. Nat Protoc
352 doi:10.1038/s41596-019-0162-6:In Press. .

33. Miller VL, DiRita VJ, Mekalanos JJ. 1989. Identification of toxS, a regulatory gene whose product enhances toxR-mediated activation of the cholera toxin promoter. J Bacteriol 171:1288-93.
34. Dalia AB. 2016. RpoS is required for natural transformation of Vibrio cholerae through regulation of chitinases. Environ Microbiol 18:3758-3767.
35. Dalia AB, Dalia TN. 2019. Spatiotemporal Analysis of DNA Integration during Natural Transformation Reveals a Mode of Nongenetic Inheritance in Bacteria. Cell 179:1499-1511 e10.
36. Chlebek JL, Hughes HQ, Ratkiewicz AS, Rayyan R, Wang JC, Herrin BE, Dalia TN, Biais N, Dalia AB. 2019. PilT and PilU are homohexameric ATPases that coordinate to retract type IVa pili. PLoS Genet 15:e1008448.
37. Ducret A, Quardokus EM, Brun YV. 2016. MicrobeJ, a tool for high throughput bacterial cell detection and quantitative analysis. Nat Microbiol 1:16077.
38. Schindelin J, Arganda-Carreras I, Frise E, Kaynig V, Longair M, Pietzsch T, Preibisch S, Rueden C, Saalfeld S, Schmid B, Tinevez JY, White DJ, Hartenstein V, Eliceiri K, Tomancak P, Cardona A. 2012. Fiji: an open-source platform for biological-image analysis. Nat Methods 9:676-82.

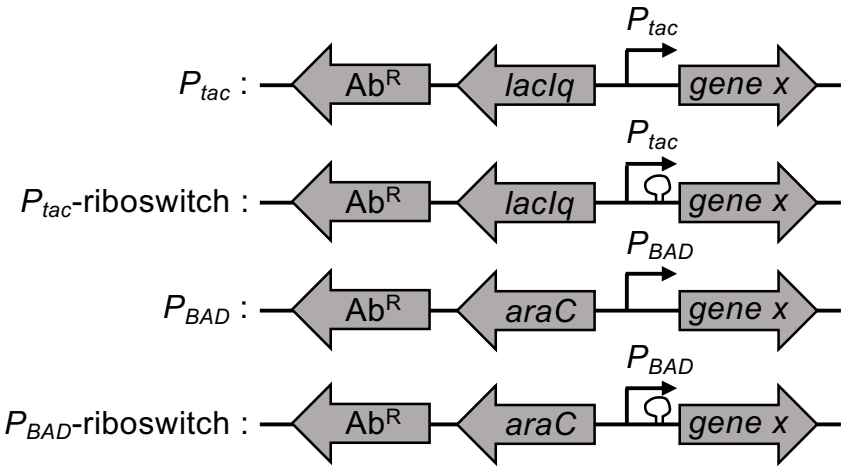

Fig. 1 – *Diagram of ectopic expression constructs*. The four ectopic expression constructs characterized in this study are indicated. All have a linked antibiotic resistance cassette (Ab^R) to facilitate selection during integration into the genome by natural transformation. The gene encoding a transcription factor (*lacIq* or *araC*) and the promoter (P_{tac} or P_{BAD}) required for inducible gene regulation are indicated. The presence of a theophylline-dependent riboswitch is demarcated by a loop before the gene of interest (*gene x*). For details on how these constructs were assembled, see **Fig. S1**.

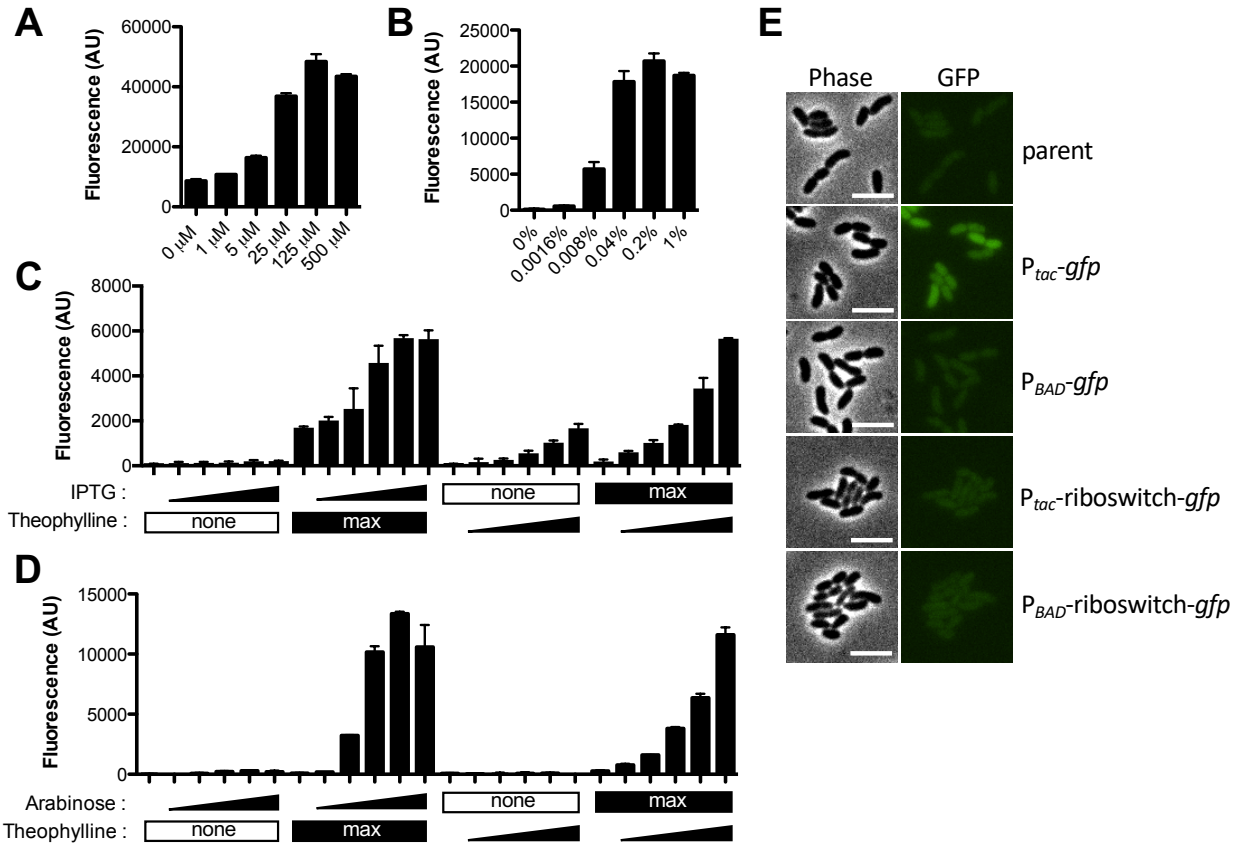

Fig. 2 – *Testing inducibility of ectopic expression constructs with GFP*. (**A**-**D**) Cells harboring ectopic expression constructs driving *gfp* integrated at the VCA0692 locus were grown with inducer as indicated and assessed for GFP fluorescence in bulk cultures on a plate reader. (**A**) Cells with a P$_{tac}$-*gfp* construct were grown with the indicated amount of IPTG. (**B**) Cells with a P$_{BAD}$-*gfp* construct were grown with the indicated amount of arabinose. (**C**) Cells with a P$_{tac}$-riboswitch construct were grown with increasing doses (denoted by a triangle below bars) of IPTG (from left to right: 0 μM, 1 μM, 5 μM, 25 μM, 125 μM, 500 μM) or theophylline (from left to right: 0 mM, 0.018 mM, 0.054 mM, 0.16 mM, 0.5 mM, 1.5mM). 'Max' below bars denotes that cells were incubated with the highest concentration of IPTG (500 μM) or theophylline (1.5 mM) as indicated, while 'none' indicates that none of that inducer was added. (**D**) Cells with a P$_{BAD}$-riboswitch construct were grown with increasing doses (denoted by a triangle below bars) of arabinose (from left to right: 0%, 0.0016%, 0.008%, 0.04%, 0.2%, 1%) or theophylline (from left to right: 0 mM, 0.018 mM, 0.054 mM, 0.16 mM, 0.5 mM, 1.5mM). 'Max' below bars denotes that cells were incubated with the highest concentration of arabinose (1%) or theophylline (1.5 mM) as indicated, while 'none' indicates that none of that inducer was added. All data in **A**-**D** are from at least two independent biological replicates and shown as the mean ± SD. (**E**) Representative phase and epifluorescence images of cells with the indicated ectopic expression construct grown without any inducer added. Scale bar, 4 μM.

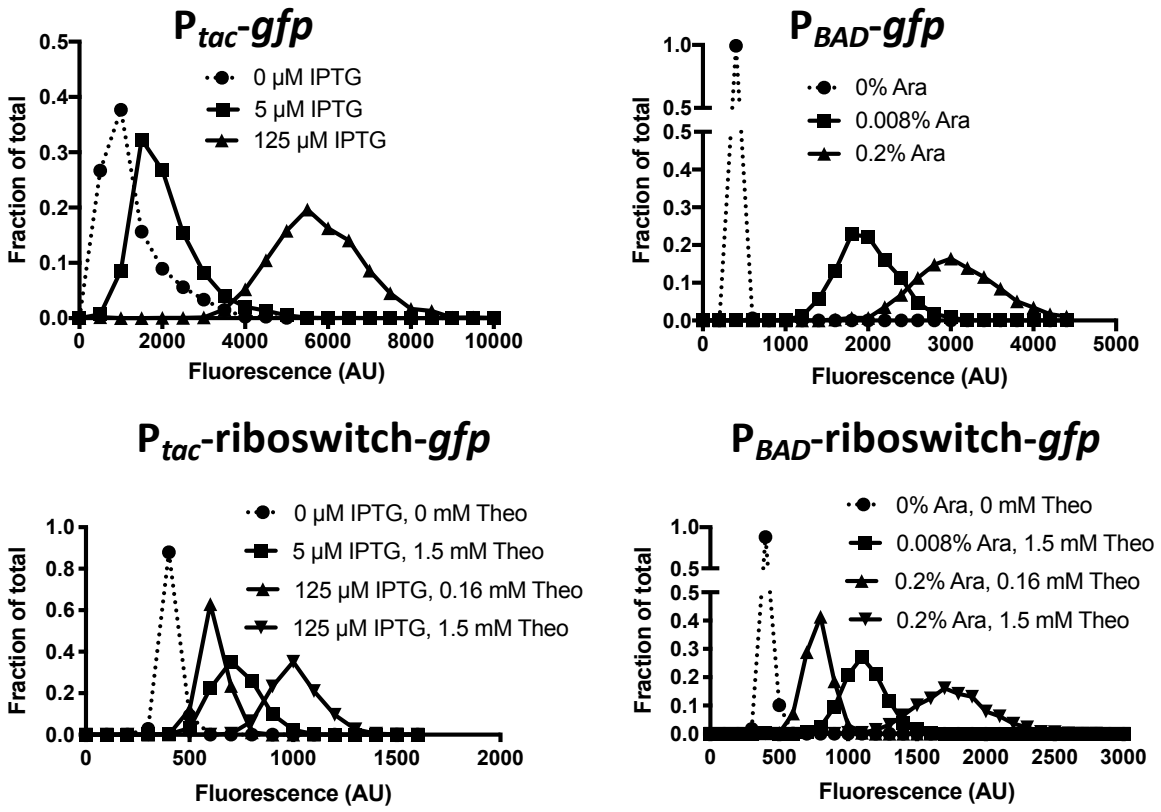

Fig. 3 – ***Testing ectopic expression constructs for the distribution of GFP fluorescence within single cells.*** Cells harboring the indicated ectopic expression constructs integrated at the VCA0692 locus were grown with inducer as indicated and assessed for GFP fluorescence in single cells via epifluorescence microscopy (Theo = theophylline; Ara = arabinose). The distribution of fluorescence among cells in the population is indicated on the plotted histograms. Data are from >1000 cells per condition tested and representative of two independent experiments.

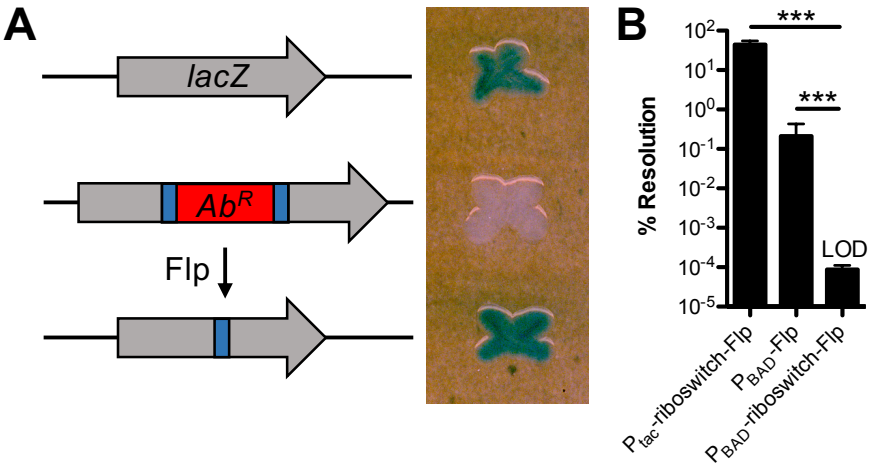

Fig. 4 – *Testing leakiness of ectopic expression constructs with Flp recombinase.* (**A**) Diagram of the approach used to test leakiness in gene expression with Flp recombinase. Wildtype *V. cholerae* cells have intact *lacZ* and form blue colonies on X-gal plates (top). Cells with *lacZ*::FRT-Ab^R-FRT have inactive LacZ and are white on X-gal plates (middle). Flp recombination resolves the FRT-Ab^R-FRT cassette within *lacZ* (making *lacZ*::FRT), which restores LacZ activity (bottom). (**B**) Single colonies of cells harboring the indicated ectopic expression constructs integrated at the VCA0692 locus and *lacZ*::FRT-Ab^R-FRT were grown in LB medium without any inducer overnight. Then, % resolution of *lacZ*::FRT-Ab^R-FRT was determined by plating for quantitative culture on X-gal plates. Percent resolution is defined as the number of blue colonies / total CFUs. Data in **B** are from 6 independent biological replicates and shown as the mean ± SD. Statistical comparisons were made by one-way ANOVA with Tukey's post-test. LOD, limit of detection, *** = $P < 0.001$.

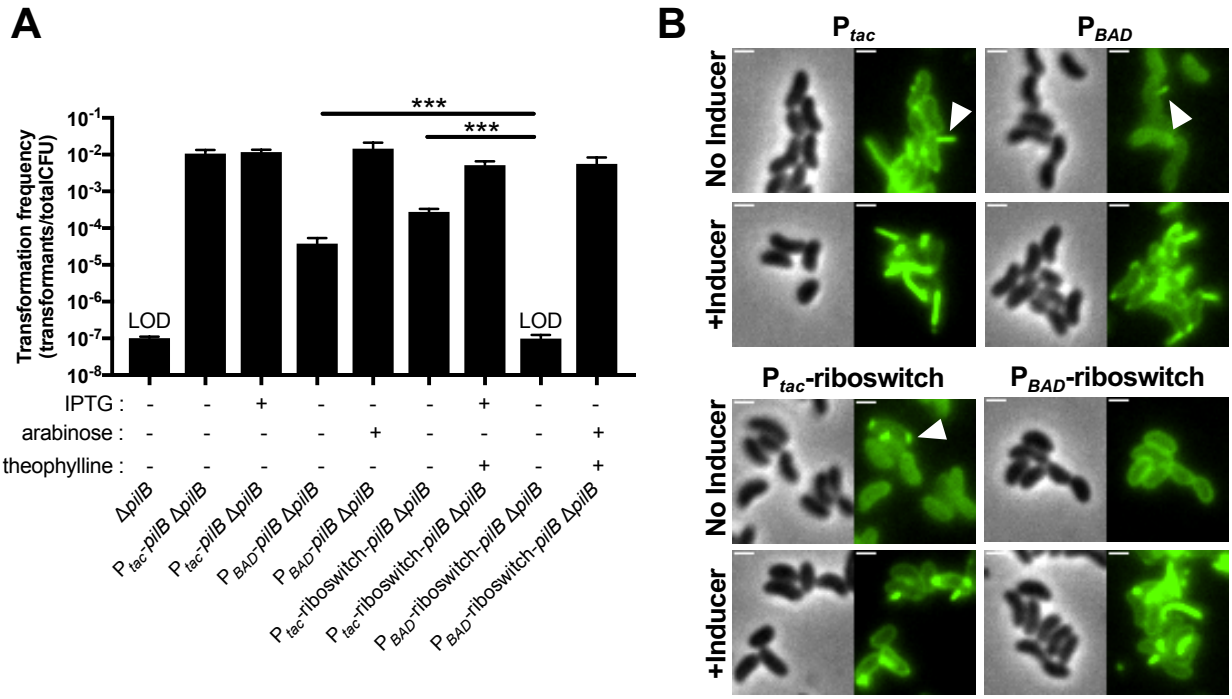

Fig. 5 – *Employing ectopic expression constructs to study the type IV competence pilus extension ATPase PilB.* (**A**) Natural transformation of the indicated strains was tested. All ectopic expression constructs in these strains were integrated at the VCA0692 locus. IPTG (100 μM), arabinose (0.2%), and/or theophylline (1.5 mM) were added to reactions as indicated below each bar. Data are from at least 3 independent biological replicates and shown as the mean ± SD. Statistical comparisons were made by one-way ANOVA with Tukey's post-test. LOD, limit of detection, *** = $P < 0.001$. (**B**) Representative images of surface piliation. All strains harbor Δ*pilB* and Δ*pilT* mutations at the native locus and the indicated ectopic *pilB* expression construct. Where indicated, cells were grown with inducer as follows: 100 μM IPTG for P_{tac}, 0.2% arabinose for P_{BAD}, 100 μM IPTG + 1.5 mM theophylline for P_{tac}-riboswitch, and 0.2% arabinose + 1.5 mM theophylline for P_{BAD}-riboswitch. Examples of extended pili in no inducer samples are indicated by white arrows. Scale bars, 1 μm.

Supporting Information for

A modular chromosomally integrated toolkit for ectopic gene expression in *Vibrio cholerae*

Triana N. Dalia[1], Jennifer L. Chlebek[1], and Ankur B. Dalia[1,*]

[1]Department of Biology, Indiana University, Bloomington, IN 47405

*Author for correspondence: ankdalia@indiana.edu

This PDF file includes:

Fig. S1
Tables S1-S2

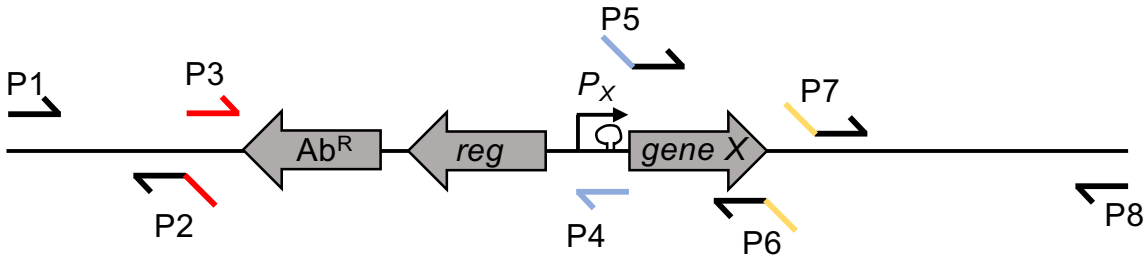

P1: BBC832 - GCTTTTTGCTACAACGACCG
P2: BBC828 - caccatacccacgccgaaacaaCAGTGATGTAGCGAATCGGAC
P3: BBC243 - TTGTTTCGGCGTGGGTATGGTG
P4-1 (P_{tac}-riboswitch or P_{BAD}-riboswitch): BBC2137 - CTTGTTGTTACCTCCTTAGCAGG
P5-1 (P_{tac}-riboswitch or P_{BAD}-riboswitch): cctgctaaggaggtaacaacaagATGXXXXXX
P4-2 (P_{tac} or P_{BAD}): BBC203 - CCCGGGATCCTGTGTGAAATTG
P5-2 (P_{tac} or P_{BAD}): caatttcacacaggatcccgggAGGAGGTNNNNNNATGXXXXXX
P6: tgtaggctggagctgcttcTTAYYYYYY
P7: BBC830 - gaagcagctccagcctacaGTTGAGTTGGATGCAGCACC
P8: BBC834 - CACAATTTCTCGCTTAAAATGTCC

Fig. S1 - *Details on how to assemble the ectopic expression constructs and swap out genes of interest.* A generic diagram of the ectopic expression construct is shown with the location of different primers needed to initially construct each expression construct (P1, P2, P3, P6, P7, and P8). As well as the primers to insert novel genes of interest into established expression constructs (P1, P4, P5, P6, P7, and P8). Ab^R = antibiotic resistance cassette, reg = regulatory gene (*lacIq* or *araC*), P_X = the promoter (P_{tac}, P_{BAD}, P_{tac}-riboswitch, or P_{BAD}-riboswitch), and gene X = the gene of interest.

Establishing ectopic expression constructs at new genomic locations: The UP arm of homology is generated with P1 and P2, while the DOWN arm of homology is amplified with P7 and P8. In this example, these primers amplify homology arms to integrate the ectopic expression constructs into *V. cholerae* ChII. P2 and P7 contain tails that overlap any of the 4 ectopic expression constructs. To move intact expression constructs to new locations in the genome, they can be amplified with P3 and P6. This can serve as a MIDDLE arm to stitch to the UP and DOWN arms of homology.

To insert new genes of interest:

Once an ectopic expression construct has been introduced to a genetic locus, the gene of interest can be swapped out.

-To amplify a gene of interest to place within P_{tac}-riboswitch or P_{BAD}-riboswitch the forward P5-1 primer must have a 5' overlap region as indicated. Immediately after this overlap should be the start codon for the gene of interest (highlighted in green) + additional sequence to serve as a primer for the gene of interest (denoted by 'XXXXXX'). P5-1 overlaps with P4-1 (blue highlighted sequence), which sits within the theophylline-dependent riboswitch. Thus, the same overlap can be used to make either P_{tac}-riboswitch or P_{BAD}-riboswitch constructs. The reverse P6 primer for the gene of interest must have the tail indicated, which should be immediately followed by the stop codon of the gene (highlighted in purple – TAA stop codon in this example) + additional sequence to serve as a primer for the gene of interest (denoted by 'YYYYYY').
-To amplify a gene of interest to place within P_{tac} or P_{BAD} the forward P5-2 primer must have the 5' overlap region indicated. Immediately after this overlap should be the desired ribosome binding site (indicated in bold and underline – the 'optimal' RBS AGGAGGT is used in this example), which should be followed by a 6 bp spacer (this spacing between the ribosome binding site and the start codon is essential for optimal translation and can be derived from the native gene) + the start codon (highlighted in green) + additional sequence to serve as a primer for the gene of interest (denoted by 'XXXXXX'). P5-2 overlaps with P4-2 (blue highlighted sequence), which sits downstream of the two promoter elements. Thus, the same overlap can be used to make either P_{tac} or P_{BAD} constructs. The reverse P6 primer for the gene of interest can be made exactly as described above.

All amplified genes of interest serve as MIDDLE arms in SOE reactions with an UP arm amplified with P1 and P4, and a DOWN arm amplified with P7 and P8.

Table S1 – *Strains used in this study*

Name	Relevant figure(s)	Full genotype	Reference / Strain#
parent	Fig. 2E	E7946 *lacZ*::FRT-Spec^R-FRT	This study / SAD035
P_{tac}-*gfp*	Fig. 2A, E; Fig. 3	E7946 *lacZ*::FRT-Spec^R-FRT, ΔVCA0692::P_{tac}-*gfp* Carb^R	This study / TND2290 (SAD2780)
P_{BAD}-*gfp*	Fig. 2B, E; Fig. 3	E7946 *lacZ*::FRT-Spec^R-FRT, ΔVCA0692::P_{BAD}-*gfp* Carb^R	This study / TND2291 (SAD2781)
P_{tac}-riboswitch-*gfp*	Fig. 2C, E; Fig. 3	E7946 *lacZ*::FRT-Spec^R-FRT, ΔVCA0692::P_{tac}-riboswitch-*gfp* Carb^R	This study / TND2293 (SAD2782)
P_{BAD}-riboswitch-*gfp*	Fig. 2D, E; Fig. 3	E7946 *lacZ*::FRT-Spec^R-FRT, ΔVCA0692::P_{BAD}-riboswitch-*gfp* Carb^R	This study / TND2292 (SAD2783)
wildtype	Fig. 4A	E7946	(25) / SAD031
P_{BAD}-*Flp*	Fig. 4A-B	E7946 *lacZ*::FRT-Spec^R-FRT, ΔVCA0692::P_{BAD}-*Flp* Carb^R	This study / TND2083 (SAD2784)
P_{tac}-riboswitch-*Flp*	Fig. 4B	E7946 *lacZ*::FRT-Spec^R-FRT, ΔVCA0692::P_{tac}-riboswitch-*Flp* Carb^R	This study / TND2289 (SAD2785)
P_{BAD}-riboswitch-*Flp*	Fig. 4B	E7946 *lacZ*::FRT-Spec^R-FRT, ΔVCA0692::P_{BAD}-riboswitch-*Flp* Carb^R	This study / TND2086 (SAD2786)
Δ*pilB*	Fig. 5A	E7946 Sm^R, P_{const}-tfoX, ΔluxO, *pilA* S67C, *lacZ*::FRT-Kan^R-FRT, ΔVC1807::CmR, Δ*pilB*	This study / TND2373 (SAD2787)
P_{tac}-*pilB* Δ*pilB*	Fig. 5A	E7946 Sm^R, P_{const}-tfoX, ΔluxO, *pilA* S67C, Δ*lacZ*::P_{tac}-*pilB* Spec^R, ΔVC1807::CmR, Δ*pilB*	This study / JLC769 (SAD2788)
P_{BAD}-*pilB* Δ*pilB*	Fig. 5A	E7946 Sm^R, P_{const}-tfoX, ΔluxO, *pilA* S67C, *lacZ*::FRT-Kan^R-FRT, ΔVC1807::CmR, Δ*pilB*, ΔVCA0692::P_{BAD}-*pilB* Carb^R	This study / TND2403 (SAD2789)
P_{tac}-riboswitch-*pilB* Δ*pilB*	Fig. 5A	E7946 Sm^R, P_{const}-tfoX, ΔluxO, *pilA* S67C, *lacZ*::FRT-Kan^R-FRT, ΔVC1807::CmR, Δ*pilB*, ΔVCA0692::P_{tac}-riboswitch-*pilB* Carb^R	This study / TND2402 (SAD2790)
P_{BAD}-riboswitch-*pilB* Δ*pilB*	Fig. 5A	E7946 Sm^R, P_{const}-tfoX, ΔluxO, *pilA* S67C, *lacZ*::FRT-Kan^R-FRT, ΔVC1807::CmR, Δ*pilB*, ΔVCA0692::P_{BAD}-riboswitch-*pilB* Carb^R	This study / TND2378 (SAD2791)
P_{tac}-*pilB* Δ*pilB* Δ*pilT*	Fig. 5B	E7946 Sm^R, P_{const}-tfoX, ΔluxO, *pilA* S67C, Δ*lacZ*::P_{tac}-*pilB* Spec^R, ΔVC1807::CmR, Δ*pilB*, Δ*pilT*::Zeo^R	This study / TND2498
P_{BAD}-*pilB* Δ*pilB* Δ*pilT*	Fig. 5B	E7946 Sm^R, P_{const}-tfoX, ΔluxO, *pilA* S67C, *lacZ*::FRT-Kan^R-FRT, ΔVC1807::CmR, Δ*pilB*, ΔVCA0692::P_{BAD}-*pilB* Carb^R, Δ*pilT*::Zeo^R	This study / TND2501

P_{tac}-riboswitch-*pilB* Δ*pilB* Δ*pilT*	Fig. 5B	E7946 Sm^R, P_{const}-tfoX, ΔluxO, *pilA* S67C, *lacZ*::FRT-Kan^R-FRT, ΔVC1807::CmR, Δ*pilB*, ΔVCA0692::P_{tac}-riboswitch-*pilB* $Carb^R$, Δ*pilT*::Zeo^R	This study / TND2500
P_{BAD}-riboswitch-*pilB* Δ*pilB* Δ*pilT*	Fig. 5B	E7946 Sm^R, P_{const}-tfoX, ΔluxO, *pilA* S67C, *lacZ*::FRT-Kan^R-FRT, ΔVC1807::CmR, Δ*pilB*, ΔVCA0692::P_{BAD}-riboswitch-*pilB* $Carb^R$, Δ*pilT*::Zeo^R	This study / TND2499

Table S2 – *Primers used in this study*

Primer Name	Primer Sequence (5'→3')	Description
BBC832	GCTTTTTGCTACAACGACCG	Replace VCA0692 w/ an ectopic expression construct UP ARM F1 (aka P1 in **Fig. S1**)
BBC828	caccatacccacgccgaaacaaCAGTGATGTAGCGAATCGGAC	Replace VCA0692 w/ an ectopic expression construct UP ARM R1 (aka P2 in **Fig. S1**)
BBC830	gaagcagctccagcctacaGTTGAGTTGGATGCAGCACC	Replace VCA0692 w/ an ectopic expression construct DOWN ARM F2 (aka P7 in **Fig. S1**)
BBC834	CACAATTTCTCGCTTAAAATGTCC	Replace VCA0692 w/ an ectopic expression construct DOWN ARM R2 (aka P8 in **Fig. S1**)
BBC243	TTGTTTCGGCGTGGGTATGGTG	Amplify any ectopic expression construct to move to a new genetic locus F (aka P3 in **Fig. S1**)
BBC203	CCCGGGATCCTGTGTGAAATTG	Primer to clone new ectopic genes into P_{tac} or P_{BAD} constructs R1 (aka P4-2 in **Fig. S1**)
BBC2137	CTTGTTGTTACCTCCTTAGCAGG	Primer to clone new ectopic genes into P_{tac}-riboswitch or P_{BAD}-riboswitch constructs R1 (aka P4-1 in **Fig. S1**)
BBC252	caatttcacacaggatcccgggAGGAGGTAACGTAATGCGTAAAGGAGAAGAAC	F Primer to amplify up *gfp* to clone into P_{tac} or P_{BAD} constructs (aka P5-2 in **Fig. S1**)
BBC2182	cctgctaaggaggtaacaacaagATGCGTAAAGGAGAAGAACTTTTCAC	F Primer to amplify up *gfp* to clone into P_{tac}-riboswitch or P_{BAD}-riboswitch (aka P5-1 in **Fig. S1**)
BBC254	tgtaggctggagctgcttcTTAGTTGTATAGTTCATCCATGCC	R Primer to amplify up *gfp* to clone into any ectopic expression construct (aka P6 in **Fig. S1**)
BBC2427	caatttcacacaggatcccgggAGGAGGTTTTTGTATGCCACAATTTGATATATTATG	F Primer to amplify up *Flp* to clone into P_{tac} or P_{BAD} constructs (aka P5-2 in **Fig. S1**)
BBC2455	cctgctaaggaggtaacaacaagATGCCACAATTTGATATATTATGTAAAAC	F Primer to amplify up *Flp* to clone into P_{tac}-riboswitch or P_{BAD}-riboswitch (aka P5-1 in **Fig. S1**)
BBC2428	tgtaggctggagctgcttcTTATATGCGTCTATTTATGTAGGATG	R Primer to amplify up *Flp* to clone into any ectopic expression construct (aka P6 in **Fig. S1**)
BBC1952	caatttcacacaggatcccgggAGGAGGTTAACTAATGCTCACCAACCTTGTTG	F Primer to amplify up *pilB* to clone into P_{tac} or P_{BAD} constructs (aka P5-2 in **Fig. S1**)
BBC2806	cctgctaaggaggtaacaacaagATGCTCACCAACCTTGTTGC	F Primer to amplify up *pilB* to clone into P_{tac}-riboswitch or P_{BAD}-riboswitch (aka P5-1 in **Fig. S1**)

BBC1953	tgtaggctggagctgcttcTTAAAAGTAGAGCACAC GCTG	R Primer to amplify up *pilB* to clone into any ectopic expression construct (aka P6 in **Fig. S1**)
ABD253	GCGACCCCACCGATGGG	*lacZ*::FRT-Ab^R-FRT F1
ABD263	gtcgacggatccccggaatAACTGATCCAATTTTTC AGCGCATATTTTGG	*lacZ*::FRT-Ab^R-FRT R1
ABD262	gaagcagctccagcctacaTGCCGCAGGAAAACC GCCCCCTaATC	*lacZ*::FRT-Ab^R-FRT F2
ABD256	CCCAAATACGGCAACTTGGCG	*lacZ*::FRT-Ab^R-FRT R2
ABD123	ATTCCGGGGATCCGTCGAC	Amplify any Ab^R cassette F
ABD124	TGTAGGCTGGAGCTGCTTC	Amplify any Ab^R cassette R