Multicellular feedback control of a genetic toggle-switch in microbial consortia

Davide Fiore[1], Davide Salzano[2], Enric Cristòbal-Cóppulo[3], Josep M. Olm[3], Mario di Bernardo[2,4]

***Abstract*— We describe a multicellular approach to control a target cell population endowed with a bistable toggle-switch. The idea is to engineer a synthetic microbial consortium consisting of three different cell populations. In such a consortium, two populations, the Controllers, responding to some reference input, can induce the switch of a bistable memory mechanism in a third population, the Targets, so as to activate or deactivate some additional functionalities in the cells. Communication among the three populations is established by orthogonal quorum sensing molecules that are used to close a feedback control loop across the populations. The control design is validated via in-silico experiments in BSim, a realistic agent-based simulator of bacterial populations.**

I. INTRODUCTION

The main goal of Synthetic Biology is the design of reliable genetic circuits able to endow living cells with new functionalities [1]. Examples include the development of bacteria able to sense and degrade pollutants (like hydrocarbons or plastic) in the environment (e.g. oceans) [2], or cells that can track and kill cancer cells by releasing drugs at specific locations, limiting dangerous side effects [3].

Biological systems capable of carrying out these complex tasks require the integration of advanced functional components analogous to those of an autonomous robotic systems [4]. Specifically, sensors are needed to perceive stimuli from the environment, actuators to interact with the environment (e.g. production and delivery of desired molecules or drugs), and more importantly, some control logic with a memory mechanism able to make decisions and regulate the cell behavior.

Such a memory mechanism can be implemented by endowing cells with a genetic toggle-switch, whose state can be controlled by appropriately regulating two inducer molecules, aTc and IPTG [5], [6]. External modulation of these input signals can be used to stabilize the cells onto some desired region of interest [6]–[9] or to switch the memory element from one state to the other. This requires closing an *external* feedback loop via an inverted fluorescence microscope and actuated syringes able to feed the cells, hosted in a microfluidics device, with the right concentrations of aTc and IPTG [6], [8].

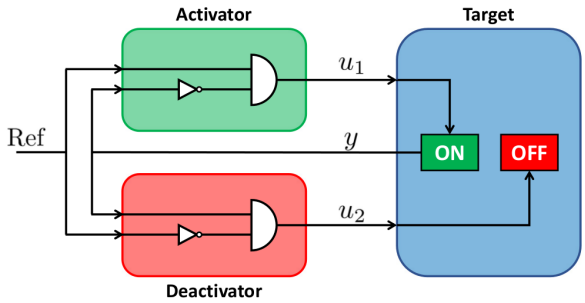

Fig. 1. Representation of the relationship between the cell populations in the consortium and their molecular signals. The Target receives ON commands ($u_1 = 1$) only when $\mathrm{Ref} = 1$ AND $y = 0$ and OFF commands ($u_2 = 1$) only when $\mathrm{Ref} = 0$ AND $y = 1$. In this way, the input signals u_1 and u_2 are equal to 1 only when there is disagreement between Ref and y.

In this letter we present a radically new solution to the problem of controlling a cell population endowed with a toggle-switch. Namely, we take a multicellular control approach [10] and synthesize a microbial consortium comprising three cellular populations communicating with each other via orthogonal quorum sensing molecules. In such a consortium, the state of the toggle-switch endowed in one of the populations, the *Targets*, can be controlled by providing or removing a reference input to the other two, the *Controllers*.

The relationship between the three cell populations in the consortium and their molecular signals can be schematically represented as the logic circuits in Figure 1. The two controller cells sense the concentration in the environment of the reference signal Ref and of the Targets' output y, which is high ($y = 1$) only when the Targets are active. The controllers then generate two control signals u_1 and u_2 according to the following logic functions

$$u_1 = \mathrm{Ref} \text{ AND } (\mathrm{NOT}\, y), \tag{1}$$

$$u_2 = (\mathrm{NOT}\, \mathrm{Ref}) \text{ AND } y, \tag{2}$$

so that the reference signal, Ref, can be used to toggle the switch between the ON state and the OFF state.

In particular, a controller population, the *Activators*, command the activation of the Targets when, at the same time, they perceive the presence of a specific *reference* chemical

[1]Davide Fiore is with the Department of Mathematics and Applications "R. Caccioppoli", University of Naples Federico II, Via Claudio 21, 80126 Naples, Italy. davide.fiore@unina.it

[2]Davide Salzano and Mario di Bernardo are with the Department of Electrical Engineering and Information Technology, University of Naples Federico II, Via Claudio 21, 80125 Naples, Italy. davide.salzano@unina.it

[3]Enric Cristòbal-Cóppulo and Josep M. Olm are with the Department of Mathematics & Institute of Industrial and Control Engineering, Universitat Politècnica de Catalunya, Barcelona, Spain enric525@gmail.com, josep.olm@upc.edu

[4]Mario di Bernardo is also with the Department of Engineering Mathematics, University of Bristol, University Walk, BS8 1TR Bristol, U.K. mario.dibernardo@unina.it

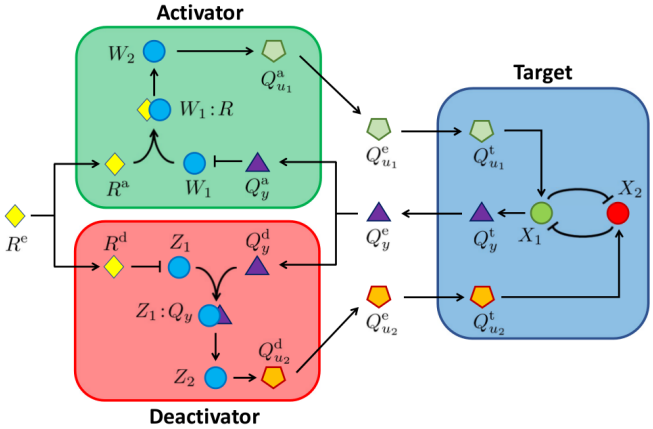

Fig. 2. Abstract biological implementation of the multicellular control of a genetic toggle-switch. The Controllers compare the concentrations of the signaling molecules R and Q_y using an antithetic motif and produce Q_{u_i} according to the logic functions (1)-(2). This, in turn, diffuses inside the Target and promotes the activation of X_i, which makes the Target changes its state. Circles represent internal molecular species and polygons signaling molecules and the reference signal.

signal in the environment and the Targets are inactive, while the other controller population, the *Deactivators*, inhibit the activity of the Targets when they are active and the reference signal is no longer present in the environment.

The crucial challenge we address in this letter is the biological implementation of this novel multicellular control scheme. After proposing a possible realization of all the functions required, we model the three populations and investigate analytically how to engineer the consortium parameters so as to guarantee its desired operation. We then provide in-silico experiments in a realistic agent-based simulator of bacterial populations confirming the viability of the approach.

We wish to emphasize that this control strategy can be used to trigger the active state of the Targets in order to activate or deactivate additional functionalities in the cells, as required in a number of applications. For example, production and secretion of some desired molecule or drug in the environment, e.g. see [3], [11].

II. MULTICELLULAR CONTROL SYSTEM

A schematic biological implementation of the multicellular control strategy we propose is illustrated in Figure 2. The superscripts e, t, a, d are used in the rest of the paper to denote quantities in the environment, Target cells, Activator cells and Deactivator cells, respectively.

Activation and repression of each species is governed by Hill functions with dissociation coefficient θ and exponent n. Moreover, we denote with α_X^0 and α_X the basal and maximal expression rates of species X, and with γ^v the degradation rate of a species within a domain v.

A. Target population

We assume that the bistable memory regulating the activation of the Target cells is implemented by an inducible genetic *toggle-switch* [5], [6]. This genetic network consists of two proteins, X_1 and X_2, each repressing the expression of the other, so that at steady state only one is fully expressed. Without loss of generality, we assume full expression of X_1 corresponds to the "active" state of the cell where some desired functionalities are turned on, while full expression of X_2 corresponds to its inactive state.

We focus here on the problem of toggling the Target population between the two states. Other works in the literature have considered the additional control problem of stabilizing the toggle-switch about some intermediate expression levels of X_1 and X_2, see e.g. [7]–[9], [12]–[14]; a problem we do not address in this paper.

By using the law of mass-action, the dynamical model of the toggle-switch can be given as

$$\dot{x}_1 = \alpha_{x_1}^0 + \frac{\alpha_{x_1}}{1 + \left(\frac{x_2}{\theta_{x_2}}\right)^{n_{x_2}}} - \gamma^{\mathrm{t}}\, x_1 + u_1 \tag{3}$$

$$\dot{x}_2 = \alpha_{x_2}^0 + \frac{\alpha_{x_2}}{1 + \left(\frac{x_1}{\theta_{x_1}}\right)^{n_{x_1}}} - \gamma^{\mathrm{t}}\, x_2 + u_2 \tag{4}$$

where the state variables x_1 and x_2 denote concentrations of molecules X_1 and X_2 inside the cell and we assume u_1 and u_2 capture the effect of two inputs that can be used to toggle the switch between one state and the other.

We assume that the parameters of the toggle-switch are chosen such that in the absence of external inputs, i.e. when $u_1 = u_2 = 0$, the system is bistable [13], [15], that is, system (3)-(4) admits two stable equilibria, $x_1^{\mathrm{eq}} = [\bar{x}_1, \underline{x}_2]$ and $x_2^{\mathrm{eq}} = [\underline{x}_1, \bar{x}_2]$, associated to high expression of species X_1 or X_2, respectively. We also assume, as typically done when studying inducible toggle-switches in synthetic biology, that there exists some positive value $\widehat{u}_1$ ($\widehat{u}_2$) such that, when $u_1 > \widehat{u}_1$ ($u_2 > \widehat{u}_2$) and $u_2 = 0$ ($u_1 = 0$), system (3)-(4) converges to a unique equilibrium point corresponding to high expression of X_1 (X_2) and remains therein when the inputs are switched off.

As shown in Figure 2, we associate each of the inputs of the toggle-switch (3)-(4) in the Targets to the concentration of a quorum sensing molecule coming from the Activator and Deactivator cells. Specifically, we capture the promoting action of the signaling molecule Q_{u_i} on the expression of X_i by setting

$$u_i := \beta_i \cdot \frac{(q_{u_i}^{\mathrm{t}})^{n_{u_i}}}{\theta_{u_i}^{n_{u_i}} + (q_{u_i}^{\mathrm{t}})^{n_{u_i}}}, \qquad i = 1, 2, \tag{5}$$

where $q_{u_i}^{\mathrm{t}}$ denotes the concentration of molecule Q_{u_i} inside the Target cell, and β_i, θ_{u_i} and n_{u_i} are the maximal promoter activity, activation and Hill coefficients, respectively.

In our design, Target cells can signal their state to the other cells by means of another, orthogonal, quorum sensing molecule Q_y that is produced at a rate f_y^{t} proportional to X_1, that is

$$f_y^{\mathrm{t}} := k_y\, x_1, \qquad k_y > 0. \tag{6}$$

Therefore, at steady state, when the cell is active, $f_y^{\mathrm{t}} = k_y\, \bar{x}_1$.

B. Controller populations

The two controllers implement the same logic circuits (Figure 1) and therefore they also share similar biological implementations. However, since the reference molecule R and

signaling molecule Q_y have inverted roles, the biochemical reactions describing the Activator and Deactivator cells are in general different. For the sake of brevity, we next describe only the biological implementation of the Deactivator cells in Figure 2, which is directly taken from [10].

The logic function (2) is realized in the Deactivators by means of an antithetic molecular titration motif. Specifically, the complex $Z_1 : Q_y$ is only formed, as shown in Figure 2, when Z_1 and Q_y react together, but the expression of Z_1, required for this reaction, is also inhibited by the external reference signal R. Q_{u_2} is then generated by Z_2 that is promoted only by the active compound $Z_1 : Q_y$. As a result, the control signal molecule Q_{u_2} is produced and released only when the concentration of R inside the Deactivator cells is low while that of Q_y is high.

By denoting with z_1 and z_2 the concentrations of the species $Z_1 : Q_y$ and Z_2 in the Deactivators, their dynamics can be written as

$$\begin{aligned}\dot{z}_1 = &\left(\alpha^0_{z_1,r} + \alpha_{z_1,r}\,\frac{\theta^{n_{r,z}}_{r,z_1}}{\theta^{n_{r,z}}_{r,z_1} + (r^{\mathrm{d}})^{n_{r,z}}}\right)\\ &\cdot\left(\alpha^0_{z_1,q} + \alpha_{z_1,q}\,\frac{(q^{\mathrm{d}}_y)^{n_{q,z}}}{\theta^{n_{q,z}}_{q,z_1} + (q^{\mathrm{d}}_y)^{n_{q,z}}}\right) - \gamma^{\mathrm{d}}\,z_1\end{aligned} \tag{7}$$

$$\dot{z}_2 = \alpha^0_{z_2} + \alpha_{z_2}\cdot\frac{z_1^{n_z}}{\theta^{n_z}_{z_1} + z_1^{n_z}} - \gamma^{\mathrm{d}}\,z_2 \tag{8}$$

The output signaling molecule Q_{u_2} is produced at a rate $f^{\mathrm{d}}_{u_2}$ proportional to the concentration of Z_2, that is

$$f^{\mathrm{d}}_{u_2} := k_{u_2}\,z_2, \qquad k_{u_2} > 0. \tag{9}$$

Similarly, another antithetic motif is embedded in the Activators so that by denoting with w_1 and w_2 the concentrations of the species $W_1 : R$ and W_2 therein, their dynamics can be written as

$$\begin{aligned}\dot{w}_1 = &\left(\alpha^0_{w_1,q} + \alpha_{w_1,q}\,\frac{\theta^{n_{q,w}}_{q,w_1}}{\theta^{n_{q,w}}_{q,w_1} + (q^{\mathrm{a}}_y)^{n_{q,w}}}\right)\\ &\cdot\left(\alpha^0_{w_1,r} + \alpha_{w_1,r}\,\frac{(r^{\mathrm{a}})^{n_{r,w}}}{\theta^{n_{r,w}}_{r,w_1} + (r^{\mathrm{a}})^{n_{r,w}}}\right) - \gamma^{\mathrm{a}}\,w_1\end{aligned} \tag{10}$$

$$\dot{w}_2 = \alpha^0_{w_2} + \alpha_{w_2}\cdot\frac{w_1^{n_w}}{\theta^{n_w}_{w_1} + w_1^{n_w}} - \gamma^{\mathrm{a}}\,w_2 \tag{11}$$

The Activators will then generate a quorum sensing molecule Q_{u_1} at a rate $f^{\mathrm{a}}_{u_1}$ proportional to the concentration of W_2, that is

$$f^{\mathrm{a}}_{u_1} := k_{u_1}\,w_2, \qquad k_{u_1} > 0. \tag{12}$$

C. Intercellular communication

The intercellular communication between the three populations is realized by means of three orthogonal quorum sensing molecules. Namely, Q_{u_1}, Q_{u_2} and Q_y, which are produced by Activators, Deactivators and Targets, respectively. The quorum sensing molecules and the reference signal molecule R diffuse across the cell membranes with diffusion rate η. For the sake of brevity, in what follows we use the dummy superscript j to denote concentrations of signaling molecules in a generic cell type, where $\mathrm{j} = \mathrm{a}$ for Activators, $\mathrm{j} = \mathrm{d}$ for Deactivators and $\mathrm{j} = \mathrm{t}$ for Targets. The evolution of the concentrations of the signaling molecules *inside* the generic cell of type j can then be given as

$$\dot{r}^{\mathrm{j}} = \eta\,(r^{\mathrm{e}} - r^{\mathrm{j}}) - \gamma^{\mathrm{j}}\,r^{\mathrm{j}} \tag{13}$$

$$\dot{q}^{\mathrm{j}}_{u_1} = f^{\mathrm{j}}_{u_1} + \eta\,(q^{\mathrm{e}}_{u_1} - q^{\mathrm{j}}_{u_1}) - \gamma^{\mathrm{j}}\,q^{\mathrm{j}}_{u_1} \tag{14}$$

$$\dot{q}^{\mathrm{j}}_{u_2} = f^{\mathrm{j}}_{u_2} + \eta\,(q^{\mathrm{e}}_{u_2} - q^{\mathrm{j}}_{u_2}) - \gamma^{\mathrm{j}}\,q^{\mathrm{j}}_{u_2} \tag{15}$$

$$\dot{q}^{\mathrm{j}}_{y} = f^{\mathrm{j}}_{y} + \eta\,(q^{\mathrm{e}}_{y} - q^{\mathrm{j}}_{y}) - \gamma^{\mathrm{j}}\,q^{\mathrm{j}}_{y} \tag{16}$$

where the production functions $f^{\mathrm{a}}_{u_1}$, $f^{\mathrm{d}}_{u_2}$ and f^{t}_{y} are defined in (12), (9) and (6), and $f^{\mathrm{t}}_{u_1} = f^{\mathrm{d}}_{u_1} = 0$, $f^{\mathrm{t}}_{u_2} = f^{\mathrm{a}}_{u_2} = 0$, and $f^{\mathrm{a}}_{y} = f^{\mathrm{d}}_{y} = 0$.

The concentrations of the reference signal molecule and of the quorum sensing molecules secreted by the three cell populations in the environment can be described by the following set of ODEs:

$$\begin{aligned}\dot{r}^{\mathrm{e}} &= r_{\mathrm{in}}(t) + \eta(r^{\mathrm{a}} - r^{\mathrm{e}}) + \eta(r^{\mathrm{d}} - r^{\mathrm{e}}) + \eta(r^{\mathrm{t}} - r^{\mathrm{e}}) - \gamma^{\mathrm{e}} r^{\mathrm{e}}\\ \dot{q}^{\mathrm{e}}_{u_1} &= \eta(q^{\mathrm{a}}_{u_1} - q^{\mathrm{e}}_{u_1}) + \eta(q^{\mathrm{d}}_{u_1} - q^{\mathrm{e}}_{u_1}) + \eta(q^{\mathrm{t}}_{u_1} - q^{\mathrm{e}}_{u_1}) - \gamma^{\mathrm{e}}\,q^{\mathrm{e}}_{u_1}\\ \dot{q}^{\mathrm{e}}_{u_2} &= \eta(q^{\mathrm{a}}_{u_2} - q^{\mathrm{e}}_{u_2}) + \eta(q^{\mathrm{d}}_{u_2} - q^{\mathrm{e}}_{u_2}) + \eta(q^{\mathrm{t}}_{u_2} - q^{\mathrm{e}}_{u_2}) - \gamma^{\mathrm{e}}\,q^{\mathrm{e}}_{u_2}\\ \dot{q}^{\mathrm{e}}_{y} &= \eta(q^{a}_{y} - q^{\mathrm{e}}_{y}) + \eta(q^{d}_{y} - q^{\mathrm{e}}_{y}) + \eta(q^{t}_{y} - q^{\mathrm{e}}_{y}) - \gamma^{\mathrm{e}}\,q^{\mathrm{e}}_{y}\end{aligned}$$

where the function $r_{\mathrm{in}}(t)$ represents the concentration of the reference signal provided externally to influence the cell behavior, γ^{e} is the degradation rate in the environment (assumed to be the same for all species for the sake of simplicity).

III. Consortium engineering

In this section, we show that, in order for the control loop to be effectively closed across the three populations, the parameters characterizing each of the cell populations and the intercellular communication channels must fulfill a set of necessary conditions.

In particular, a set of constraints on the parameters can be derived by analyzing the model equations at steady state, assuming that the number of cells in the three populations are equally balanced and spatial effects are negligible. These assumptions will then be relaxed in the next section where in-silico experiments are carried out also in the presence of cell-to-cell variability and spatio-temporal effects.

a) Feedback loop pathways: We start by making the realistic assumption that $\eta \gg \gamma^{\mathrm{j}}$, $\mathrm{j} \in \{\mathrm{a}, \mathrm{d}, \mathrm{t}\}$, that is, the signaling molecules diffuse through the cellular membrane faster then they are degraded. Hence, when the reference signal fed to the environment is constant and large enough (i.e. $r_{\mathrm{in}}(t) = r^{\mathrm{ON}}_{\mathrm{in}} = \mathrm{const.}$) and the Target cells are not active (i.e. Q_y is not expressed), it is easy to verify that at steady state the concentrations of the signaling molecules R and Q_{u_1} reach the same value in every cells, that is, for all $\mathrm{j} \in \{\mathrm{a}, \mathrm{d}, \mathrm{t}\}$ we have

$$\bar{r}^{\mathrm{j}} = \frac{r^{\mathrm{ON}}_{\mathrm{in}}}{\Gamma}, \qquad \bar{q}^{\mathrm{j}}_{u_1} = \frac{k_{u_1}\,\bar{w}_2}{\Gamma}, \tag{17}$$

where

$$\Gamma = \gamma^{\mathrm{e}} + \gamma^{\mathrm{t}} + \gamma^{\mathrm{a}} + \gamma^{\mathrm{d}} \tag{18}$$

and $\bar{w}_2$ denotes the steady-state value of w_2 when it is fully expressed.

Analogously, for Q_y and Q_{u_2}, when the reference signal $r_{\rm in}$ is absent (i.e. $r_{\rm in}(t) = r_{\rm in}^{\rm OFF} = {\rm const.}$) and the Target cells are initially active (i.e. Q_y is expressed), at steady state for all ${\rm j} \in \{{\rm a}, {\rm d}, {\rm t}\}$ we have

$$\bar{q}_y^{\rm j} = \frac{k_y\,\bar{x}_1}{\Gamma}, \qquad \bar{q}_{u_2}^{\rm j} = \frac{k_{u_2}\,\bar{z}_2}{\Gamma}, \tag{19}$$

where, similarly, $\bar{x}_1$ and $\bar{z}_2$ denotes the steady-state values of x_1 and z_2 when they are fully expressed.

b) Controller cells: In order to guarantee that the Activators and Deactivators implement at steady state the logic functions (1)-(2), it is necessary that only the Activators produce their control signal when the concentrations in the cells of the reference molecule R and Q_y are sufficiently high and low, respectively. Therefore, it must hold that

$$\theta_{r,w_1} < \bar{r}^{\rm a} \quad \text{and} \quad \theta_{r,z_1} < \bar{r}^{\rm d}. \tag{20}$$

Similarly, when the concentrations of R and Q_y are sufficiently low and high, respectively, then, in order that only the Deactivators generate their control signal, it must hold that

$$\theta_{q,w_1} < \bar{q}_y^{\rm a} \quad \text{and} \quad \theta_{q,z_1} < \bar{q}_y^{\rm d}. \tag{21}$$

c) Target cells: In order for the signaling molecules coming from the controllers to toggle the switch within the Targets, the input functions (5) must be such that

$$\beta_i > 2\,\widehat{u}_i, \qquad i = 1, 2, \tag{22}$$

and the concentrations of the quorum sensing molecules within the Targets must be sufficiently high

$$\theta_{u_i} < \bar{q}_{u_i}^{\rm t}, \qquad i = 1, 2, \tag{23}$$

so that the control input is strong enough to trigger the transition from one state to the other and render the toggle-switch monostable.

d) Parameters' constraints: Substituting equations (17)-(19) in conditions (20), (21) and (23), we obtain that, at steady state, the Controllers can activate or deactivate the Targets in response to the presence or absence of the external reference signal $r_{\rm in}(t)$ if the system parameters satisfy (22) and the following conditions are satisfied:

$$\Gamma\,\theta_{r,w_1} < r_{\rm in}^{\rm ON}, \qquad \Gamma\,\theta_{r,z_1} < r_{\rm in}^{\rm ON}, \tag{24}$$

$$\Gamma\,\theta_{q,w_1} < k_y\,\bar{x}_1, \qquad \Gamma\,\theta_{q,z_1} < k_y\,\bar{x}_1, \tag{25}$$

$$\Gamma\,\theta_{u_1} < k_{u_1}\,\bar{w}_2, \qquad \Gamma\,\theta_{u_2} < k_{u_2}\,\bar{z}_2. \tag{26}$$

Using similar arguments, it is also possible to obtain lower bounds for the θs, yielding the parameter constraints

$$r_{\rm in}^{\rm OFF} < \Gamma\,\theta_{r,w_1} < r_{\rm in}^{\rm ON}, \qquad r_{\rm in}^{\rm OFF} < \Gamma\,\theta_{r,z_1} < r_{\rm in}^{\rm ON}, \tag{27}$$

$$k_y\,\underline{x}_1 < \Gamma\,\theta_{q,w_1} < k_y\,\bar{x}_1, \qquad k_y\,\underline{x}_1 < \Gamma\,\theta_{q,z_1} < k_y\,\bar{x}_1, \tag{28}$$

$$k_{u_1}\,\underline{w}_2 < \Gamma\,\theta_{u_1} < k_{u_1}\,\bar{w}_2, \qquad k_{u_2}\,\underline{z}_2 < \Gamma\,\theta_{u_2} < k_{u_2}\,\bar{z}_2, \tag{29}$$

where $\underline{x}_1$, $\underline{w}_2$ and $\underline{z}_2$ denote the steady-state values of the corresponding species when they are completely repressed.

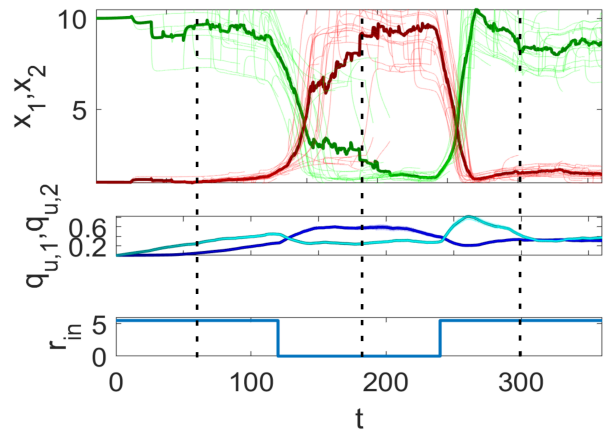

Fig. 3. Evolution of the average (thick lines) and single cell (thin lines) values of the concentrations of repressor proteins x_1 (green) and x_2 (red) in the Target population (top panel) when the reference signal $r_{\rm in}(t)$ (bottom panel) is switched from high to low and vice versa. The middle panel shows the average and individual values of the concentrations of quorum sensing molecules $q_{u,1}^{\rm t}$ (light blue) and $q_{u,2}^{\rm t}$ (dark blue) inside the Target cells.

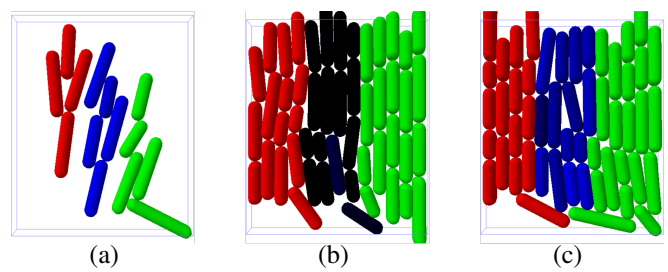

Fig. 4. Snapshots of an agent-based simulation at different time instants (highlighted in Figure 3 with dashed vertical lines). Specifically, panel (a) corresponds to $t = 60$, panel (b) to $t = 180$ and panel (c) to $t = 300$. Activator cells are shown in green, Deactivator cells in red and Target cells are depicted in blue when they are active and black when they are inactive.

The previous conditions represent a set of necessary conditions for the consortium to exhibit its desired multicellular control function.

Remark. Conditions (27)-(29) depend on steady-state values of x_1, w_2 and z_2, which in general would need to be estimated in-silico or quantified experimentally. However, at the price of having more relaxed bounds, conditions not depending on these values can be obtained by approximating Hill functions with step functions (i.e. by letting their coefficient $n \to \infty$) yielding $\underline{x}_1 = \alpha_{x_1}^0/\gamma^{\rm t}$, $\underline{w}_2 = \alpha_{w_2}^0/\gamma^{\rm a}$, $\underline{z}_2 = \alpha_{z_2}^0/\gamma^{\rm d}$, $\bar{x}_1 = (\alpha_{x_1}^0 + \alpha_{x_1})/\gamma^{\rm t}$, $\bar{w}_2 = (\alpha_{w_2}^0 + \alpha_{w_2})/\gamma^{\rm a}$ and $\bar{z}_2 = (\alpha_{z_2}^0 + \alpha_{z_2})/\gamma^{\rm d}$.

IV. IN-SILICO EXPERIMENTS

A. Agent-based simulations

To validate the effectiveness of our multicellular control design, we implemented a set of in-silico experiments via BSim, a realistic agent-based simulator of bacterial populations [16], [17]. In so doing, we modeled a microfluidics chamber of dimensions $13.3\mu{\rm m} \times 16.6\mu{\rm m} \times 1\mu{\rm m}$ and used BSim to take into account cell growth and spatial distribution, diffusion of the signaling molecules, cell-to-cell

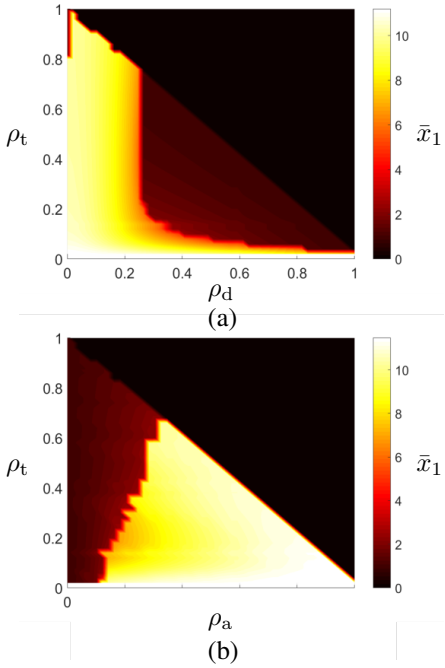

Fig. 5. (a): Steady-state values of x_1 as a function of the ratios of Targets ρ_t and Deactivators ρ_d, with Targets starting from ON state and setting $r_{in} = r_{in}^{OFF}$. (b): Steady-state values of x_1 as a function of the ratios of Targets ρ_t and Activators ρ_a, with Targets starting from OFF state and setting $r_{in} = r_{in}^{ON}$. The total cell population in the consortium is set to $N = 50$. For each cell type $\rho_j = N_j/N$, $j = \{t, a, d\}$, denotes its relative ratio within the consortium. Obviously, $\rho_a + \rho_d + \rho_t = 1$.

variability and geometric constraints. The nominal values of the parameters we used to set up the simulations are reported in Table I. The parameters were chosen heuristically to provide a proof-of-concept of our abstract biological implementation. They are given as dimensionless values and chosen such that conditions (22) and (27)-(29) are fulfilled.

Cell-to-cell variability was modeled by assigning a different set of parameters to daughter cells when they split from their mothers. Specifically, each of their parameters, say μ, was drawn independently from a normal distribution centered at its nominal value $\bar{\mu}$ and with variance $\sigma^2 = 5\% \cdot \bar{\mu}$.

Figures 3 and 4 show the results of a typical in-silico experiment where the Controller cells (depicted in red and green) successfully toggle the Target cells from their active state (depicted in blue) to their inactive state (depicted in black) and vice versa, following changes in the reference signal r_{in}.

B. Robustness to parameter variations

Next, we performed robustness analysis in Matlab to evaluate the effects of (i) varying the ratio between Targets and Controllers in the consortium, and (ii) increasing heterogeneity among cells in each population. To this aim, a total number of $N = 50$ cells was simulated without any growth or spatial locomotion.

Figure 5 shows the values at steady state of x_1 when the Targets are switched OFF (Figure 5a) and ON (Figure 5b), respectively, following the application of the corresponding

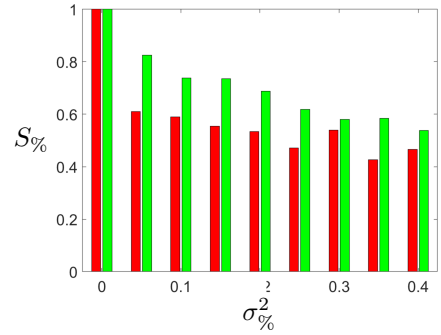

Fig. 6. Percentage of successfully switched Targets ($S_{\%}$) in a balanced population ($N_t = N_a = N_d = 17$) as a function of heterogeneity $\sigma^2_{\%}$. The bar plot in red (green) represents the percentage at steady state of Targets that, starting from ON (OFF) state, are turned OFF (ON) following the reference input r_{in} being switched to r_{in}^{OFF} (r_{in}^{ON}). For each value of the parameter mismatch, the results of 100 simulations were averaged, each obtained by drawing independently all cells' parameters from normal distributions centered on their nominal values, $\bar{\mu}$, and with variance $\sigma^2 = \sigma^2_{\%} \cdot \bar{\mu}$.

reference signal r_{in}, as the ratios of the cell populations in the consortium are being varied. In this scenario, we see that for a wide range of population densities (red region for Deactivators in Figure 5a, white region in Figure 5b for Activators), the Controllers are effectively able to switch the state of Target cells.

Finally, we tested robustness of our design when all parameters of Targets, Activators and Deactivators are perturbed from their nominal values. As shown in Figure 6, even in the presence of a consistent parameter mismatch ($\sigma^2_{\%} = 0.2$), the Controllers are able to activate or deactivate a large fraction of the Targets' population with the Activators showing better performance of the Deactivators in the parameters' region we selected.

V. DISCUSSION AND CONCLUSIONS

We have presented a multicellular control solution to the problem of toggling a memory mechanism in a target cell population. The approach we presented consists in engineering a synthetic microbial consortium of three populations, where two of them act as controllers able to induce activation or deactivation of an inducible genetic switch in the third population, in response to some external reference input. After modeling all the essential components of our design, we discussed some feasibility issues before presenting a careful in-silico investigation of the proposed approach and its robustness to changes in the ratios between the cell populations in the consortium and variations from their nominal parameter values. Our results confirm that the solution we propose is theoretically viable.

The in-vivo implementation of the consortium we propose is currently beyond what is technologically possible but is not unrealistic given that each of the controller population is similar to the reference comparator that was implemented experimentally in [18] and the antithetic feedback controller recently presented in [19]. Also, orthogonal communication channels able to set in place the required interaction between

$\alpha^0_{x_1}$, $\alpha^0_{x_2}$	1	α_{x_1}, α_{x_2}	21.66
$\alpha^0_{z_1,q}$, $\alpha^0_{z_1,r}$	0.08	$\alpha_{z_1,q}$, $\alpha_{z_1,r}$	1.2
$\alpha^0_{z_2}$, $\alpha^0_{w_2}$	0.08	α_{z_2}, α_{w_2}	1.55
$\alpha^0_{w_1,q}$, $\alpha^0_{w_1,r}$	0.26	$\alpha_{w_1,q}$, $\alpha_{w_1,r}$	0.99
n	2	γ^{t}	1.833
$\theta_{r,z1}, \theta_{q,z1}, \theta_{r,w1}, \theta_{q,w1}$	0.5	γ^{d}, γ^{a}	1.33
$\theta_{z_1}, \theta_{w_1}, \theta_{u_1}, \theta_{u_2}$	0.5	β_1, β_2	2
$\theta_{x_1}, \theta_{x_2}$	2	k_y	1.46
k_{u_1}	6	k_{u_2}	3
η	10	γ^{e}	1

TABLE I

NOMINAL SIMULATION PARAMETERS OF THE MULTICELLULAR CONTROL SYSTEM

the three populations are available and have been tested in [20]. A crucial open problem when constructing synthetic cell consortia is to guarantee and maintain a desired ratio between the cell populations to avoid exiting the regions shown in Figure 5 where the required functions are guaranteed.

We wish to emphasize that a simpler implementation of our design can be obtained by considering only a two populations consortium comprising the Target cells and only one population of Activators (or Deactivators). In this case, the multicellular control strategy will only be able to activate initially inactive Targets (or deactivate initially active ones). With this respect our modular multicellular design is resilient as some functions of the consortium will still be present if one controller population is lost (e.g. becomes extinct or washed out).

A possible future application of the design we propose could be its use for the controlled delivery of active molecules or drugs synthesized by the Targets when they are active. Indeed, the consortium is designed so that the drug or active molecule of interest is only produced and secreted when a specific *reference* chemical signal is perceived by the controller cells with production being stopped when such a reference is removed and the Targets are deactivated. By using a cancer biomarker as the reference signal, the Controllers could then be used to activate the Targets to deliver chemotherapy drugs in situ only when the biomarker is detected in the tissue, providing a multicellular feedback control alternative to the open-loop design proposed in [11]. Also, if the reference signal was linked to the presence of some pollutant in the environment, the controlled activation of the Targets cells could be used to synthesize active molecules for bioremediation when and where they are needed.

ACKNOWLEDGMENTS

MdB, DF and DS wish to acknowledge support from the European Union's Horizon 2020 research and innovation programme under grant agreement No 766840 (COSY-BIO). MdB and JO wish to acknowledge support from the University of Naples Federico II Internationalization fund that supported visits and student exchanges within the framework agreement between UPC and the University of Naples Federico II. JO wishes to acknowledge partial support from the Government of Spain through the Agencia Estatal de Investigación Project DPI2017-85404-P and by the Generalitat de Catalunya through the Project 2017 SGR 872.

REFERENCES

[1] D. Del Vecchio, Y. Qian, R. M. Murray, and E. D. Sontag, "Future systems and control research in synthetic biology," *Annual Reviews in Control*, vol. 45, pp. 5–17, 2018.

[2] J. R. Van Der Meer and S. Belkin, "Where microbiology meets microengineering: design and applications of reporter bacteria," *Nature Reviews Microbiology*, vol. 8, pp. 511–522, 2010.

[3] U. Wegmann, A. L. Carvalho, M. Stocks, and S. R. Carding, "Use of genetically modified bacteria for drug delivery in humans: Revisiting the safety aspect," *Scientific Reports*, vol. 7, no. 2294, 2017.

[4] D. B. Pedrolli, N. V. Ribeiro, P. N. Squizato, V. N. de Jesus, D. A. Cozetto, R. B. Tuma, A. Gracindo, M. B. Cesar, P. J. Freire, A. F. da Costa, M. R. Lins, G. G. Correa, and M. O. Cerri, "Engineering microbial living therapeutics: The synthetic biology toolbox," *Trends in Biotechnology*, vol. 37, no. 1, pp. 100 – 115, 2019.

[5] T. S. Gardner, C. R. Cantor, and J. J. Collins, "Construction of a genetic toggle switch in Escherichia coli," *Nature*, vol. 403, p. 339–342, 2000.

[6] J.-B. Lugagne, S. S. Carrillo, M. Kirch, A. Köhler, G. Batt, and P. Hersen, "Balancing a genetic toggle switch by real-time feedback control and periodic forcing," *Nature Communications*, vol. 8, no. 1671, 2017.

[7] D. Fiore, A. Guarino, and M. di Bernardo, "Analysis and control of genetic toggle switches subject to periodic multi-input stimulation," *IEEE Control Systems Letters*, vol. 3, no. 2, pp. 278–283, 2019.

[8] A. Guarino, D. Fiore, and M. di Bernardo, "In-silico feedback control of a MIMO synthetic toggle switch via pulse-width modulation," in *Proc. of the 18th European Control Conference*, 2019, pp. 680–685.

[9] A. Guarino, D. Fiore, D. Salzano, and M. di Bernardo, "Balancing cell populations endowed with a synthetic toggle switch via adaptive pulsatile feedback control," *bioRxiv*, 2019. [Online]. Available: https://www.biorxiv.org/content/early/2019/11/21/851212

[10] G. Fiore, A. Matyjaszkiewicz, F. Annunziata, C. Grierson, N. J. Savery, L. Marucci, and M. di Bernardo, "In-silico analysis and implementation of a multicellular feedback control strategy in a synthetic bacterial consortium," *ACS Synthetic Biology*, vol. 6, no. 3, pp. 507–517, 2016.

[11] M. O. Din, T. Danino, A. Prindle, M. Skalak, J. Selimkhanov, K. Allen, E. Julio, E. Atolia, L. S. Tsimring, S. N. Bhatia, *et al.*, "Synchronized cycles of bacterial lysis for in vivo delivery," *Nature*, vol. 536, pp. 81–85, 2016.

[12] D. Salzano, D. Fiore, and M. di Bernardo, "Ratiometric control for differentiation of cell populations endowed with synthetic toggle switches," in *Proc. of the 58th IEEE Conference on Decision and Control*, 2019, pp. 927–932.

[13] C. C. Samaniego, N. A. Delateur, G. Giordano, and E. Franco, "Biomolecular stabilisation near the unstable equilibrium of a biological system," in *Proc. of the 58th IEEE Conference on Decision and Control*, 2019, pp. 958–964.

[14] L. Chambon and J.-L. Gouzé, "A new qualitative control strategy for the genetic toggle switch," in *Proc. of the 12th IFAC Symposium on Dynamics and Control of Process Systems, including Biosystems*, 2019, pp. 532–537.

[15] J. L. Cherry and F. R. Adler, "How to make a biological switch," *Journal of Theoretical Biology*, vol. 203, no. 2, pp. 117–133, 2000.

[16] T. E. Gorochowski, A. Matyjaszkiewicz, T. Todd, N. Oak, K. Kowalska, S. Reid, K. T. Tsaneva-Atanasova, N. J. Savery, C. S. Grierson, and M. di Bernardo, "BSim: An agent-based tool for modeling bacterial populations in systems and synthetic biology," *PLoS ONE*, vol. 7, no. 8, p. e42790, 2012.

[17] A. Matyjaszkiewicz, G. Fiore, F. Annunziata, C. S. Grierson, N. J. Savery, L. Marucci, and M. di Bernardo, "BSim 2.0: an advanced agent-based cell simulator," *ACS Synthetic Biology*, vol. 6, no. 10, pp. 1969–1972, 2017.

[18] F. Annunziata, A. Matyjaszkiewicz, G. Fiore, C. S. Grierson, L. Marucci, M. di Bernardo, and N. J. Savery, "An orthogonal multi-input integration system to control gene expression in Escherichia coli," *ACS Synthetic Biology*, vol. 6, no. 10, pp. 1816–1824, 2017.

[19] S. K. Aoki, G. Lillacci, A. Gupta, A. Baumschlager, D. Schweingruber, and M. Khammash, "A universal biomolecular integral feedback controller for robust perfect adaptation," *Nature*, vol. 570, pp. 533–537, 2019.

[20] N. Kylilis, Z. A. Tuza, G.-B. Stan, and K. M. Polizzi, "Tools for engineering coordinated system behaviour in synthetic microbial consortia," *Nature Communications*, vol. 9, no. 2667, 2018.