Size-dependent eco-evolutionary feedback loops in exploited ecosystems

Eric Edeline[1,2]*, Nicolas Loeuille[1]

1: Sorbonne Université/UPMC Univ. Paris 06/CNRS/INRA/IRD/Paris Diderot Univ. Paris 07/UPEC/ Institut d'Ecologie et des Sciences de l'Environnement – Paris (iEES-Paris), 4 Place Jussieu, FR-75252 Paris, France.
2: ESE Ecology and Ecosystem Health, INRAE, Agocampus Ouest, 35042 Rennes, France.
* Corresponding author: eric.edeline@inrae.fr

Abstract

Current empirical observations largely suggest a body downsizing in response to harvesting, associated with population declines and decreased harvesting yields. These changes are often construed as direct consequences of harvest selection, where smaller-bodied, early reproducing individuals are immediately favoured. Harvesting and evolution of body size however alter many ecological aspects, affecting for instance competitive and trophic interactions. Such changes reshape the fitness landscape thereby altering the subsequent evolution of body size. Predicting these changes in fitness landscapes, and from there the productivity and dynamics of harvested populations, requires accounting for a constant interplay between ecological and evolutionary changes termed eco-evolutionary feedback loops (EEFLs). We analyze scenarios under which EEFLs acting at the population or community levels either oppose or magnify harvest-induced body downsizing. Opposing EEFLs favour body-size stasis but erode genetic variability and associated body-size evolvability, and may ultimately impair population persistence. In contrast, synergistic EEFLs initially favour population persistence and preserve body-size evolvability, but drive fast evolution towards smaller body sizes and increase the probability for trophic feedbacks that may ultimately lead to population collapse. EEFLs imply that reduced ecological effects of harvesting also produce smaller evolutionary changes, and thus pave the way towards a convergence of the ecological and evolutionary perspectives on harvest management. We advocate for a better consideration of natural selection which effects, we believe, should be integrated among default *a priori* assumption in studies of harvested populations.

Key words: Body size, Co-evolution, Competition, Eco-evolutionary feedbacks, Fisheries, Harvesting, Natural selection, Predation.

Glossary

Evolutionary deterioration: evolutionary change leading to smaller population densities, thereby increasing its probability of extinction (eg, due to demographic stochasticity)

Evolutionary rescue: adaptive evolutionary change that restores positive growth to declining populations and prevents extinction.

Evolutionary suicide: evolutionary dynamics leading to strategies that, though beneficial from an individual fitness point of view, lead to deterministic extinction when adopted by the whole population.

Evolutionary trapping: a viable evolutionary attractor leads to evolutionary suicide.

Evolvability: trait potential to evolve.

Fitness landscape: multidimensional surface depicting fitness as a function of phenotypic traits.

Selection gradient: Trait-specific slope of the fitness landscape, i.e., holding other traits constant.

Introduction

The management of exploited populations is classically based on density-dependent population models in which harvesting, while decreasing population size, alsorelaxes tnegative density-dependence, so that individual biomass productivity is increased (Schaefer 1954, Hilborn and Walters 1992). Since the mid 1990's, however, this classical view has been repeatedly challenged by a number of studies showing that individual somatic growth rate, body size and fecundity (i.e., individual biomass productivity) often tend to decrease, not to increase, with harvesting.

This negative relationship between harvest effort and body size is generally ascribed to harvest-induced evolution, i.e., it is interpreted as a rapid evolutionary response to selection against large-bodied individuals by fishers (Trippel 1995, Law 2000, Kuparinen and Merilä 2007, Fenberg and Roy 2008,

Heino et al. 2015). However, there remain cases where exploitation induces no phenotypic change (Hilborn and Minte-Vera 2008, Devine and Heino 2011, Silva et al. 2013, Marty et al. 2014), or a change towards larger body sizes as predicted by density-dependent population models (Hilborn and Minte-Vera 2008). Therefore, whether harvest-induced evolutionary changes are large and rapid enough to influence population dynamics and biomass productivity is currently hotly debated. As we will show in this essay, phenotypic stasis, selection of smaller or larger body sizes are all compatible with a rapid evolutionary response to fishing, provided that the effects of natural selection are accounted for. We will also discuss how the direction of the evolutionary change depends on the ecological force that regulates the population.

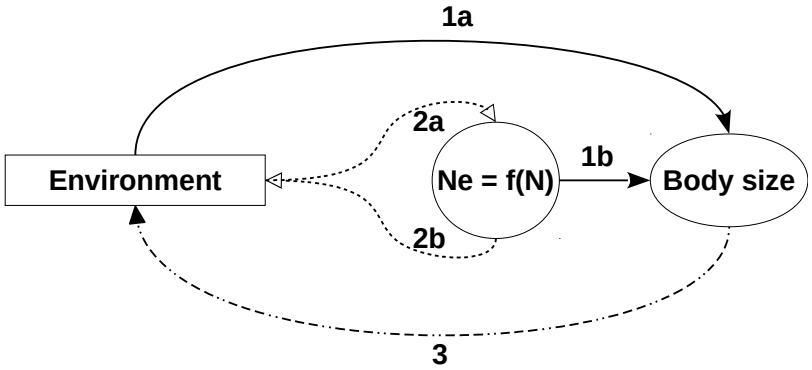

Figure 1. Selection-mediated and evolvability-mediated pathways to size-dependent eco-evolutionary feedback loops (EEFLs). Solid arrows show evolutionary processes, dashed arrows depict density-dependent ecological processes, and the dashed-dotted arrow indicates size-dependent ecological processes. Circular nodes depict population attributes and the rectangular node represents other environmental attributes. The environment generates natural selection on body size, which alters both mean body size value in the population (arrow 1a, e.g., Carlson et al. 2007; Perez & Munch 2010a; Olsen & Moland 2011a), but also body size evolvability (arrow 1b, e.g., Marty et al. 2015a) through density-dependent processes that modify population numbers and effective population size Ne (arrow 2a), which is a function of total population size N (Box 1). In turn, changes in population numbers may feedback on the environment through density-dependent ecological processes (arrow 2b). Body-size changes impact the population's environment through the trait-dependency of ecological interactions (arrow 3, e.g., Palkovacs et al. 2018). Harvesting may trigger or disrupt EEFLs through

direct effects on all three nodes in the system, i.e., through harvest selection on body size, by changing population numbers and body-size evolvability or by altering the environment (e.g., harvesting of a predator or prey of the focal species).

Considering the effects of natural selection requires examining the potential reciprocal feedbacks occurring between phenotypic evolution and ecological change, called eco-evolutionary feedback loops (hereafter EEFLs, see Govaert et al. 2019). EEFLs in response to trophic interactions have been demonstrated experimentally (Yoshida et al. 2003, Hiltunen et al. 2014, Hiltunen and Becks 2014) and probably also occur in the rabbit-myxoma virus system (Fussmann et al. 2007). EEFLs in response to anthropogenic changes have been mainly explored from a theoretical point of view (Dieckmann and Ferrière 2004, Ferrière and Legendre 2013). These theoretical studies stress that EEFLs may proceed through two parallel pathways: a selection-mediated pathway (Arrow 1a, Fig. 1; Box 1) and an evolvability-mediated pathway (Arrow 1b, Fig. 1; Box 1; Glossary).

There are several reasons for considering that harvested systems are highly prone to exhibiting EEFLs. First, trait evolution in response to natural selection may be large and fast (Grant and Grant 2002, Stockwell et al. 2003, Hairston et al. 2005), and the effects of natural selection are thus far from benign. This speed of evolution may be easily explained by the fact that exploited species often have initially large population (hence possibly large evolvability) and that harvesting often creates large fitness differences within the population. Second, Harvest-induced selection is often strong and consistent against large-bodied individuals (Pauly et al. 1998, Carlson et al. 2007, Kuparinen et al. 2009), and harvest-induced change in size-related traits has been shown to be particularly fast (Darimont et al. 2009). In turn, body size is a pleiotropic trait linked to a host of physiological, life

history and ecological attributes of individuals (Peters 1983, Brown et al. 2004, Woodward et al. 2005), and several studies have documented ecosystem ramifications to harvest-induced body downsizing (Shackell et al. 2010, Palkovacs et al. 2018). Hence, rapid evolution of body size has a high potential to induce large ecological effects, which are in turn likely to feed back on body-size evolution through natural selection in size-dependent EEFLs (Fig. 1).

Box1. Defining the selection- and evolvability-mediated pathways to eco-evolutionary feedback loops (EFFLs).

To study existing feedbacks between ecological and evolutionary dynamics, two main frameworks are currently used: quantitative genetics (QG) and adaptive dynamics (AD). Though the two methods differ, they are both based on the idea that the description of trait dynamics in response to selection requires two fundamental ingredients: trait(s) evolutionary potential (hereafter "evolvability") and a measure of selection acting on the trait(s).

Consider for instance the classical recursive equation of quantitative genetics (QG):

$$\bar{x}_{t+1} = \bar{x}_t + \Delta\bar{x} = \bar{x}_t + \underbrace{Va_x}_{Evolvability} \underbrace{\frac{\mathrm{cov}(w,x)}{\mathrm{var}(x)}}_{Selection} \qquad \text{Eq. 1,}$$

where $\bar{x}$ is the mean population value of a univariate trait x, t is generation index, Va_x is additive genetic variance, w is relative individual fitness, and $\frac{\mathrm{cov}(w,x)}{\mathrm{var}(x)}$ is the directional

selection gradient, i.e., the slope of the linear regression between fitness and trait x (Lande and Arnold 1983). Provided that the definition of w includes at least density dependence and/or frequency dependence, Eq. 1 incorporates selection-mediated EEFLs as the ecological context (density or frequency) then impacts the selection term (Abrams 2001). Eco-evolutionary feedback loops may also occur through the evolvability-mediated pathway in Eq. 1, for instance if Va_x is directly linked to the ecological context (eg, an existing correlation between population density and genetic variability) or if Va_x is an explicit function of the strength of selection since strong directional selection is expected to decrease additive genetic variances (Crow 2008).

Adaptive dynamics (AD) (Dieckmann and Law 1996) readily account for both selection- and evolvability-mediated EEFLs. This essential feature of AD is captured by the canonical equation:

$$\frac{d\bar{x}}{dt} = \underbrace{\frac{1}{2}\mu\sigma^2 N^*(x)}_{Evolvability} \underbrace{\frac{\partial W(x',x)}{\partial x'}}_{Selection}\Bigg|_{x'=x} \qquad \text{Eq. 2,}$$

where x is a resident trait, x' is a mutant trait, $d\bar{x}/dt$ is a continuous-time analogue of $\Delta\bar{x}$ in Eq. 1, μ is per capita mutation rate, and σ^2 is phenotypic variance from a mutation. $N^*(x)$ is equilibrium population size for the resident trait, and Eq. 2 hence incorporates the evolvability-mediated pathway to EEFLs since evolvability is explicitly dependent on equilibrium population size $N^*(x)$, which is set by the value of the resident trait x. $W(x',x)$ is invasion fitness for a mutant trait x' in an environment determined by the resident trait x. Because this fitness definition is based on ecological dynamics, one sees that selection-mediated EEFLs are readily

considered in adaptive dynamics models. Finally $(\partial W(x',x))/(\partial x')$ is the directional selection gradient acting on the mutant trait x', i.e., is the invasion criterion (slope of the fitness landscape for x' evaluated in x).

We start by considering only the action of direct harvest-induced selection on body-size evolution, i.e., by considering natural selection-absent dynamics, which is the classical approach so far adopted by most studies of fisheries-induced evolution. Then, we consider natural selection and discuss in particular the influence of competition and predation on body-size evolution. In a third section, we embed our focal evolving species in simple trophic modules and consider monospecific EEFLs, i.e., EEFLs in which only the exploited species evolves in the community. In the fourth section we explore multispecies EEFLs, i.e., EEFLs when more than one species can evolve. In the last section we discuss the practical implications of EEFLs for the management of harvested systems.

1. EEFL-absent dynamics

Even when natural selection is absent, size-selective harvesting may generate multiple evolutionary outcomes. If harvesting targets both immature (juveniles) and adult individuals, an early maturation is favoured which, given a fixed somatic growth rate, also results in a smaller body size at maturation (Roff 1992, Ernande et al. 2004, Heino et al. 2015). However, if harvesting selectively targets only mature (adult) individuals, then a delayed maturation is favoured (Ernande et al. 2004, Heino et al. 2015).

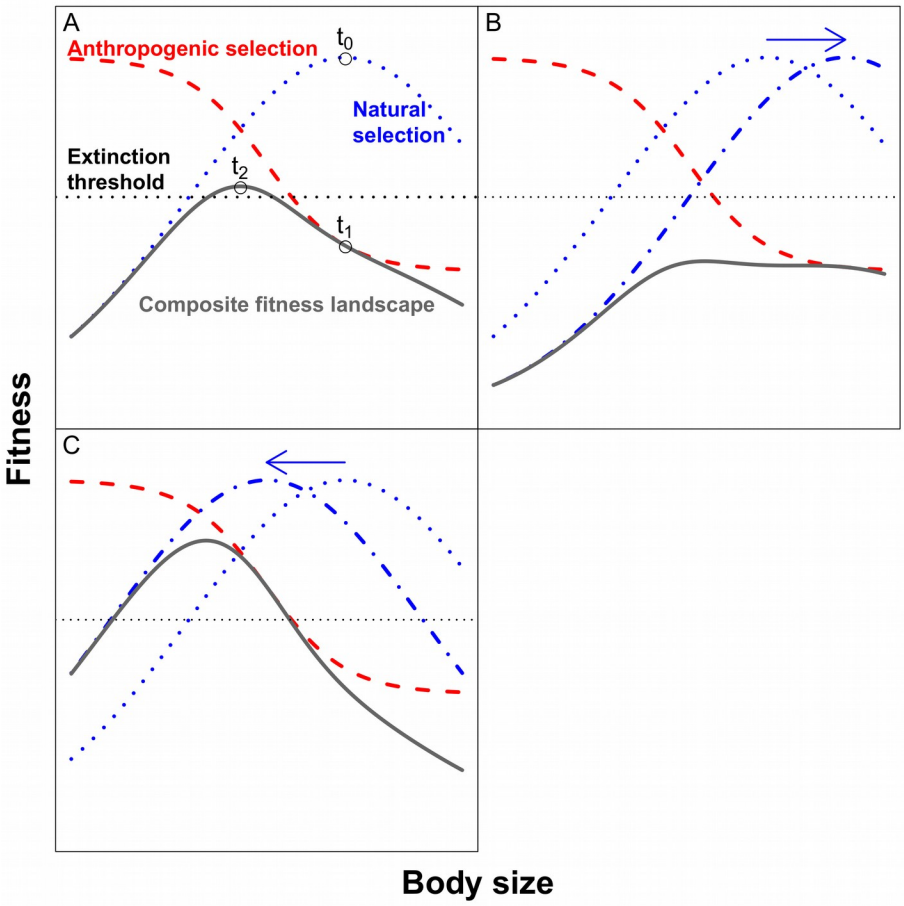

Figure 2. Body size-dependent fitness landscape in harvested populations. A: Evolutionary "rescue" (see Glossary) with no eco-evolutionary feedback loop (EEFL). In the absence of anthropogenic selection, the population mean trait resides at the naturally-selected optimum (dotted blue curve, t_0). The product of natural selection with anthropogenic selection (i.e., survival to harvesting, dashed red curve) instantaneously warps the natural fitness landscape to generate a new, composite fitness landscape (solid grey curve) on which the population mean trait value is associated with a fitness at which the population crosses the extinction threshold (t_1, maladaptation). Rapid adaptive evolution through a few generations towards the newly-selected adaptive optimum restores a fitness at which the population may persist (t_2, *re*-adaptation). **B**: Evolutionary "trapping" (see Glossary) in an antagonistic EEFL. Change in natural selection acts antagonistically with harvest selection, dampens trait change and prevents evolutionary rescue. The arrow shows the change in natural selection due to the environmental feedback from decreasing population density and sketched by the 2b-1a arrow sequence in Fig. 1. **C**: Magnified evolutionary rescue in a synergistic EEFL. The change in natural selection is synergistic with harvest selection, magnifies trait change, and increases probability for evolutionary rescue (same arrow sequence as case B).

Next to maturation schedules, harvesting selection also acts on somatic growth rates yb removing large-bodied individuals at a given age, thus favouring slow-growing genotypes. However, if the strength of selection for earlier maturation overwhelms the strength of selection for slower somatic growth, harvesting may favour the evolution of faster growth rates, as these allow an earlier maturation (Dunlop et al. 2009, Eikeset et al. 2016, Diaz Pauli et al. 2017). In these instances, evolution is entirely driven by the direct effects of the harvesting process. Such effects are density-independent, and do not rely on any changes or feedback in the ecological context (i.e., these are EEFL-absent dynamics).

Most of field or experimental studies suggest that earlier maturation at a smaller body size and decreased somatic growth rates are the dominant responses to harvesting (Le Rouzic et al. unpublished results, Renneville et al. unpublished results, Haugen and Vøllestad 2001, Conover and Munch 2002, Olsen et al. 2004, Walsh et al. 2006, Edeline et al. 2007, Biro and Post 2008, van Wijk et al. 2013, Uusi-Heikkilä et al. 2015, Bouffet-Halle et al. 2019). Such a harvest-induced evolution is sometimes referred to as “maladaptive” (Walsh et al. 2006) because traits move away from the naturally-selected phenotypic optimum (Fig. 2A). However, evolution in response to selection is adaptive by definition, by tracking movements of the novel adaptive optimum that results from the combination of natural selection and harvest selection curves (Fig. 2A, Carlson et al. 2007; Dunlop et al. 2015). If adaptive change occurs fast enough, it may potentially restore a positive population growth and prevent extinction, a process termed “evolutionary rescue” (Glossary, Fig. 2A, Gomulkiewicz & Holt 1995a). Apparent “maladaptation” is, in fact, linked to the lower fitness of the adaptive peak on the composite adaptive landscape (grey curve in Fig. 2A) compared to the fitness of the pristine adaptive peak (blue dotted curve in Fig. 2A). Would the naturally-selected adaptive landscape be flat (horizontal blue dotted line in Fig. 2A), the fitness of the the adaptive peak on the composite adaptive landscape would

be identical to the fitness of the pristine adaptive peak and there would be no maladaptation in harvest-adapted populations. Hence, the widely-reported maladaptation in harvested populations demonstrates that naturally-selected adaptative landscapes are not flat but instead steep, and that the effects of natural selection on trait and population dynamics should not be ignored in harvested systems.

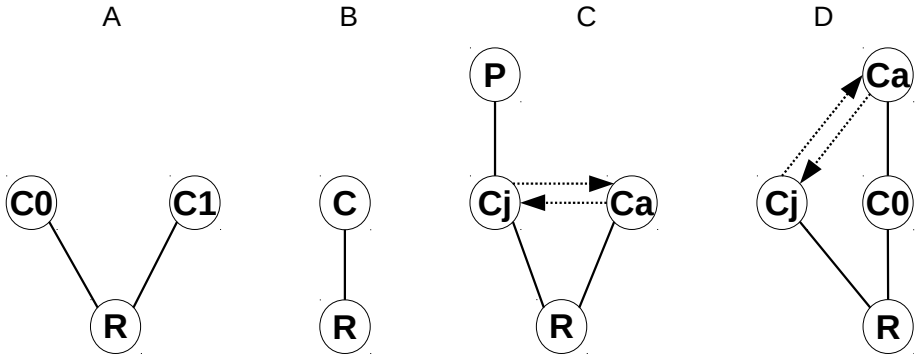

Figure 3. The four trophic modules considered for monospecific harvest-induced EEFLs in this paper. R = resources, C = consumers, P = predators. Solid lines connecting nodes represent trophic links (energy flowing from bottom to top), while dashed arrows represent juvenile maturation to the adult stage or reproduction. **A**: Resource competition between C0 and C1 may be exploitative (indirect) if mediated only by R, or direct if C0 and C1 interfere when consuming R. **B**: predator-prey module. **C**: Life-history tritrophic food chain of De Roos & Persson (2002) in which juvenile and adult consumers Cj and Ca compete for R while Cj are consumed by a predator. **D**: life-history intraguild predation considered by Abrams (2011a) in which juvenile consumers Cj compete for R with consumer C0, which is preyed upon by adult consumers Ca.

The effects of harvesting on the size-dependent fitness landscape predicted in Fig. 2A are based on an assumption of negligible changes in natural selection. In fact, however, harvest-induced changes in the environment, population density and body size of target species (Fig. 1) may trigger feedback loops in which the strength and/or direction of natural selection may potentially change (Dieckmann and

Ferrière 2004, Ferrière and Legendre 2013). We now examine potential pathways for natural selection to act on body size in such feedback loops.

2. Size-dependent natural selection

2.1. Intraspecific competition

Competition (Fig. 3A) may be exploitative (i.e., resource-mediated, or indirect) or interference-mediated (i.e., direct). Both types of competition are expected to generate selection on body size. Exploitative competition may be usefully construed using the R^* rule, which states that competition selects individuals surviving on the lowest equilibrium resource level (Tilman 1982). A lower individual R^* (i.e., a higher resource competitive ability) is achieved by increasing resource intake and/or by decreasing basal metabolic requirements. Note, however, that both resource intake and basal metabolic rate generally increase with body size (Peters 1983, Persson et al. 1998, De Roos et al. 2003b, Kooijman 2010). Hence, Whether individual R^* increases or decreases with body size depends on the relative strengths of allometric constraints acting on resource intake and metabolic rate. If resource intake increases faster with body size than metabolic rate, R^* decreases with increasing body size and exploitative competition should select larger body sizes. In contrast, if resource intake increases slower than metabolic rate, R^* increases with body size and exploitative competition should select smaller body sizes. In fish, available evidence suggests that R^* increases with body size (Persson and De Roos 2006), so that exploitative competition should favor smaller sizes. Population dynamics consistent with this prediction have been reported in the vendace *Coregonus albula* (Hamrin and Persson 1986), roach *Rutilus rutilus (Persson et al. 1998)* and Japanese medaka *Oryzias latipes* (Edeline et al. 2016).

While size-selective effects of exploitative competition are dependent upon the allometric scaling exponents of intake and maintenance rates, interference competition almost universally brings an advantage to large-sized individuals in contests for food (Persson 1985, Post et al. 1999a). In fish, this phenomenon is so prevalent that aquaculturists must apply size culling to fish cohorts to prevent a few giant individuals to monopolize food (even though food is provided in excess). In experimental populations of the springtail *Folsomia candida*, interference favours large-sized individuals that can monopolize resources (Le Bourlot et al. 2014). Similarly, in wild populations of the brown anole lizard (*Anolis sagrei*) natural selection for larger body sizes increases in parallel with population density and associated interference competition (Calsbeek and Smith 2007).

Competition, if not leading to competitive exclusion through a R^* process, may also select on body sizes indirectly through decreasing the individual resource share. Fitness-maximising models predict that food stress should select for delayed maturation and, hence, for larger adult body size if somatic growth rate is constant (Gadgil and Bossert 1970).In contrast, an evolutionarily-stable model predicts resource limitation to select for earlier maturation at a smaller body size if somatic growth rate is constant (Kawecki 1993).Available evidence tends to support predictions from fitness-maximising models (Holliday 1989, Sgrò and Partridge 2000).

2.2. Predation

If predators are either non size-selective or selective against a large body size in their prey, they will drive the same sort of trait dynamics as harvesters (see above). Often, however, predators are size-

limited and thus preferentially feed on small-sized individuals in their prey populations, which is uncommon among harvesters. This is for instance the case of intraspecific predation (cannibalism), in which large conspecifics prey on smaller conspecifics (Claessen et al. 2004). In such a case, predators favour prey individuals that grow fast through the "predation window" to rapidly reach a size refuge, i.e., they select for a large body size at a given age (Day et al. 2002). Cannibalism is presumably the mechanism that controlled the positive effect of population density on somatic growth rate in Windermere pike *Esox lucius*: as the density of cannibals increased, survival was biased towards fast-growing individuals (Edeline et al. 2007).

Table 1. Sources of natural selection predicted and observed to favour either a smaller or larger body size at age or at maturity.

Natural selection for a Smaller body size	Natural selection for a Larger body size
Size-dependent exploitative competition[1]	Interference competition
	Size-*in*dependent exploitative competition resulting in food stress
Selective predation on large-bodied individuals in prey populations	Selective predation on small-bodied individuals in prey populations[2]
Size-*in*dependent predation	Cannibalism
Selective predation on juvenile (immature) individuals in prey populations	Selective predation on mature individuals in prey populations

1: Selection may be for a large body size if attack rate increases faster with body size than maintenance rate. 2: direction of selection may be different on size-at-age and on size-at-maturity.

In contrast, the effect of size-limited predation on age at maturation is less straightforward. If mortality increases among young age classes, models predict evolution of delayed maturity (Law 1979). In contrast, if the mortality is stage-dependent, higher juvenile (immature) mortality favours earlier maturity which, given a fixed growth rate, also means maturity at a smaller body size (Abrams and

Rowe 1996, Heino et al. 2015). If mortality increases among small-sized individuals, predictions depend on the details of the model. Optimality models predict evolution of delayed maturation at a larger body size (Taylor and Gabriel 1992). In contrast, AD models accounting for a trade off between somatic growth and reproduction and for a positive effect of body size on fecundity lead to more complex outcomes: increased mortality among small-sized individuals can increase or decrease maturation size, or even lead to the coexistence of both early- and late-maturing individuals depending on the parameter values in the model (Gårdmark and Dieckmann 2006). To our knowledge, the available empirical and experimental evidence is for delayed maturation at a larger body size when predation targets small-sized individuals (Renneville et al. unpublished results, Edley and Law 1988, Wellborn 1994, Beckerman et al. 2010), but only if resources are enough to support fast somatic growth (Chase 1999). The results of this section 2 are summarized in Table 1.

3. Monospecific EEFLs

Before discussing more complex situations that involve the co-evolution of several species, we first study monospecific EEFLs in which only the harvested species evolves. This configuration may represent a reasonable approximation of the reality when the strength of selection or evolvability is highly asymmetric among interacting species. We start by examining monospecific EEFLs in simple trophic modules (resource competition, and consumer-resource, Figs. 3A and 3B) before moving to more sophisticated trophic modules blending competition and predation (Figs. 3C and 3D).

3.1. Competition-driven EEFLs

As highlighted above, exploitative (indirect) competition is predicted to select for smaller body sizes in fish. Consequently, it follows that the direct selective effects of harvesting (toward smaller sizes) may

be somewhat compensated by the relaxed selective pressures due to decreased exploitative competition (Fig. 2B compared to 2A). The natural selection feedback then tends to oppose the evolutionary effects of fishing (Fig. 1, arrow 1a), thus favouring an evolutionary stasis but also reducing the probability for evolutionary rescue (Fig. 2B), a case referred to as “evolutionary trapping” by Dieckmann and Ferrière (2004). Additionally, the overall flattening of the fitness landscape is expected to result in decreased effective population size (Ne, Fig. 1) and a loss of body-size evolvability (Eq. 2, box 1).

In contrast, when interference or even cannibalism dominate competition, natural selection initially favours large-sized individuals. Harvesting, by reducing the density of large-sized, dominant individuals thus relaxes natural selection for a large body size (Fig. 2C). Such a synergism between direct harvest selection and the natural selection feedback (Fig. 1, arrow 1a) will magnify evolution towards smaller body sizes and elevate the fitness peak on the composite fitness landscape (Fig. 2C compared to 2A), thus increasing effective population size and body size evolvability, inflating probability for evolutionary rescue, and ultimately favouring an evolutionary rebound after relaxation of fishing. This is presumably the configuration that explains why pike in Windermere showed a fast and large evolutionary response to varying harvesting intensity despite a relatively modest fishing pressure (Edeline et al. 2007). More generally, competition selection for a larger body size is expectedly prevalent in fish (Post et al. 1999b), which might possibly explain why rapid fishing-induced evolution towards smaller body size is so often reported.

Interestingly, observed rates of phenotypic change in response to exploitation in wild fish populations are about four times higher than the evolutionary rates reported in modelling studies (Audzijonyte et al. 2013a). This mismatch may result from models overestimating the effects of phenotypic plasticity and/

or underestimating response to selection. An overestimation of the effects of phenotypic plasticity seems unlikely, because the plastic effects associated with harvesting are well documented. Instead, theoretical models probably underestimate evolutionary changes, possibly because they do not account for the effects of natural selection. In particular, synergistic EEFLs such as described in Figs. 2C and 2D are good candidates to explain faster-than-predicted phenotypic response to fishing.

3.2. Predation-driven EEFLs

Harvest-induced EEFLs acting through predation have specifically been investigated by (Gårdmark et al. 2003) using a model corresponding to Fig. 3B (i.e., competition-absent dynamics), but where the resource species is a harvested, age-structured population in which age at maturity (but not somatic growth) evolves in response to both harvesting and predation mortality. In the model, harvesting was age- (and not size-) dependent and the predator population was unharvested and not structured. Analytical results show that, in the absence of any predation (i.e., with no EEFL from predator dynamics), harvesting immature individuals does *not* influence the evolution of age at maturity while, as described above, harvesting maturing or mature individuals favours evolution towards earlier maturation at a smaller body size. However, when predation on maturing or mature prey is added to the system, harvesting immature (but not maturing or mature) individuals favours evolution towards delayed maturity. This is because harvesting reduces prey availability for the predator, inducing relaxed predation and the associated natural selection for an earlier maturation. Hence, in this example the EEFL generates density-dependent selection on age at maturity when harvesting does not generate any selection.

The model of Gårdmark et al. (2003) illustrates how effects of harvesting and natural selective effects due to predation interact in complex ways. Often, however, exploitation targets large-sized, mature individuals in species that reach a size refuge from predation through ontogeny (Fig. 3C, in which Ca would be exploited). In such a case, harvesting adult prey relaxes competition, favours reproduction and increases the number of prey juveniles (De Roos et al. 2007). Such an effect has been experimentally demonstrated when adult (and also juvenile) exploitation rate is of intermediate intensity (Schröder et al. 2009). Hence, harvesting adult prey should favour increased densities in predators of juvenile prey, with an associated increased intensity of selection for fast growth to a size refuge (i.e., for a large body size). In this configuration, the natural selection feedback is antagonistic with direct harvest selection, a case similar to Fig. 2B with negative consequences on population persistence of the prey as described above.

We now turn to examining what could be the effect of exploiting not the prey, but the predator in the tri-trophic food chain of Fig. 3C. In the model, both somatic growth and reproduction of the size-structured prey are food-dependent. Therefore, reduced prey density due to predation relaxes resource competition and favours the production of both adult prey through maturation and of juvenile prey through reproduction (Schröder et al. 2009). Hence, the predator favours itself through a positive, indirect density dependent effect termed “emergent Allee effect” by De Roos et al. (2003b). Similar to the tri-trophic module of Fig. 3C, life-history intraguild predation (LHIGP), the trophic module in Fig. 3D examined by Abrams (2011a), is also highly prone to exhibiting emergent Allee effects due to positive density-dependent effects of adult consumers Ca on their juveniles Cj.

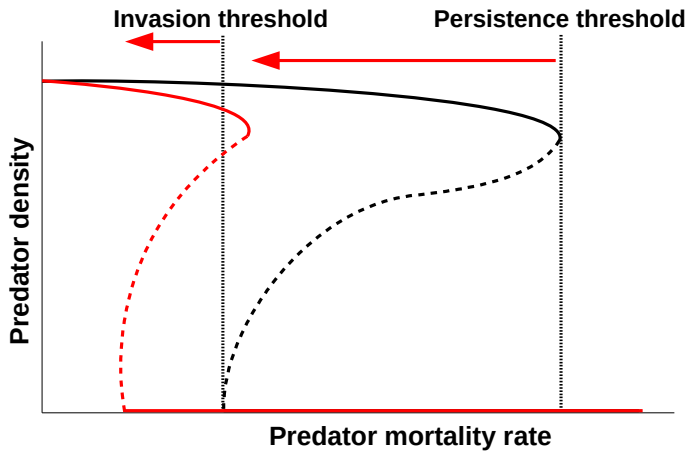

Fig. 4. Equilibrium predator densities as a function of predator mortality rate in the tri-trophic food chain model of De Roos and Persson (2002). Black: dynamics predicted by the ecological model. Red: Dynamics expected if a a size-dependent EEFL is added to the model. Solid lines = stable equilibrium, dashed lines: unstable equilibrium. Alternative stable equilibria with and without predators occur between the invasion and persistence threshold (vertical dotted lines). Arrows show the expected effect of the size-dependent EEFL on these thresholds.

In the absence of any evolutionary dynamics, the predator is always present when mortality is lower than the invasion threshold, and always absent when mortality is above the persistence threshold (Fig. 4). In between the two thresholds lies a bistability (hysteresis) region. Hence, recovering the predator after a collapse requires decreasing harvesting mortality down to the invasion mortality threshold, which is much lower than the persistence threshold. Therefore, the emergent Allee effect might explain a catastrophic collapse and lack of recovery that is observed in a number of fish stocks (Hutchings and Reynolds 2004). This behaviour of the model is robust to predators shifting to preference for large-sized prey (De Roos and Persson 2005), or to including stage (instead of size) structure and ontogenetic niche shifts in the predator (Van Leeuwen et al. 2008).

Currently, there is emerging concern about the role that trait evolution might play in mediating such abrupt shifts among alternative ecological states (Dakos et al. 2019). Hence, let us conceptually expand the model of De Roos and Persson (2002) to consider both a size structure in the predator and selective

harvesting of large-sized predators. The attack rate of a predator is positively linked to its body size (Peters 1983, Woodward et al. 2005, Kooijman 2010). Hence, harvest-induced selection towards smaller body sizes may reduce the ingestion capacity of predators (Shackell et al. 2010), weakening the predator-prey link, increasing resource competition in the prey, and ultimately lowering the production of juvenile prey (arrow 3 in Fig. 1). The resulting prey shortage for the predator and associated magnified size-dependent exploitative competition should induce natural selection for smaller predator body size (arrow 1a in Fig. 1), i.e., an EEFL in which natural selection acts in concert with harvest-induced selection and magnifies its effects (Figs. 2C and 2D).

Therefore, compared to the strictly-ecological model of De Roos and Persson (2002), we expect the added destabilizing EEFL to restrict the range of harvest intensities under which the predator may persist and make even more difficult its recovery. We thus expect evolution to change the stability pattern such that the invasion threshold dwindles and the persistence threshold decreases even more (red curve in Fig. 4). This scenario might be changed if interference and cannibalism dominate exploitative competition in the predator, such that increased competition selects for larger body sizes (see above). We also do not consider here body size evolution in the prey (but see below for co-evolutionary dynamics).

While we propose here a discussion of possible evolutionary dynamics, a complete theoretical investigation of such eco-evolutionary dynamics is beyond the aim of the present article. However, given the importance of competition among stages of a given structured population (module 3C) and the widespread occurrence of intraguild predation in fish systems (module 3D), such dynamics may be relevant to many harvested systems. Accordingly, regime shifts consistent with the tri-trophic food

chain model of De Roos and Persson (2002) and with the LHIGP model of Abrams (2011) have been documented in Lake Takvatn (Norway) for brown trout (*Salmo trutta*) and Arctic charr (*Salvelinus alpinus*), as described by Persson et al. (2007a), and in the North Sea for cod and herring (*Clupea harengus*), as described by Fauchald (2010). Similar negative associations between cod recruitment and the abundances of their prey have also been found in the Southern Gulf of St Lawrence (Swain and Sinclair 2000) and the Baltic Sea (Casini et al. 2009). Additionally, consistent with our hypothesis of a synergistic EEFL in the trophic modules of Figs. 3C and 3D, the collapse of the Southern Gulf of St Lawrence cod and rapid evolution towards smaller body sizes were associated with an increase in adult natural mortality, which has now replaced fishing mortality as the agent of selection favouring early maturation at a small body size (Swain 2011). The underlying causes for this increase in natural mortality are unknown but, owing to high prey shortage as predicted by the tri-trophic module of Fig. 3C (De Roos and Persson 2002), might possibly involve lower availability of food resources and increased competition-mediated selection for smaller body sizes. Because of the difficulties in predicting and managing such situations, we feel it is urgent to better investigate how evolutionary processes may alter the dynamics of these particular trophic modules.

4. Multispecies EEFLs

As shown in the previous section, EEFLs in a monospecific context can lead to various responses of body size depending on the dominant interaction type (competition, predation, cannibalism) or the network structure (Fig. 3) that is considered. However, fisheries most often target not just one species, but many species of the ecological network, so that an ecosystem perspective on fishery management is certainly required (White et al. 2012). In this context, understanding the evolutionary response to

harvesting of not just one, but multiple species, is an important challenge (Audzijonyte et al. 2013b). The simultaneous evolutionary responses of different species within a given community will lead to multispecies EEFLs, whose effects we want to discuss here. This multispecies EEFLs investigation requires to account simultaneously for the coevolution of the various body sizes (evolutionary part of the EEFL), of the network structure (the ecological context), and how one feeds back on the other (Loeuille and Loreau 2005).

Direct data investigating the occurrence and magnitude of such multispecies EEFLs are scarce. Such empirical investigations would require not only population data of the different species and of their body size distributions, but also on the occurrence and strength of interspecific interactions, on at least ten to twenty generations of the largest species. Such data are generally not available. However, different empirical facts suggest that multispecies EEFLs may naturally emerge in ecological networks. To illustrate this point, we will focus on food webs, as a lot of data are available for this type of network. We argue that harvest-induced changes in relative body size of the different species of the network may alter both the occurrence and intensity of trophic links among species.

First, consider the occurrence of interactions within the food web. Empirical data clearly suggest that trophic interactions largely depend on body sizes, predators being generally larger than their prey (Brose et al. 2006) and this pattern certainly holds in aquatic systems, including fishes (Cohen et al. 2003). For instance, in Broadstone Stream (UK) Woodward and Hildrew (2002) showed that interaction occurrence and niche overlap among species was largely determined by body-size ratios. Therefore, the occurrence of trophic interactions hinges on differences in body sizes, so that

asymmetric evolution of body sizes among the different species may rewire the network in complex ways, following the new size hierarchy.

Second, this argument extends to the intensity of interactions. Renneville et al. (2016), for instance, experimentally showed that varying fish body size may have more effects on the strength of trophic cascades than adding an average-sized fish to a fish-absent system. In the Ythan Estuary, Emmerson and Raffaelli (2004) showed that the intensity of consumption of different predator fishes can be altered when predator-prey body-size ratios change. Therefore, if selection on body size happens in various ways among species of the network, the strength of trophic links may be altered, with important consequences for the fitness of the different species of the community.

Size-dependent changes in the occurrence or intensity of trophic links may propagate through the network and potentially lead to extinctions within the network, either due to strictly-ecological alternative stables states, as detailed in the « monospecific EEFLs » section, or due to decreased density in the evolving population (evolutionary deterioration or evolutionary suicide, see Glossary). For instance, loss of a population may lead to the decrease or extinction of its predators through bottom up effects. Similarly, the decline of a predator population through monospecific EEFLs may affect prey species coexistence by reducing the intensity of apparent competition (Holt et al. 1994).

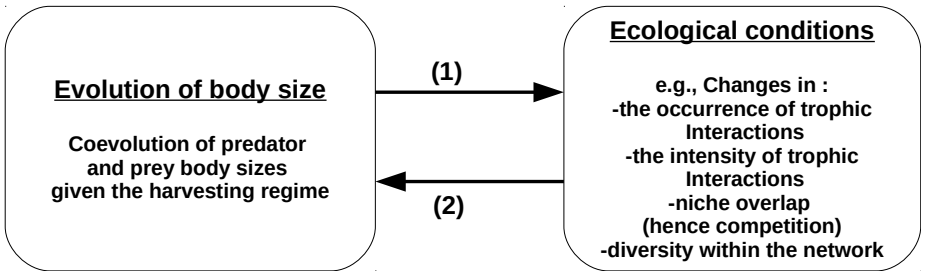

Fig. 5. Components of the multispecies EEFLs in the context of trophic webs. (1) Coevolution of body sizes within the network under the new selective regime (harvesting) may change presence or strength of edges (interactions) among species of the network, as well as presence of nodes (eg, species) coexisting in the network, hence the ecological context. (2) This new ecological context in turn changes the fitness of species (eg, due to changes in predation rates), therefore affecting the selective pressures acting on body size coevolution.

Therefore, body size evolution of the different species of the network potentially alters the whole ecological network, changing the occurrence of interactions, their intensity, and the network size. Because the network context, in turn, constrains the fitness of species of the community (predation and competition being altered), multispecies EEFLs naturally emerge (Fig. 5).

Discussing the implications of multispecies EEFLs requires to deal simultaneously with two levels of complexity : (1) the interaction of ecological and evolutionary dynamics (intrinsic to EEFLs, Figs. 1 and 5) ; (2) the dynamics of complex, multi-species networks. Therefore, we propose to discuss these feedbacks in two steps. First, we focus on a pair of harvested species within the network, isolating the body size coevolution of a predator-prey interaction. We there simplify the network aspect. We then propose possible tools of investigation of such EEFLs in more complex network settings.

Given a prey and a predator, the EEFL can be decomposed in two parallel pathways (selection- and evolvability-mediated), as proposed in Fig. 1 and Box 1. First, we consider a selection-mediated pathway to EEFLs (Fig. 1, arrow 1a) acting through changes in selection pressures due to harvesting (i.e., affecting the fitness gradients, see Box 1) when the predator and prey species have the same body-size evolvability (equal-length red arrows in Figs. 6A and 6B). In Figs. 6A and 6B, we show how the predator-prey coevolution outcome depends on whether the prey species is smaller or larger than the optimal prey body size for the predator, as set by the ratio *r*.

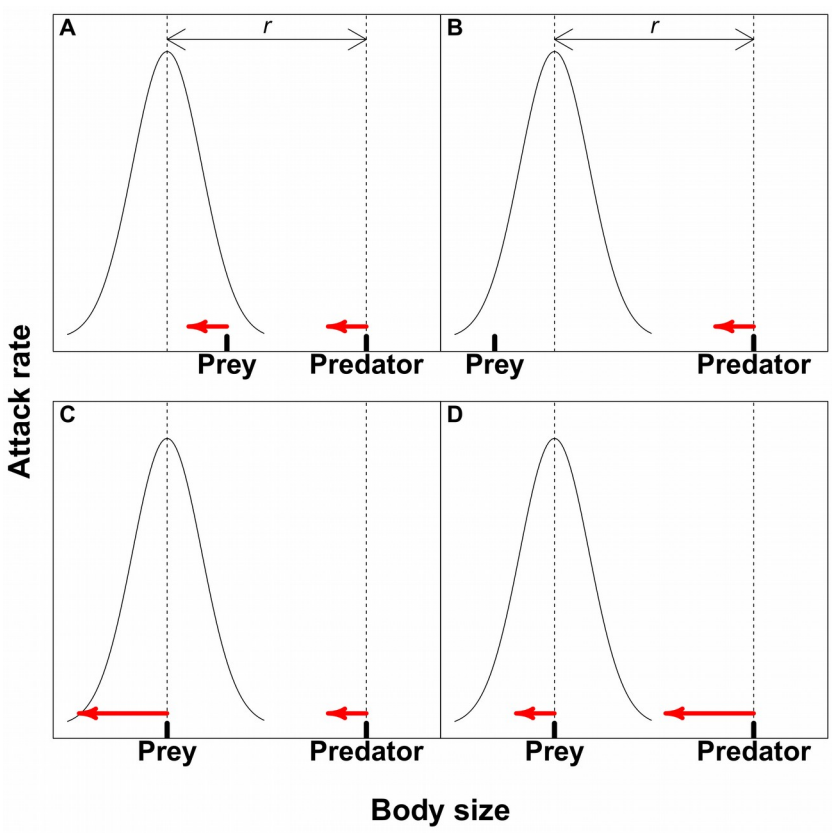

Fig. 6. Alternative outcomes of the selection- and evolvability-mediated pathways to eco-evolutionary feedback loops in coevolving predator and prey. The Gaussian curve shows the attack rate of the predator, which optimal prey size is set by the fixed ratio *r*. Red horizontal arrows show potential for body size evolution (i.e., body-size evolvability) in response to harvesting.

Note that in Figs 6A and 6B we do not assume for the initial situation that the prey is optimally consumed by the predator. Indeed, a gap between prey size and preferred size can occur both because the prey itself evolves, but also because predator body size may

be constrained by other components than the attack rate (e.g., metabolic losses, Brown et al. 2004), or because alternative prey species also act as selective pressures. Actually, in models of body size coevolution in networks, the distribution of body sizes do not usually maximize trophic interactions (e.g., Loeuille and Loreau 2005). Specifically, on panel 6A prey size is initially larger than the predator's optimal prey size, and the predator-prey coevolution will hamper the evolutionary response to harvesting. This is because, in the prey, harvest-induced evolution towards smaller body size is opposed by increased mortality from predation, while in the predator harvest-induced evolution towards smaller body size is opposed by decreasing predation efficiency.

In contrast, in panel 6B the predator-prey coevolutionary dynamics act in synergy with harvest-induced selection and accelerate harvest-induced evolution. Specifically, in the prey harvest-induced evolution towards smaller body size is favoured by decreased mortality from predation, while in the predator harvest-induced evolution towards smaller body size is eased by increasing predation efficiency. Because of the synergy with natural selection, harvest-induced evolution is expected to be faster in case 6B than in case 6A.

The analysis here assumes that the predator-prey body-size ratio (r in Fig. 6) is non evolving. This means that when the predator body size varies, its optimal prey body size also changes by an equal amount. This assumption is supported by the fact that predator-prey body-size ratios partly result from morphological allometric constraints (Renneville et al. 2016) that have low evolvability (Pélabon et al. 2014). However, we currently lack data indicating whether evolution of optimal prey body size is indeed more constrained than the evolution of body size itself. Relaxing this assumption would require to account not only for the coevolution between prey and predator body sizes, but also to add the

coevolution between predator's optimal prey size and prey body size. While simulations of such scenarios are certainly possible (Stegen et al. 2009, Allhoff et al. 2015), such an analysis clearly goes beyond the arguments we want to present here.

As a second step of our analysis, we now investigate evolvability-mediated pathways to EEFLs (Fig. 1, arrow 1b) in harvested predator-prey systems. In Figs. 6C and 6D, we now allow the initial body-size evolvability (in terms of response to the harvesting regime) in prey and predators (red arrows) to differ. Specifically, on panel 6C we allow the prey body size to evolve initially faster in response to harvesting than the predator body size. This scenario should lead to a slackening of the trophic link, resulting in reduced top-down effects of the predator on the prey. An increase in prey population is therefore expected, likely resulting in an increased evolvability and favoring an enhanced evolutionary response in the prey. For instance, in a mutation-limited framework (e.g., adaptive dynamics, Box 1), mutation rate acts per individual. More individuals allow for more mutations to happen on a given timescale, allowing for a faster evolution. In a quantitative genetic framework, evolution is fuelled by standing genetic variability (Box. 1). A higher population density often means more genetic variability (Frankham 1996, Leimu et al. 2006, Allendorf et al. 2008) such that, again, increased prey density increases body size evolvability in the prey.

The predator, on the other hand, evolves slower than the prey, so that its consumption rate may decrease, resulting in decreased population size and impaired body-size evolvability. In a nutshell, the situation in panel 6C suggests the possibility of a positive-feedbacked EEFL leading to a growing asymmetry in body-size evolvability, and resulting in large increases in the prey population, fast evolution of prey body size, and to the demise of the predator population. Harvesting the predator or

prey residing around such an unstable equilibrium would potentially trigger fast evolutionary dynamics and predator collapse.

Panel 6D shows the reverse situation in which body-size evolvability is here larger in the predator than in the prey, such that initially the prey can not escape being optimally preyed-upon by the predator. Harvest-induced evolution of predator or prey body size would lead to decreased predation efficiency, lower predator population sizes, and decreased body-size evolvability in the predator. The parallel increase in prey densities would result in higher body-size evolvability in the prey. Hence, in case of Fig. 6D harvest-induced evolution would trigger a negative-feedbacked EEFL that should slow the coevolutionary dynamics. Indeed, while the predator could in theory evolve fast given its potential, part of the variability will here have low fitness given the slow evolution of the prey.

Such evolvability-mediated pathways to EEFLs are often disregarded, but we want to emphasize that they may actually be very important from a management or a conservation point of view. For instance, population size and genetic variabilities have been suggested to be important components for the evolutionary rescue of species (Gomulkiewicz and Holt 1995, Carlson et al. 2014), and are expectedly also important for evolutionary trapping or suicide. Overexploited species show an average 12% loss in allelic richness and 2% loss in heterozygosity, demonstrating that overharvesting does erode genetic diversity (Pinsky and Palumbi 2014). It is thus important to incorporate evolvability-mediated pathways in our conceptualization of EEFLs to better understand their consequences.

The previous analysis is drawn from a pairwise interaction. Legitimate questions therefore arise : (1) whether such coevolutionary dynamics happen for a sufficient number of species to alter the whole

network ; (2) how we should handle this type of complexity. Concerning the first question, it seems intuitive that a multiplicity of trophic and nontrophic interactions may generate a multiplicity of counteracting selection gradients, such that evolution might be more constrained in more complex systems. If this hypothesis is true, then EEFLs might be more important in explaining evolutionary and ecological stasis rather than change (Strauss 2014, Kinnison et al. 2015).

On the other hand, we may certainly think of universal selective pressures that potentially drive directional body-size changes on whole-community scales. For instance, available data suggest that climate warming drives change toward smaller body sizes in whole aquatic communities (Daufresne et al. 2009, Edeline et al. 2013). Predators in natural streams of Trinidad drive repeatable evolution involving ecosystem feedbacks in guppies (Bassar et al. 2012, Travis et al. 2014). Similarly, size-selective harvesting is almost universally reported to drive smaller body sizes and earlier maturation in complex fish communities (see above). Hence, we feel that EEFLs leading to consistent directional change in body size, such as described above, are likely to exist even in complex communities.

Regarding the second question, both network and eco-evolutionary complexities under harvesting scenarios are likely to be quite hard to handle through a mathematical analysis. However, numerical simulations are certainly possible. In this regard, the development of evolutionary models of food webs based on body size (Loeuille and Loreau 2005, 2009, Brännström et al. 2011, Allhoff et al. 2015) offer promising venues, as they already consider simultaneously evolution of body size and changes in the network structure. Harvesting scenarios could be implemented in such models, as has been done in other contexts (eg, climate warming, Weinbach et al. 2017).

5. Management perspectives

To date, our most elaborated understanding of the effects of harvest-induced evolution on biodiversity relies on population models that often ignore density-dependent selection. Still, these models predict evolution to have important consequences for the dynamics of harvested populations under relatively common exploitation rates. In particular, eco-genetic models were developed to quantify the demographic effects of fishing-induced evolution while accounting for plastic density-dependence in somatic growth and reproduction (e.g., Dunlop et al. 2009, Kuparinen and Hutchings 2012, Ayllón et al. 2018). These models predict that harvest-induced evolution starts having large demographic effects when the exploitation rate rises above about 40-50 % (Dunlop et al. 2009, Eikeset et al. 2016), which is the case for about 20% of stocks in the RAM Legacy Stock Assessment Database for commercially-exploited marine fishes and invertebrates (Ricard et al. 2012). We expect EEFLs to decrease this threshold harvest rate and, hence, to increase the proportion of stocks in which harvest-induced evolution should be a management concern.

We recognize that more empirical and experimental studies are needed to document the pathways, directions and strength of density-dependent selection acting on body sizes in harvested systems. Importantly, our review suggests that the direction of evolution will largely depend on the ecological factor that regulates the population (table 1) and will likely be constrained by the network context. In nature, different limiting factors may co-occur or happen at different times, the network context will likely vary. However, based on our above analysis we may still propose some general management rules accounting for size-dependent EEFLs. As highlighted by Engen et al. (2014), a general consequence of density-dependent selection is that the more ecologically-sustainable strategies will also produce the less evolutionary changes. Therefore, preventing population declines and alleviating

evolutionary change are not independent lines of management but are instead highly intertwined management targets. For instance, if the feedbacks described in Fig. 2B-D are mediated by density-dependent selection in the exploited population (i.e., a 2b-1a arrow sequence in Fig. 1), lower exploitation rates will limit density variation and, hence, will dampen the amplitude of the EEFLs. In more complex, bi-stable systems (Figs. 3C and 3D), EEFLs acting through resource feedbacks would be dampened if harvesters would exploit in parallel both consumers and their resources. For instance, in the tri-trophic model of Fig. 3C, harvesting prey juveniles in parallel with the top predator would prevent the emergent Allee effect. Similarly, harvesting the IGP prey in parallel with adults of the IGP predator in Fig. 3D would prevent a resource feedback on the IGP predator.

Finally, in co-evolving predator-prey pairs, spreading the harvest pressure evenly among the predator and prey would favour similar changes in the prey and predator and minimize the probability for harvesting to trigger EEFLs, especially in selection-mediated EEFLs (Figs. 6A and 6B). If, however, EEFLs are rather evolvability-mediated (Figs. 6C and 6D), harvesting should be more intensive in the most evolvable species so as to decrease the consequences of asymmetry in evolvability. These recommendations converge towards “balanced harvesting”, a management approach based on spreading fishing mortality across the widest possible range of species and sizes in proportion to their natural productivity. Interestingly, such balanced strategies have already been advocated to conciliate yield and sustainability even in models that ignore evolution (Tromeur and Loeuille 2017). More research is needed to test whether and under which conditions these general recommendations hold true. However, we believe that far enough evidence is available showing the importance of natural selection for trait dynamics to, by default, integrate natural selection into research programs on harvested populations. We hope that this essay compiled enough literature and ideas to further convince

researchers that natural selection should better be considered as dynamic rather than static. EEFLs offer an integrative approach that, we believe, will advance our ability to understand and predict nature's response to global changes.

Acknowledgements: EE acknowledges financial support from the Norwegian Research Council (projects EvoSize RCN 251307/F20 and REEF RCN 255601/E40) and from Rennes Métropole (project AIS 18C0356).

REFERENCES

Abrams 2001. Modelling the adaptive dynamics of traits involved in inter- and intraspecific interactions: an assessment of three methods. - Ecol. Lett. 4: 166–175.

Abrams, P. A. 2011. Simple life-history omnivory: responses to enrichment and harvesting in systems with intraguild predation. - Am. Nat. 178: 305–319.

Abrams, P. A. and Rowe, L. 1996. The effects of predation on the age and size of maturity of prey. - Evolution 50: 1052–1061.

Allendorf, F. W. et al. 2008. Genetic effects of harvest on wild animal populations. - Trends Ecol. Evol. 23: 327–337.

Allhoff, K. T. et al. 2015. Evolutionary food web model based on body masses gives realistic networks with permanent species turnover. - Sci. Rep. 5: 10955.

Audzijonyte, A. et al. 2013a. How fast is fisheries-induced evolution? Quantitative analysis of modelling and empirical studies. - Evol. Appl. 6: 585–595.

Audzijonyte, A. et al. 2013b. Ecological consequences of body size decline in harvested fish species: positive feedback loops in trophic interactions amplify human impact. - Biol. Lett. 9: 20121103.

Ayllón, D. et al. 2018. Eco-evolutionary responses to recreational fishing under different harvest regulations. - Ecol. Evol. 8: 9600–9613.

Bassar, R. D. et al. 2012. Direct and indirect ecosystem effects of evolutionary adaptation in the Trinidadian guppy (*Poecilia reticulata*). - Am. Nat. 180: 167–185.

Beckerman, A. P. et al. 2010. The reaction norm of size and age at maturity under multiple predator risk. - J. Anim. Ecol. 79: 1069–1076.

Biro, P. A. and Post, J. R. 2008. Rapid depletion of genotypes with fast growth and bold personality traits from harvested fish populations. - Proc. Natl. Acad. Sci. U. S. A. 105: 2919–2922.

Bouffet-Halle, A. et al. 2019. Density-dependent selection mediates harvest-induced evolution. - bioRxiv: 561522.

Brännström, Å. et al. 2011. Emergence and maintenance of biodiversity in an evolutionary food-web model. - Theor. Ecol. 4: 467–478.

Brose, U. et al. 2006. Consumer-resource body-size relationships in natural food webs. - Ecology 87: 2411–2417.

Brown, J. H. et al. 2004. Toward a metabolic theory of ecology. - Ecology 85: 1771–1789.

Calsbeek, R. and Smith, T. B. 2007. Probing the adaptive landscape using experimental islands: density-dependent natural selection on lizard body size. - Evolution 61: 1052–1061.

Carlson, S. M. et al. 2007. Four decades of opposing natural and human-induced artificial selection acting on Windermere pike (*Esox lucius*). - Ecol. Lett. 10: 512–521.

Carlson, S. M. et al. 2014. Evolutionary rescue in a changing world. - Trends Ecol. Evol. 29: 521–530.

Casini, M. et al. 2009. Trophic cascades promote threshold-like shifts in pelagic marine ecosystems. - Proc. Natl. Acad. Sci. U. S. A. 106: 197–202.

Chase, J. M. 1999. To grow or to reproduce? The role of life-history plasticity in food web dynamics. - Am. Nat. 154: 571–586.

Claessen, D. et al. 2004. Population dynamic theory of size-dependent cannibalism. - Proc. R. Soc. Lond. B Biol. Sci. 271: 333.

Cohen, J. E. et al. 2003. Ecological community description using the food web, species abundance, and body size. - Proc. Natl. Acad. Sci. U. S. A. 100: 1781–1786.

Conover, D. O. and Munch, S. B. 2002. Sustaining fisheries yields over evolutionary time scales. - Science 297: 94–96.

Crow, JamesF. 2008. Maintaining evolvability. - J. Genet. 87: 349–353.

Dakos, V. et al. 2019. Ecosystem tipping points in an evolving world. - Nat. Ecol. Evol. 3: 355–362.

Darimont, C. T. et al. 2009. Human predators outpace other agents of trait change in the wild. - Proc. Natl. Acad. Sci. U. S. A. 106: 952–954.

Daufresne, M. et al. 2009. Global warming benefits the small in aquatic ecosystems. - Proc. Natl. Acad. Sci. U. S. A. 106: 12788–12793.

Day, T. et al. 2002. The role of size-specific predation in the evolution and diversification of prey life histories. - Evolution 56: 877–887.

De Roos, A. M. and Persson, L. 2002. Size-dependent life-history traits promote catastrophic collapses of top predators. - Proc. Natl. Acad. Sci. U. S. A. 99: 12907–12912.

De Roos, A. M. and Persson, L. 2005. The influence of individual growth and development on the structure of ecological communities. - In: de Ruiter, P. C. et al. (eds), Dynamic food webs: multispecies assemblages, ecosystem development, and environmental change. 1st ed.n. Academic Press, pp. 89–100.

De Roos, A. M. et al. 2003a. Emergent allee effects in top predators feeding on structured prey populations. - Proc. R. Soc. Lond. B Biol. Sci. 270: 611–618.

De Roos, A. M. et al. 2003b. The influence of size-dependent life-history traits on the structure and dynamics of populations and communities. - Ecol. Lett. 6: 473–487.

De Roos, A. M. et al. 2007. Food dependent growth leads to overcompensation in stage specific biomass when mortality increases: the influence of maturation versus reproduction regulation. - Am. Nat. 170: E59–E76.

Devine, J. A. and Heino, M. 2011. Investigating the drivers of maturation dynamics in Barents Sea haddock (*Melanogrammus aeglefinus*). - Fish. Res. 110: 441–449.

Diaz Pauli, B. et al. 2017. Effects of ambient oxygen and size-selective mortality on growth and maturation in guppies. - Conserv. Physiol. 5: cox010–cox010.

Dieckmann, U. and Law, R. 1996. The dynamical theory of coevolution: a derivation from stochastic ecological processes. - J. Math. Biol. 34: 579–612.

Dieckmann, U. and Ferrière, R. 2004. Adaptive dynamics and evolving biodiversity. - In: Ferrière, R. et al. (eds), Evolutionary conservation biology. 1st ed.n. Cambridge University Press, pp. 188–224.

Dunlop, E. S. et al. 2009. Eco-genetic modeling of contemporary life-history evolution. - Ecol. Appl. 19: 1815–1834.

Dunlop, E. S. et al. 2015. From genes to populations: how fisheries-induced evolution alters stock productivity. - Ecol. Appl. 25: 1860–1868.

Edeline, E. et al. 2007. Trait changes in a harvested population are driven by a dynamic tug-of-war between natural and harvest selection. - Proc. Natl. Acad. Sci. U. S. A. 104: 15799–15804.

Edeline, E. et al. 2013. Ecological emergence of thermal clines in body size. - Glob. Change Biol. 19: 3062–3068.

Edeline, E. et al. 2016. Empirical evidence for competition-driven semelparity in wild medaka. - Popul. Ecol. 58: 371–383.

Edley, M. T. and Law, R. 1988. Evolution of life histories and yields in experimental populations of *Daphnia magna*. - Biol. J. Linn. Soc. 34: 309–326.

Eikeset, A. M. et al. 2016. Roles of density-dependent growth and life history evolution in accounting for fisheries-induced trait changes. - Proc. Natl. Acad. Sci. U. S. A. 113: 15030–15035.

Emmerson, M. C. and Raffaelli, D. 2004. Predator-prey body size, interaction strength and the stability of a real food web. - J. Anim. Ecol. 73: 399–409.

Engen, S. et al. 2014. Evolutionary consequences of nonselective harvesting in density-dependent populations. - Am. Nat. 184: 714–726.

Ernande, B. et al. 2004. Adaptive changes in harvested populations: plasticity and evolution of age and size at maturation. - Proc. Biol. Sci. 271: 415–423.

Fauchald, P. 2010. Predator-prey reversal: a possible mechanism for ecosystem hysteresis in the North Sea? - Ecology 91: 2191–2197.

Fenberg, P. B. and Roy, K. 2008. Ecological and evolutionary consequences of size-selective harvesting: how much do we know? - Mol. Ecol. 17: 209–220.

Ferrière, R. and Legendre, S. 2013. Eco-evolutionary feedbacks, adaptive dynamics and evolutionary rescue theory. - Philos. Trans. R. Soc. Lond. B Biol. Sci. 368: 20120081.

Frankham, R. 1996. Relationship of genetic variation to population size in wildlife. - Conserv. Biol. 10: 1500–1508.

Fussmann, G. F. et al. 2007. Eco-evolutionary dynamics of communities and ecosystems. - Funct. Ecol. 21: 465–477.

Gadgil, M. and Bossert, W. H. 1970. Life historical consequences of natural selection. - Am. Nat. 104: 1–24.

Gårdmark, A. and Dieckmann, U. 2006. Disparate maturation adaptations to size-dependent mortality. - Proc. R. Soc. Lond. B Biol. Sci. 273: 2185–2192.

Gårdmark, A. et al. 2003. Life-history evolution in harvested populations: the role of natural predation. - Evol. Ecol. Res. 5: 239–257.

Gomulkiewicz, R. and Holt, R. D. 1995. When does evolution by natural selection prevent extinction? - Evolution 49: 201–207.

Govaert, L. et al. 2019. Eco-evolutionary feedbacks—Theoretical models and perspectives. - Funct. Ecol. 33: 13–30.

Grant, P. R. and Grant, B. R. 2002. Unpredictable evolution in a 30-year study of Darwin’s finches. - Science 296: 707–711.

Hairston, N. G. et al. 2005. Rapid evolution and the convergence of ecological and evolutionary time. - Ecol. Lett. 8: 1114–1127.

Hamrin, S. F. and Persson, L. 1986. Asymmetrical competition between age classes as a factor causing population oscillations in an obligate planktivorous fish species. - Oikos 47: 223–232.

Haugen, T. O. and Vøllestad, L. A. 2001. A century of life-history evolution in grayling. - Genetica 112–113: 475–491.

Heino, M. et al. 2015. Fisheries-induced evolution. - Annu. Rev. Ecol. Evol. Syst. 46: 461–480.

Hilborn, R. and Walters, C. 1992. Quantitative fisheries stock assessment: choice, dynamics and uncertainty. - Springer US.

Hilborn, R. and Minte-Vera, C. V. 2008. Fisheries-induced changes in growth rates in marine fisheries: are they significant? - Bull. Mar. Sci. 83: 95–105.

Hiltunen, T. and Becks, L. 2014. Consumer co-evolution as an important component of the eco-evolutionary feedback. - Nat. Commun. 5: 5226.

Hiltunen, T. et al. 2014. A newly discovered role of evolution in previously published consumer–resource dynamics. - Ecol. Lett. 17: 915–923.

Holliday, R. 1989. Food, reproduction and longevity: is the extended lifespan of calorie-restricted animals an evolutionary adaptation? - BioEssays News Rev. Mol. Cell. Dev. Biol. 10: 125–127.

Holt, R. D. et al. 1994. Simple rules for interspecific dominance in systems with exploitative and apparent competition. - Am. Nat. 144: 741–771.

Hutchings, J. A. and Reynolds, J. D. 2004. Marine fish population collapses: consequences for recovery and extinction risk. - BioScience 54: 297–309.

Kawecki, T. J. 1993. Age and size at maturity in a patchy environment: fitness maximization versus evolutionary stability. - Oikos 66: 309–317.

Kinnison, M. T. et al. 2015. Cryptic eco-evolutionary dynamics. - Ann. N. Y. Acad. Sci. 1360: 120–144.

Kooijman, S. A. L. M. 2010. Dynamic energy budget theory for metabolic organisation. - Cambridge University Press.

Kuparinen, A. and Merilä, J. 2007. Detecting and managing fisheries-induced evolution. - Trends Ecol. Evol. 22: 652–659.

Kuparinen, A. and Hutchings, J. A. 2012. Consequences of fisheries-induced evolution for population productivity and recovery potential. - Proc. R. Soc. B Biol. Sci. 279: 2571–2579.

Kuparinen, A. et al. 2009. Estimating fisheries-induced selection: traditional gear selectivity research meets fisheries-induced evolution. - Evol. Appl. 2: 234–243.

Lande, R. and Arnold, S. J. 1983. The measurement of selection on correlated characters. - Evolution 37: 1210–1226.

Law, R. 1979. Optimal life histories under age-specific predation. - Am. Nat. 114: 399–417.

Law, R. 2000. Fishing, selection, and phenotypic evolution. - ICES J. Mar. Sci. J. Cons. 57: 659–668.

Le Bourlot, V. et al. 2014. Interference versus exploitative competition in the regulation of size-structured populations (Mathew A. Leibold and Judith L. Bronstein, Eds.). - Am. Nat. 184: 609–623.

Le Rouzic, A. et al. unpublished results. Unidirectional response to bidirectional selection on body size. II Quantitative genetics. - bioRxiv: 2020.01.23.916361.

Leimu, R. et al. 2006. How general are positive relationships between plant population size, fitness and genetic variation? - J. Ecol. 94: 942–952.

Loeuille, N. and Loreau, M. 2005. Evolutionary emergence of size-structured food webs. - Proc. Natl. Acad. Sci. U. S. A. 102: 5761–5766.

Loeuille, N. and Loreau, M. 2009. Emergence of complex food web structure in community evolution models. - In: Verhoef, H. A. and Morin, P. J. (eds), Community ecology: processes, models, and applications. 1st ed.n. Oxford University Press, pp. 163–178.

Marty, L. et al. 2014. Temporal trends in age and size at maturation of four North Sea gadid species: cod, haddock, whiting and Norway pout. - Mar. Ecol. Prog. Ser. in press.

Marty, L. et al. 2015. Fisheries-induced neutral and adaptive evolution in exploited fish populations and consequences for their adaptive potential. - Evol. Appl. 8: 47–63.

Olsen, E. M. and Moland, E. 2011. Fitness landscape of Atlantic cod shaped by harvest selection and natural selection. - Evol. Ecol. 25: 695–710.

Olsen, E. M. et al. 2004. Maturation trends indicative of rapid evolution preceded the collapse of northern cod. - Nature 428: 932–935.

Palkovacs, E. P. et al. 2018. Ecology of harvest-driven trait changes and implications for ecosystem management. - Front. Ecol. Environ. 16: 20–28.

Pauly, D. et al. 1998. Fishing down marine food webs. - Science 279: 860–863.

Pélabon, C. et al. 2014. Evolution of morphological allometry. - Ann. N. Y. Acad. Sci. 1320: 58–75.

Perez, K. O. and Munch, S. B. 2010. Extreme selection on size in the early lives of fish. - Evolution 64: 2450–2457.

Persson, L. 1985. Asymmetrical competition: are larger animals competitively superior? - Am. Nat. 126: 261–266.

Persson, L. and De Roos, A. M. 2006. Food-dependent individual growth and population dynamics in fishes. - J. Fish Biol. 69: 1–20.

Persson, L. et al. 1998. Ontogenetic scaling of foraging rates and the dynamics of a size-structured consumer-resource model. - Theor. Popul. Biol. 54: 270–293.

Persson, L. et al. 2007. Culling prey promotes predator recovery -- Alternative states in a whole-lake experiment. - Science 316: 1743–1746.

Peters, R. H. 1983. The ecological implications of body size. - Cambridge University Press.

Pinsky, M. L. and Palumbi, S. R. 2014. Meta-analysis reveals lower genetic diversity in overfished populations. - Mol. Ecol. 23: 29–39.

Post, J. R. et al. 1999a. Density-dependent processes in structured fish populations: interaction strengths in whole-lake experiments. - Ecol. Monogr. 69: 155–175.

Post, J. R. et al. 1999b. Density-dependent processes in structured fish populations: interaction strengths in whole-lake experiments. - Ecol. Monogr. 69: 155–175.

Renneville, C. et al. unpublished results. Unidirectional response to bidirectional selection on body size. I. Phenotypic, life history and endocrine response. - bioRxiv: 498683.

Renneville, C. et al. 2016. Morphological drivers of trophic cascades. - Oikos 125: 1193–1202.

Ricard, D. et al. 2012. Examining the knowledge base and status of commercially exploited marine species with the RAM Legacy Stock Assessment Database. - Fish Fish. 13: 380–398.

Roff, D. A. 1992. The evolution of life histories. - Chapman & Hall.

Schaefer, M. B. 1954. Some aspects of the dynamics of populations important to the management of commercial marine fisheries. - Inter-Am. Trop. Tuna Comm. Bull. 1: 23–56.

Schröder, A. et al. 2009. Culling experiments demonstrate size-class specific biomass increases with mortality. - Proc. Natl. Acad. Sci. U. S. A. 106: 2671–2676.

Sgrò, C. M. and Partridge, L. 2000. Evolutionary responses of the life history of wild caught *Drosophila melanogaster* to two standard methods of laboratory culture. - Am. Nat. 156: 341–353.

Shackell, N. L. et al. 2010. Decline in top predator body size and changing climate alter trophic structure in an oceanic ecosystem. - Proc. R. Soc. Lond. B Biol. Sci. 277: 1353–1360.

Silva, A. et al. 2013. Long-term changes in maturation of sardine, *Sardina pilchardus*, in Portuguese waters. - Sci. Mar. 77: 429–438.

Stegen, J. C. et al. 2009. Advancing the metabolic theory of biodiversity. - Ecol. Lett. 12: 1001–1015.

Stockwell, C. A. et al. 2003. Contemporary evolution meets conservation biology. - Trends Ecol. Evol. 18: 94–101.

Strauss, S. Y. 2014. Ecological and evolutionary responses in complex communities: implications for invasions and eco-evolutionary feedbacks. - Oikos 123: 257–266.

Swain, D. P. 2011. Life-history evolution and elevated natural mortality in a population of Atlantic cod (*Gadus morhua*). - Evol. Appl. 4: 18–29.

Swain, D. P. and Sinclair, A. F. 2000. Pelagic fishes and the cod recruitment dilemma in the Northwest Atlantic. - Can. J. Fish. Aquat. Sci. 57: 1321–1325.

Taylor, B. E. and Gabriel, W. 1992. To grow or not to grow: optimal resource allocation for *Daphnia*. - Am. Nat. 139: 248–266.

Tilman, D. 1982. Resource competition and community structure. - Princeton University Press.

Travis, J. et al. 2014. Do eco-evo feedbacks help us understand nature? Answers from studies of the Trinidadian guppy. - In: Moya-Laraño, J. et al. (eds), Advances in Ecological Research. Academic Press, pp. 1–40.

Trippel, E. A. 1995. Age at maturity as a stress indicator in fisheries. - BioScience 45: 759–771.

Tromeur, E. and Loeuille, N. 2017. Balancing yield with resilience and conservation objectives in harvested predator–prey communities. - Oikos 126: 1780–1789.

Uusi-Heikkilä, S. et al. 2015. The evolutionary legacy of size-selective harvesting extends from genes to populations. - Evol. Appl. 8: 597–620.

Van Leeuwen, A. et al. 2008. How cod shapes its world. - J. Sea Res. 60: 89–104.

van Wijk, S. J. et al. 2013. Experimental harvesting of fish populations drives genetically based shifts in body size and maturation. - Front. Ecol. Environ. 11: 181–187.

Walsh, M. R. et al. 2006. Maladaptive changes in multiple traits caused by fishing: impediments to population recovery. - Ecol. Lett. 9: 142–148.

Weinbach, A. et al. 2017. Selective effects of temperature on body mass depend on trophic interactions and network position. - bioRxiv: 233742.

Wellborn, G. A. 1994. Size-biased predation and prey life histories: a comparative study of freshwater amphipod populations. - Ecology 75: 2104–2117.

White, C. et al. 2012. The value of coordinated management of interacting ecosystem services. - Ecol. Lett. 15: 509–519.

Woodward, G. and Hildrew, A. G. 2002. Body-size determinants of niche overlap and intraguild predation within a complex food web. - J. Anim. Ecol. 71: 1063–1074.

Woodward, G. et al. 2005. Body size in ecological networks. - Trends Ecol. Evol. 20: 402–409.

Yoshida, T. et al. 2003. Rapid evolution drives ecological dynamics in a predator-prey system. - Nature 424: 303–306.