Germline *ERBB3* mutation in familial non-small cell lung carcinoma: expanding the role of the ErbB family in oncogenesis.

Authors: Aideen M. McInerney-Leo[1], Hui Yi Chew[1], Po-Ling Inglis[2], Paul J. Leo[3], Shannon R. Joseph[1], Caroline L. Cooper[4, 5], Satomi Okano[1], Tim Hassall[6], Lisa Anderson[2], Rayleen V. Bowman[5,7], Michael Gattas[8], Jessica E. Harris[3], Mhairi S. Marshall[3], Janet G. Shaw[5,7], Lawrie Wheeler[3], Ian A. Yang[5,7], Matthew A. Brown[3,9], Kwun M. Fong[5,7*], Fiona Simpson[1*], Emma L. Duncan[3,5,10,11*].

[*]Joint senior authors

[1]The University of Queensland Diamantina Institute, The University of Queensland, 37 Kent St, Woolloongabba, QLD, 4102.

[2]Medical Oncology, Royal Brisbane and Women's Hospital, Herston, QLD, 4029.

[3]Translational Genomics Group, Institute of Health and Biomedical Innovation, School of Biomedical Sciences, Queensland University of Technology (QUT), Translational Research Institute, 37 Kent St, Woolloongabba, QLD, 4102.

[4]Department of Anatomical Pathology, Pathology Queensland, Princess Alexandra Hospital, Brisbane

[5]UQTRC, Faculty of Medicine, The University of Queensland, 288 Herston Road, Herston, QLD, 4006.

[6]Queensland Children's Hospital, South Brisbane, QLD, 4101.

[7]Department of Thoracic Medicine, The Prince Charles Hospital, Rode Road, Chermside, QLD, 4032.

[8]Genetic Health Queensland, Royal Brisbane and Women's Hospital, Herston, QLD, 4029.

[9]Guy's and St Thomas' NHS Foundation Trust and King's College London NIHR Biomedical Research Centre

[10]Department of Endocrinology, Royal Brisbane and Women's Hospital, Butterfield St, Herston, QLD, 4029

[11]Department of Twin Research & Genetic Epidemiology, School of Life Course Sciences, Faculty of Life Sciences and Medicine, King's College London.

Running title: Germline *ERBB3* mutation in autosomal dominant NSCLC

Keywords: *ERBB3*, germline mutation, autosomal dominant, lung cancer, signalling pathway activation.

Financial Support: This work was supported by Cancer Council Queensland (#1041390), the Queensland Head and Neck Cancer Centre, the Princess Alexandra Research Foundation (#2016030) to FS and Princess Alexandra Research Foundation to SRJ. AML is supported by an NHMRC ECF (#1158111)

Corresponding author:

Professor Emma L. Duncan

Department of Twin Research & Genetic Epidemiology, School of Life Course Sciences, Faculty of Life Sciences and Medicine, King's College London.

Tel: +44 20 7848 8110

Fax:

Email: Emma.duncan@kcl.ac.uk

Disclaimers: The authors declare no competing financial interests.

Word Count: 1564 (excluding abstract, acknowledgements, authorship contribution and figure legends)

Number of Figures and Tables: Four figures and one table.

ABSTRACT

Introduction

Lung cancer is the commonest cause of cancer deaths worldwide. Although strongly associated with smoking, predisposition to lung cancer is also heritable with multiple common risk variants identified. Rarely, dominantly-inherited non-small-cell lung cancer (NSCLC) has been reported, due to mutations in EGFR/ErbB1 and ERBB2.

Methods

Germline exome sequencing was performed in a multi-generation family with autosomal dominant NSCLC. Tumour samples were also sequenced. Full-length wild-type (wtErbB3) and mutant ERBB3 (mutErbB3) constructs were transfected into HeLa cells. Protein expression, stability, and sub-cellular localisation were assessed; and cellular proliferation, pAkt/Akt, and pERK levels were determined.

Results:

A novel germline variant in *ERBB3* (c.1946T>G: p.Iso649Arg), coding for receptor tyrosine-protein kinase erbB-3 (ErbB3), was identified, with appropriate segregation. There was no evidence of loss-of-heterozygosity in tumour samples.

Both wtErbB3 and mutErbB3 were stably expressed. MutErbB3-transfected cells demonstrated an increased ratio of the 80kD form [which enhances proliferation] compared to the full-length [180kD] form. MutErbB3 and wtErbB3 had similar punctate cytoplasmic localisation pre- and post-EGF stimulation; however, post-stimulation EGFR levels decreased faster in mutErbB3-transfected cells, suggesting more rapid processing of the mutErbB3/EGFR heterodimer. Cellular proliferation was increased in mutErbB3-transfected cells compared to wtErbB3-transfected cells. MutErbB3-transfected cells also showed decreased pAkt/tAkt ratios and increased pERK/tERK 30 minutes post-stimulation compared

to wtErbB3, demonstrating altered signalling pathway activation by mutErbB3. Cumulatively, these results support this mutation as tumorogenic.

Conclusion

This is the first reported family with a germline *ERBB3* mutation causing heritable NSCLC, furthering understanding of the ErbB family pathway in oncogenesis.

INTRODUCTION

Lung cancer is the leading cause of cancer deaths worldwide (World Health Organisation). Although over 80% of cases are attributable to smoking, lung cancer susceptibility is also heritable, with multiple susceptibility loci identified.[1]

Somatic gain-of-function mutations affecting the tyrosine kinase (TK) domain of *Epidermal Growth Factor Receptor (EGFR)* are common in non-small cell lung cancer [NSCLC], particularly adenocarcinoma, and predict responsiveness to EGFR-targeting tyrosine kinase inhibitors (TKIs).[2] Extremely rarely, germline carriage of *EGFR* mutations has been described in families with autosomal dominant NSCLC, occasionally with additional somatic *EGFR* mutations.[3] EGFR (ErbB1, Human EGF Receptor [HER] 1) belongs to the ErbB family of receptor tyrosine kinases which includes ErbB2 (neu, HER2), ErbB3 (HER3) and ErbB4 (HER4). Additionally, a germline *ERBB2* mutation was identified in another family with autosomal dominant NSCLC, without additional *HER2* somatic variant(s).[4]

Here, we identify a new causative gene for autosomal dominant NSCLC.

MATERIALS AND METHODS

This study was conducted under ethical approval from the Prince Charles Hospital HREC/13/QPCH/216. All individuals gave informed written consent.

Detailed methods are presented in Supplementary Data. Briefly, exome sequencing was performed on germline DNA in a multi-generational family with autosomal dominant NSCLC (Fig.1). Given the rarity of autosomal dominant NSCLC, only previously unreported variants were considered, where variant minor allele frequency was assessed against internal and external databases (e.g. gnomAD[5]). Formalin-fixed paraffin-embedded samples (from individuals LGCA-1.2, LGCA-1.3 and LGCA-1.6) were obtained, and DNA extracted and

sequenced; and expression and localisation of ErbB3 in normal and tumour tissue was assessed using immunohistochemistry.

Full-length wild-type (wtErbB3) and mutant (mutErbB3, c.1946T>G: p.Iso649Arg) *ERBB3* expression constructs were produced and transfected into HeLa cells (which do not express endogenous ErbB3 or ErbB2, but do express EGFR (ErbB1), the preferred dimerisation partner of ErbB3[6]).

To evaluate protein size and conformation, Western blotting was performed on lysates from transfected HeLa cells (vector-only, wtErbB3, or mutErbB3), probed with commercial anti-bodies against ErbB3 with β-tubulin used as protein-loading control.

To assess localisation pre- and post-stimulation, transfected cells were either fixed (0') or stimulated with 10ng EGF-Alexa Fluor 488 (30') prior to fixation, and immunostained for ErbB3, endogenous EGFR and nuclei stained using DAPI.

Transfected cells (vector-only, wtErbB3 or mutErbB3, co-transfected with green fluorescence protein (GFP)) were separated by fluorescence-activated cell sorting and proliferation rate assessed.

Signalling pathway activation of ErbB3 and mutErbB3 transfected cells were analysed by immunoblotting for ErbB3, EGFR, Akt (phospho- and total) and ERK (phospho- and total) in cells grown in full serum (control), 3 hours post-serum starvation (0) and post-EGF stimulation (10ng/ml) at 10 minutes and 30 minutes. Relative protein expression was quantified and the ratio normalised to β-Tubulin (used as a loading control) to enable the quantification of phospho- to total-Akt (pAkt/tAkt) and phospho- to total-ERK (pERK/tERK)

RESULTS

Clinical details

The proband (LGCA-1.2), who smoked, presented with lung adenocarcinoma aged 51 years. Her father and paternal grandfather, both smokers, died of NSCLC aged 39 and 34 years, respectively. Two of her five children (both non-smokers) have lung adenocarcinoma, presenting aged 12 and 30 years (see Fig.1).

Exome sequencing

Germline exome sequencing identified four novel good-quality variants affecting highly conserved bases with appropriate familial segregation, with three predicted damaging by at least two protein prediction algorithms (Supplementary Data: Table 1). The *ERBB3* variant (NM_001982; c.1946T>G; p.Ile649Arg) was of particular interest given the known oncogenic role of ErbB3 itself,[7] and of other ErbB family members in heritable NSCLC (Table 1). In considering the other variants: *SORBS1* (*Sorbin And SH3 Domain Containing 1*) is involved in cell adhesion, growth factor signalling and cytoskeleton formation; and appears mainly to regulate insulin-mediated glucose uptake.[8] *ATG2B* (*Autophagy-Related Protein 2 Homolog B*) is involved in autophagy, a key pathway mediating stress-induced adaptation and cellular damage control. Although exploited by cancer cells to survive stressors (e.g., starvation, hypoxia and chemotherapy), autophagy is not considered an oncogenic driver process *per se*.[9]

Sanger sequencing of tumour DNA excluded homozygosity of the *ERBB3* variant. Unfortunately, tumour DNA quality was insufficient for further assessment of additional *ERBB3* somatic variants.

ErbB3 expression, folding, and cytoplasmic localisation

Both wtErbB3 and mutErbB3 were folded and expressed stably (Fig.2A) with similar sub-cellular localisation (Fig.2B). Cytoplasmic organelle distribution mirrored that of endogenous ErbB3 (in other, non-HeLa cells; data not shown).

Compared with wtErbB3, cells expressing mutErbB3 showed a higher ratio of the 80kDa to full-length,(~180kDa) forms.

Without EGF stimulation, EGFR co-localised with mutErbB3 in concentrated puncta in the endosomal system, which was less evident with wtErbB3 (Fig.2B). After EGF stimulation, both wtErbB3 and mutErbB3 increased in the perinuclear region (Fig.2B), also co-localising with EGFR at this time-point (Fig.2B, 30' time-point).

Cell proliferation

HeLa cells expressing mutErbB3 demonstrated increased cellular proliferation, when compared to either HeLa cells expressing wtErbB3 or vector-only (Fig.2C).

Signalling Pathway Activation

After EGF stimulation, expression levels of mutErbB3 and wtErbB3 were comparable at all time-points; though, EGFR levels decreased over time in cells expressing mutErbB3 compared with wtErbB3 (Fig.3A).

Cells expressing either mutErbB3 or wtErbB3 had increased pAkt levels, compared with vector-only transfected cells (Fig.3B). After starvation followed by 10 minutes' EGF stimulation, similar pAkt/tAkt ratios were observed in mutErbB3, wtErbB3, and vector-only transfected cells (Fig.3B). However, by 30 minutes, mutErbB3-transfected cells had decreased pAkt/tAkt ratios compared with both wtErBB3 and vector-only transfected cells (Fig.3B). Of note, mutErbB3-expressing cells had increased pERK at the 30-minute time-

point (Fig.3B). These findings show that mutErbB3 is changing the signalling activation profile in response to ligand stimulation.

Together, these results suggest that the EGFR/mutErbB3 heterodimer is more efficiently activated, internalised and degraded, compared with EGFR/wtErbB3.

IHC for ERBB3

ErbB3 is typically upregulated in NSCLC, staining both membrane and cytoplasm.[10] Tumour tissue from the proband (LGCA-1.2) showed weak cytoplasmic ErbB3, with absent staining of normal surrounding lung tissue (Supplementary Results: Figure S1). Results from other tumour samples were inconsistent; notably, less tissue was made available for research from these other individuals as their samples were reserved to inform their ongoing clinical care.

DISCUSSION

We have identified a novel germline mutation in *ERBB3* segregating with autosomal dominant NSCLC. We demonstrate that mutErbB3 is stably expressed, functional with EGFR heterodimerisation and signalling, with an increased ratio of 80kDa vs. full-length 180kDa ErbB, with a faster time-course of signalling activation and degradation and with increased cellular proliferation, compared to wtErbB3. These results support this mutation as an oncogenic driver.

Multiple studies demonstrate the importance of ErbB3 in oncogenesis generally and NSCLC specifically.[11] *ERBB3* is part of a five-gene expression "signature" in NSCLC predictive of relapse-free and overall survival, independent of age, gender, stage and histological characteristics.[12] Our germline *ERBB3* mutation is novel for NSCLC; and has not been reported (as either a somatic or germline mutation) in any other tumour type. Attributing

causality to a variant segregating within a relatively small family just because of its rarity can lead to misattribution[13,14]; hence our comprehensive functional assessment supporting this mutation as causative.

Somatic *ERBB3* mutations are common in colonic and gastric carcinomas but extremely rare in NSCLC (COSMIC and TCGA searches presented in Supplementary Data). A germline *ERBB3* mutation has been reported once previously (c.4009G>A;p.Ala1337Thr) in association with familial erythroleukemia and affecting the C-terminus,[15] in contrast to the mutation reported here (c.1946T>G; p.Ile649Arg) which affects a conserved transmembrane motif key for dimerization.[16] Notably, the *ERBB2* variant (p.Gly660Asp) associated with autosomal dominant NSCLC was located in the corresponding transmembrane motif of HER2[4].

Unsurprisingly, given the rarity of autosomal dominant NSCLC, no additional families were available for replication. Additionally, our study was limited by poor quality tumour DNA, precluding assessment of somatic *ERBB3* mutation(s) either by massively parallel or Sanger sequencing of all exons.

Both wtErbB3 and mutErbB3 were folded and stably expressed. Normally, ErbB3 (180kDa) is expressed as a transmembrane protein dimerised with another ErbB family member. On activation ErbB3 is internalised via ligand-induced receptor mediated endocytosis to endosomes, and subsequently trafficked to lysosomes for proteolytical degradation. Some transmembrane ErB3 is directly cleaved, forming a cytoplasmic stable and active 80kDa form, which effects are normally offset by the tumour suppressor p14ARF sequestering the 80kDa form for degradation.[17] Our results suggest that mutErbB3 is more prone to cleavage, resulting in increased amounts of the cytoplasmic 80kDa form; moreover, this increase in the 80kDa form may exceed the sequestration capacity of p14ARF. Further, the 80kDa form may independently drive proliferation, as it can increase transcription of proliferative genes

without necessarily activating cytoplasmic pathways.[17] Notably, mutErbB3-transfected cells demonstrated increased cellular proliferation compared to wtErbB3.

MutErbB3 co-localised with EGFR; and EGFR levels decreased over time in mutErbB3-transfected cells, compared to wtErbB3-transfected cells. Together, these suggest that EGFR/mutErbB3 dimers internalise and reach the late endosomal/lysosomal system faster than wtErbB3-transfected cells, consistent with more rapid signal transduction with mutErbB3. Further, activation profiles of downstream signalling pathways differed in mutErbB3-transfected cells compared to wtErbB3-transfected cells. These pathways affect transcriptional regulation of cell proliferation and migration, both critical for cancer initiation and metastasis.[7] In summation, these functional studies support this mutation as tumorogenic.

Although ErbB3 is expressed widely, this family has not manifested other malignancies (the proband has had non-cancerous colonic polyps). The apparent tissue specificity is unclear, although consistent with NSCLC families with *ERBB2* and *EGFR*(ERBB1) mutations.[3, 4] Our results may have clinical implications beyond genetic counselling: both germline and somatic EGFR mutations affect NSCLC responsiveness to TKIs; and HER family-targeted therapy can induce prolonged progression-free survival specifically in individuals with TK domain mutations (including NSCLC).[18] The identified *ERBB3* mutation does not lie within this domain; thus, HER family inhibitors may not benefit this family. However, ErbB3 downregulation (e.g. by siRNA) can restore tumour responsiveness to various therapeutic approaches, including TKIs, potentially of clinical relevance for this family.[18]

In conclusion, we report the first family with heritable NSCLC segregating with a germline mutation in *ERBB3*, with functional data strongly supporting this mutation as oncogenic.

Acknowledgements

We thank the family for their gracious participation. Additionally, we thank pathologist David Godbolt; research nurses Deborah Courtney, Linda Passmore, Elisabeth McCaul; Sharon Song for laborartory support, David Pennisi for writing support; and Malcolm Lim. The authors acknowledge the Translational Research Institute for providing the research environment, and microscopy and histology core facilities.

Author Contributions:

KF, RB, IY, JS, AML, ELD and MAB established the study. KF, PI, MG and TH identified and recruited family members to the study. ELD, AML, MAB, JH, SS, LA, PL, FS, SO, SRJ, CC and HYC designed and optimized experimental approach, performed the experiments and analyzed data. ELD, FS, AML, LW, HYC, SRJ and SO co-wrote the manuscript. All authors critically reviewed the manuscript.

Web resources

COSMIC: https://cancer.sanger.ac.uk/cosmic

World Health Organisation statistics: http://globocan.iarc.fr/Pages/fact_sheets_cancer.aspx

Supplementary Data.doc

REFERENCES

1. Bosse Y, Amos CI. A Decade of GWAS Results in Lung Cancer. *Cancer Epidemiol Biomarkers Prev* 2018;27:363-379.
2. Zhou C, Yao LD. Strategies to Improve Outcomes of Patients with EGRF-Mutant Non-Small Cell Lung Cancer: Review of the Literature. *J Thorac Oncol* 2016;11:174-186.
3. Gazdar A, Robinson L, Oliver D, et al. Hereditary lung cancer syndrome targets never smokers with germline EGFR gene T790M mutations. *J Thorac Oncol* 2014;9:456-463.
4. Yamamoto H, Higasa K, Sakaguchi M, et al. Novel germline mutation in the transmembrane domain of HER2 in familial lung adenocarcinomas. *J Natl Cancer Inst* 2014;106:djt338.
5. Karczewski KJ, Francioli L, tiao G, et al. Variation across 141,456 human exomes and genomes reveals the spectrum of loss-of-function intolerance across human protein-coding genes. bioRxiv 531210 [serial online].
6. Guy PM, Platko JV, Cantley LC, et al. Insect cell-expressed p180erbB3 possesses an impaired tyrosine kinase activity. *Proc Natl Acad Sci U S A* 1994;91:8132-8136.
7. Jaiswal BS, Kljavin NM, Stawiski EW, et al. Oncogenic ERBB3 mutations in human cancers. *Cancer Cell* 2013;23:603-617.
8. Lesniewski LA, Hosch SE, Neels JG, et al. Bone marrow-specific Cap gene deletion protects against high-fat diet-induced insulin resistance. *Nat Med* 2007;13:455-462.
9. Amaravadi R, Kimmelman AC, White E. Recent insights into the function of autophagy in cancer. *Genes Dev* 2016;30:1913-1930.
10. Scharpenseel H, Hanssen A, Loges S, et al. EGFR and HER3 expression in circulating tumor cells and tumor tissue from non-small cell lung cancer patients. *Scientific reports* 2019;9:7406.
11. Ma S, Jia S, Ren Y, et al. ErbB3 Ligand Heregulin1 Is a Major Mitogenic Factor for Uncontrolled Lung Cancer Cell Proliferation. *Neoplasia* 2019;21:343-352.
12. Chen HY, Yu SL, Chen CH, et al. A five-gene signature and clinical outcome in non-small-cell lung cancer. *N Engl J Med* 2007;356:11-20.
13. MacArthur DG, Manolio TA, Dimmock DP, et al. Guidelines for investigating causality of sequence variants in human disease. *Nature* 2014;508:469-476.
14. Minikel EV, Vallabh SM, Lek M, et al. Quantifying prion disease penetrance using large population control cohorts. *Sci Transl Med* 2016;8:322ra329.
15. Braunstein EM, Li R, Sobreira N, et al. A germline ERBB3 variant is a candidate for predisposition to erythroid MDS/erythroleukemia. *Leukemia* 2016;30:2242-2245.
16. Mendrola JM, Berger MB, King MC, et al. The single transmembrane domains of ErbB receptors self-associate in cell membranes. *J Biol Chem* 2002;277:4704-4712.
17. Andrique L, Fauvin D, El Maassarani M, et al. ErbB3(80 kDa), a nuclear variant of the ErbB3 receptor, binds to the Cyclin D1 promoter to activate cell proliferation but is negatively controlled by p14ARF. *Cell Signal* 2012;24:1074-1085.
18. Verlingue L, Hollebecque A, Lacroix L, et al. Human epidermal receptor family inhibitors in patients with ERBB3 mutated cancers: Entering the back door. *Eur J Cancer* 2018;92:1-10.

Table 1. Characteristics of Variants Fulfilling Filtering Criteria

Gene	Variant	GERP score	SIFT	MutationTaster	PolyPhen2
ERBB3 (*Erb-B2 Receptor Tyrosine Kinase 3*)	NM_001982: c.1946T>G: p.Ile649Arg	3.87	0.00 (deleterious)	0.995 (disease-causing)	0.121 (benign)
ATG2B (Autophagy related 2B)	NM_018036: c.4057T>A: p.Cys1353Ser	5.48	0.05 (deleterious)	0.999 (disease-causing)	0.978 (probably damaging)
SORBS1 (Sorbin and SH3 domain-containing protein 1)	NM_001034954: c.2464A>G: p.Ile822Val	6.07	0.05 (deleterious*)	0.999 (deleterious)	0.903 (possibly damaging)

FIGURES

Figure 1. Germline *ERBB3* mutation segregating with NSCLC in an affected family. **A**. Family Pedigree. **B**. Sanger sequencing chromatograms of genomic DNA from family members as per pedigree, demonstrating heterozygosity for *ERBB3* c.1946T>G variant (arrow) in three affected individuals and wildtype in the proband's unaffected mother.

Figure 2. ErbB3 expression, folding, response to stimulation with EGF, and effect on cellular proliferation, in HeLa cells transfected with vector-only, wtErbB3, or mutErbB3.

A. Western blot of lysates from transfected cells using two different commercial anti-ErbB3 antibodies. MutErbB3 is stably expressed and normally folded. A higher ratio of 80kDa to full length 180kDa form (arrows) is observed with mutErbB3 compared to wtErbB3.

B. Transfected HeLa cells fixed pre- (0') and post (30')-EGF stimulation and immunostained for ErbB3 (red), endogenous EGFR (purple) and nuclei stained using DAPI (blue). Right column shows merged image. Scale bars, 20µm.

Without stimulation EGFR co-localised with mutErbB3 in concentrated puncta, less evident with wtErbB3. After stimulation, both wtErbB3 and mutErbB3 increased in the perinuclear region, co-localising with EGFR.

C. Proliferation assay of transfected cells quantified and described as fold change relative to vector only (data shown as mean ± S.E.M).

MutErbB3-transfected cells showed increased rates of proliferation.

Figure 3. Analysis of protein expression and down-stream signalling pathway activation in HeLa cells transfected with vector-only, wtErbB3, or mutErbB3 constructs, before

starvation (control), after 3 hours starvation (0 min) followed by EGF stimulation (assessed at 10 min and 30 min).

A. Western blots of ErbB3, EGFR, phospho-Akt (pAkt), total Akt (tAkt), phospho-ERK (pERK) and total ERK (tERK), performed on transfected cell lysates.

Following starvation and EGF stimulation, mutErbB3-transfected cells demonstrated decreased EGFR levels compared with wtErbB3.

B. Ratios of phospho-Akt to total-Akt (pAkt/tAkt) (upper graphs), and phospho-ERK to total-ERK (pERK/tERK) (lower graphs) quantified and normalised to β-Tubulin.

By 30 minutes, mutErbB3-transfected cells show decreased pAkt/tAkt ratio and increased pERK/tERK ratio compared with wtErbB3-transfected cells

Both blot images and ratio quantification are representative of at least three separate biological replicates.

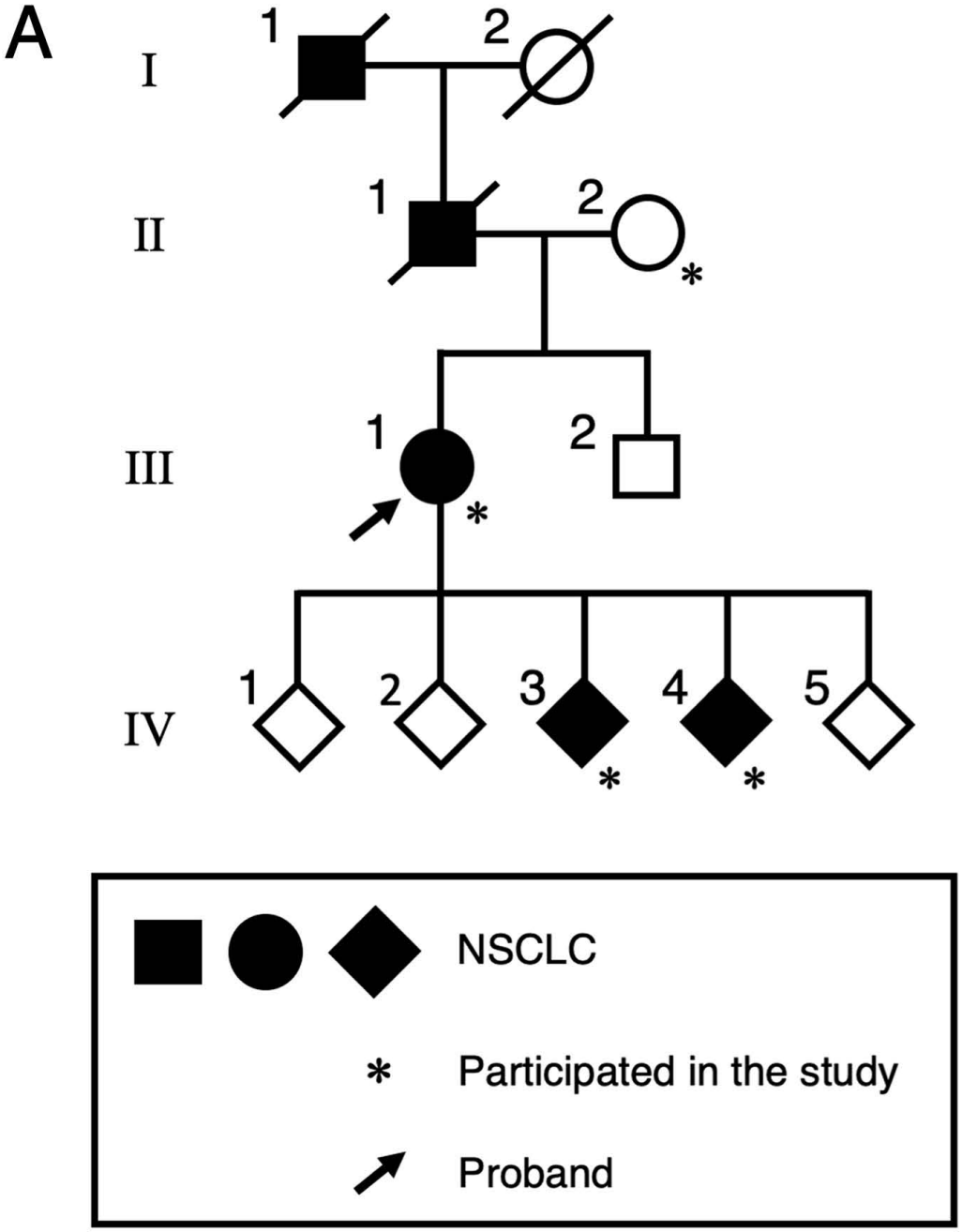
A
I
II
III
IV
1
2
1
2
1
2
1
2
3
4
5
NSCLC
Participated in the study
Proband

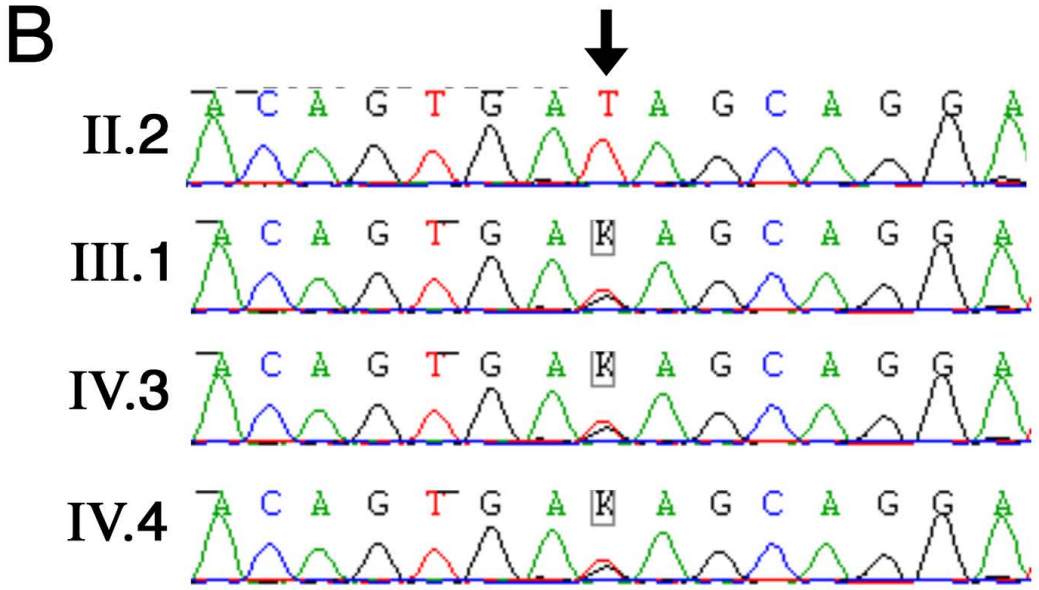
B
II.2
III.1
IV.3
IV.4

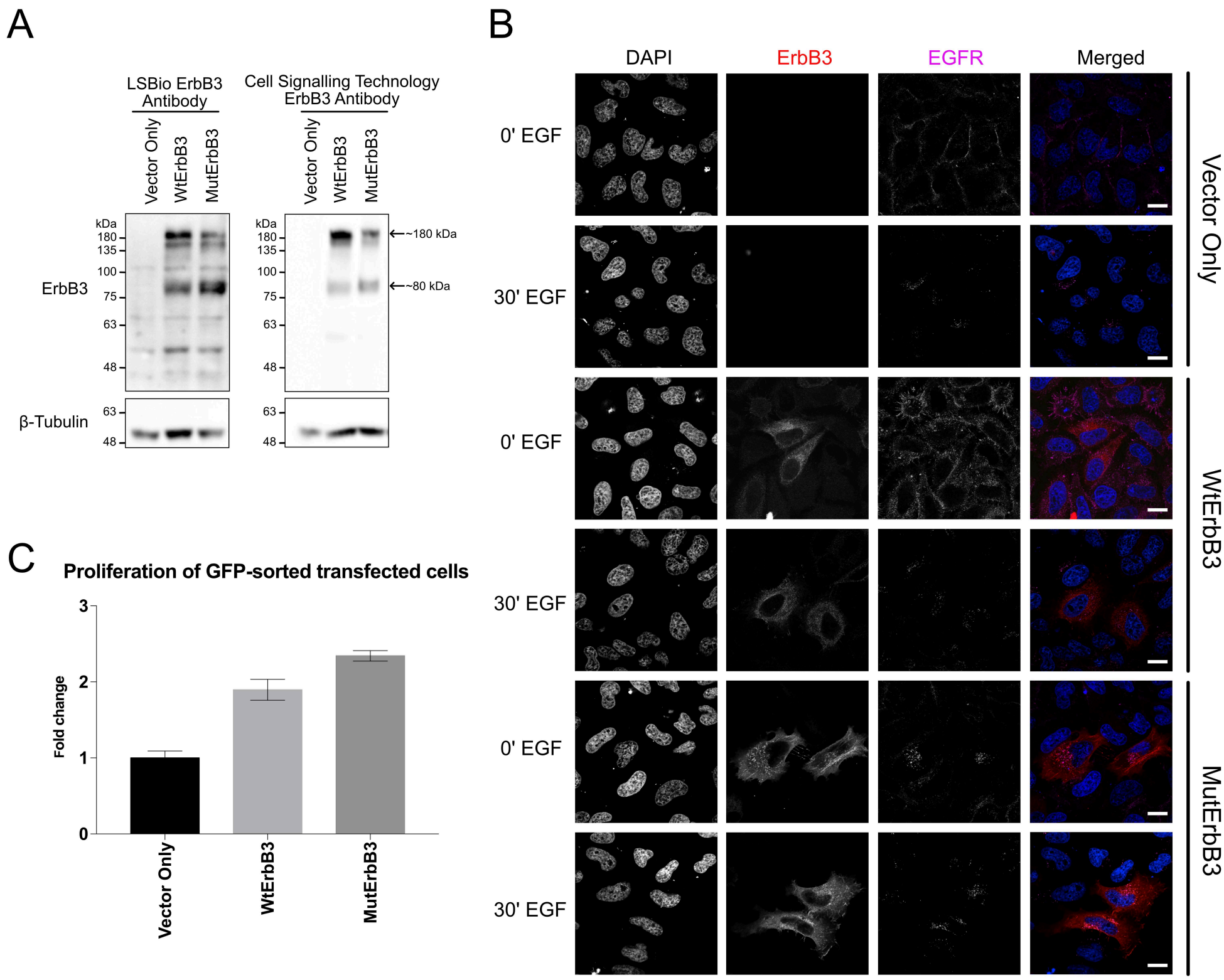
A
LSBio ErbB3 Antibody
Cell Signalling Technology ErbB3 Antibody
Vector Only
WtErbB3
MutErbB3
kDa
180
135
100
75
63
48
ErbB3
β-Tubulin
~180 kDa
~80 kDa
B
DAPI
ErbB3
EGFR
Merged
0' EGF
30' EGF
Vector Only
WtErbB3
MutErbB3
C
Proliferation of GFP-sorted transfected cells
Fold change
0
1
2
3
Vector Only
WtErbB3
MutErbB3

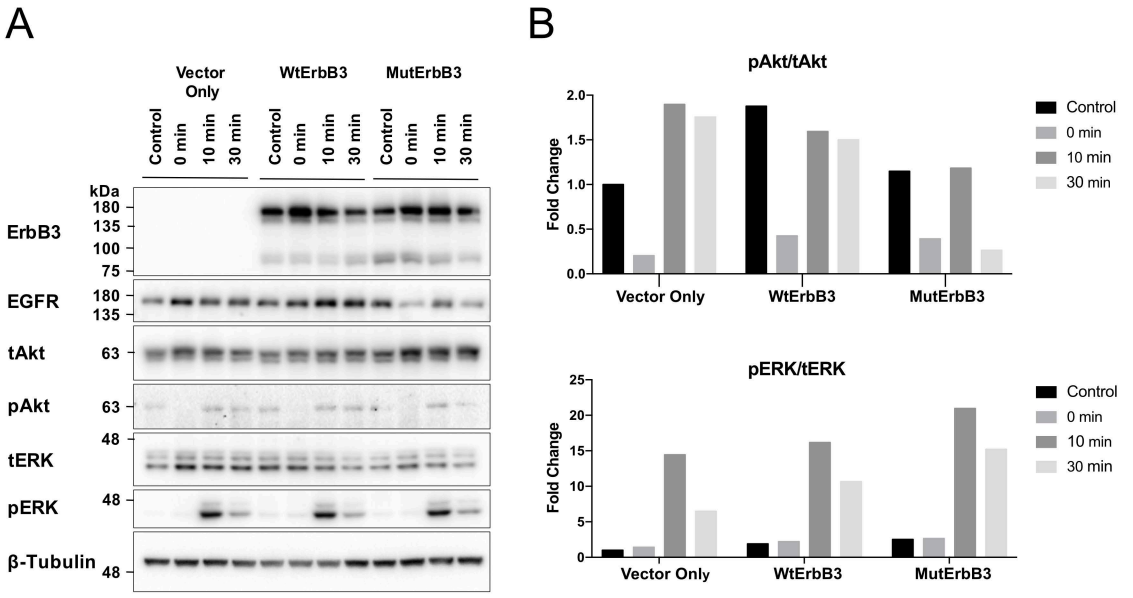
A
Vector Only
WtErbB3
MutErbB3
Control
0 min
10 min
30 min
kDa
ErbB3
EGFR
tAkt
pAkt
tERK
pERK
β-Tubulin
180
135
100
75
63
48
B
pAkt/tAkt
Fold Change
Control
0 min
10 min
30 min
Vector Only
WtErbB3
MutErbB3
pERK/tERK