Phylogenetic diversification of sirtuin genes with a description of a new family member

Juan C. Opazo[1,2], Kattina Zavala[1], Michael W. Vandewege[3] and Federico G. Hoffmann[4,5]

[1]Instituto de Ciencias Ambientales y Evolutivas, Facultad de Ciencias, Universidad Austral de Chile, Valdivia, Chile.
[2]Millennium Nucleus of Ion Channel-Associated Diseases (MiNICAD), Valdivia, Chile.
[3]Department of Biology, Eastern New Mexico University, Portales, New Mexico, USA.
[4]Department of Biochemistry, Molecular Biology, Entomology, and Plant Pathology, Mississippi State University, Starkville, Mississippi, USA.
[5]Institute for Genomics, Biocomputing and Biotechnology, Mississippi State University, Starkville, Mississippi, USA.

Corresponding author:
Juan C. Opazo
Instituto de Ciencias Ambientales y Evolutivas
Facultad de Ciencias
Universidad Austral de Chile
Valdivia, Chile.
jopazo@gmail.com

Abstract
Studying the evolutionary history of gene families is a challenging and exciting task with a wide range of implications. In addition to exploring fundamental questions about the origin and evolution of genes, disentangling their evolution is also critical to those who do functional/structural work, as the correct interpretation of their results needs to be done in a robust evolutionary context. The sirtuin gene family is a group of genes that are involved in a variety of biological functions mostly related to aging. Their duplicative history is an open question, as well as the definition of the repertoire of sirtuin genes among vertebrates. Our goal is to take advantage of the genomic data available in public databases to advance our understanding of how sirtuin genes are related to each other, and to characterize the gene repertoire in species representative of all the main groups of vertebrates. Our results show a well-resolved phylogeny that represents a significant improvement in our understanding of the duplicative history of the sirtuin gene family. We identified a new sirtuin family member (SIRT3-like) that was apparently lost in amniotes, but retained in all other groups of jawed vertebrates. Our results indicate that there are at least eight sirtuin paralogs among vertebrates and that all of them can be traced back to the last common ancestor of the group that existed between 676 and 615 millions of years ago.

Keywords: aging, gene family evolution, gene duplication, SIRT, vertebrates.

Introduction

The availability of whole-genome sequences in representative species of all main groups of vertebrates represents an opportunity to unravel the evolution of gene families. The amount of sequences and their phylogenetic distribution allows performing robust inferences regarding how gene family members are related to each other and a description of the processes associated with the evolution of these gene families (Nei and Rooney 2005). The available genomes also open an opportunity to discover new gene family members that are not currently described mainly because they are not present in model species and/or to the absence of appropriate evolutionary analyses (Wichmann et al. 2016; Céspedes et al. 2017; Himmel et al. 2020). It is important to know the number of gene lineages that belong to a given gene family, as well as the variation in the repertoire of genes between species. This variation could be seen as a natural experiment (Albertson et al. 2009) that could help understand the evolutionary fate of duplicated genes, as individuals with different gene repertoires are capable of fulfilling the biological functions with a different combination of paralogs. In addition, this research is critical to the correct reconstruction of ancestral and derived states, a key piece of information to make robust evolutionary inferences of functional/structural results.

The sirtuin gene family is an ancient group of genes that, in mammals, is composed by seven paralogs (SIRT1-7), grouped into four classes (Fig. 1) (Frye 2000; Frye 2006). Sirtuin genes are involved in a variety of biological functions mostly related to aging, metabolic regulation, stress response, and cell cycle among others (Fig. 1) (Michan and Sinclair 2007; Greiss and Gartner 2009; Haigis and Sinclair 2010; Zhao et al. 2019). All sirtuin genes have a conserved catalytic domain and variable carboxy- and amino terminal domains (Fig. 1). Most family members possess deacetylase activity, while others have, in addition to weak deacetylase activity, other enzymatic activities like ADP-ribosyltransferase, desuccinylase and demalonylase (Fig. 1). Further, they are located in different subcellular compartments and associated to different biological processes (Fig. 1).

The duplicative history of the sirtuin genes is an open question. There are multiple phylogenetic hypotheses describing evolutionary relationships among the genes in the sirtuin family (Frye 2000; North and Verdin 2004; Frye 2006; Greiss and Gartner 2009; Slade et al. 2011; Vassilopoulos et al. 2011; Costantini et al. 2013; Scholte et al. 2017; Simó-Mirabet et al. 2017; Yang et al. 2017; Rajabi et al. 2018; Kabiljo et al. 2019; Zhao et al. 2019). Differences in the taxonomic sampling, differences in the number of paralogs included, and inconsistent use of relevant outgroups, all are likely contributors to this variation. Additionally, studies that are focused on resolving evolutionary relationships among sirtuin genes are scarce, and in fact, most phylogenetic analyses for these genes were part of studies where the sirtuin phylogeny

was a secondary goal. Additionally, and probably for similar reasons, there are no systematic efforts to characterize the full complement of sirtuin family members among vertebrates. Thus, unraveling the duplicative history of sirtuin genes represents a challenging and exciting task with a wide range of implications. Because of their role in the aging process, these genes are of great interest. In addition to exploring fundamental questions about the origin and evolution of sirtuin genes, disentangling their evolution is also critical to understanding the diversification of the functional and structural phenotypes present in the sirtuin gene family.

Accordingly, the goal of this study is to take advantage of the diversity of genomic data available in public databases to advance in our understanding of the diversity of vertebrate sirtuin genes and reconstruct a robust phylogeny for this gene family to infer its duplicative history. Our phylogenetic tree is in general well resolved, representing an improvement in our understanding of the duplicative history of the sirtuin gene family. We also report a new sirtuin family member (SIRT3-like) that was retained in all vertebrates, including cyclostomes, other than amniotes (the group that unites mammals, birds and reptiles).

Material and Methods

Protein sequences and phylogenetic analyses

We retrieved sirtuin amino acid sequences in representative species of all main lineages of vertebrates. Our sampling included mammals, birds, reptiles, amphibians, coelacanths, bony fish, cartilaginous fish and cyclostomes (Supplementary Table S1). Sequences for these groups were obtained from the Orthologous MAtrix project (OMA) (Altenhoff et al. 2018). Protein sequences were aligned using two alternative strategies: 1) aligning individual sequences using MAFFT v.7 (Katoh and Standley 2013), allowing the program to choose the alignment strategy (FFT-NS-2) and 2) aligning each set of sirtuin gene family member, and outgroups, individually using MAFFT v.7 (Katoh and Standley 2013), allowing the program to choose the alignment strategy (in all cases the L-INS-i strategy was the selected one). After that, we merged individual alignments using the function --merge from MAFFT v.7 (Katoh and Standley 2013), also allowing the program to choose the alignment strategy (FFT-NS-2). To select the best-fitting model of molecular evolution we used the proposed model tool in the program IQ-Tree v1.6.12 (Kalyaanamoorthy et al. 2017), which selected the JTT+F+G4 model of amino acid substitution for both alignments. We used a maximum-likelihood approach to obtain the best tree using the program IQ-Tree v1.6.12 (Trifinopoulos et al. 2016). Eleven independent replicate phylogenetic analyses were run to explore tree space, and the tree with the highest likelihood score was chosen. Support for the nodes was evaluated using three approaches: the Shimodaira-Hasegawa approximate likelihood-ratio test (SH-aLRT), the aBayes test from Anisimova et al. (2011) (Anisimova et al. 2011) and

the ultrafast bootstrap procedure (Hoang et al. 2018). Other genes from the DHS-like NAD/FAD-binding domain superfamily were used as outgroups, Deoxyhypusine Synthase (DHPS), Nicotinamide Nucleotide Transhydrogenase (NNT), Electron Transfer Flavoprotein Subunit Alpha (ETFA), 2-Hydroxyacyl-CoA Lyase 1 (HACL1) and IlvB Acetolactate Synthase Like (ILVBL) .

Assessment of conserved synteny

We examined genes found upstream and downstream of the sirtuin genes. For comparative purposes, we used the estimates of orthology and paralogy derived from the Ensembl Compara database (Herrero et al. 2016); these estimates are obtained from a pipeline that considers both synteny and phylogeny to generate orthology mappings. These predictions were visualized using the program Genomicus v100.01 (Nguyen et al. 2018). Our assessments were performed in humans (*Homo sapiens*), chicken (*Gallus gallus*), high Himalaya frog (*Nanorana parkeri*), coelacanth (*Latimeria chalumnae*), spotted gar (*Lepisosteus oculatus*), and elephant shark (*Callorhinchus milii*).

Transcript abundance analyses

Sirtuin transcript abundance was measured from a representative sample of vertebrates including the elephant shark (*Callorhinchus milii*), zebra fish (*Danio rerio*), tropical clawed frog (*Xenopus tropicalis*), anole lizard (*Anolis carolinensis*), and human (*Homo sapiens*). RNASeq libraries from brain, heart, kidney, liver, muscle, ovary, and testis from each species were gathered from the NCBI Short Read Archive (SRA)(Leinonen et al. 2011). Accession numbers for species and tissue specific libraries can be found in Supplemental Table S2. Reference transcript sequences were collected from Ensembl v.100 (Yates et al. 2020) and we removed sequences that were shorter than 100 bp. For each library adapters were removed using Trimmomatic 0.38 (Bolger et al. 2014) and reads were filtered for quality using the parameters HEADCROP:5, SLIDINGWINDOW:5:30, and MINLEN:50. We mapped quality filtered paired-end RNAseq reads back to reference sequences using Bowtie 1.2.2 (Langmead et al. 2009) and default parameters of RSEM (Li and Dewey 2011). Transcripts with < 10 mapped reads across all seven tissues per species were removed prior to normalization. Normalization of raw read counts for each species was performed using the estimateSizeFactors and estimateDispersions functions in DESeq2 v1.26 (Love et al. 2014). If multiple SIRT transcripts were present, we presented the expression data from the transcript with the most mapped reads.

Results and Discussion

We studied the evolutionary relationships of the sirtuin gene family, a group of genes that plays fundamental roles in aging, metabolic regulation, stress response, and the cell cycle, among others, with the aim of understanding their duplicative history and diversity. In addition to addressing fundamental questions about the duplicative history of these genes in vertebrates, a robust phylogenetic framework is a central piece of information to the generation of evolutionary sound inferences about the pathways by which structural and functional properties emerged.

Sirtuin paralogs are recovered into three main clades

Both alignment strategies recovered the monophyly of the sirtuin gene family with strong support, as well as the monophyly of all sirtuin family members (Fig. 2). The exceptions are SIRT3 and SIRT3-like clades for which the phylogenetic position of two cyclostome sequences, hagfish (*Eptatretus burgeri*) and sea lamprey (*Petromyzon marinus*), respectively, was not well resolved when we aligned individual sequences (Fig. 3). The phylogenetic uncertainty of cyclostome sequences is not unexpected, as resolving orthology between cyclostomes and gnathostomes represents a challenge because cyclostomes genomes possess strong compositional biases (Qiu et al. 2011; Smith et al. 2013; Schwarze et al. 2014; Campanini et al. 2015; Opazo et al. 2015; Opazo, Kuraku, et al. 2019). Other than the difficulty in inferring orthology for the cyclostome sequences, the monophyly of the SIRT3 and the SIRT3-like gene lineages from gnathostomes is strongly supported under both alignment strategies (Fig. 3).

The diversity of sirtuin genes was arranged into three main clades (Fig. 2). The first clade contains the SIRT4 and SIRT5 paralogs, the second clade contains the SIRT6 and SIRT7 paralogs, and the third clade includes the SIRT1, SIRT2, SIRT3 and SIRT3-like gene lineages (Fig. 2). A diversity of phylogenetic arrangements for sirtuin genes have been proposed in the past (Frye 2000; Frye 2006; Greiss and Gartner 2009; Slade et al. 2011; Vassilopoulos et al. 2011; Costantini et al. 2013; Scholte et al. 2017; Simó-Mirabet et al. 2017; Yang et al. 2017; Rajabi et al. 2018; Kabiljo et al. 2019; Zhao et al. 2019), and our results largely support the relationships proposed by Frye (2006).

In the first clade we recovered the sister group relationships between SIRT4 and SIRT5 with strong support (Fig. 2). Evolutionary relationships between these two family members are still a matter of debate, as a variety of phylogenetic positions have been suggested for these paralogs (Slade et al. 2011; Vassilopoulos et al. 2011; Costantini et al. 2013; Yang et al. 2017; Rajabi et al. 2018), and only in a fraction of the studies their sister group relationship is supported (Frye 2000; North and Verdin 2004; Frye 2006; Greiss and Gartner 2009; Hirschey 2011; Scholte et al. 2017; Simó-Mirabet et al. 2017; Kabiljo et al. 2019; Zhao et al. 2019). In the second clade, we recovered SIRT6 sister to

the clade containing SIRT7 sequences with strong support (Fig. 2). The sister group relationship between SIRT6 and SIRT7 has been recovered in all examined studies (Frye 2000; North and Verdin 2004; Greiss and Gartner 2009; Hirschey 2011; Slade et al. 2011; Vassilopoulos et al. 2011; Costantini et al. 2013; Scholte et al. 2017; Simó-Mirabet et al. 2017; Yang et al. 2017; Rajabi et al. 2018; Kabiljo et al. 2019; Zhao et al. 2019), suggesting there is robust support for the sister relationship between these sirtuin family members. In the third clade, there is a broad consensus in the literature that SIRT2 shares a common ancestor more recently in time with SIRT3 than with any other sirtuin paralog, and that the clade containing SIRT1 sequences is sister to the SIRT2/SIRT3 clade (Frye 2000; North and Verdin 2004; Frye 2006; Greiss and Gartner 2009; Hirschey 2011; Slade et al. 2011; Vassilopoulos et al. 2011; Costantini et al. 2013; Scholte et al. 2017; Simó-Mirabet et al. 2017; Yang et al. 2017; Rajabi et al. 2018; Zhao et al. 2019). We recovered the same evolutionary relationships with strong support (Fig. 2). The sister-group relationship between the SIRT6/SIRT7 and SIRT2/SIRT3/SIRT1 clades is not supported under the alignment strategy of aligning sequences individually (Fig. 2), but received moderate support when we merged alignments (0.59, aBayes; 95, ultrafast bootstrap; Fig. 2). The sister-group relationships among the three main sirtuin clades is something that has been difficult to resolve (Simó-Mirabet et al. 2017; Zhao et al. 2019), as it appears divergences were close in time, as evidence by the short length of the corresponding branch (Fig. 2).

In summary, we present a phylogenetic analysis based on a taxonomic sampling that included representative species from all main groups of vertebrates for all sirtuin family members. Our phylogenetic tree is in general well resolved (Fig. 2), representing an advance in our understanding of the duplicative history of the sirtuin gene family. In comparison to the phylogenetic trees currently available in the literature only one study shows the same topology as our study (Frye 2006).

Identification of a new sirtuin gene family member, SIRT3-like

We identified a new sirtuin family member, SIRT3-like, which is present in a fraction of the vertebrate tree of life, that was recovered sister to the SIRT3 clade with strong support (Fig. 2 and 3). Synteny conservation provides further support to the monophyly of the SIRT3-like gene lineage in gnathostomes (Supplementary figure 1), as genes found at the 5` side (RIC8B, RFX4, and POLR3B) and 3` side (TMEM263, MTERF2, and CRY1) of the SIRT3-like gene are well conserved (Supplementary figure 1). Synteny is also conserved in species in which the SIRT3-like gene was lost (Supplementary figure 1). Among vertebrates, we found orthologs of the SIRT3-like gene in representative species of cyclostomes, cartilaginous fish, bony fish, coelacanth, and amphibians (Fig. 3). The lack of the SIRT3-like gene in mammals, birds, and reptiles, indicates that it was probably lost in the common ancestor of the group,

between 352 and 312 millions of years ago (Kumar et al. 2017). Thus, our analyses indicate that the last common ancestor of vertebrates had eight sirtuin genes, all of them were retained in all major groups of vertebrates, except SIRT3-like.

An amino acid alignment of the SIRT3-like and SIRT3 sequences shows that the catalytic domain of SIRT3-like is well conserved, where six amino acid positions were identified as diagnostic characters (Fig. 4). The amino acid divergence of the SIRT3-like catalytic domain varies from 32.17% (spotted gar vs coelacanth) to 33.59% (spotted gar vs elephant shark). The same comparisons for the SIRT3 catalytic domain show slightly lower amino acid divergence values, between 24.81% (spotted gar vs coelacanth) and 31.01% (coelacanth vs elephant shark). As expected, the interparalog distance (SIRT3 vs SIRT3-like) of the catalytic domains shows higher divergence values, ranging from 40.7% (spotted gar SIRT3 vs spotted gar SIRT3-like) and 43.63% (elephant shark SIRT3 vs elephant shark SIRT3-like). Although nothing is known about the functional role of the protein encoded by the SIRT3-like gene, based on how sirtuin genes are related to each other and the information already known for the other family members (Fig. 1), we can speculate that SIRT3-like belongs to the class I, has a deacetylase activity, is located on the mitochondria/cytoplasm and is associated to ATP production and thermogenesis (Fig. 1). It is important to highlight that the inferences regarding a newly discovered gene are better performed if they are phylogenetically informed.

Our next step in characterizing the SIRT3-like gene was to investigate whether it is transcribed and if it was, to characterize the transcription pattern To do this, we mapped RNASeq reads to reference gene sequences of representative species of vertebrates and examined transcript abundance. In agreement with the transcription pattern reported for sirtuin genes (Stelzer et al. 2016; Kabiljo et al. 2019), our results show that although they exhibited wide variance in tissue expression, sirtuin genes are expressed in almost all tissues, including the novel SIRT3-like gene lineage (Fig. 5). In the case of the tropical clawed frog, the SIRT3-like gene is transcribed at a similar level in all tissues, other than the ovary where high transcription levels were observed (Fig. 5). In zebrafish, SIRT3-like is transcribed on all examined tissues other than brain and liver (Fig. 5). Finally, and coincident with the pattern observed in the tropical clawed frog, the elephant shark SIRT3-like gene is mostly transcribed in the ovary (Fig. 5). In addition to showing that the SIRT3-like gene is transcribed, our analyses allow us to suggest that this gene could be involved in biological processes associated with reproduction, as in two out of the three sampled species SIRT3-like is mainly transcribed in the ovary. Our study represents the first step and more research is needed to better understand the function of the SIRT3-like in vertebrate physiology.

Conclusions

In summary, we uncover the existence of a novel paralog in the sirtuin gene family of vertebrates, infer the sirtuin repertoire present in the last common ancestor of vertebrates, and reconstruct phylogenetic relationships among them. Resolving their duplicative history allows us to generate evolutionary sound hypotheses about their functional and structural attributes (Fig. 1). The SIRT3-like gene is an old gene that has been retained and is transcribed in all vertebrates other than mammals, birds, and reptiles. This case highlights the need for more exhaustive assessments of orthology with a more broad taxonomic sampling to better define the membership composition of gene families (Glover et al. 2019). The lack of description of family members is not uncommon; it could be mainly due to the absence in model species and/or appropriate evolutionary analyses. In the literature, there are examples in which more comprehensive analyses provide a better description of the membership composition of gene families, including previously unknown family members with an ancient evolutionary origin (Castro et al. 2012; Wichmann et al. 2016; Céspedes et al. 2017; Ramos-Vicente et al. 2018; Opazo, Kuraku, et al. 2019; Opazo, Hoffmann, et al. 2019). The availability of species with different gene repertoires, as a result of a birth-and-death process, could be seen as a natural experiment (Albertson et al. 2009) that helps understand the evolutionary fate of duplicated genes, as they are capable of fulfilling the biological functions associated to the gene family but with a different combination of paralogs.

Acknowledgements

This work was supported by the Fondo Nacional de Desarrollo Científico y Tecnológico from Chile (FONDECYT 1160627) and Millennium Nucleus of Ion Channels Associated Diseases (MiNICAD), Iniciativa Científica Milenio, Ministry of Economy, Development and Tourism from Chile to JCO, National Science Foundation (EPS-0903787, DBI-1262901 and DEB-1354147) to F.G.H.

Conflict of interest disclosure

The authors of this preprint declare that they have no financial conflict of interest with the content of this article.

Figure legends

Figure 1. Gene phylogeny, synteny, catalytic domain, protein size, molecular weight, enzymatic activity, subcellular localization and biological process associated with sirtuin genes. Information regarding the sister group relationships was obtained from this study, synteny from ENSEMBL v.100 (Yates et al. 2020), catalytic domain, protein size, enzymatic activity and subcellular localization from Fujita and Yamashita (2018), molecular weight from Vassilopoulos et al. (2011), while the biological processes from Haigis and Sinclair (2010).

Figure 2. Maximum likelihood tree showing sister group relationships among sirtuin genes of vertebrates. Numbers above the nodes correspond to support from the Shimodaira-Hasegawa approximate likelihood-ratio test, aBayes and maximum likelihood ultrafast bootstrap values under the strategy of aligning individual sequences. Numbers below the nodes correspond to the same support values under the alignment strategy of aligning alignments. Deoxyhypusine Synthase (DHPS), Nicotinamide Nucleotide Transhydrogenase (NNT), Electron Transfer Flavoprotein Subunit Alpha (ETFA), 2-Hydroxyacyl-CoA Lyase 1 (HACL1) and IlvB Acetolactate Synthase Like (ILVBL) were used as outgroups (not shown). The scale denotes substitutions per site and colors represent gene lineages.

Figure 3. Maximum likelihood tree showing sister group relationships among SIRT3 and SIRT3-like genes in vertebrates. Numbers above the nodes correspond to support from the Shimodaira-Hasegawa approximate likelihood-ratio test, aBayes and maximum likelihood ultrafast bootstrap values under the strategy of aligning individual sequences. Numbers below the nodes correspond to the same support values under the alignment strategy of aligning alignments. The scale denotes substitutions per site and colors represent gene lineages. This tree does not represent a novel phylogenetic analysis; it is the SIRT3/SIRT3-like clade that was recovered from figure 2.

Figure 4. Alignment of the catalytic domain of SIRT3 in humans (*Homo sapiens*), and SIRT3 and SIRT3-like of spotted gar (*Lepisosteus oculatus*), coelacanth (*Latimeria chalumnae*) and elephant shark (*Callorhinchus milii*). The shaded region denotes the catalytic domain. Diagnostic characters -i.e. amino acids positions that distinguish between SIRT3 and SIRT3-like gene lineages - are indicated with a rectangle.

Figure 5. Heatmap representation of transcription levels of sirtuin genes among vertebrates. Transcription values were calculated independently for each species and normalized over all tissues.

Literature

Albertson RC, Craig Albertson R, Cresko W, William Detrich H, Postlethwait JH. 2009. Evolutionary mutant models for human disease. Trends in Genetics [Internet] 25:74–81. Available from: http://dx.doi.org/10.1016/j.tig.2008.11.006

Altenhoff AM, Glover NM, Train C-M, Kaleb K, Warwick Vesztrocy A, Dylus D, de Farias TM, Zile K, Stevenson C, Long J, et al. 2018. The OMA orthology database in 2018: retrieving evolutionary relationships among all domains of life through richer web and programmatic interfaces. Nucleic Acids Res. 46:D477–D485.

Anisimova M, Gil M, Dufayard J-F, Dessimoz C, Gascuel O. 2011. Survey of branch support methods demonstrates accuracy, power, and robustness of fast likelihood-based approximation schemes. Syst. Biol. 60:685–699.

Bolger AM, Lohse M, Usadel B. 2014. Trimmomatic: a flexible trimmer for Illumina sequence data. Bioinformatics 30:2114–2120.

Campanini EB, Vandewege MW, Pillai NE, Tay B-H, Jones JL, Venkatesh B, Hoffmann FG. 2015. Early Evolution of Vertebrate Mybs: An Integrative Perspective Combining Synteny, Phylogenetic, and Gene Expression Analyses. Genome Biol. Evol. 7:3009–3021.

Castro LFC, Lopes-Marques M, Gonçalves O, Wilson JM. 2012. The evolution of pepsinogen C genes in vertebrates: duplication, loss and functional diversification. PLoS One 7:e32852.

Céspedes HA, Zavala K, Vandewege MW, Opazo JC. 2017. Evolution of the α-adrenoreceptors in vertebrates: ADRA2D is absent in mammals and crocodiles. Gen. Comp. Endocrinol. 250:85–94.

Costantini S, Sharma A, Raucci R, Costantini M, Autiero I, Colonna G. 2013. Genealogy of an ancient protein family: the Sirtuins, a family of disordered members. BMC Evol. Biol. 13:60.

Frye RA. 2000. Phylogenetic classification of prokaryotic and eukaryotic Sir2-like proteins. Biochem. Biophys. Res. Commun. 273:793–798.

Frye RA. 2006. Evolution of Sirtuins From Archaea to Vertebrates. Histone Deacetylases [Internet]:183–202. Available from: http://dx.doi.org/10.1385/1-59745-024-3:183

Glover N, Dessimoz C, Ebersberger I, Forslund SK, Gabaldón T, Huerta-Cepas J, Martin M-J, Muffato M, Patricio M, Pereira C, et al. 2019. Advances and Applications in the Quest for Orthologs. Mol. Biol. Evol. 36:2157–2164.

Greiss S, Gartner A. 2009. Sirtuin/Sir2 phylogeny, evolutionary considerations and structural conservation. Mol. Cells 28:407–415.

Haigis MC, Sinclair DA. 2010. Mammalian sirtuins: biological insights and disease relevance. Annu. Rev. Pathol. 5:253–295.

Herrero J, Muffato M, Beal K, Fitzgerald S, Gordon L, Pignatelli M, Vilella AJ, Searle SMJ, Amode R, Brent S, et al. 2016. Ensembl comparative genomics resources. Database [Internet] 2016. Available from: http://dx.doi.org/10.1093/database/bav096

Himmel NJ, Gray TR, Cox DN. 2020. Phylogenetics Identifies Two Eumetazoan TRPM Clades and an Eighth TRP Family, TRP Soromelastatin (TRPS). Mol. Biol. Evol. 37:2034–2044.

Hirschey MD. 2011. Old enzymes, new tricks: sirtuins are NAD(+)-dependent de-acylases. Cell Metab. 14:718–719.

Hoang DT, Chernomor O, von Haeseler A, Minh BQ, Vinh LS. 2018. UFBoot2: Improving the Ultrafast Bootstrap Approximation. Mol. Biol. Evol. 35:518–522.

Kabiljo J, Murko C, Pusch O, Zupkovitz G. 2019. Spatio-temporal expression profile of sirtuins during aging of the annual fish Nothobranchius furzeri. Gene Expression Patterns [Internet] 33:11–19. Available from: http://dx.doi.org/10.1016/j.gep.2019.05.001

Kalyaanamoorthy S, Minh BQ, Wong TKF, von Haeseler A, Jermiin LS. 2017. ModelFinder: fast model selection for accurate phylogenetic estimates. Nat. Methods 14:587–589.

Katoh K, Standley DM. 2013. MAFFT multiple sequence alignment software version 7: improvements in performance and usability. Mol. Biol. Evol. 30:772–780.

Kumar S, Stecher G, Suleski M, Hedges SB. 2017. TimeTree: A Resource for Timelines, Timetrees, and Divergence Times. Mol. Biol. Evol. 34:1812–1819.

Langmead B, Trapnell C, Pop M, Salzberg SL. 2009. Ultrafast and memory-efficient alignment of short DNA sequences to the human genome. Genome Biol. 10:R25.

Leinonen R, Sugawara H, Shumway M, International Nucleotide Sequence Database Collaboration. 2011. The sequence read archive. Nucleic Acids Res. 39:D19–D21.

Li B, Dewey CN. 2011. RSEM: accurate transcript quantification from RNA-Seq data with or without a reference genome. BMC Bioinformatics [Internet] 12. Available from: http://dx.doi.org/10.1186/1471-2105-12-323

Love MI, Huber W, Anders S. 2014. Moderated estimation of fold change and

dispersion for RNA-seq data with DESeq2. Genome Biol. 15:550.

Michan S, Sinclair D. 2007. Sirtuins in mammals: insights into their biological function. Biochem. J 404:1–13.

Nei M, Rooney AP. 2005. Concerted and birth-and-death evolution of multigene families. Annu. Rev. Genet. 39:121–152.

Nguyen NTT, Vincens P, Roest Crollius H, Louis A. 2018. Genomicus 2018: karyotype evolutionary trees and on-the-fly synteny computing. Nucleic Acids Res. 46:D816–D822.

North BJ, Verdin E. 2004. Sirtuins: Sir2-related NAD-dependent protein deacetylases. Genome Biol. 5:224.

Opazo JC, Hoffmann FG, Zavala K, Edwards SV. 2019. Evolution of the DAN gene family in vertebrates. Evolutionary Biology:185.

Opazo JC, Kuraku S, Zavala K, Toloza-Villalobos J, Hoffmann FG. 2019. Evolution of nodal and nodal-related genes and the putative composition of the heterodimers that trigger the nodal pathway in vertebrates. Evolution & Development [Internet] 21:205–217. Available from: http://dx.doi.org/10.1111/ede.12292

Opazo JC, Lee AP, Hoffmann FG, Toloza-Villalobos J, Burmester T, Venkatesh B, Storz JF. 2015. Ancient Duplications and Expression Divergence in the Globin Gene Superfamily of Vertebrates: Insights from the Elephant Shark Genome and Transcriptome. Mol. Biol. Evol. 32:1684–1694.

Qiu H, Hildebrand F, Kuraku S, Meyer A. 2011. Unresolved orthology and peculiar coding sequence properties of lamprey genes: the KCNA gene family as test case. BMC Genomics 12:325.

Rajabi N, Galleano I, Madsen AS, Olsen CA. 2018. Targeting Sirtuins: Substrate Specificity and Inhibitor Design. Prog. Mol. Biol. Transl. Sci. 154:25–69.

Ramos-Vicente D, Ji J, Gratacòs-Batlle E, Gou G, Reig-Viader R, Luís J, Burguera D, Navas-Perez E, García-Fernández J, Fuentes-Prior P, et al. 2018. Metazoan evolution of glutamate receptors reveals unreported phylogenetic groups and divergent lineage-specific events. Elife [Internet] 7. Available from: http://dx.doi.org/10.7554/eLife.35774

Scholte LLS, Mourão MM, Pais FS-M, Melesina J, Robaa D, Volpini AC, Sippl W, Pierce RJ, Oliveira G, Nahum LA. 2017. Evolutionary relationships among protein lysine deacetylases of parasites causing neglected diseases. Infect. Genet. Evol. 53:175–188.

Schwarze K, Campbell KL, Hankeln T, Storz JF, Hoffmann FG, Burmester T. 2014. The

globin gene repertoire of lampreys: convergent evolution of hemoglobin and myoglobin in jawed and jawless vertebrates. Mol. Biol. Evol. 31:2708–2721.

Simó-Mirabet P, Bermejo-Nogales A, Calduch-Giner JA, Pérez-Sánchez J. 2017. Tissue-specific gene expression and fasting regulation of sirtuin family in gilthead sea bream (Sparus aurata). Journal of Comparative Physiology B [Internet] 187:153–163. Available from: http://dx.doi.org/10.1007/s00360-016-1014-0

Slade KM, Freggiaro S, Cottrell KA, Smith JJ, Wiley EA. 2011. Sirtuin-mediated nuclear differentiation and programmed degradation in Tetrahymena. BMC Cell Biol. 12:40.

Smith JJ, Kuraku S, Holt C, Sauka-Spengler T, Jiang N, Campbell MS, Yandell MD, Manousaki T, Meyer A, Bloom OE, et al. 2013. Sequencing of the sea lamprey (Petromyzon marinus) genome provides insights into vertebrate evolution. Nat. Genet. 45:415–421, 421e1–e2.

Stelzer G, Rosen N, Plaschkes I, Zimmerman S, Twik M, Fishilevich S, Stein TI, Nudel R, Lieder I, Mazor Y, et al. 2016. The GeneCards Suite: From Gene Data Mining to Disease Genome Sequence Analyses. Curr. Protoc. Bioinformatics 54:1.30.1–1.30.33.

Trifinopoulos J, Nguyen L-T, von Haeseler A, Minh BQ. 2016. W-IQ-TREE: a fast online phylogenetic tool for maximum likelihood analysis. Nucleic Acids Res. 44:W232–W235.

Vassilopoulos A, Fritz KS, Petersen DR, Gius D. 2011. The human sirtuin family: evolutionary divergences and functions. Hum. Genomics 5:485–496.

Wichmann IA, Zavala K, Hoffmann FG, Vandewege MW, Corvalán AH, Amigo JD, Owen GI, Opazo JC. 2016. Evolutionary history of the reprimo tumor suppressor gene family in vertebrates with a description of a new reprimo gene lineage. Gene 591:245–254.

Yang L, Ma X, He Y, Yuan C, Chen Q, Li G, Chen X. 2017. Sirtuin 5: a review of structure, known inhibitors and clues for developing new inhibitors. Sci. China Life Sci. 60:249–256.

Yates AD, Achuthan P, Akanni W, Allen J, Allen J, Alvarez-Jarreta J, Amode MR, Armean IM, Azov AG, Bennett R, et al. 2020. Ensembl 2020. Nucleic Acids Res. 48:D682–D688.

Zhao E, Hou J, Ke X, Abbas MN, Kausar S, Zhang L, Cui H. 2019. The Roles of Sirtuin Family Proteins in Cancer Progression. Cancers [Internet] 11. Available from: http://dx.doi.org/10.3390/cancers11121949

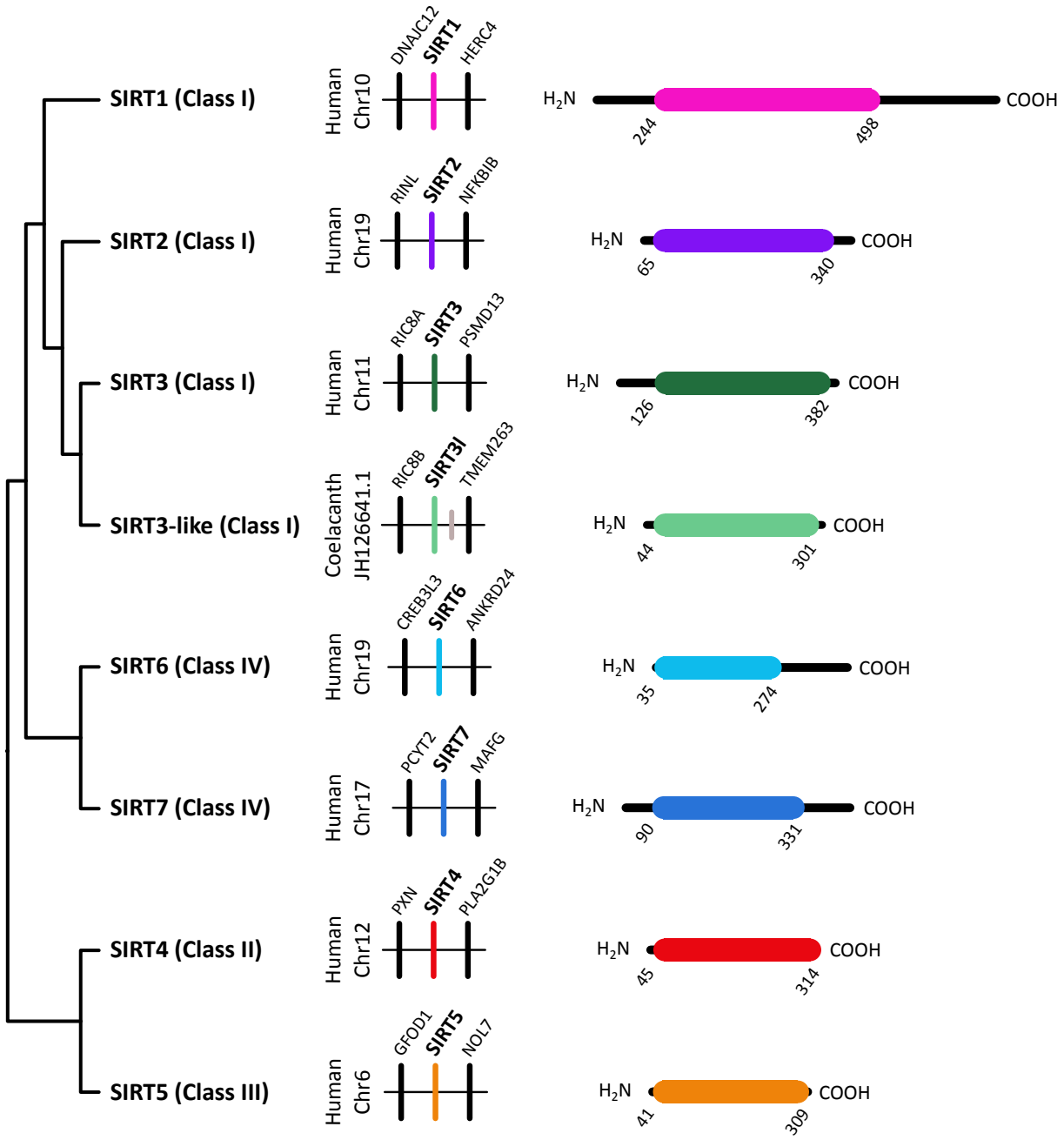

Protein Size	MW (KD)	Enzymatic activity	Subcellular localization	Biological process
747	81.7	Deacetylase	Nucleus Cytoplasm	Metabolism, stress
389	41.5	Deacetylase	Nucleus Cytoplasm	Cell cycle
399	43.6	Deacetylase	Mitochondria Cytoplasm	Thermogenesis, ATP production
318	35.6	?	?	?
355	39.1	Deacetylase & ADP-ribosyltransferase	Nucleus	Base excision repair, metabolism
400	44.9	Deacetylase	Nucleolus	rDNA transcription
314	35.2	ADP-ribosyltransferase	Mitochondria	Insulin secretion
310	33.9	Deacetylase, Desuccinylase & Demalonylase	Mitochondria	Urea cycle

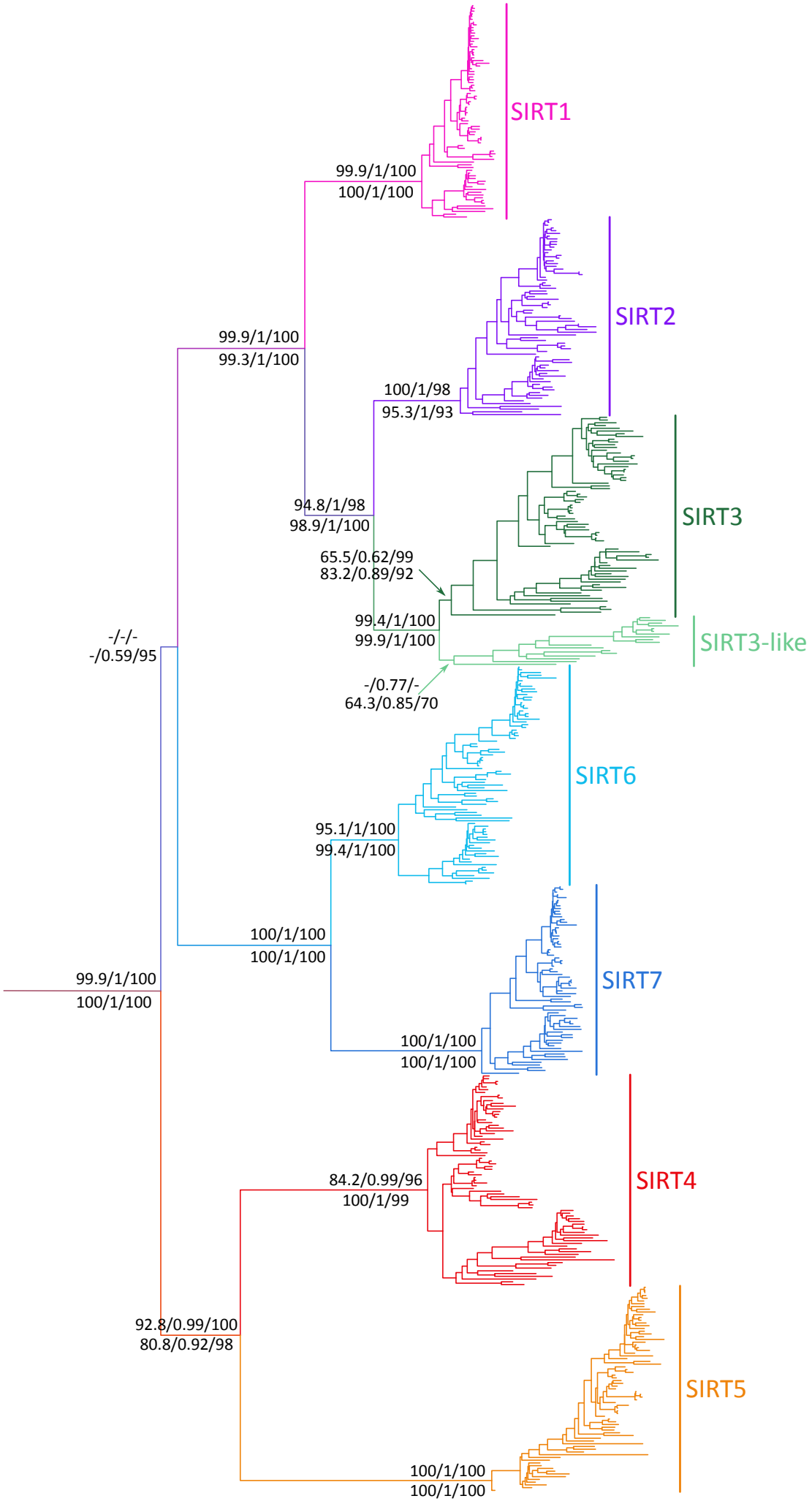
SIRT1
SIRT2
SIRT3
SIRT3-like
SIRT6
SIRT7
SIRT4
SIRT5
99.9/1/100
100/1/100
99.9/1/100
99.3/1/100
100/1/98
95.3/1/93
94.8/1/98
98.9/1/100
65.5/0.62/99
83.2/0.89/92
99.4/1/100
99.9/1/100
-/-/-
-/0.59/95
-/0.77/-
64.3/0.85/70
95.1/1/100
99.4/1/100
100/1/100
100/1/100
99.9/1/100
100/1/100
100/1/100
100/1/100
84.2/0.99/96
100/1/99
92.8/0.99/100
80.8/0.92/98
100/1/100
100/1/100
2.0

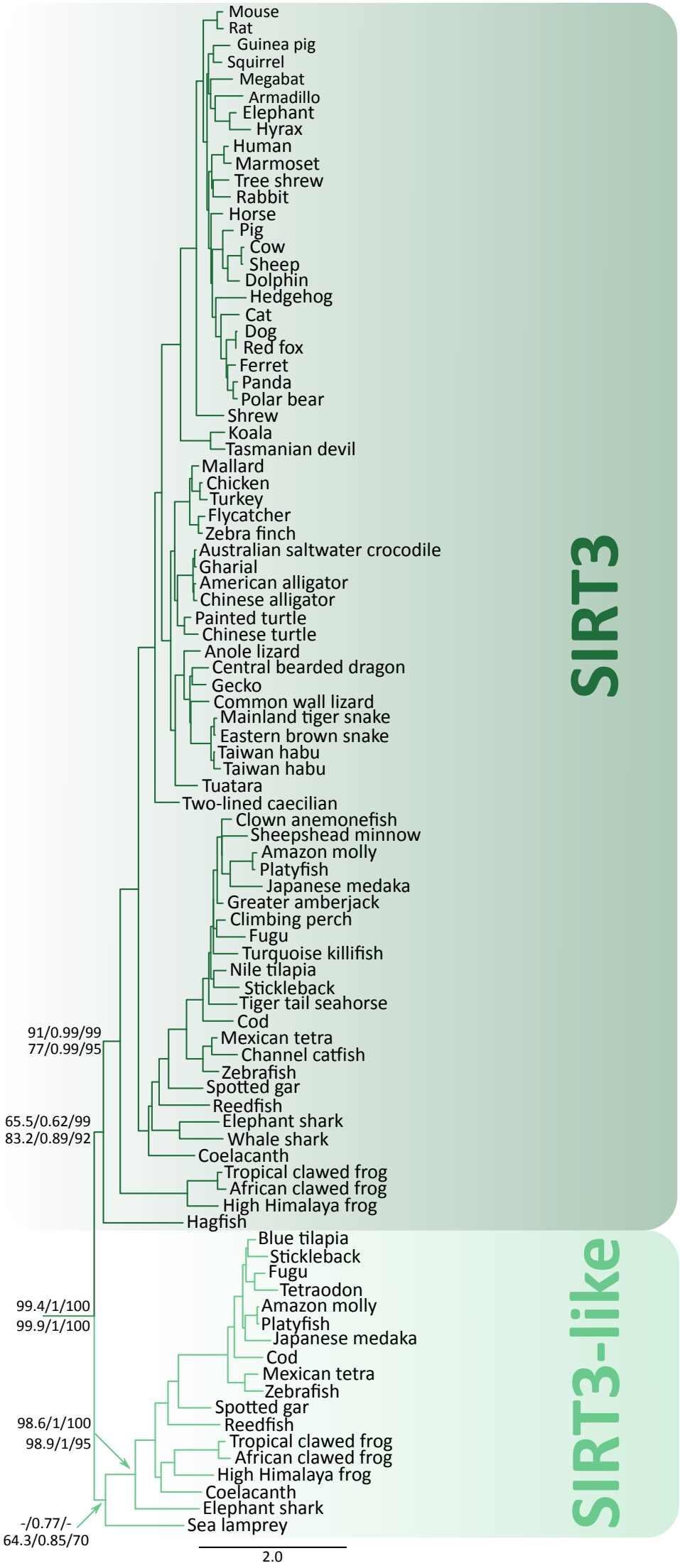
Mouse
Rat
Guinea pig
Squirrel
Megabat
Armadillo
Elephant
Hyrax
Human
Marmoset
Tree shrew
Rabbit
Horse
Pig
Cow
Sheep
Dolphin
Hedgehog
Cat
Dog
Red fox
Ferret
Panda
Polar bear
Shrew
Koala
Tasmanian devil
Mallard
Chicken
Turkey
Flycatcher
Zebra finch
Australian saltwater crocodile
Gharial
American alligator
Chinese alligator
Painted turtle
Chinese turtle
Anole lizard
Central bearded dragon
Gecko
Common wall lizard
Mainland tiger snake
Eastern brown snake
Taiwan habu
Taiwan habu
Tuatara
Two-lined caecilian
Clown anemonefish
Sheepshead minnow
Amazon molly
Platyfish
Japanese medaka
Greater amberjack
Climbing perch
Fugu
Turquoise killifish
Nile tilapia
Stickleback
Tiger tail seahorse
Cod
Mexican tetra
Channel catfish
Zebrafish
Spotted gar
Reedfish
Elephant shark
Whale shark
Coelacanth
Tropical clawed frog
African clawed frog
High Himalaya frog
Hagfish
91/0.99/99
77/0.99/95
65.5/0.62/99
83.2/0.89/92
SIRT3
Blue tilapia
Stickleback
Fugu
Tetraodon
Amazon molly
Platyfish
Japanese medaka
Cod
Mexican tetra
Zebrafish
Spotted gar
Reedfish
Tropical clawed frog
African clawed frog
High Himalaya frog
Coelacanth
Elephant shark
Sea lamprey
99.4/1/100
99.9/1/100
98.6/1/100
98.9/1/95
-/0.77/-
64.3/0.85/70
SIRT3-like
2.0

```
                                  126                 136                 146                 156                 166                 176                 186
Human Sirt3                 S S D K G K L S L Q D V A E L I R A R A C Q R V V V M V G A G I S T P S G I P D F R S P G S G L Y S N L Q Q Y D L P Y P E A I F E L P F F F
Spotted gar Sirt3           G G S Q E Q Q T L Q D V A R F I R D Q E Y K R I V V M A G A G I S T P S G I P D F R S P G S G L Y D N L Q Q Y D L P Y A E A I F E I N Y F R
Coelacanth Sirt3            G S E Q K Q Q L L E D I A R K I R N R E C N R I V V M A G A G I S T P S G I P D F R S P G S G L Y D N L R H F G I P Y P E A V F E I N Y F L
Elephant shark Sirt3        G S S Q R A S S L E D V A S L V R N K E C Q R I V V M A G A G I S T A S G I P D F R S P G S G L Y D N L Q T Y D I P Y P E A I F E I D Y F H
Spotted gar Sirt3-like      R A P S Q L R N L E D V A R L I Q Q R P C R N I I V V A G A G I S T A S G I P D F R T P E S G L Y A N L Q K Y N I P Y P E A I F D I D Y F T
Coelacanth Sirt3-like       S V G G K L K N L N D I A A L I L Y K R C K N I I I I A G A G I S T A S G I P D F R T P G T G L Y D N L Q Q Y N I P C P E A I F D I D Y F T
Elephant shark Sirt3-like   N A R G K L T K L Q D V A A L I R N R H C R N I V V M A G A G I S T A S G I P D F R T P G T G L Y D N L E E Y N V P Y P E A I F D E S Y F V

                                  196                 206                 216                 226                 236                 246                 256
Human Sirt3                 H N P K P F F T L A K E L Y P G N Y K P N V T H Y F L R L L H D K G L L L R L Y T Q N I D G L E R V S G I P A S K L V E A H G T F A S A T C
Spotted gar Sirt3           H N P K P F F A L A K E L Y P G N Y L P N L T H F F I R L L H D K G L L H R M Y T Q N I D G L E R M A G I P S S K L V E A H G T F A T A T C
Coelacanth Sirt3            H D P K P F Y S L A K E L Y P G N Y K P N W A H Y F V R L L Y K K G M L L R M Y T Q N I D G L E R L A G I P P S M L V E A H G S F A T A S C
Elephant shark Sirt3        C N P K P F F V L A K E L Y P G S C W P N F T H Y F V R L L H Q K G I L L R M Y T Q N I D G L E R M A G I P P E K L V E A H G T F A T A T C
Spotted gar Sirt3-like      C D P Q P F F S L A K E L Y P G C Y R P N Y V H Y F V R M L H E K G L L L R M Y T Q N I D G L E R I S G I P E E K L V E A H G T F S S A S C
Coelacanth Sirt3-like       Y N P K P F F S L V K E L Y P G N Y Q P N Y I H Y F V K M L H E K G L L L K M Y T Q N I D G L E R K A G I P S E K L V E A H G T F S T A S C
Elephant shark Sirt3-like   H N P L P F F S L A K K L Y T E N Y K P N Y I H Y F L R M L H E K G L L L R L Y T Q N I D G L E R M A G I P S I K M V E A H G T F L T A S C

                                  266                 276                 286                 296                 305                 315                 325
Human Sirt3                 T V C Q R P F P G E D I R A D V M A D R V P R C P V C T G V V K P D I V F F G E P L P Q R F L - L H V V D F P M A D L L L I L G T S L E V E
Spotted gar Sirt3           T V C R T S Y P G E A L R A E I L E S K I P K C P S C K G V L K P D I V F F G E E L P Q Q F F - L Y L T D F P M A D L L I V M G T S L E V E
Coelacanth Sirt3            T V C C E S Y P G E N F R D E V M E G K V P L C P I C T G V I K P D I I F F G Q E L P K R F F - L Y L T D F P L A D L L I I M G T S L E V E
Elephant shark Sirt3        T V C L K A Y S W E E L R D D V M Q S K V P Q C A T C S G V I K P D I V F F G E Q L P Q K F D - L H M L D L P L A D L L V I M G T S L E V E
Spotted gar Sirt3-like      H L C Y T K F P V T E A K K L I L S N K V P R C K N C Q G T V K P D V V F F G E D L P K K F F - L H T K D F P K A D L L I I M G T S L Q I E
Coelacanth Sirt3-like       H S C C K P F P A K I A Q E A I M N D K I P R C K A C S G I V K P D I V F F G E D L P K R F Y - R F S K D F V N A D L V F I M G T S L E I E
Elephant shark Sirt3-like   S S C R S P Y P A S K A K A E I L S D K I P K C K R C T G I V K P D I V F F G E D L P K R F H S L Y R K D F Y K S D L L I V M G T S L E I E

                                  335                 345                 355                 364                 374                 384
Human Sirt3                 P F A S L T E A V R S S V P R L L I N R D L V G P L A W H P - R S R D V A Q L G D V V H G V E S L V E L L G W T E E M R D L V Q R E T
Spotted gar Sirt3           P F A S L A G A V R S S V P R V L I N R D L V G P F A Y P S P R P N D V V E Q G D V I T G V Q K F V D T L G W G E E L N E L I A V E T
Coelacanth Sirt3            P F A S L A G A V R S S V T R L L I N R D L V G P F S W Y S - R S N D V V E L G E V I G G V R K F V D L L G W K E E M K D L I E R E T
Elephant shark Sirt3        P F A S L S G M V R G S V P R V L I N Q D L V G S F V R N P P R G G D V T E L G D I V R G V E R F A E L L G W K Q E V N D L L Q R E H
Spotted gar Sirt3-like      P F A S I V N T V K A T V P R L L L N R D P I G P F Q K I P L K R T D F M E L G D L V D G V K M F A R H L G W H E E I E D L I R R H E
Coelacanth Sirt3-like       P F A S I V D S A R S Y V P R L L L N R D L V G P F K R K P M R N T D V A E L G D L I E N I K R L V G I L G W E E K M D E L I R A H T
Elephant shark Sirt3-like   P F A G I V N S V Q P N V P R L L L N R D P V G P F Q G K C L K K T D V R A L G D L T K S I Q L F V D M V G W K N D L D E L I Q E R A
```

Human
Anole lizard
Tropical Clawed frog
Zebra fish
Elephant shark
SIRT1
SIRT2
SIRT3
SIRT3–like
SIRT4
SIRT5
SIRT6
SIRT7
Muscle
Kidney
Brain
Heart
Liver
Ovary
Testis
log2(normalized read count)
0
2
4
6
8
10

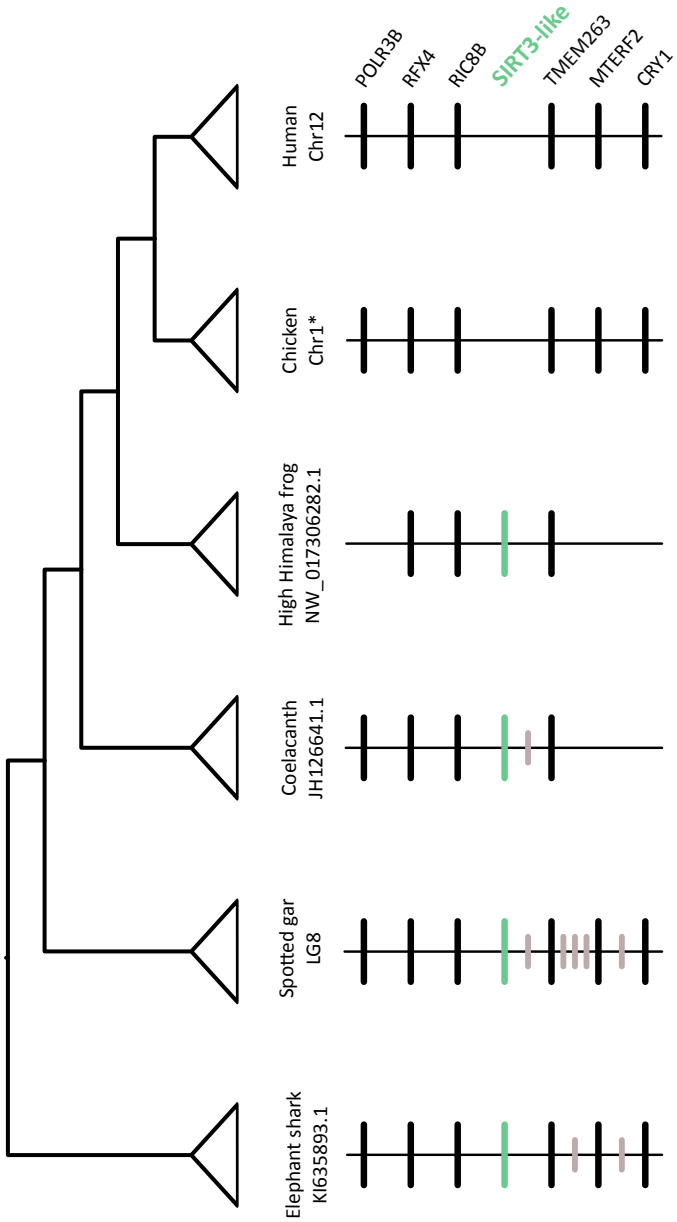

Supplementary figure 1. Patterns of conserved synteny in the chromosomal regions that harbor the SIRT3-like gene of gnathostomes. Asteriks indicate that the orientation of the genomic piece is from 3' to 5', whereas gray lines represent genes that do not contribute to conserved synteny.