A mobile genetic element increases bacterial host fitness by manipulating development

Joshua M. Jones[1], Ilana Grinberg[2], Avigdor Eldar[2,*], and Alan D. Grossman[1,*]

[1]Department of Biology

Massachusetts Institute of Technology

Cambridge, MA 02139 USA

[2]The Shmunis School of Biomedicine and Cancer Research

Faculty of Life Sciences

Tel Aviv University

Tel Aviv 69978, Israel

*Corresponding authors:
email: avigdor@gmail.com
email: adg@mit.edu

Abstract

Horizontal gene transfer is a major force in bacterial evolution. Mobile genetic elements are responsible for much of horizontal gene transfer and also carry beneficial cargo genes. Uncovering strategies used by mobile genetic elements to benefit host cells is crucial for understanding their stability and spread in populations. We describe a benefit that ICE*Bs1*, an integrative and conjugative element of *Bacillus subtilis*, provides to its host cells. Activation of ICE*Bs1* conferred a frequency-dependent selective advantage to host cells during two different developmental processes: biofilm formation and sporulation. These benefits were due to inhibition of biofilm-associated gene expression and delayed sporulation by ICE*Bs1*-containing cells, enabling them to exploit their neighbors and grow more prior to development. A single ICE*Bs1* gene, *devI* (formerly *ydcO*), was both necessary and sufficient for inhibition of development. Manipulation of host developmental programs allows ICE*Bs1* to increase host fitness, thereby increasing propagation of the element.

43 **Introduction**

44 Conjugative elements and phages are abundant mobile genetic elements in bacteria, capable
45 of transferring DNA between cells (Frost *et al*., 2005). Integrative and conjugative elements
46 (ICEs) appear to be the most widespread type of conjugative element (Guglielmini *et al.*, 2011).
47 ICEs are found integrated in a host genome. When activated, they excise and produce
48 conjugation machinery that transfers the element DNA from the host cell to recipients (Carraro
49 and Burrus, 2015; Johnson and Grossman, 2015; Wozniak and Waldor, 2010).

50 ICEs often carry "cargo" genes that are not necessary for transfer but confer a phenotype to
51 host cells. In fact, ICEs (conjugative transposons) were first identified because of the phenotypes
52 conferred by cargo genes (Franke and Clewell, 1981). Cargo genes include those encoding
53 antibiotic resistances, metabolic pathways, and determinants of pathogenesis and symbiosis
54 (Johnson and Grossman, 2015). Transfer of mobile elements between cells contributes to rapid
55 evolution and spread of associated cargo genes and phenotypes (Frost *et al*., 2005; Treangen and
56 Rocha, 2011).

57 Despite the benefits cargo genes can provide, the maintenance and transfer of mobile genetic
58 elements requires host cellular resources and in some cases is lethal (Baltrus, 2013).
59 Maintenance of a mobile genetic element in host cells requires balancing the costs and benefits
60 to the host or a sufficiently high transfer frequency. Many mobile elements, especially ICEs,
61 have been identified bioinformatically (Bi *et al*., 2012; Guglielmini *et al.*, 2011). Many of these
62 ICEs contain putative cargo genes. However, the phenotypes conferred by these genes cannot be
63 inferred from sequence nor are they easily detected experimentally (Cury *et al*., 2017).

64 ICE*Bs1*, a relatively small (~20 kb) ICE found in most strains of *Bacillus subtilis*, was
65 identified bioinformatically (Burrus *et al*., 2002) and experimentally based on its regulation by

66 cell-cell signaling (Auchtung *et al*., 2005). Most of the ICE*Bs1* genes needed for conjugation are
67 grouped together in an operon that is repressed until activating signals are sensed. Two pathways
68 activate ICE*Bs1*, both of which lead to cleavage of the repressor ImmR by the protease and anti-
69 repressor ImmA (Auchtung *et al*., 2007; Bose *et al*., 2008; Bose and Grossman, 2011). ICE*Bs1*
70 contains the cell-cell signaling genes, *rapI* and *phrI*, which regulate ICE*Bs1* activation by
71 sensing population density and the relative abundance of ICE*Bs1*-containing host cells
72 (Auchtung *et al*., 2005). RapI is produced at high cell density and during the transition to
73 stationary phase and stimulates the proteolytic cleavage of the repressor ImmR by the protease
74 ImmA (Bose and Grossman, 2011). Overproduction of RapI stimulates activation of ICE*Bs1* in
75 >90% of cells (Auchtung *et al*., 2005). RapI activity (and therefore ICE*Bs1* activation) is
76 inhibited by PhrI, a peptide that is secreted by cells that contain ICE*Bs1*. PhrI levels indicate the
77 relative abundance of ICE*Bs1*-containing cells in the population, preventing the activation and
78 possible redundant transfer of ICE*Bs1* if most nearby cells already contain the element. ICE*Bs1*
79 is also activated during the RecA-dependent DNA damage response (Auchtung *et al*., 2005).
80 Biofilms appear to be hotspots of horizontal gene transfer for bacteria growing in natural
81 settings (Madsen *et al*., 2012; Molin and Tolker-Nielsen, 2003). Undomesticated strains of *B.*
82 *subtilis* form complex biofilms on agar plates and at the air-liquid interface in standing cultures
83 (Vlamakis *et al*., 2013). There is also extensive spore formation in *B. subtilis* biofilms (Branda *et*
84 *al*., 2001; Vlamakis *et al*., 2008). In addition, during growth in a biofilm, ICE*Bs1* is naturally
85 activated and transfers efficiently, generating on the order of 10 new ICE*Bs1*-containing host
86 cells (transconjugants) per donor cell (Lécuyer *et al*. 2018). *B. subtilis* biofilms are held together
87 by a matrix composed of secreted exopolysaccharides, protein fibers, and DNA (Vlamakis *et al*.,
88 2013). This matrix reinforces cell-cell contacts, likely promoting rapid spread of ICE*Bs1* by

89 conjugation. Additionally, the conditions that promote biofilm formation (high cell density) also
90 promote activation and transfer of ICE*Bs1* and sporulation (Auchtung *et al*., 2005; Grossman and
91 Losick, 1988). Though biofilm growth is clearly beneficial to conjugation, it is unknown how
92 ICE*Bs1* impacts its host cells under these conditions.

93 In this study, we describe a selective advantage provided by ICE*Bs1* to its host cells during
94 growth in biofilms. This fitness benefit was due to inhibition of host biofilm and spore
95 development. We identified the ICE*Bs1* gene *devI* (formerly *ydcO*) as necessary and sufficient to
96 inhibit host development and provide a selective advantage to ICE*Bs1*-containing cells. We also
97 provide evidence indicating that *devI* inhibits the key developmental transcription factor Spo0A,
98 reducing its ability to stimulate biofilm and sporulation gene expression. *devI* (*ydcO*) is
99 conserved in other ICE*Bs1*-like elements, indicating that manipulation of host development may
100 be a conserved strategy among this family of mobile genetic elements. We postulate that
101 manipulation of host pathways may be a common function of many of the as yet uncharacterized
102 cargo genes in ICEs.
103

104 **Results**

105 **ICE*Bs1* spreads efficiently in biofilms by conjugation**

106 Biofilm formation is characteristic of many bacteria growing in natural settings, including *B.*
107 *subtilis*. We used biofilm growth to determine if ICE*Bs1* affected the fitness of its host cells
108 under conditions that naturally promote its spread. We performed competition experiments in
109 biofilms using strains of undomesticated *B. subtilis* (NCIB3610 plasmid-free) with or without
110 ICE*Bs1*.

111 We observed highly efficient spread of ICE*Bs1* at low donor to recipient ratios (Table 1)
112 during growth in biofilms, similar to results reported previously (Lécuyer *et al*., 2018). To
113 measure mating, we mixed ICE*Bs1*-containing cells (potential donors) with cells that did not
114 contain ICE*Bs1* (ICE*Bs1*^{0}, potential recipients) and co-cultured the mix on standard biofilm-
115 stimulating growth medium (MSgg agar) (Branda *et al*., 2001). Since ICE*Bs1* induction is
116 regulated by cell-cell signaling, we varied the initial frequency of ICE*Bs1*+ cells between
117 approximately 0.01 and 0.9. We inserted unique selectable markers (antibiotic resistances) in the
118 chromosomes of the donors and recipients as well as within ICE*Bs1*. After four days of growth at
119 30°C (approximately 17 net doublings of the initial population), biofilms were disrupted and the
120 number of transconjugants was determined by selective plating.
121 We found that after four days of biofilm growth, the frequency of transconjugants ranged
122 from ~0.4 – 0.6 of total cells in the biofilm for starting donor frequencies of ~0.01 – 0.5 (Table
123 1). The highest frequency of transconjugants was observed when the starting frequency of
124 ICE*Bs1*-containing cells was ~0.1. Enhanced conjugation at low donor to recipient ratios is
125 likely due to regulation of ICE*Bs1* by cell-cell signaling (induction is inhibited by the presence
126 of other potential donors) and the higher likelihood of contacting potential recipients at low
127 frequencies of donors.
128

Table 1: Frequency of transconjugants generated in biofilm matings

Initial frequency ICE*Bs1* donors[1]	Final frequency transconjugants[2]
0.008 ± 0.002	0.42 ± 0.13
0.10 ± 0.03	0.64 ± 0.15
0.47 ± 0.05	0.44 ± 0.07
0.89 ± 0.03	0.063 ± 0.008

[1] ICE*Bs1*-containing cells (JMJ592) were mixed with ICE*Bs1*-cured cells (JMJ550). The initial frequencies reported are the average ± standard deviation from three independent experiments.
[2] The final frequencies of transconjugants reported are the average ± standard deviation from a total of 9 biofilms from 3 independent experiments.

129

130 The high levels of ICE*Bs1* conjugation during growth in biofilms presented a challenge for
131 quantifying the fitness of ICE*Bs1*-containing host cells relative to ICE*Bs1*^{0} cells. Mating
132 converts a large fraction of ICE*Bs1*^{0} cells to transconjugants (ICE*Bs1*-containing), reducing the
133 ICE*Bs1*^{0} proportion of the population in a manner unrelated to host fitness. To measure the effect
134 of ICE*Bs1* on host fitness, we blocked conjugative DNA transfer using the *conEK476E* mutation
135 (Berkmen *et al*., 2010). We then compared the proportion of ICE*Bs1*-containing hosts to
136 ICE*Bs1*^{0} cells without the confounding influence of conjugation.

137 **ICE*Bs1* provides a frequency-dependent selective advantage in biofilms**

138 We found that cells containing ICE*Bs1* that is incapable of conjugation
139 {ICE*Bs1*(*conEK476E*)} had a fitness advantage over cells lacking ICE*Bs1* during biofilm growth
140 when they were initially present as a minority of the population. As before, we varied the initial
141 frequency of ICE*Bs1*-containing host cells in the inoculum between approximately 0.01 and 0.9.
142 To measure fitness we determined the frequency of ICE*Bs1*-containing cells (f_{ICE}) and ICE*Bs1*^{0}
143 (f_{NULL}) cells in the initial inoculum and in mature biofilms (4 days of growth at 30ºC) by
144 selective plating. The relative fitness of the ICE*Bs1*-containing cells was calculated as the fold
145 change in the ratio of f_{ICE} / f_{NULL} over the course of the competition.

146 We found that the fitness of ICE*Bs1*-containing cells was dependent on their initial frequency
147 in the population (Fig. 1A). The frequency-dependence was most likely due to regulation of
148 ICE*Bs1* gene expression by the cell-cell signaling genes *rapI-phrI* or some other function of
149 *rapI*. Cells with ICE*Bs1* had a selective advantage at low frequencies (0.01 or 0.1) when the

150 element is most strongly activated. At high frequencies in the population (0.5 or 0.9), when there
151 is little or no activation, fitness of ICE*Bs1*-containing cells was approximately neutral (Fig. 1A).
152 The final growth yields of the populations were similar regardless of the frequency of ICE*Bs1*-
153 containing cells (Fig. 1C).

154 We performed control competitions of two differentially marked ICE*Bs1*^{0} strains to verify
155 that the enhanced fitness we observed was due to the presence of ICE*Bs1* rather than an inherent
156 fitness difference associated with antibiotic resistances (see Methods and Materials). There was a
157 small cost associated with the marker used to select cells containing ICE*Bs1* (relative fitness 0.7
158 ±0.09), leading to a slight underestimate of the selective advantage to these cells.

159 There is a large amount of sporulation in *B. subtilis* biofilms (Branda *et al*., 2001; Vlamakis
160 *et al*., 2008). Consistent with this, we found that approximately 80% of viable colony-forming
161 units (CFUs) in a mature biofilm after 3 days were from spores. The selective advantage to cells
162 containing ICE*Bs1* growing in biofilms could be due to sporulation and/or biofilm development.
163

164

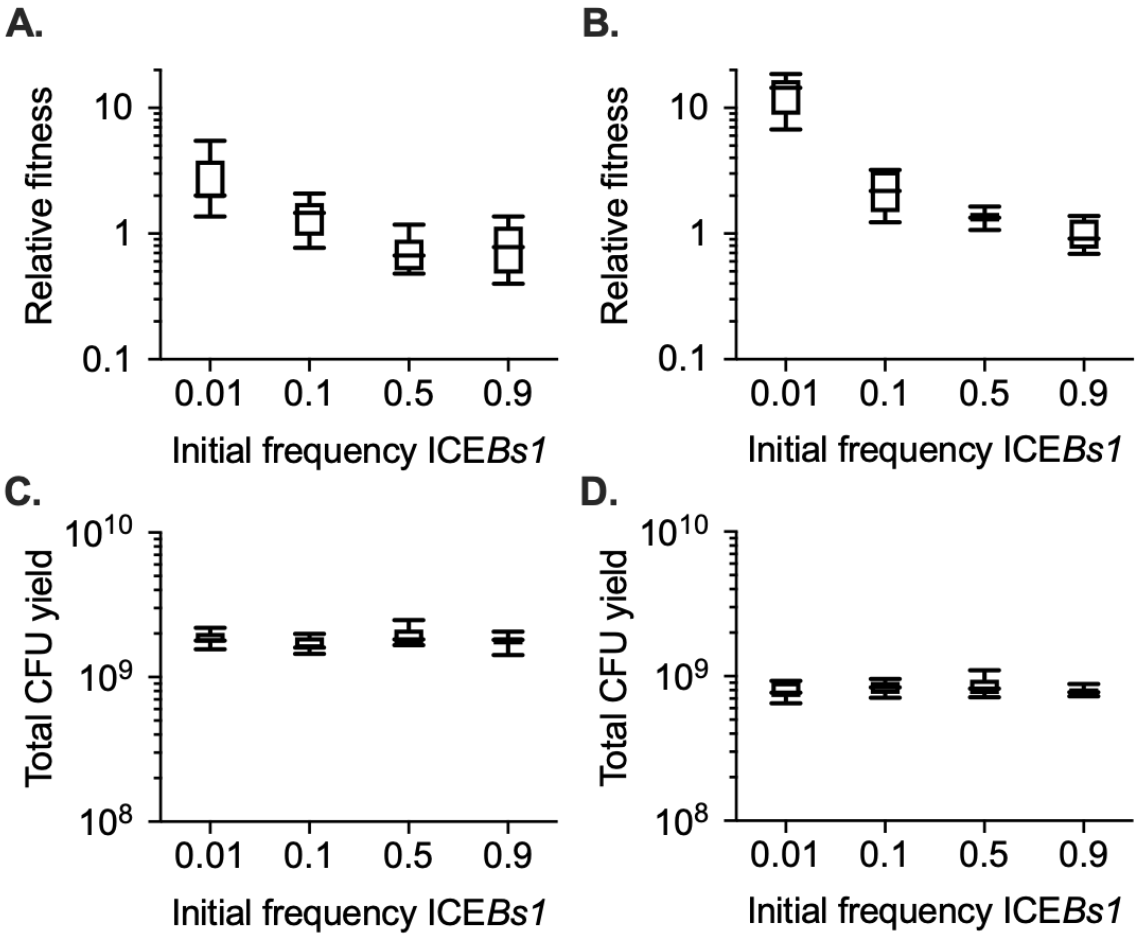

Figure 1. The fitness of ICE*Bs1*-containing cells during development depends on their initial frequency in the population. The fitness of ICE*Bs1*-containing cells (JMJ593) relative to ICE*Bs1*-cured cells (JMJ550) was measured by competition during biofilm growth (A) or growth on sporulation medium without biofilm formation (B). The total growth yields in biofilms (C) and on sporulation medium (D) were determined by counting CFUs derived from both cells and spores. Data shown are pooled from 3 independent experiments. A total of 9 populations were analyzed per initial frequency. Boxes extend from the lower to upper quartiles of the data, and the middle line indicates the median fitness. Whiskers indicate the range of the fitness measurements.

165 **ICE*Bs1* confers a selective advantage in biofilms without sporulation**

166 We blocked sporulation using a mutation that causes a reduction in the amount of the
167 transcription factor Spo0A that is required for spore formation. The *spo0A*Δ*Ps* mutation is a
168 deletion of the sigma-H-dependent promoter upstream of *spo0A* (Siranosian and Grossman,
169 1994). This mutation reduces production of Spo0A, and cells do not achieve the threshold
170 concentration required to initiate sporulation (Chung *et al*., 1994). *spo0A*Δ*Ps* mutant cells
171 formed biofilms that were morphologically similar to those formed by wild type cells.

172 In biofilms without sporulation, *spo0A*Δ*Ps* mutant cells containing ICE*Bs1* (JMJ788) had a
173 selective advantage compared to *spo0A*Δ*Ps* mutant cells without ICE*Bs1* (JMJ786). Notably, the
174 median fitness for *spo0A*Δ*Ps* mutant cells containing ICE*Bs1* at a low frequency in the
175 population was approximately six. Thus, sporulation was not required for a fitness benefit to
176 ICE*Bs1*-containing cells in biofilms.

177 Fitness of cells in biofilms can be affected by production of the biofilm matrix. For example,
178 cells that "cheat" by contributing less to biofilm matrix production reap the benefits of growing
179 with other cells that bear the cost of matrix gene expression (Dragoš *et al*., 2018). We showed
180 that cells containing ICE*Bs1* "cheat" by decreasing expression of biofilm matrix genes compared
181 to cells without ICE*Bs1* (see below).

182 **ICE*Bs1* confers a selective advantage during sporulation, in the absence of biofilms**

183 We found that cells containing ICE*Bs1* also had a frequency-dependent selective advantage
184 during sporulation, in the absence of biofilms. We prepared mixtures of cells with and without
185 ICE*Bs1* as described above. These mixtures were spotted onto a medium (DSM agar) that
186 promotes high levels of sporulation. During growth on this medium, there are no complex colony
187 features found in biofilms. As in the biofilm competitions, cells containing ICE*Bs1* had a

188 frequency-dependent selective advantage during sporulation (Fig. 1B). At an initial frequency of
189 approximately 0.01 the median relative fitness of the ICE*Bs1*-containing cells was approximately
190 14 (14.5 ± 4.3). As in biofilms, the total growth yields of the populations were similar regardless
191 of ICE*Bs1* host frequency (Fig. 1D). These results demonstrate that ICE*Bs1* confers a selective
192 advantage to cells growing on DSM agar, outside the context of biofilms. This could be due to
193 sporulation or growth under these specific conditions.

194 We found that sporulation was required for the strong selective advantage during growth on
195 sporulation medium (DSM agar). The fitness benefit associated with the ICE*Bs1*-containing cells
196 at a low frequency in the population was greatly reduced in the *spo0A*Δ*Ps* mutant (no
197 sporulation). The sporulation mutant with ICE*Bs1* had a median fitness of approximately 1.5
198 compared to approximately 9 for wild-type. Based on these results, we conclude that the
199 presence of ICE*Bs1* confers a frequency-dependent selective advantage during sporulation.

200 Together, our results demonstrate that cells containing ICE*Bs1* have a frequency-dependent
201 selective advantage in biofilms and during sporulation. This selective advantage is independent
202 of the ability of ICE*Bs1* to actually transfer from one cell to another. Biofilm formation (Hamon
203 and Lazazzera, 2001) and sporulation (Hoch, 1993; Sonenshein, 2000) are both regulated by the
204 transcription factor Spo0A. Our results indicate that the presence of ICE*Bs1* could somehow be
205 inhibiting the activity or activation of Spo0A.

206 **ICE*Bs1*-containing cells have a frequency-dependent delay in sporulation**

207 We hypothesized that some ICE*Bs1*-encoded gene(s) inhibit host cell development. This
208 inhibition could delay development and enable cells to continue growth for a small number of
209 generations. This model derives from analogous phenotypes of mutants that do not enter the
210 sporulation pathway (Dawes and Mandelstam, 1970). Mutants that delay the start of sporulation

211 have a growth advantage as they are able to divide one or a few more times while other cells in
212 the population stop growing and start to sporulate.

213 We found that in mixed populations, sporulation was delayed in cells containing ICE*Bs1*
214 compared to cells without ICE*Bs1*, in a frequency-dependent manner. As above, we used an
215 ICE*Bs1* mutant that is incapable of conjugation {ICE*Bs1*(*conEK476E*)}. We started several
216 replicate populations, each of which we sampled once at different times to create a time-course.
217 {This was done because sampling to quantify CFUs (spores and cells) disrupts and prevents
218 monitoring a single population over time.} Spore frequency was determined by measuring heat-
219 resistant CFUs as a fraction of total CFUs for ICE*Bs1*-containing and ICE*Bs1*-cured strains that
220 contained different antibiotic resistance markers to distinguish the strains.

221 <u>Sporulation is delayed in ICE*Bs1* host cells during biofilm formation.</u> We found that
222 sporulation of ICE*Bs1*-containing cells was delayed in a frequency-dependent manner during
223 growth in biofilms (Fig. 2A, 2B). When ICE*Bs1*-containing cells were started at a frequency of
224 approximately 0.01, they reached their maximum sporulation frequency (>80% spores) roughly
225 17 hours later than the cells without ICE*Bs1* (Fig. 2A). After three days of biofilm growth, the
226 sporulation frequencies of ICE*Bs1*-containing and ICE*Bs1*-cured cells were indistinguishable.
227 Over this period of time the total frequency of ICE*Bs1*-containing cells in the population
228 typically rose from ~0.01 to ~0.03, giving a relative fitness (~3) consistent with results above
229 (Fig. 1A). When the ICE*Bs1*-containing cells were the majority in the population (initial
230 frequency ~0.9) the timing and sporulation frequencies of the ICE*Bs1*-containing and ICE*Bs1*-
231 cured cells were indistinguishable (Fig. 2B).

232

233

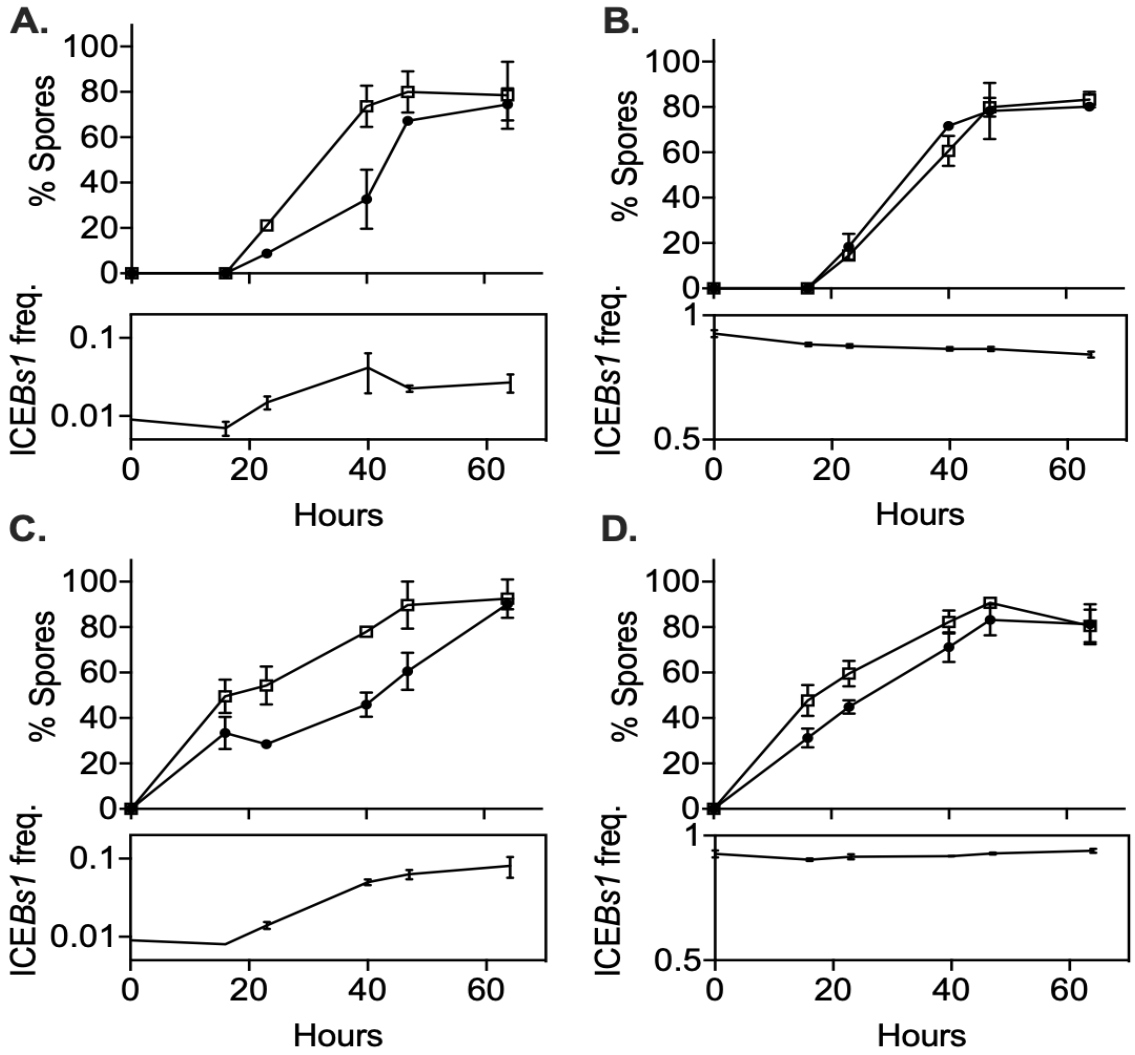

Figure 2. ICE*Bs1*-containing cells delay sporulation in a frequency-dependent manner. ICE*Bs1*-containing cells (JMJ593, black circles) were mixed with ICE*Bs1*-cured cells (JMJ550, open squares) at an initial frequency of 0.01 and spotted onto biofilm growth medium (A) or sporulation medium (C). Mixtures with ICE*Bs1*-containing cells at an initial frequency of 0.9 were also spotted onto biofilm medium (B) and sporulation medium (D). Biofilms and colonies were harvested at the indicated times to determine the fraction of CFUs derived from heat-resistant spores for both the ICE*Bs1*-containing and the ICE*Bs1*-cured cells. Boxes below each graph indicate the frequency of ICE*Bs1*-containing CFUs at each timepoint. Data shown are the average from two populations per timepoint with error bars indicating the standard deviation. A representative experiment is shown.

234 Sporulation is delayed in ICE*Bs1* host cells during sporulation in the absence of biofilms.
235 We also found that sporulation of ICE*Bs1*-containing cells was delayed in a frequency-dependent
236 manner during sporulation in the absence of biofilm formation (Fig. 2C, 2D). When the ICE*Bs1*
237 containing cells were inoculated at a low frequency (approximately 0.01), the delay in
238 sporulation was qualitatively similar to that observed in biofilms (Fig. 2C). However, the
239 increase in the total frequency of ICE*Bs1*-containing cells in the population was approximately
240 10-fold, giving a relative fitness of approximately 10, consistent with results described above
241 (Fig. 1B). This increase was much greater than the approximately 3-fold increase during biofilm
242 formation.

243 We suspect that the stronger selective advantage of ICE*Bs1*-containing cells on sporulation
244 medium is due to the earlier onset of sporulation. By 16 hours of growth on sporulation medium,
245 spores made up about 40% of the total CFUs. By the same time in biofilms spores were
246 undetectable (limit of detection ~0.03% spores).

247 ***rapI-phrI* are necessary but not sufficient for enhanced fitness**

248 The fitness benefits provided by ICE*Bs1* were dependent on the relative abundance of
249 ICE*Bs1*-containing cells, indicating that the cell-cell signaling genes *rapI-phrI* in ICE*Bs1* were
250 likely involved, either directly or indirectly. Other Rap proteins in *B. subtilis* are known to
251 regulate development by inhibiting phosphorylation (activation) of the transcription factor
252 Spo0A (Sonenshein, 2000). RapI, like other Rap proteins in *B. subtilis*, can inhibit the pathway
253 needed to phosphorylate (activate) the transcription factor Spo0A, and overexpression of *rapI* in
254 vivo inhibits sporulation (Parashar *et al*., 2013, Singh *et al.,* 2013). However, it was unknown
255 whether RapI regulates development in vivo under physiological conditions. Results described
256 below demonstrate that the *rapI-phrI* system is required for the fitness advantage of ICE*Bs1*-

257 containing cells, but that this requirement is by virtue of causing induction of ICE*Bs1* gene
258 expression. Another gene in ICE*Bs1* is both necessary and sufficient for the selective advantage
259 of ICE*Bs1*-containing cells during development.

260 <u>*rapI-phrI* are required for the fitness benefit of cells containing ICE*Bs1*.</u> We deleted *rapI-*
261 *phrI* (Δ*rapI-phrI*) in ICE*Bs1* and compared the fitness conferred by this mutant to that conferred
262 by ICE*Bs1* with *rapI-phrI*. Because loss of *rapI* prevents induction of gene expression, excision,
263 and replication of ICE*Bs1*, we used ICE*Bs1* mutants ('locked-in') that are incapable of excision
264 or replication (see Methods and Materials), regardless of the presence or absence of *rapI*.
265 Preventing excision and replication of ICE*Bs1* allowed us to compare the fitness of wild-type
266 ICE*Bs1* to ICE*Bs1* Δ*rapI-phrI* (and other mutants), which would otherwise have a lower gene
267 copy number due to a lower frequency of induction.

268 We verified that locked-in ICE*Bs1* still conferred a fitness benefit to host cells. During
269 sporulation in biofilms (MSgg agar), cells containing locked-in ICE*Bs1* had a relative fitness of
270 approximately 14 when they were started at a low frequency in the population (~0.01) (Fig. 3A).
271 This benefit was much greater than that conferred by wild-type ICE*Bs1* that can excise and
272 replicate. We suspect that replication of ICE*Bs1* incurs a fitness cost to the host cell that reduces
273 the apparent benefit. The sources of this burden could include use of host resources, the host's
274 response to single-stranded DNA produced by rolling-circle-replication of ICE*Bs1*, and increases
275 in ICE*Bs1* gene expression due to increased copy number.

276 We found that *rapI-phrI* were required for the fitness benefit conferred by ICE*Bs1*. During
277 sporulation in biofilms (MSgg agar), the relative fitness of the Δ(*rapI-phrI*) host strain was
278 approximately neutral (Fig. 3A), in contrast to the high fitness (median ~14) provided by ICE*Bs1*
279 containing *rapI-phrI* when the ICE*Bs1*-containing cells were started at a low frequency (~0.01).

280

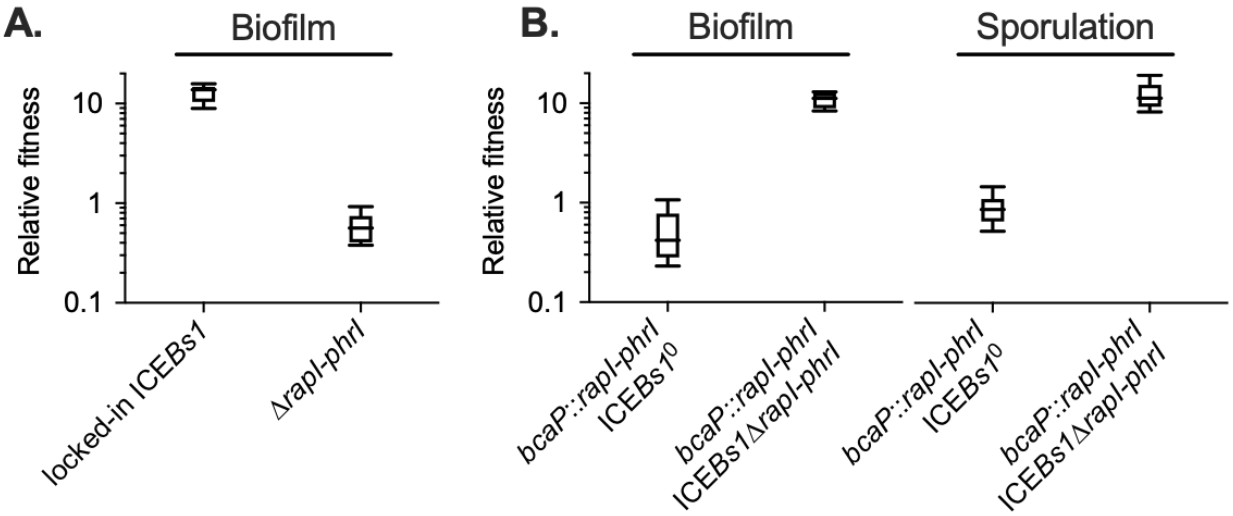

Figure 3. The ICE*Bs1* cell-cell signaling genes, *rapI-phrI*, are necessary but not sufficient to confer a selective advantage. (A) The fitness of cells containing locked-in ICE*Bs1* (JMJ646) or an isogenic *rapI-phrI* mutant (JMJ686) was measured relative to ICE*Bs1*-cured cells (JMJ550) during biofilm competitions. The ICE*Bs1*-containing cells were started at a frequency of 0.01. (B) The fitness of cells containing *rapI-phrI* alone (JMJ576) or cells containing both *rapI-phrI* and locked-in ICE*Bs1*Δ*rapI-phrI* (JMJ785) was measured relative to ICE*Bs1*-cured cells (JMJ714) during biofilm and sporulation medium competitions. JMJ576 and JMJ785 were started at a frequency of 0.01. Data shown are pooled from 3 independent experiments with a total of 9 populations analyzed per strain mixture. Boxes extend from the lower to upper quartiles, and the middle line indicates the median fitness. Whiskers indicate the range of the fitness measurements.

281 The requirement for *rapI-phrI* could be due to a direct role for one of these, likely RapI, or an
282 indirect role in activating expression of ICE genes.

283 *rapI-phrI* are not sufficient in the absence of other ICE*Bs1* genes to provide a fitness benefit.
284 We found that *rapI-phrI* alone were not sufficient to provide a fitness benefit during sporulation
285 or during sporulation in biofilms. We cloned *rapI-phrI* and their native promoters and inserted
286 them in an ectopic locus (*bcaP*) in a strain that did not contain ICE*Bs1*. When this strain was
287 started at a low frequency (~0.01), fitness of this strain was neutral relative to a control strain
288 without *rapI-phrI* (Fig. 3B). To verify that *rapI-phrI* were functional, we added back ICE*Bs1*
289 that was missing *rapI-phrI*. Adding the rest of ICE*Bs1* restored the fitness advantage during
290 sporulation and in biofilms, indicating that the ectopic copy of *rapI-phrI* was functional (Fig.
291 3B). The requirement for *rapI-phrI* and some other ICE*Bs1* gene(s) indicated that the selective
292 advantage was likely dependent on induction of ICE*Bs1* by RapI.

293 Activation of ICE*Bs1* is required for the fitness benefit. We found that expression of one or
294 more ICE*Bs1* genes controlled by the promoter P*xis* was required for the selective advantage in
295 biofilms with sporulation. P*xis* drives most of the genes in ICE*Bs1* and is indirectly activated by
296 RapI in a frequency-dependent manner (Auchtung *et al*., 2005; Bose and Grossman, 2011). We
297 deleted P*xis* in a strain in which ICE*Bs1* was unable to excise or replicate (locked-in-ICE*Bs1*). In
298 this strain, only genes not dependent on P*xis* could be expressed, including *rapI-phrI*. Fitness of
299 this strain was approximately neutral during sporulation in biofilms (Fig. 4B). This indicated that
300 expression of one or more genes controlled by P*xis*, either alone or in combination with *rapI*,
301 was required for the fitness benefit conferred by ICE*Bs1*.

302 Since most of the genes controlled by P*xis* have known roles in the conjugative life cycle, we
303 focused our search on genes without a known function, starting with the genes near P*xis*. Of

304 these, we found that a deletion of *devI* (*ydcO*) reduced fitness. Results described below
305 demonstrate that a single ICE*Bs1* gene, *devI* (*ydcO*), is both necessary and sufficient to inhibit
306 development and provide a selective advantage. The primary role of *rapI* in the fitness benefit
307 appears to be the induction of *devI* expression.

308 ***devI* is necessary for the fitness benefit conferred by ICE*Bs1***

309 We found that an ICE*Bs1* gene of unknown function, *devI* (*ydcO*), was necessary for the
310 fitness advantage of ICE*Bs1* host cells. We constructed a deletion of *devI* in the locked-in-
311 ICE*Bs1* strain. When started at a low frequency in the population (~0.01) the relative fitness of
312 the *devI* mutant was approximately 3.5 (Fig. 4D), much less than that of the isogenic *devI*+ cells
313 (median fitness ~14) in biofilms with sporulation (Fig. 4A). Interestingly, the deletion of *devI* did
314 not reduce fitness fully to neutral, indicating a possible role for other ICE*Bs1* genes.

315 *devI* (*ydcO*) is predicted to encode an 86 amino acid protein. A search for conserved motifs
316 and structural similarity between DevI (YdcO) and other proteins did not significantly inform
317 our understanding of DevI function. However, *devI* (*ydcO*) homologs are found in other *Bacillus*
318 species (see below).

319 ***devI* is sufficient to inhibit sporulation and provide a fitness benefit**

320 We found that when expressed constitutively, *devI* alone, in the absence of all other ICE*Bs1*
321 genes, was sufficient to inhibit sporulation and provide a selective advantage. We cloned *devI*
322 under the control of P*xis* at an ectopic locus (*lacA*) in a strain without ICE*Bs1*. In the absence of
323 ICE*Bs1* (and its repressor ImmR), P*xis* is constitutively active (Auchtung *et al*., 2007). Fitness
324 was measured relative to a control strain that had P*xis* with no gene downstream.

325

326

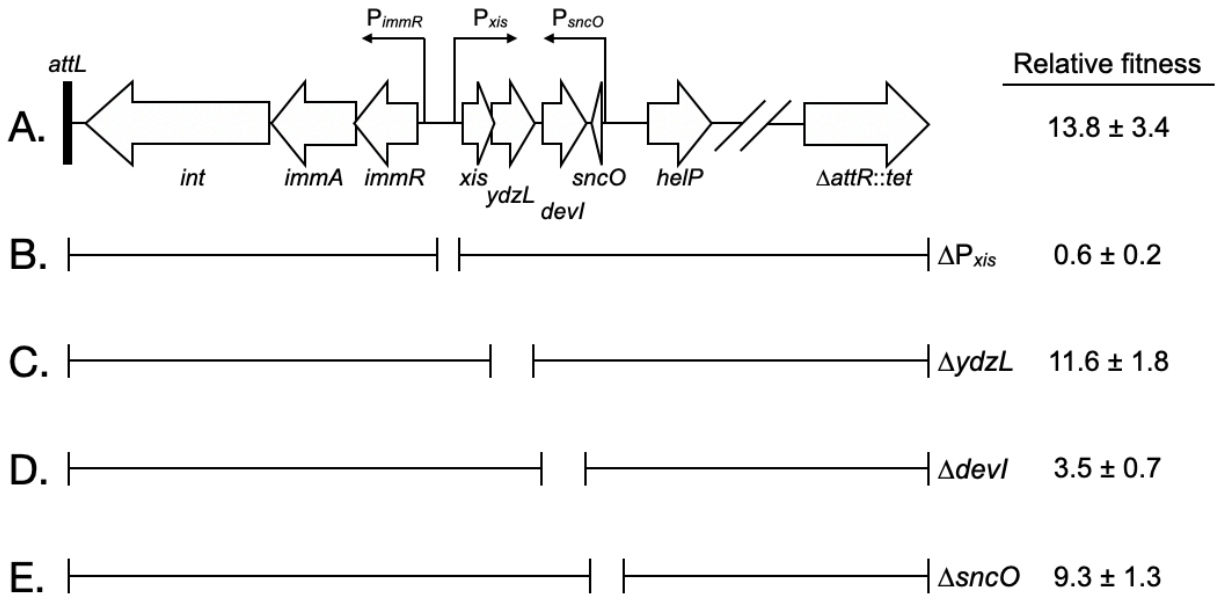

Figure 4. Effects of deletions in ICE*Bs1* on host fitness. (A) Abbreviated genetic map of locked-in-ICE*Bs1* showing genes as open block arrows, promoters as thin right-angle arrows, and the left attachment site (*attL*) as a black bar. (B to E) Brackets under the map of ICE*Bs1* indicate regions contained in isogenic derivatives of locked-in-ICE*Bs1*. Open spaces represent regions deleted. The fitness of strains containing locked-in-ICE*Bs1* (JMJ646) and its derivatives (ΔP*xis*, JMJ662; Δ*ydzL*, JMJ704; Δ*devI*, JMJ703; Δ*sncO*, JMJ688) is indicated at the right. Fitness was measured relative to ICE*Bs1*-cured cells (JMJ550) during competitions in biofilms. ICE*Bs1*-containing cells were started at a frequency of 0.01. Data shown are the median ± standard deviation from at least 3 independent experiments (at least 9 total competitions per strain mixture), with the exception of JMJ688 which was measured only in 1 experiment (3 total competitions).

327 Sporulation of the P*xis-devI* strain was strongly inhibited under conditions that normally
328 support robust sporulation, including in biofilms (Fig. 5). During sporulation either with (Fig.
329 5A) or without biofilm formation (Fig. 5B), the frequency of the P*xis-devI* strain in the
330 population rose from ~0.01 to ~0.05, giving a relative fitness of ~5. This is greater than the
331 typical fitness conferred by ICE*Bs1* in biofilms, but less than that observed during sporulation
332 without biofilms. We suspect these differences are due to constitutive expression of *devI* in the
333 absence of ICE*Bs1*'s regulatory systems and the earlier onset of starvation on DSM agar
334 compared to MSgg agar; cells that are unable to sporulate eventually die.

335 **DevI likely targets the developmental transcription factor Spo0A**

336 Results described above demonstrated that *devI* is a robust inhibitor of sporulation.
337 Sporulation is controlled by the transcription factor Spo0A {reviewed in (Hoch, 1993;
338 Sonenshein, 2000)}, which both directly and indirectly regulates the expression of many genes
339 needed for development, including biofilm formation (Hamon and Lazazzera, 2001). The results
340 described below indicate that DevI most likely targets Spo0A.

341 <u>*devI* inhibits early sporulation gene expression.</u> We found that *devI* inhibits expression of
342 genes normally activated early during sporulation. Sporulation is initiated when Spo0A~P
343 directly stimulates transcription of several genes, including the three sporulation operons, *spoIIA,*
344 *spoIIE,* and *spoIIG* (Sonenshein, 2000). Using *lacZ* fusions to the promoters of each of these
345 operons, we found that P*xis-devI* inhibited activity of each promoter compared to wild-type
346 during sporulation in liquid sporulation medium (Fig. 6A). This indicates that DevI inhibits the
347 initiation of sporulation.

348 <u>*devI* inhibits biofilm gene expression.</u> We also found that *devI* inhibits expression of genes
349 needed for extracellular matrix production during biofilm formation. We measured expression of

350

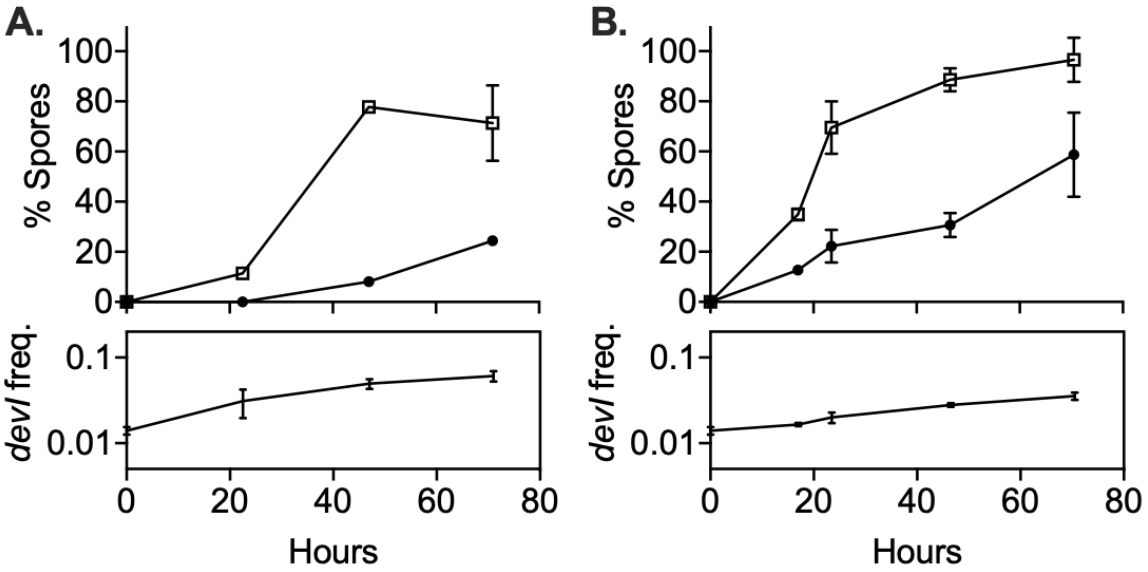

Figure 5. *devI* alone is sufficient to inhibit sporulation and provide a selective advantage. ICE*Bs1*-cured cells that constitutively express *devI* (JMJ725, black circles) were mixed at an initial frequency of 0.01 with ICE*Bs1*-cured cells containing an empty expression construct (JMJ727, open squares). The mixture was spotted onto biofilm growth medium (A) or sporulation medium (B). Biofilms and colonies were harvested at the indicated times to determine the fraction of CFUs derived from heat-resistant spores for both the *devI*-containing and control cells. Boxes below each graph indicate the frequency of *devI*-containing CFUs at each timepoint. Data shown are the average from two populations per timepoint with error bars indicating the standard deviation.

351 biofilm matrix genes *epsB* and *tasA* by RT-qPCR with primers internal to each gene. In early
352 stationary phase in liquid biofilm medium, transcript levels of *epsB* and *tasA* were reduced by
353 about 5-fold and 3-fold, respectively, in the P*xis*-*devI* strain compared to wild-type (Fig. 6B). We
354 suspect that inhibition of biofilm matrix genes, in addition to delaying sporulation, is an
355 important mechanism of selection for ICE*Bs1* host cells during growth in a biofilm. This is
356 consistent with the selective advantage of ICE*Bs1* host cells in biofilms without sporulation
357 described earlier. Inhibition of biofilm and early sporulation genes is consistent with DevI
358 functioning as an inhibitor of Spo0A or its activation by phosphorylation.

359 ***devI* is conserved among ICEs homologous to ICE*Bs1***

360 We found that *devI* (*ydcO*) is conserved among *Bacillus* species and in many cases is located
361 within what appear to be ICEs similar to ICE*Bs1*. We used NCBI BLAST to search for
362 homologous protein sequences using both pBLAST (protein database) and tBLASTn (translated
363 nucleotide database). Homologs with 100% sequence coverage and greater than 70% identity to
364 YdcO from *B. subtilis* NCIB3610 were found in dozens of other *B. subtilis* strains and in closely
365 related species including *B. licheniformis, B. atrophaeus,* and *B. amyloliquefaciens*. Excluding
366 *Bacillus* species from the searches to possibly identify more distantly related proteins with
367 known functions produced no hits.

368 We analyzed the sequence surrounding the *devI* (*ydcO*) homologs identified to determine if
369 there is similarity to ICE*Bs1*. All of the *devI* (*ydcO*) homologs appear to be within mobile
370 element regions similar to ICE*Bs1*, though some are clearly missing genes present in ICE*Bs1*.
371 Although we cannot infer whether any of these regions are functional mobile elements, we
372 suspect that the ability to inhibit host development may be a conserved strategy among ICE*Bs1*-
373 like elements and possibly other ICEs with cargo genes of unknown function.

374

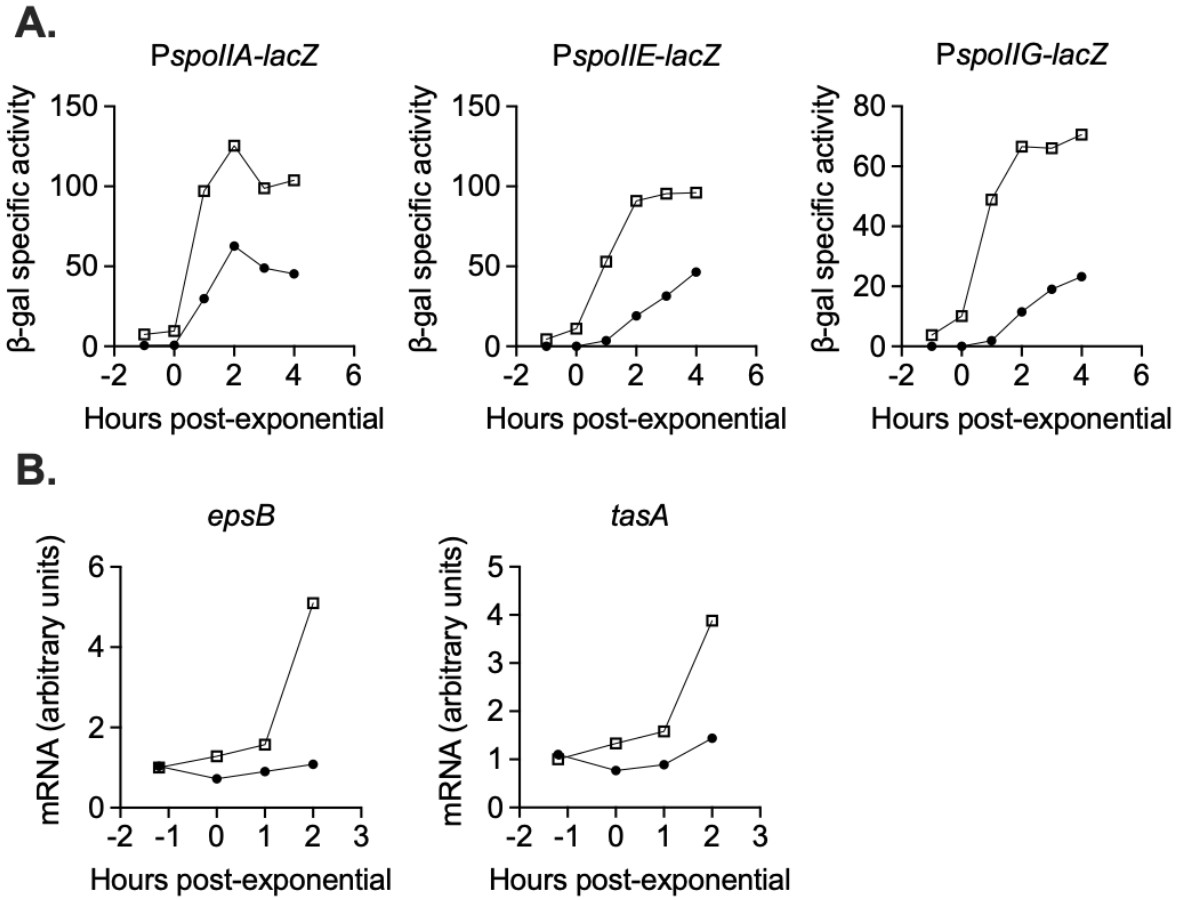

Figure 6. *devI* inhibits expression of genes associated with sporulation initiation and biofilm formation. (A) ICE*Bs1*-cured cells that constitutively express *devI* (black circles) or contain an empty expression construct (open squares) were grown in liquid sporulation medium. Cells were harvested at the indicated times and β-galactosidase specific activity was measured. Strains: P*spoIIA-lacZ* P*xis-devI* (JMJ732), P*spoIIA-lacZ* WT (JMJ735), P*spoIIE-lacZ* P*xis-devI* (JMJ731), P*spoIIE-lacZ* WT (JMJ734), P*spoIIG-lacZ* P*xis-devI* (JMJ733), P*spoIIG-lacZ* WT (JMJ736). A representative experiment is shown. (B) ICE*Bs1*-cured cells that constitutively express *devI* (JMJ725, black circles) and ICE*Bs1*-cured cells containing an empty expression construct (JMJ727, open squares) were grown in liquid biofilm medium, and cells were harvested at the indicated times. cDNA was synthesized using reverse transcriptase and RT-qPCR was used to measure expression of biofilm-associated genes *epsB* and *tasA*. The transcript copy numbers of these genes were measured relative to a housekeeping gene *gyrA*. The data reported are the average of three technical replicates from one experiment. The relative expression levels are normalized to wild-type at T_{-1}. A representative experiment is shown.

375 **Discussion**

376 Our work demonstrates that ICE*Bs1* confers a selective advantage on its host cells by
377 delaying biofilm and spore development, enabling the host to grow more than cells without
378 ICE*Bs1*. When ICE*Bs1*-containing cells are the minority in a mixed population, ICE*Bs1* genes
379 are induced. One of these genes, *devI*, is necessary and sufficient to inhibit biofilm- and
380 sporulation-associated gene expression, likely by inhibiting the key developmental regulator
381 Spo0A. Together with previous findings we conclude that ICE*Bs1* encodes at least three distinct
382 strategies to benefit its host cells. 1) Inhibition of development (described here) provides a
383 growth advantage in biofilms and during sporulation. 2) Exclusion, mediated by *yddJ*, blocks the
384 conjugation machinery and protects the host cell from lethal excessive transfer (Avello *et al*.,
385 2019). 3) An abortive infection mechanism, mediated by *spbK* (*yddK*) protects populations of
386 ICE*Bs1* host cells from predation by the lysogenic phage SPβ (Johnson *et al*., 2020). We propose
387 that all three strategies provide a competitive advantage for ICE*Bs1* and its host cells in different
388 conditions.

389 Expression of *devI* reduces biofilm matrix expression and delays the initiation of sporulation.
390 Production of the biofilm matrix is a public good, benefiting the whole community (Dragoš *et*
391 *al*., 2018). Avoidance of matrix production can therefore be considered an exploitative behavior.
392 Exploitation can be detrimental to the population as a whole (Smith and Schuster, 2019), but we
393 did not observe any negative effects on populations under conditions where ICE*Bs1* host cells
394 had an advantage. This is in agreement with the facultative nature of ICE*Bs1* cheating (Even-Tov
395 *et al*., 2016; Pollak *et al*., 2016). Quorum-sensing by *rapI-phrI* ensures that ICE*Bs1* cheats only
396 as a minority, where its impact on total public goods levels is negligible. Interestingly, the pBS32
397 plasmid utilizes direct regulation of biofilm formation by a Rap receptor to its benefit (Bendori *et*

398 *al*., 2015; Pollak *et al*., 2015), while in ICE*Bs1* this regulation was moved from the Rap receptor
399 to one of its regulated genes.

400 The fitness consequences of sporulation inhibition are complicated (Mutlu *et al*., 2018).
401 Delaying sporulation too long would result in a loss of viability of the starved cells. Inhibition of
402 sporulation by ICE*Bs1* appears to be transient; ICE*Bs1* host cells eventually sporulate and do not
403 lose significant viability as a consequence of delaying sporulation. Regulation of *devI* expression
404 by cell-cell signaling is likely critical for transient developmental inhibition.

405 **ICE*Bs1* stability during sporulation**

406 We hypothesize that in addition to providing a fitness advantage to its host cell, delaying
407 sporulation may also improve stability of ICE*Bs1* in the host during development. Sporulation
408 involves the formation of an asymmetric division septum generating the larger mother cell and
409 the smaller forespore (Errington, 2001; Higgins and Dworkin, 2012). Sporulation is induced
410 when cells are at a high population density and running out of nutrients, conditions that also
411 activate ICE*Bs1* (Auchtung *et al*., 2005; Grossman and Losick, 1988). The plasmid form of
412 ICE*Bs1* that is generated after excision from the chromosome is not known to have a mechanism
413 for active partitioning and is more likely to remain in the larger mother cell if the cells do enter
414 the sporulation pathway and divide asymmetrically. Therefore, the ability of ICE*Bs1* to delay the
415 initiation of sporulation under conditions where the element is activated could help prevent loss
416 of the element and maintain ICE*Bs1* in host cells.

417 Mobile genetic elements employ various strategies to promote their maintenance during
418 sporulation. Rates of curing during sporulation for various plasmids in *Bacillus* species vary
419 widely and do not necessarily correlate with their stability during normal cell division (Tokuda *et*
420 *al*., 1993; Turgeon *et al*., 2008). Mechanisms encoded by plasmids to promote their stability

421 during growth and sporulation include the production of dynamic cytoskeletal filaments (Becker
422 *et al*., 2006) and post-segregational killing of plasmid-cured pre-spores with toxin-antitoxin
423 systems (Short *et al*., 2015). Interestingly, even lytic phage genomes can be incorporated into
424 spores (first described in the 1960s) by co-opting the host's chromosomal partitioning system
425 (Meijer *et al*., 2005).

426 **Diversity of cargo genes and associated phenotypes**

427 Mobile genetic elements, especially ICEs, are widespread in bacteria (Frost *et al*., 2005;
428 Guglielmini *et al*., 2011). Many known mobile genetic elements encode cargo genes that confer
429 easily recognizable phenotypes, notably antibiotic resistance. Other cargo genes provide less
430 obvious phenotypes but still fundamentally alter the physiology of the host cell. A large (500-kb)
431 ICE was discovered in *Mesorhizobium loti* because its horizontal transfer conferred the ability to
432 form nitrogen-fixing symbiotic rood nodules on *Lotus* plant species (Sullivan and Ronson, 1988).
433 In many pathogens, cargo genes in mobile elements are largely responsible for virulence. For
434 example, *Vibrio cholerae* is capable of a pathogenic lifestyle in human hosts due to the toxin-
435 encoding phage CTXΦ (Waldor and Mekalanos, 1996). In the sporulating pathogen *Bacillus*
436 *anthracis*, mobile genetic elements regulate both virulence and host development. Two plasmids,
437 pXO1 and pXO2, provide the genes for toxin synthesis and production of a protective capsule,
438 respectively (Green *et al*., 1985; Mikesell *et al*., 1983). pXO1 also contains a regulatory gene,
439 *atxA*, that regulates virulence factor production and inhibits host cell sporulation (Dale *et al*.,
440 2018). Co-regulation of virulence factors and sporulation is likely important during infection, as
441 *B. anthracis* spores are thought to be more susceptible than vegetative cells to eradication by the
442 immune system (Mock and Fouet, 2001).

443 Mobile elements are also known to alter the host's interaction with other horizontally
444 acquired DNA, which has implications for the fitness and evolvability of the host. For example,
445 the plasmid pBS32 in *B. subtilis* encodes an inhibitor of the host's DNA uptake machinery,
446 blocking natural transformation (Konkol *et al*., 2013). Interestingly, genes with roles in defense
447 against foreign DNA, CRISPR-Cas systems, are also identified within mobile elements (Faure *et*
448 *al*., 2019; McDonald *et al*., 2019; Millen *et al*., 2012). Competition between mobile elements not
449 only shapes the repertoire of cargo genes in a given cell, but it may also protect the host from
450 harmful elements.

451 Many mobile genetic elements have been identified bioinformatically from genome
452 sequences or discovered by means other than the phenotypes they provide (Bi *et al.*, 2012;
453 Guglielmini *et al.*, 2011; Johnson and Grossman, 2015). Many elements lack obvious cargo
454 genes, or at least lack cargo genes that have recognizable functions (Cury *et al*., 2017). We
455 suspect that many elements with uncharacterized cargo genes provide important traits to their
456 hosts beyond the scope of the phenotypes currently attributed to mobile elements. Though
457 mobile genetic elements can have remarkably broad host ranges, such as the Tn*916*-Tn*1545*
458 group of ICEs (Clewell *et al.*, 1995; Roberts and Mullany, 2009) and the IncP-1 group of
459 plasmids (Popowska and Krawczyk-Balska, 2013), cargo genes and their associated functions
460 could be highly specific to certain hosts.

461 Characterization of unknown cargo genes is likely to expand the diversity of traits currently
462 attributed to mobile genetic elements. We speculate that many of these genes modulate normal
463 host functions rather than provide entirely new phenotypes. Understanding cargo gene function
464 is critical for understanding interactions between and co-evolution of mobile elements and their
465 hosts.

466 **Methods and Materials**

467 **Media and growth conditions**

468 Prior to competition experiments, cells were grown as light lawns for approximately 20 hours
469 at room temperature on 1.5% agar plates containing 1% w/v glucose, 0.1% w/v monopotassium
470 glutamate, and 1x Spizizen's salts (2 g/l $(NH_4)SO_4$, 14 g/l K_2HPO_4, 6 g/l KH_2PO_4, 1 g/l
471 Na_3citrate-$2H_2O$, and 0.2 g/l $MgSO_4$-$7H_2O$) (Harwood and Cutting, 1990). Cells were
472 resuspended from light lawns and grown at 37ºC with shaking in $S7_{50}$ defined minimal medium
473 (Jaacks *et al*., 1989) with 1% w/v glucose and 0.1% w/v monopotassium glutamate. Biofilms
474 were grown at 30ºC on MSgg agar plates (as defined in Branda *et al*., 2001 with the exception of
475 tryptophan and phenylalanine, which we did not include). The sporulation medium used was
476 DSM (in liquid form or as plates solidified with 1.5% agar) (Harwood and Cutting, 1990). MSgg
477 agar and DSM agar plates were dried for 20-24 hours at 37ºC prior to use. Antibiotics were used
478 at the following concentrations for selection on LB agar plates: chloramphenicol (5 µg/ml),
479 kanamycin (5 µg/ml), spectinomycin (100 µg/ml), tetracycline (12.5 µg/ml), and a combination
480 of erythromycin (0.5 µg/ml) and lincomycin (12.5 µg/ml) to select for macrolide-lincosamide-
481 streptogramin (MLS) resistance.

482 **Strains and alleles**

483 The *B. subtilis* strains used are listed in Table 2. The strain background used in all
484 experiments was a derivative of the undomesticated strain NCIB3610 lacking its endogenous
485 plasmid pBS32 (NCIB3610 plasmid-free). ICE*Bs1*^{0} indicates the strain is cured of ICE*Bs1*.
486 Standard techniques were used for cloning and strain construction (Harwood and Cutting 1990).
487 Some alleles were previously described and are summarized below. Variants of ICE*Bs1* that
488 were blocked for transfer contained the *conEK476E* mutation derived from MMB1118 (Berkmen

489 *et al*., 2010). The *spo0A*Δ*Ps* allele was derived from AG1242 (Siranosian and Grossman, 1994).
490 The *amyE*::P*spoIIA-lacZ cat* allele was derived from KI938 (Chung *et al*., 1994). Essentially
491 identical alleles with P*spoIIE* and P*spoIIG* were also used.

492 Construction of selective markers for mating and competition experiments. ICE*Bs1* was
493 marked with the *cat* gene (conferring chloramphenicol resistance) between the divergently
494 transcribed genes *yddJ* and *spbK* (*yddK*). Markers used to select ICE*Bs1*-containing and ICE*Bs1*^{0}
495 cells were all integrated at *lacA* and contained *spec* (spectinomycin resistance), *mls* (macrolide-
496 lincosamide-streptogramin resistance), or *kan* (kanamycin resistance). The *mls* and *kan*
497 constructs also contained constitutively expressed fluorescent proteins BFP and RFP,
498 respectively. The plating efficiency of all markers was verified, and control competitions
499 (described below) were performed to measure marker-associated fitness effects.

500 Construction of ICE*Bs1* mutants. Fitness measurements of ICE*Bs1* mutants were performed
501 in a version of ICE*Bs1* unable to excise and replicate (locked-in ICE*Bs1*). All mutants were
502 isogenic to JMJ646 (ICE*Bs1* oriT* Δ*attR*::*tet*), which is unable to excise due to the *attR*::*tet*
503 deletion (Lee and Grossman, 2007). The origin of transfer was mutated (oriT*) to prevent
504 ICE*Bs1* replication while integrated, which is detrimental (Lee and Grossman, 2007; Menard and
505 Grossman, 2013). The markerless oriT* mutation was constructed by cloning *nicK*(oriT*) from
506 pJT245 and ~1 kb of upstream sequence into pCAL1422 (a plasmid that contains *E. coli lacZ*) by
507 isothermal assembly (Gibson *et al*., 2009), essentially as previously described (Thomas *et al*.,
508 2013). The resulting plasmid, pJMJ196, was integrated into the chromosome by single-crossover
509 recombination. Transformants were screened for loss of *lacZ*, indicating loss of the integrated
510 plasmid, and PCR was used to identify a clone containing the oriT* allele. Markerless deletions
511 of ICE*Bs1* sequence were also generated using pCAL1422-derived plasmids. The *rapI-phrI*

512 deletion was generated using pJMJ430 and removes the *rapI* and *phrI* ORFs. The P*xis* deletion
513 was generated using pJMJ199 and removes sequence from 149 bp to 27 bp upstream of the *xis*
514 ORF. This removes the presumed -35 and -10 of the promoter but does not remove the known
515 regulatory sites at the neighboring *immR* promoter (Auchtung *et al*., 2007). The *ydzL* deletion
516 was generated using pELS5 and fuses the first four and last two codons of *ydzL*. The *devI*
517 deletion was generated using pELS1 and fuses the first four and last two codons of *devI*. The
518 *sncO* deletion was generated using pELC815 and removes the *sncO* gene and 44 bp of upstream
519 sequence.

520 Construction of ectopic *rapI-phrI* construct. The *rapI-phrI* ORFs plus the promoter region
521 (352 bp upstream of *rapI*) and 112 bp of downstream sequence were cloned into pMMH253
522 (vector for integration at *bcaP*). The resulting plasmid (pJMJ354) was linearized and introduced
523 to *B. subtilis* by transformation and selection for kanamycin resistance. The corresponding empty
524 control construct was generated by transforming linearized pMMH253.

525 Construction of *lacA*::P*xis-devI*. We expressed *devI* from the P*xis* promoter by cloning
526 existing elements from a P*xis* gene expression construct marked with *mls* at *lacA* and inserting
527 the *devI* ORF by isothermal assembly. The resulting product was introduced to the chromosome
528 by transformation and selection for MLS resistance. The P*xis*-empty control strain contains an
529 identical construct lacking an ORF fused to P*xis*.

530 **Biofilm mating experiments**

531 Cultures were started from resuspended light lawns (described above) diluted to an initial
532 OD600 of 0.05 in $S7_{50}$ minimal medium. Cultures were grown to mid-exponential phase (OD600
533 ~0.5) at 37ºC with shaking. Cells were pelleted, resuspended in 1x Spizizen's salts, and diluted
534 to an OD600 of 0.01. Donor and recipient strains were mixed at the indicated frequencies and 50

535 µl of the mixture was spotted onto the center of MSgg agar plates. Spots were allowed to dry at
536 30ºC before flipping the plates. Plates were incubated at 30ºC for 4 days. At the time of
537 inoculation, the strain mixes were diluted and plated on LB agar plates containing the
538 appropriate antibiotics to determine the initial CFU/ml of the donor and recipient strains. After 4
539 days, the mature biofilms were scraped from the agar surface with sterile wooden sticks and
540 resuspended in 5 ml 1x Spizizen's salts, followed by mild sonication to disperse the cells. Cells
541 were diluted and selectively plated to determine the final CFU/ml of transconjugants.

542 **Competition experiments**

543 Cells were prepared for competition experiments as described above for biofilm mating
544 experiments. Strain mixtures at the indicated frequencies were spotted onto MSgg agar plates for
545 biofilm competitions and DSM agar plates for sporulation competitions. Plates were incubated at
546 30ºC for 4 days unless otherwise indicated. Biofilms/colonies were collected, disrupted, and
547 plated as described above. For time-course competitions, two replicate biofilms/colonies were
548 collected at each of the indicated times. Sporulation frequency was determined by selective
549 plating before and after a heat treatment at 85ºC for 20 minutes to enumerate total CFUs and
550 CFUs derived from heat-resistant spores. Relative fitness of ICE*Bs1*-containing cells over
551 ICE*Bs1*^{0} cells was determined as $(p_f/(1-p_f))/(p_i/(1-p_i))$, where p_f, p_i are the frequencies of
552 ICE*Bs1*-containing cells in the final and initial populations, respectively. Control competitions
553 between ICE*Bs1*-cured cells were performed to determine the fitness associated with the
554 *lacA*::{Pveg-*mTagBFP mls*} marker (JMJ574) used in ICE*Bs1*-containing cells relative to the
555 *lacA*::{Ppen-*mApple2 kan*} marker used in ICE*Bs1*-null cells (JMJ550). When the *mls*-marked
556 cells were started at a frequency of 0.01, their relative fitness was 0.7 ± 0.09 (average and
557 standard deviation from 3 independent experiments and a total of 9 biofilms).

558 **Gene expression assays**

559 Expression of sporulation genes was measured in cultures grown from single colonies in
560 liquid DSM at 37º with shaking. Cells were harvested at the indicated timepoints. For β-
561 galactosidase assays, growth was stopped by the addition of toluene (~1.5% final concentration).
562 β-galactosidase specific activity ({ΔA_{420} per minute per ml of culture per OD_{600}} x 1000) was
563 measured as described (Miller, 1972) after pelleting cell debris.

564 Biofilm gene expression was measured in cultures grown from single colonies in liquid
565 MSgg at 37º with shaking. For RT-qPCR assays, cells were harvested directly into ice-cold
566 methanol (1:1 methanol to culture volume) and pelleted. RNA was isolated using Qiagen
567 RNeasy PLUS kit with 10 mg/ml lysozyme. iScript Supermix (Bio-Rad) was used for reverse
568 transcriptase reactions to generate cDNA. Control reactions without reverse transcriptase were
569 performed to assess the amount of DNA present in the RNA samples. RNA was degraded by
570 adding 75% volume of 0.1 M NaOH and incubating at 70ºC for 10 minutes, followed by
571 neutralization with an equal volume of 0.1 M HCl. qPCR was done using SSoAdvanced SYBR
572 master mix and CFX96 Touch Real-Time PCR system (Bio-Rad). Primers used to measure *epsB*
573 were oJJ363 (5'-CGGAACAATATCGCACCATTC-3') and oJJ364 (5'-
574 CGCTGCACTGAACGATTTAC-3'). Primers used to quantify *tasA* were oJJ367 (5'-
575 GGATCACTTGCGATCAAAGAAG-3') and oJJ368 (5'-CTTCAAACTGGCTGAGGAAATC-
576 3'). Primers used to measure the control locus *gyrA* were oMEA128 (5'-
577 TGGAGCATTACCTTGACCATC-3') and oMEA129 (5'-AGCTCTCGCTTCTGCTTTAC-3').
578 The relative transcript copy numbers (as indicated by the Cp values measured by qPCR) of *epsB*
579 and *tasA* were normalized to *gyrA* after subtracting the signal from control reactions without
580 reverse transcriptase.

581

582 **Table 2: *B. subtilis* strains used[1]**

Strain	Relevant genotype
JMJ550	ICE*Bs1*^{0} *lacA*::{Ppen-*mApple2 kan*}
JMJ574	ICE*Bs1*^{0} *lacA*::{Pveg-*mTagBFP mls*}
JMJ576	ICE*Bs1*^{0} *bcaP*::{P*rapI-rapIphrI kan*} *lacA*::{Pveg-*mTagBFP mls*}
JMJ592	ICE*Bs1 yddJ-cat-yddK lacA*::{Pveg-*mTagBFP mls*}
JMJ593	ICE*Bs1 conEK476E yddJ-cat-yddK lacA*::{Pveg-*mTagBFP mls*}
JMJ646	ICE*Bs1* oriT* *attR*::*tet lacA*::{Pveg-*mTagBFP mls*}
JMJ662	ICE*Bs1* ΔP*xis* oriT* *attR*::*tet lacA*::{Pveg-*mTagBFP mls*}
JMJ686	ICE*Bs1* oriT* Δ*rapIphrI attR*::*tet lacA*::{Pveg-*mTagBFP mls*}
JMJ688	ICE*Bs1* oriT* Δ*sncO attR*::*tet lacA*::{Pveg-*mTagBFP mls*}
JMJ703	ICE*Bs1* oriT* Δ*devI attR*::*tet lacA*::{Pveg-*mTagBFP mls*}
JMJ704	ICE*Bs1* oriT* Δ*ydzL attR*::*tet lacA*::{Pveg-*mTagBFP mls*}
JMJ714	ICE*Bs1*^{0} *lacA*::*spec bcaP*::*kan*
JMJ725	ICE*Bs1*^{0} *lacA*::{P*xis-devI mls*}
JMJ727	ICE*Bs1*^{0} *lacA*::{P*xis*-empty *mls*}
JMJ731	ICE*Bs1*^{0} *lacA*::{P*xis-devI mls*} *amyE*::{P*spoIIE-lacZ cat*}
JMJ732	ICE*Bs1*^{0} *lacA*::{P*xis-devI mls*} *amyE*::{P*spoIIA-lacZ cat*}
JMJ733	ICE*Bs1*^{0} *lacA*::{P*xis-devI mls*} *amyE*::{P*spoIIG-lacZ cat*}
JMJ734	ICE*Bs1*^{0} *lacA*::{P*xis*-empty *mls*} *amyE*::{P*spoIIE-lacZ cat*}
JMJ735	ICE*Bs1*^{0} *lacA*::{P*xis*-empty *mls*} *amyE*::{P*spoIIA-lacZ cat*}
JMJ736	ICE*Bs1*^{0} *lacA*::{P*xis*-empty *mls*} *amyE*::{P*spoIIG-lacZ cat*}
JMJ785	ICE*Bs1* oriT* Δ*rapIphrI attR*::*tet bcaP*::{P*rapI-rapIphrI kan*} *lacA*::{Pveg-*mTagBFP mls*}
JMJ786	ICE*Bs1*^{0} *spo0AΔPs lacA*::{Ppen-*mApple2 kan*}
JMJ788	ICE*Bs1 conEK476E yddJ-cat-yddK spo0AΔPs lacA*::{Pveg-*mTagBFP mls*}

[1]All strains derived from NCIB3610 plasmid-free

583

584

585

586

587

588

589 **Acknowledgements**

590 We thank Mary Anderson and Janet Smith for helpful comments on the manuscript. Research
591 reported here is based upon work supported, in part, by the National Institute of General Medical
592 Sciences of the National Institutes of Health under award number R01GM050895 and R35
593 GM122538 to ADG. Any opinions, findings, and conclusions or recommendations expressed in
594 this report are those of the authors and do not necessarily reflect the views of the National
595 Institutes of Health. Funding for travel was provided by the MIT International Science and
596 Technology Initiatives (MISTI) MIT-Israel Seed Fund.

597

598

599 **References**

600

601 Auchtung JM, Lee CA, Garrison KL, Grossman AD. 2007. Identification and characterization of
602 the immunity repressor (ImmR) that controls the mobile genetic element ICEBs1 of Bacillus
603 subtilis. *Molecular Microbiology* **64**:1515–1528. doi:10.1111/j.1365-2958.2007.05748.x
604

605 Auchtung JM, Lee CA, Monson RE, Lehman AP, Grossman AD. 2005. Regulation of a Bacillus
606 subtilis mobile genetic element by intercellular signaling and the global DNA damage response.
607 *Proc Natl Acad Sci USA* **102**:12554–12559. doi:10.1073/pnas.0505835102
608

609 Avello M, Davis KP, Grossman AD. 2019. Identification, characterization and benefits of an
610 exclusion system in an integrative and conjugative element of Bacillus subtilis. *Molecular*
611 *Microbiology* **112**:1066–1082. doi:10.1111/mmi.14359
612

613 Bai U, Mandic-Mulec I, Smith I. 1993. SinI modulates the activity of SinR, a developmental
614 switch protein of Bacillus subtilis, by protein-protein interaction. *Genes Dev* **7**:139–148.
615 doi:10.1101/gad.7.1.139
616

617 Baltrus DA. 2013. Exploring the costs of horizontal gene transfer. *Trends in Ecology &*
618 *Evolution* **28**:489–495. doi:10.1016/j.tree.2013.04.002
619

620 Becker E, Herrera NC, Gunderson FQ, Derman AI, Dance AL, Sims J, Larsen RA, Pogliano J.
621 2006. DNA segregation by the bacterial actin AlfA during Bacillus subtilis growth and
622 development. *The EMBO Journal* **25**:5919–5931. doi:10.1038/sj.emboj.7601443
623

624 Bendori SO, Pollak S, Hizi D, Eldar A. 2015. The RapP-PhrP Quorum-Sensing System of
625 Bacillus subtilis Strain NCIB3610 Affects Biofilm Formation through Multiple Targets, Due to
626 an Atypical Signal-Insensitive Allele of RapP. *Journal of Bacteriology* **197**:592–602.
627 doi:10.1128/JB.02382-14
628
629 Berkmen MB, Lee CA, Loveday E-K, Grossman AD. 2010. Polar Positioning of a Conjugation
630 Protein from the Integrative and Conjugative Element ICEBs1 of Bacillus subtilis. *Journal of*
631 *Bacteriology* **192**:38–45. doi:10.1128/JB.00860-09
632
633 Bi D, Xu Z, Harrison EM, Tai C, Wei Y, He X, Jia S, Deng Z, Rajakumar K, Ou H-Y. 2012.
634 ICEberg: a web-based resource for integrative and conjugative elements found in Bacteria.
635 *Nucleic Acids Res* **40**:D621–D626. doi:10.1093/nar/gkr846
636
637 Bose B, Auchtung JM, Lee CA, Grossman AD. 2008. A conserved anti-repressor controls
638 horizontal gene transfer by proteolysis. *Molecular Microbiology* **70**:570–582.
639 doi:10.1111/j.1365-2958.2008.06414.x
640
641 Bose B, Grossman AD. 2011. Regulation of Horizontal Gene Transfer in Bacillus subtilis by
642 Activation of a Conserved Site-Specific Protease. *Journal of Bacteriology* **193**:22–29.
643 doi:10.1128/JB.01143-10
644
645 Branda SS, Gonzalez-Pastor JE, Ben-Yehuda S, Losick R, Kolter R. 2001. Fruiting body
646 formation by Bacillus subtilis. *Proceedings of the National Academy of Sciences* **98**:11621–
647 11626. doi:10.1073/pnas.191384198
648
649 Burrus V, Pavlovic G, Decaris B, Guédon G. 2002. The ICESt1 element of Streptococcus
650 thermophilus belongs to a large family of integrative and conjugative elements that exchange
651 modules and change their specificity of integration. *Plasmid* **48**:77–97. doi:10.1016/s0147-
652 619x(02)00102-6
653
654 Carraro N, Burrus V. 2015. The dualistic nature of integrative and conjugative elements. *Mobile*
655 *Genetic Elements* **5**:98–102. doi:10.1080/2159256X.2015.1102796
656
657 Chung JD, Stephanopoulos G, Ireton K, Grossman AD. 1994. Gene expression in single cells of
658 Bacillus subtilis: evidence that a threshold mechanism controls the initiation of sporulation. *J*
659 *Bacteriol* **176**:1977–1984.
660
661 Clewell DB, Flannagan SE, Jaworski DD, Clewell DB. 1995. Unconstrained bacterial
662 promiscuity: the Tn916–Tn1545 family of conjugative transposons. *Trends in Microbiology*
663 **3**:229–236. doi:10.1016/S0966-842X(00)88930-1
664
665 Cury J, Touchon M, Rocha EPC. 2017. Integrative and conjugative elements and their hosts:
666 composition, distribution and organization. *Nucleic Acids Res* **45**:8943–8956.
667 doi:10.1093/nar/gkx607
668

669 Dale JL, Raynor MJ, Ty MC, Hadjifrangiskou M, Koehler TM. 2018. A Dual Role for the
670 Bacillus anthracis Master Virulence Regulator AtxA: Control of Sporulation and Anthrax Toxin
671 Production. *Front Microbiol* **9**. doi:10.3389/fmicb.2018.00482
672
673 Dawes IW, Mandelstam J. 1970. Sporulation of Bacillus subtilis in Continuous Culture. *Journal*
674 *of Bacteriology* **103**:529–535. doi:10.1128/JB.103.3.529-535.1970
675
676 Dragoš A, Kiesewalter H, Martin M, Hsu C-Y, Hartmann R, Wechsler T, Eriksen C, Brix S,
677 Drescher K, Stanley-Wall N, Kümmerli R, Kovács ÁT. 2018. Division of Labor during Biofilm
678 Matrix Production. *Current Biology* **28**:1903-1913.e5. doi:10.1016/j.cub.2018.04.046
679
680 Errington J. 2001. Septation and chromosome segregation during sporulation in Bacillus subtilis.
681 *Current Opinion in Microbiology* **4**:660–666. doi:10.1016/S1369-5274(01)00266-1
682
683 Even-Tov E, Bendori SO, Valastyan J, Ke X, Pollak S, Bareia T, Ben-Zion I, Bassler BL, Eldar
684 A. 2016. Social Evolution Selects for Redundancy in Bacterial Quorum Sensing. *PLOS Biology*
685 **14**:e1002386. doi:10.1371/journal.pbio.1002386
686
687 Faure G, Shmakov SA, Yan WX, Cheng DR, Scott DA, Peters JE, Makarova KS, Koonin EV.
688 2019. CRISPR–Cas in mobile genetic elements: counter-defence and beyond. *Nat Rev Microbiol*
689 **17**:513–525. doi:10.1038/s41579-019-0204-7
690
691 Franke AE, Clewell DB. 1981. Evidence for a chromosome-borne resistance transposon (Tn916)
692 in Streptococcus faecalis that is capable of "conjugal" transfer in the absence of a conjugative
693 plasmid. *J Bacteriol* **145**:494–502.
694
695 Frost LS, Leplae R, Summers AO, Toussaint A. 2005. Mobile genetic elements: the agents of
696 open source evolution. *Nat Rev Microbiol* **3**:722–732. doi:10.1038/nrmicro1235
697
698 Gibson DG, Young L, Chuang R-Y, Venter JC, Hutchison CA, Smith HO. 2009. Enzymatic
699 assembly of DNA molecules up to several hundred kilobases. *Nat Methods* **6**:343–345.
700 doi:10.1038/nmeth.1318
701
702 Green BD, Battisti L, Koehler TM, Thorne CB, Ivins BE. 1985. Demonstration of a capsule
703 plasmid in Bacillus anthracis. *Infection and Immunity* **49**:291–297. doi:10.1128/IAI.49.2.291-
704 297.1985
705
706 Grossman AD, Losick R. 1988. Extracellular control of spore formation in Bacillus subtilis.
707 *PNAS* **85**:4369–4373. doi:10.1073/pnas.85.12.4369
708
709 Guglielmini J, Quintais L, Garcillán-Barcia MP, de la Cruz F, Rocha EPC. 2011. The Repertoire
710 of ICE in Prokaryotes Underscores the Unity, Diversity, and Ubiquity of Conjugation. *PLoS*
711 *Genet* **7**:e1002222. doi:10.1371/journal.pgen.1002222
712

713 Hahn J, Roggiani M, Dubnau D. 1995. The major role of Spo0A in genetic competence is to
714 downregulate abrB, an essential competence gene. *Journal of Bacteriology* **177**:3601–3605.
715 doi:10.1128/jb.177.12.3601-3605.1995
716
717 Hamon MA, Lazazzera BA. 2001. The sporulation transcription factor Spo0A is required for
718 biofilm development in Bacillus subtilis. *Molecular Microbiology* **42**:1199–1209.
719 doi:10.1046/j.1365-2958.2001.02709.x
720
721 Hamon MA, Stanley NR, Britton RA, Grossman AD, Lazazzera BA. 2004. Identification of
722 AbrB-regulated genes involved in biofilm formation by Bacillus subtilis. *Molecular*
723 *Microbiology* **52**:847–860. doi:10.1111/j.1365-2958.2004.04023.x
724
725 Harwood, C.R., and Cutting, S.M. (1990). Molecular Biological Methods for Bacillus, John
726 Wiley & Sons, Chichester, NY.
727
728 Higgins D, Dworkin J. 2012. Recent progress in Bacillus subtilis sporulation. *FEMS Microbiol*
729 *Rev* **36**:131–148. doi:10.1111/j.1574-6976.2011.00310.x
730
731 Hoch JA. 1993. Regulation of the phosphorelay and the initiation of sporulation in Bacillus
732 subtilis. *Annu Rev Microbiol* **47**:441–465. doi:10.1146/annurev.mi.47.100193.002301
733
734 Jaacks KJ, Healy J, Losick R, Grossman AD. 1989. Identification and characterization of genes
735 controlled by the sporulation-regulatory gene spo0H in Bacillus subtilis. *J Bacteriol* **171**:4121–
736 4129. doi:10.1128/jb.171.8.4121-4129.1989
737
738 Johnson CM, Grossman AD. 2015. Integrative and Conjugative Elements (ICEs): What They Do
739 and How They Work. *Annu Rev Genet* **49**:577–601. doi:10.1146/annurev-genet-112414-055018
740
741 Johnson CM, Harden MM, Grossman AD. 2020. An integrative and conjugative element
742 encodes an abortive infection system to protect host cells from predation by a bacteriophage.
743 *bioRxiv* 2020.12.13.422588. doi:10.1101/2020.12.13.422588
744
745 Kearns DB, Chu F, Branda SS, Kolter R, Losick R. 2005. A master regulator for biofilm
746 formation by Bacillus subtilis. *Molecular Microbiology* **55**:739–749. doi:10.1111/j.1365-
747 2958.2004.04440.x
748
749 Konkol MA, Blair KM, Kearns DB. 2013. Plasmid-Encoded ComI Inhibits Competence in the
750 Ancestral 3610 Strain of Bacillus subtilis. *Journal of Bacteriology* **195**:4085–4093.
751 doi:10.1128/JB.00696-13
752
753 Lécuyer F, Bourassa J-S, Gélinas M, Charron-Lamoureux V, Burrus V, Beauregard PB. 2018.
754 Biofilm Formation Drives Transfer of the Conjugative Element ICEBs1 in Bacillus subtilis.
755 *mSphere* **3**. doi:10.1128/mSphere.00473-18
756

757 Lee CA, Grossman AD. 2007. Identification of the Origin of Transfer (oriT) and DNA Relaxase
758 Required for Conjugation of the Integrative and Conjugative Element ICEBs1 of Bacillus
759 subtilis. *Journal of Bacteriology* **189**:7254–7261. doi:10.1128/JB.00932-07
760
761 Madsen JS, Burmølle M, Hansen LH, Sørensen SJ. 2012. The interconnection between biofilm
762 formation and horizontal gene transfer. *FEMS Immunol Med Microbiol* **65**:183–195.
763 doi:10.1111/j.1574-695X.2012.00960.x
764
765 McDonald ND, Regmi A, Morreale DP, Borowski JD, Boyd EF. 2019. CRISPR-Cas systems are
766 present predominantly on mobile genetic elements in Vibrio species. *BMC Genomics* **20**:105.
767 doi:10.1186/s12864-019-5439-1
768
769 Meijer WJ, Castilla-Llorente V, Villar L, Murray H, Errington J, Salas M. 2005. Molecular basis
770 for the exploitation of spore formation as survival mechanism by virulent phage ϕ29. *The EMBO*
771 *Journal* **24**:3647–3657. doi:10.1038/sj.emboj.7600826
772
773 Menard KL, Grossman AD. 2013. Selective Pressures to Maintain Attachment Site Specificity of
774 Integrative and Conjugative Elements. *PLoS Genet* **9**:e1003623.
775 doi:10.1371/journal.pgen.1003623
776
777 Mikesell P, Ivins BE, Ristroph JD, Dreier TM. 1983. Evidence for plasmid-mediated toxin
778 production in Bacillus anthracis. *Infection and Immunity* **39**:371–376. doi:10.1128/IAI.39.1.371-
779 376.1983
780
781 Millen AM, Horvath P, Boyaval P, Romero DA. 2012. Mobile CRISPR/Cas-Mediated
782 Bacteriophage Resistance in Lactococcus lactis. *PLoS One* **7**. doi:10.1371/journal.pone.0051663
783
784 Miller, J. (1972). Miller JH. Experiments in Molecular Genetics, Cold Spring Harbor Laboratory
785 Press, Cold Spring Harbor, NY.
786
787 Mock M, Fouet A. 2001. Anthrax. *Annu Rev Microbiol* **55**:647–671.
788 doi:10.1146/annurev.micro.55.1.647
789
790 Molin S, Tolker-Nielsen T. 2003. Gene transfer occurs with enhanced efficiency in biofilms and
791 induces enhanced stabilisation of the biofilm structure. *Current Opinion in Biotechnology*
792 **14**:255–261. doi:10.1016/S0958-1669(03)00036-3
793
794 Mutlu A, Trauth S, Ziesack M, Nagler K, Bergeest J-P, Rohr K, Becker N, Höfer T, Bischofs IB.
795 2018. Phenotypic memory in Bacillus subtilis links dormancy entry and exit by a spore quantity-
796 quality tradeoff. *Nature Communications* **9**:69. doi:10.1038/s41467-017-02477-1
797
798 Okinaka RT, Cloud K, Hampton O, Hoffmaster AR, Hill KK, Keim P, Koehler TM, Lamke G,
799 Kumano S, Mahillon J, Manter D, Martinez Y, Ricke D, Svensson R., Jackson PJ. 1999.
800 Sequence and Organization of pXO1, the Large Bacillus anthracis Plasmid Harboring the
801 Anthrax Toxin Genes. *Journal of Bacteriology* **181**:6509–6515. doi:10.1128/JB.181.20.6509-
802 6515.1999

Parashar V, Jeffrey PD, Neiditch MB. 2013. Conformational Change-Induced Repeat Domain Expansion Regulates Rap Phosphatase Quorum-Sensing Signal Receptors. *PLoS Biol* **11**:e1001512. doi:10.1371/journal.pbio.1001512

Pollak S, Omer Bendori S, Eldar A. 2015. A complex path for domestication of B. subtilis sociality. *Curr Genet* **61**:493–496. doi:10.1007/s00294-015-0479-9

Pollak S, Omer-Bendori S, Even-Tov E, Lipsman V, Bareia T, Ben-Zion I, Eldar A. 2016. Facultative cheating supports the coexistence of diverse quorum-sensing alleles. *Proc Natl Acad Sci USA* **113**:2152–2157. doi:10.1073/pnas.1520615113

Popowska M, Krawczyk-Balska A. 2013. Broad-host-range IncP-1 plasmids and their resistance potential. *Front Microbiol* **4**. doi:10.3389/fmicb.2013.00044

Short FL, Monson RE, Salmond GP. 2015. A Type III protein-RNA toxin-antitoxin system from *Bacillus thuringiensis* promotes plasmid retention during spore development. *RNA Biology* **12**:933–937. doi:10.1080/15476286.2015.1073438

Singh PK, Ramachandran G, Ramos-Ruiz R, Peiró-Pastor R, Abia D, Wu LJ, Meijer WJJ. 2013. Mobility of the native Bacillus subtilis conjugative plasmid pLS20 is regulated by intercellular signaling. *PLoS Genet* **9**:e1003892. doi:10.1371/journal.pgen.1003892

Siranosian KJ, Grossman AD. 1994. Activation of spo0A transcription by sigma H is necessary for sporulation but not for competence in Bacillus subtilis. *J Bacteriol* **176**:3812–3815.

Smith P, Schuster M. 2019. Public goods and cheating in microbes. *Current Biology* **29**:R442–R447. doi:10.1016/j.cub.2019.03.001

Sonenshein AL. 2000. Control of sporulation initiation in Bacillus subtilis. *Current Opinion in Microbiology* **3**:561–566. doi:10.1016/S1369-5274(00)00141-7

Sullivan JT, Ronson CW. 1998. Evolution of rhizobia by acquisition of a 500-kb symbiosis island that integrates into a phe-tRNA gene. *Proceedings of the National Academy of Sciences* **95**:5145–5149. doi:10.1073/pnas.95.9.5145

Thomas J, Lee CA, Grossman AD. 2013. A Conserved Helicase Processivity Factor Is Needed for Conjugation and Replication of an Integrative and Conjugative Element. *PLoS Genet* **9**. doi:10.1371/journal.pgen.1003198

Tokuda Y, Ano T, Shoda M. 1993. Characteristics of plasmid stability in Bacillus subtilis NB22, an antifungal-antibiotic iturin producer. *Journal of Fermentation and Bioengineering* **75**:319–321. doi:10.1016/0922-338X(93)90159-6

Treangen TJ, Rocha EPC. 2011. Horizontal Transfer, Not Duplication, Drives the Expansion of Protein Families in Prokaryotes. *PLoS Genet* **7**. doi:10.1371/journal.pgen.1001284

849
850 Turgeon N, Laflamme C, Ho J, Duchaine C. 2008. Evaluation of the plasmid copy number in B.
851 cereus spores, during germination, bacterial growth and sporulation using real-time PCR.
852 *Plasmid* **60**:118–124. doi:10.1016/j.plasmid.2008.05.001
853
854 Vlamakis H, Aguilar C, Losick R, Kolter R. 2008. Control of cell fate by the formation of an
855 architecturally complex bacterial community. *Genes & Development* **22**:945–953.
856 doi:10.1101/gad.1645008
857
858 Vlamakis H, Chai Y, Beauregard P, Losick R, Kolter R. 2013. Sticking together: building a
859 biofilm the Bacillus subtilis way. *Nat Rev Microbiol* **11**:157–168. doi:10.1038/nrmicro2960
860
861 Waldor MK, Mekalanos JJ. 1996. Lysogenic conversion by a filamentous phage encoding
862 cholera toxin. *Science* **272**:1910–1914. doi:10.1126/science.272.5270.1910
863
864 Wozniak RAF, Waldor MK. 2010. Integrative and conjugative elements: mosaic mobile genetic
865 elements enabling dynamic lateral gene flow. *Nat Rev Microbiol* **8**:552–563.
866 doi:10.1038/nrmicro2382