A mobile genetic element increases bacterial host fitness by manipulating development

Joshua M. Jones[1], Ilana Grinberg[2], Avigdor Eldar[2,*], and Alan D. Grossman[1,*]

[1]Department of Biology

Massachusetts Institute of Technology

Cambridge, MA 02139 USA

[2]Department of Molecular Microbiology and Biotechnology

Faculty of Life Sciences

Tel Aviv University

Tel Aviv 69978, Israel

*Corresponding authors:
email: avigdor@gmail.com
email: adg@mit.edu

Abstract

Horizontal gene transfer is a major force in bacterial evolution. Mobile genetic elements are responsible for much of horizontal gene transfer and also carry beneficial cargo genes. Uncovering strategies used by mobile genetic elements to benefit host cells is crucial for understanding their stability and spread in populations. We describe a benefit that ICE*Bs1*, an integrative and conjugative element of *Bacillus subtilis*, provides to its host cells. Activation of ICE*Bs1* conferred a frequency-dependent selective advantage to host cells during two different developmental processes: biofilm formation and sporulation. These benefits were due to inhibition of biofilm-associated gene expression and delayed sporulation by ICE*Bs1*-containing cells, enabling them to exploit their neighbors and grow more prior to development. A single ICE*Bs1* gene, *devI* (formerly *ydcO*), was both necessary and sufficient for inhibition of development. Manipulation of host developmental programs allows ICE*Bs1* to increase host fitness, thereby increasing propagation of the element.

43 **Introduction**

44 Conjugative elements and phages are abundant mobile genetic elements in bacteria, capable
45 of transferring DNA between cells (Frost *et al*., 2005). Integrative and conjugative elements
46 (ICEs) appear to be the most widespread type of conjugative element (Guglielmini *et al.*, 2011).
47 ICEs are found integrated in a host genome. When activated, they excise and produce
48 conjugation machinery that transfers the element DNA from the host cell to recipients (Carraro
49 and Burrus, 2015; Johnson and Grossman, 2015; Wozniak and Waldor, 2010).

50 ICEs often carry "cargo" genes that are not necessary for transfer but confer a phenotype to
51 host cells. In fact, ICEs (conjugative transposons) were first identified because of the phenotypes
52 conferred by cargo genes (Franke and Clewell, 1981). Cargo genes include those encoding
53 antibiotic resistances, metabolic pathways, and determinants of pathogenesis and symbiosis
54 (Johnson and Grossman, 2015). Transfer of mobile elements between cells contributes to rapid
55 evolution and spread of associated cargo genes and phenotypes (Frost *et al*., 2005; Treangen and
56 Rocha, 2011).

57 Despite the benefits cargo genes can provide, the maintenance and transfer of mobile genetic
58 elements requires host cellular resources and in some cases is lethal (Baltrus, 2013). Persistence
59 of a mobile genetic element therefore requires balancing the cost to the host with benefits and/or
60 a sufficiently high transfer rate. Many mobile elements, especially ICEs, have now been
61 identified bioinformatically (Bi *et al*., 2012; Guglielmini *et al.*, 2011). Many of these ICEs do not
62 contain cargo genes with obvious functions that can be inferred from sequence or easily detected
63 experimentally (Cury *et al*., 2017).

64 ICE*Bs1*, a relatively small (~20 kb) ICE found in most strains of *Bacillus subtilis*, was
65 identified bioinformatically (Burrus *et al*., 2002) and experimentally based on its regulation by

66 cell-cell signaling (Auchtung *et al*., 2005). Most of the ICE*Bs1* genes needed for conjugation are
67 grouped together in an operon that is repressed until activating signals are sensed. Two pathways
68 activate ICE*Bs1*, both of which lead to cleavage of the repressor ImmR by the protease and anti-
69 repressor ImmA (Auchtung *et al*., 2007; Bose *et al.*, 2008; Bose and Grossman, 2011). ICE*Bs1*
70 contains the cell-cell signaling genes, *rapI* and *phrI*, which regulate ICE*Bs1* activation by
71 sensing population density and the relative abundance of ICE*Bs1*-containing host cells
72 (Auchtung *et al*., 2005). RapI is produced at high cell density and during the transition to
73 stationary phase and stimulates the proteolytic cleavage of the repressor ImmR by the protease
74 ImmA (Bose and Grossman, 2011). Overproduction of RapI stimulates activation of ICE*Bs1* in
75 >90% of cells (Auchtung *et al*., 2005). RapI activity (and therefore ICE*Bs1* activation) is
76 inhibited by PhrI, a peptide that is secreted by cells that contain ICE*Bs1*. PhrI levels indicate the
77 relative abundance of ICE*Bs1*-containing cells in the population, preventing the activation and
78 possible redundant transfer of ICE*Bs1* if most nearby cells already contain the element. ICE*Bs1*
79 is also activated during the RecA-dependent DNA damage response (Auchtung *et al*., 2005).
80 In addition to conjugation genes, ICE*Bs1* contains two recently characterized genes that can
81 benefit host cells. 1) *yddJ* is expressed even when the ICE conjugation genes are not. It encodes
82 an exclusion protein that enables ICE*Bs1*-containing cells to block incoming transfer of
83 additional copies of ICE*Bs1* from other would-be donor cells (Avello *et al*., 2019). Without
84 YddJ, excessive attempted conjugation from surrounding cells can be lethal (Avello *et al*., 2019).
85 2) *spbK* (*yddK*) is also expressed even when the conjugation genes are repressed. It protects
86 ICE*Bs1*-containing cells from predation by the lysogenic phage SPß via an abortive infection
87 mechanism (Johnson *et al*., 2020, manuscript in preparation).

88 Biofilms appear to be hotspots of horizontal gene transfer for bacteria growing in natural
89 settings (Madsen *et al*., 2012; Molin and Tolker-Nielsen, 2003). Undomesticated strains of *B.*
90 *subtilis* form complex biofilms on agar plates and at the air-liquid interface in standing cultures
91 (Vlamakis *et al*., 2013). There is also extensive spore formation in *B. subtilis* biofilms (Branda *et*
92 *al*., 2001; Vlamakis *et al*., 2008). In addition, during growth in a biofilm, ICE*Bs1* is naturally
93 activated and transfers efficiently, generating on the order of 10 new ICE*Bs1*-containing host
94 cells (transconjugants) per donor cell (Lécuyer *et al*. 2018). *B. subtilis* biofilms are held together
95 by a matrix composed of secreted exopolysaccharides, protein fibers, and DNA (Vlamakis *et al*.,
96 2013). This matrix reinforces cell-cell contacts, likely promoting rapid spread of ICE*Bs1* by
97 conjugation. Additionally, the conditions that promote biofilm formation (high cell density) also
98 promote activation and transfer of ICE*Bs1* as well as sporulation (Auchtung *et al*., 2005;
99 Grossman and Losick, 1988). Though biofilm growth is clearly beneficial to conjugation, it is
100 unknown how ICE*Bs1* impacts its host cells under these conditions.
101 In this study, we describe a selective advantage provided by ICE*Bs1* to its host cells during
102 growth in biofilms. This fitness benefit was due to inhibition of host biofilm and spore
103 development. We identified the ICE*Bs1* gene *devI* (formerly *ydcO*) as necessary and sufficient to
104 inhibit host development and provide a selective advantage to ICE*Bs1*-containing cells. We also
105 provide evidence that *devI* inhibits the key developmental transcription factor Spo0A, reducing
106 its ability to stimulate biofilm and sporulation gene expression. *devI* (*ydcO*) is conserved in other
107 ICE*Bs1*-like elements, indicating that manipulation of host development may be a conserved
108 strategy among this family of mobile genetic elements. We postulate that manipulation of host
109 pathways may be a common function of many of the as yet uncharacterized cargo genes in ICEs.
110

111 **Results**

112 **ICE*Bs1* spreads efficiently in biofilms by conjugation**

113 Biofilm formation is characteristic of many bacteria growing in natural settings, including *B.*
114 *subtilis*. We used biofilm growth to ask whether ICE*Bs1* affected the fitness of its host cells
115 under conditions that naturally promote its spread. We performed competition experiments in
116 biofilms using strains of undomesticated *B. subtilis* (NCIB3610 plasmid-free) with or without
117 ICE*Bs1*.

118 We observed highly efficient spread of ICE*Bs1* at low donor to recipient ratios (Table 1)
119 during growth in biofilms, similar to results reported previously (Lécuyer *et al*., 2018). To
120 measure mating we mixed ICE*Bs1*-containing cells (potential donors) with cells that did not
121 contain ICE*Bs1* (ICE*Bs1*^{0}, potential recipients) and co-cultured the mix on standard biofilm-
122 stimulating growth medium (MSgg agar) (Branda *et al*., 2001). Since ICE*Bs1* induction is
123 regulated by cell-cell signaling, we varied the initial frequency of ICE*Bs1*+ cells between
124 approximately 0.01 and 0.9. We inserted unique selectable markers (antibiotic resistances) in the
125 chromosomes of the donors and recipients as well as within ICE*Bs1*. After four days of growth at
126 30°C (approximately 17 net doublings of the initial population), biofilms were disrupted and the
127 number of transconjugants was determined by selective plating.

128 We found that after four days of biofilm growth, the frequency of transconjugants ranged
129 from ~0.4 – 0.6 of total cells in the biofilm for starting donor frequencies of ~0.01 – 0.5 (Table
130 1). The highest frequency of transconjugants was observed when the starting frequency of
131 ICE*Bs1*-containing cells was ~0.1. Enhanced conjugation at low donor to recipient ratios is
132 likely due to regulation of ICE*Bs1* by cell-cell signaling (induction is inhibited by the presence

133 of other potential donors) and the higher likelihood of contacting potential recipients at low
134 frequencies of donors.
135

Table 1: Frequency of transconjugants generated in biofilm matings

Initial frequency ICE*Bs1* donors[1]	Final frequency transconjugants[2]
0.008 ± 0.002	0.42 ± 0.13
0.10 ± 0.03	0.64 ± 0.15
0.47 ± 0.05	0.44 ± 0.07
0.89 ± 0.03	0.063 ± 0.008

[1] ICE*Bs1*-containing cells (JMJ592) were mixed with ICE*Bs1*-cured cells (JMJ550). The initial frequencies reported are the average ± standard deviation from three independent experiments.
[2] The final frequencies of transconjugants reported are the average ± standard deviation from a total of 9 biofilms from 3 independent experiments.

136
137 The high levels of ICE*Bs1* conjugation during growth in biofilms presented a challenge for
138 quantifying the fitness of ICE*Bs1*-containing host cells relative to ICE*Bs1*^{0} cells. Mating
139 converts a large fraction of ICE*Bs1*^{0} cells to transconjugants (ICE*Bs1*-containing), reducing the
140 ICE*Bs1*^{0} proportion of the population in a manner unrelated to host fitness. To measure the effect
141 of ICE*Bs1* on host fitness, we blocked conjugative DNA transfer using the *conEK476E* mutation
142 (Berkmen *et al*., 2010). We then compared the proportion of ICE*Bs1*-containing hosts to
143 ICE*Bs1*^{0} cells without the confounding influence of conjugation.

144 **ICE*Bs1* provides a frequency-dependent selective advantage in biofilms**

145 We found that cells containing ICE*Bs1* that is incapable of conjugation
146 {ICE*Bs1*(*conEK476E*)} had a fitness advantage over cells lacking ICE*Bs1* during biofilm growth
147 when they were initially present as a minority of the population. As before, we varied the initial
148 frequency of ICE*Bs1*-containing host cells in the inoculum between approximately 0.01 and 0.9.

149 To measure fitness we determined the frequency of ICE*Bs1*-containing cells (f_{ICE}) and ICE*Bs1*^{0}
150 (f_{NULL}) cells in the initial inoculum and in mature biofilms (4 days of growth at 30ºC) by
151 selective plating. The relative fitness of the ICE*Bs1*-containing cells was calculated as the fold
152 change in the ratio of f_{ICE} / f_{NULL} over the course of the competition.

153 We found that the fitness of ICE*Bs1*-containing cells was dependent on their initial frequency
154 in the population (Fig. 1A). The frequency-dependence was most likely due to regulation of
155 ICE*Bs1* gene expression by the cell-cell signaling genes *rapI-phrI* or some other function of
156 *rapI*. Cells with ICE*Bs1* had a selective advantage at low frequencies (0.01 or 0.1) when the
157 element is most strongly activated. At high frequencies in the population (0.5 or 0.9), when there
158 is little or no activation, fitness of ICE*Bs1*-containing cells was approximately neutral (Fig. 1A).
159 The final growth yields of the populations were similar regardless of the frequency of ICE*Bs1*-
160 containing cells (Fig. 1C).

161 We performed control competitions of two differentially marked ICE*Bs1*^{0} strains to verify
162 that the enhanced fitness we observed was due to the presence of ICE*Bs1* rather than an inherent
163 fitness difference associated with antibiotic resistances (see Methods and Materials). There was a
164 small cost associated with the marker used to select cells containing ICE*Bs1* (relative fitness 0.7
165 ±0.09), leading to a slight underestimate of the selective advantage to these cells.

166 There is a large amount of sporulation in *B. subtilis* biofilms (Branda *et al*., 2001; Vlamakis
167 *et al*., 2008). Consistent with this, we found that approximately 80% of viable colony-forming
168 units (CFUs) in a mature biofilm after 3 days were from spores. The selective advantage to cells
169 containing ICE*Bs1* growing in biofilms could be due to sporulation and/or biofilm development.
170

171

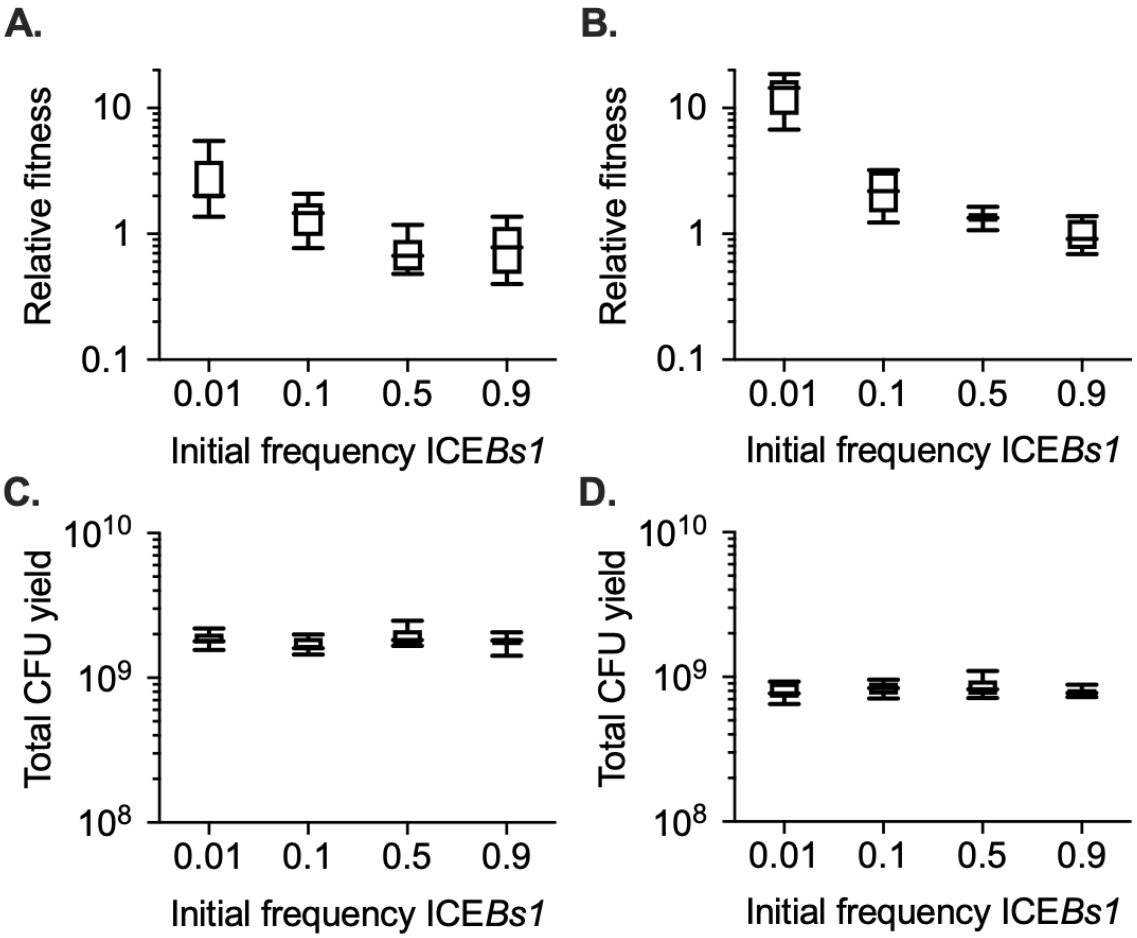

Figure 1. The fitness of ICE*Bs1*-containing cells during development depends on their initial frequency in the population. The fitness of ICE*Bs1*-containing cells (JMJ593) relative to ICE*Bs1*-cured cells (JMJ550) was measured by competition during biofilm growth (A) or growth on sporulation medium without biofilm formation (B). The total growth yields in biofilms (C) and on sporulation medium (D) were determined by counting CFUs derived from both cells and spores. Data shown are pooled from 3 independent experiments. A total of 9 populations were analyzed per initial frequency. Boxes extend from the lower to upper quartiles of the data, and the middle line indicates the median fitness. Whiskers indicate the range of the fitness measurements.

172 **ICE*Bs1* confers a selective advantage in biofilms without sporulation**

173 We blocked sporulation using a mutation that causes a reduction in the amount of the
174 transcription factor Spo0A that is required for spore formation. The *spo0A*Δ*Ps* mutation is a
175 deletion of the sigma-H-dependent promoter upstream of *spo0A* (Siranosian and Grossman,
176 1994). This mutation reduces production of Spo0A, and cells do not achieve the threshold
177 concentration required to initiate sporulation (Chung *et al*., 1994). *spo0A*Δ*Ps* mutant cells
178 formed biofilms that were morphologically similar to those formed by wild type cells.

179 In biofilms without sporulation, *spo0A*Δ*Ps* mutant cells containing ICE*Bs1* (JMJ788) had a
180 selective advantage compared to *spo0A*Δ*Ps* mutant cells without ICE*Bs1* (JMJ786). Notably, the
181 median fitness for *spo0A*Δ*Ps* mutant cells containing ICE*Bs1* at a low frequency in the
182 population was approximately six. Thus, sporulation was not required for a fitness benefit to
183 ICE*Bs1*-containing cells in biofilms.

184 Fitness of cells in biofilms can be affected by production of the biofilm matrix. For example,
185 cells that "cheat" by contributing less to biofilm matrix production reap the benefits of growing
186 with other cells that bear the cost of matrix gene expression (Dragoš *et al*., 2018). We showed
187 that cells containing ICE*Bs1* "cheat" by decreasing expression of biofilm matrix genes compared
188 to cells without ICE*Bs1* (see below).

189 **ICE*Bs1* confers a selective advantage during sporulation, in the absence of biofilms**

190 We found that cells containing ICE*Bs1* also had a frequency-dependent selective advantage
191 during sporulation, in the absence of biofilms. We prepared mixtures of cells with and without
192 ICE*Bs1* as described above. These mixtures were spotted onto a medium (DSM agar) that
193 promotes high levels of sporulation. During growth on this medium, there are no complex colony
194 features found in biofilms. As in the biofilm competitions, cells containing ICE*Bs1* had a

195 frequency-dependent selective advantage during sporulation (Fig. 1B). At an initial frequency of
196 approximately 0.01 the median relative fitness of the ICE*Bs1*-containing cells was approximately
197 14 (14.5 ± 4.3). As in biofilms, the total growth yields of the populations were similar regardless
198 of ICE*Bs1* host frequency (Fig. 1D). These results demonstrate that ICE*Bs1* confers a selective
199 advantage to cells growing on DSM agar, outside the context of biofilms. This could be due to
200 sporulation or growth under these specific conditions.

201 We found that sporulation was required for the strong selective advantage during growth on
202 sporulation medium (DSM agar). The fitness benefit associated with the ICE*Bs1*-containing cells
203 at a low frequency in the population was greatly reduced in the *spo0A*Δ*Ps* mutant (no
204 sporulation). The sporulation mutant with ICE*Bs1* had a median fitness of approximately 1.5
205 compared to approximately 9 for wild-type. Based on these results, we conclude that the
206 presence of ICE*Bs1* confers a frequency-dependent selective advantage during sporulation.

207 Together, our results demonstrate that cells containing ICE*Bs1* have a frequency-dependent
208 selective advantage in biofilms and during sporulation. This selective advantage is independent
209 of the ability of ICE*Bs1* to actually transfer from one cell to another. Biofilm formation and
210 sporulation are both regulated by the transcription factor Spo0A (Hamon and Lazazzera, 2001).
211 Our results indicate that the presence of ICE*Bs1* could somehow be inhibiting the activity or
212 activation of Spo0A.

213 **ICE*Bs1*-containing cells have a frequency-dependent delay in sporulation**

214 We hypothesized that some ICE*Bs1*-encoded gene(s) inhibit host cell development. This
215 inhibition could delay development and enable cells to continue growth for a small number of
216 generations. This model derives from analogous phenotypes of mutants that do not enter the
217 sporulation pathway (Dawes and Mandelstam, 1970). Mutants that delay the start of sporulation

218 have a growth advantage as they are able to divide one or a few more times while other cells in
219 the population stop growing and start to sporulate.

220 We found that in mixed populations sporulation was delayed in cells containing ICE*Bs1*
221 compared to cells without ICE*Bs1*. As above, we used an ICE*Bs1* mutant that is incapable of
222 conjugation {ICE*Bs1*(*conEK476E*)}, and the phenotype was dependent on the initial frequency
223 of the ICE*Bs1*-containing cells in the population. Sampling to quantify CFUs (spores and cells)
224 disrupts and prevents monitoring a single population over time. We started several replicate
225 populations, each of which we sampled once at different times to create a time-course. Spore
226 frequency was determined by measuring heat-resistant CFUs as a fraction of total CFUs for
227 ICE*Bs1*-containing and ICE*Bs1*-cured strains that contained different antibiotic resistance
228 markers to distinguish the strains.

229 <u>Sporulation is delayed in ICE*Bs1* host cells during biofilm formation.</u> We found that
230 sporulation of ICE*Bs1*-containing cells was delayed in a frequency-dependent manner during
231 growth in biofilms (Fig. 2A, 2B). When ICE*Bs1*-containing cells were started at a frequency of
232 approximately 0.01, they reached their maximum sporulation frequency (>80% spores) roughly
233 17 hours later than the cells without ICE*Bs1* (Fig. 2A). After three days of biofilm growth, the
234 sporulation frequencies of ICE*Bs1*-containing and ICE*Bs1*-cured cells were indistinguishable.
235 Over this period of time the total frequency of ICE*Bs1*-containing cells in the population
236 typically rose from ~0.01 to ~0.03, giving a relative fitness (~3) consistent with results above
237 (Fig. 1A). When the ICE*Bs1*-containing cells were the majority in the population (initial
238 frequency ~0.9) the timing and sporulation frequencies of the ICE*Bs1*-containing and ICE*Bs1*-
239 cured cells were indistinguishable (Fig. 2B).
240

241

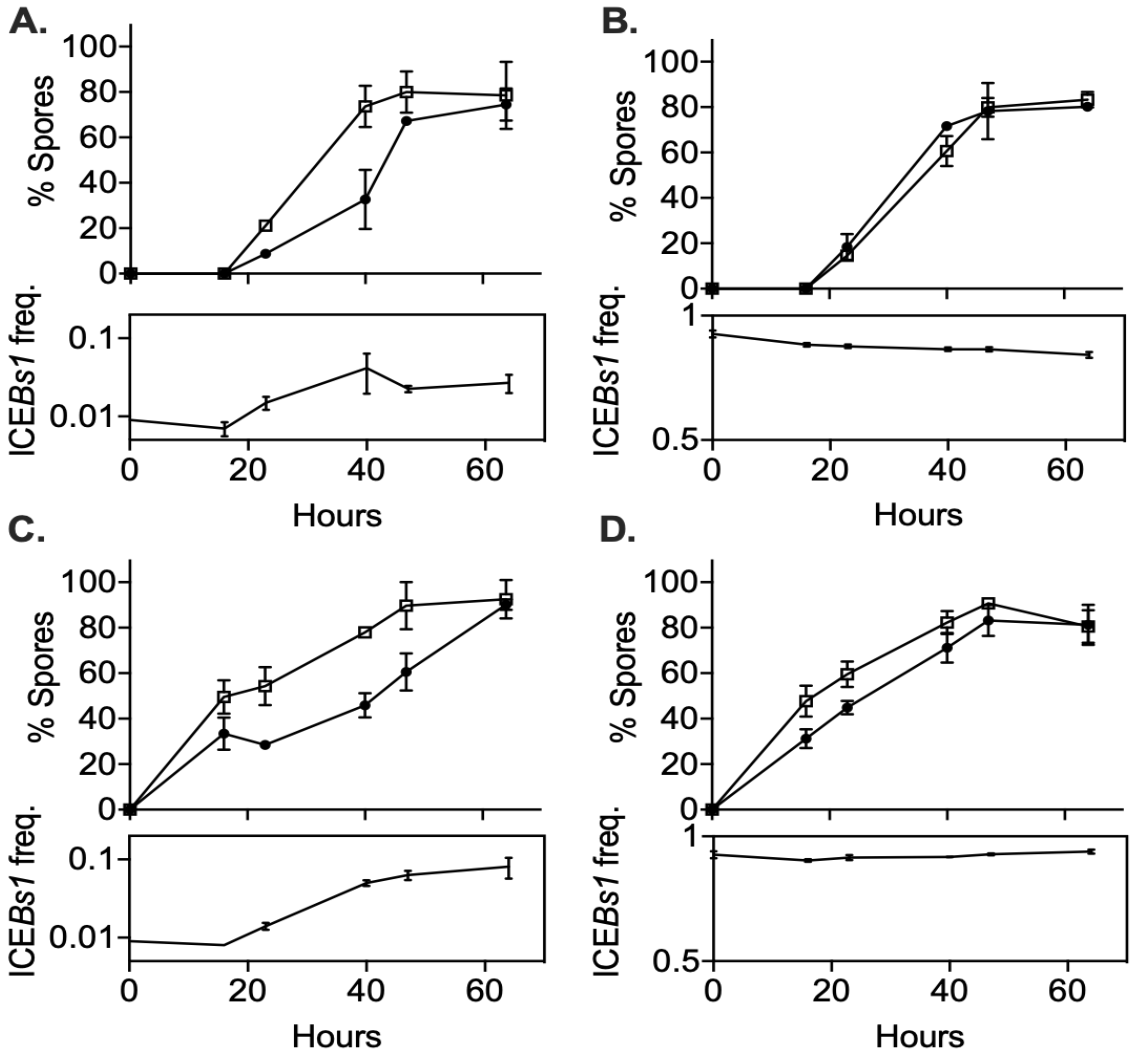

Figure 2. ICE*Bs1*-containing cells delay sporulation in a frequency-dependent manner. ICE*Bs1*-containing cells (JMJ593, black circles) were mixed with ICE*Bs1*-cured cells (JMJ550, open squares) at an initial frequency of 0.01 and spotted onto biofilm growth medium (A) or sporulation medium (C). Mixtures with ICE*Bs1*-containing cells at an initial frequency of 0.9 were also spotted onto biofilm medium (B) and sporulation medium (D). Biofilms and colonies were harvested at the indicated times to determine the fraction of CFUs derived from heat-resistant spores for both the ICE*Bs1*-containing and the ICE*Bs1*-cured cells. Boxes below each graph indicate the frequency of ICE*Bs1*-containing CFUs at each timepoint. Data shown are the average from two populations per timepoint with error bars indicating the standard deviation. A representative experiment is shown.

242 Sporulation is delayed in ICE*Bs1* host cells during sporulation in the absence of biofilms.
243 We also found that sporulation of ICE*Bs1*-containing cells was delayed in a frequency-dependent
244 manner during sporulation in the absence of biofilm formation (Fig. 2C, 2D). When the ICE*Bs1*
245 containing cells were inoculated at a low frequency (approximately 0.01), the delay in
246 sporulation was qualitatively similar to that observed in biofilms (Fig. 2C). However, the
247 increase in the total frequency of ICE*Bs1*-containing cells in the population was approximately
248 10-fold, giving a relative fitness of approximately 10, consistent with results described above
249 (Fig. 1B). This increase was much greater than the approximately 3-fold increase during biofilm
250 formation.

251 We suspect that the stronger selective advantage of ICE*Bs1*-containing cells on sporulation
252 medium is due to the earlier onset of sporulation. By 16 hours of growth on sporulation medium,
253 spores made up about 40% of the total CFUs. By the same time in biofilms spores were
254 undetectable (limit of detection ~0.03% spores).

255 ***rapI-phrI* are necessary but not sufficient for enhanced fitness**

256 The fitness benefits provided by ICE*Bs1* were dependent on the relative abundance of
257 ICE*Bs1*-containing cells, indicating that the cell-cell signaling genes *rapI-phrI* in ICE*Bs1* were
258 likely involved, either directly or indirectly. Other Rap proteins in *B. subtilis* are known to
259 regulate development by inhibiting phosphorylation (activation) of the transcription factor
260 Spo0A (Sonenshein, 2000). RapI, like other Rap proteins in *B. subtilis*, can inhibit the pathway
261 needed to phosphorylate (activate) the transcription factor Spo0A, and overexpression of *rapI* in
262 vivo inhibits sporulation (Parashar *et al*., 2013, Singh *et al.,* 2013). However, it was unknown
263 whether RapI regulates development in vivo under physiological conditions. Results described
264 below demonstrate that the *rapI-phrI* system is required for the fitness advantage of ICE*Bs1*-

265 containing cells, but that this requirement is by virtue of causing induction of ICE*Bs1* gene
266 expression. Another gene in ICE*Bs1* is both necessary and sufficient for the selective advantage
267 of ICE*Bs1*-containing cells during development.

268 <u>*rapI-phrI* are required for the fitness benefit of cells containing ICE*Bs1*.</u> We deleted *rapI-*
269 *phrI* (Δ*rapI-phrI*) in ICE*Bs1* and compared the fitness conferred by this mutant to that conferred
270 by ICE*Bs1* with *rapI-phrI*. Because loss of *rapI* prevents induction of gene expression, excision,
271 and replication of ICE*Bs1*, we used ICE*Bs1* mutants ('locked-in') that are incapable of excision
272 or replication (see Methods and Materials), regardless of the presence or absence of *rapI*.
273 Preventing excision and replication of ICE*Bs1* allowed us to compare the fitness of wild-type
274 ICE*Bs1* to ICE*Bs1*Δ*rapI-phrI* (and other mutants), which would otherwise have a lower gene
275 copy number due to a lower frequency of induction.

276 We verified that locked-in ICE*Bs1* still conferred a fitness benefit to host cells. During
277 sporulation in biofilms (MSgg agar), cells containing locked-in ICE*Bs1* had a relative fitness of
278 approximately 14 when they were started at a low frequency in the population (~0.01) (Fig. 3A).
279 This benefit was much greater than that conferred by wild-type ICE*Bs1* that can excise and
280 replicate. We suspect that replication of ICE*Bs1* incurs a fitness cost to the host cell that reduces
281 the apparent benefit. The sources of this burden could include use of host resources, the host's
282 response to single-stranded DNA produced by rolling-circle-replication of ICE*Bs1*, and increases
283 in ICE*Bs1* gene expression due to increased copy number.

284 We found that *rapI-phrI* were required for the fitness benefit conferred by ICE*Bs1*. During
285 sporulation in biofilms (MSgg agar), the relative fitness of the Δ(*rapI-phrI*) host strain was
286 approximately neutral (Fig. 3A), in contrast to the high fitness (median ~14) provided by ICE*Bs1*
287 containing *rapI-phrI* when the ICE*Bs1*-containing cells were started at a low frequency (~0.01).

288

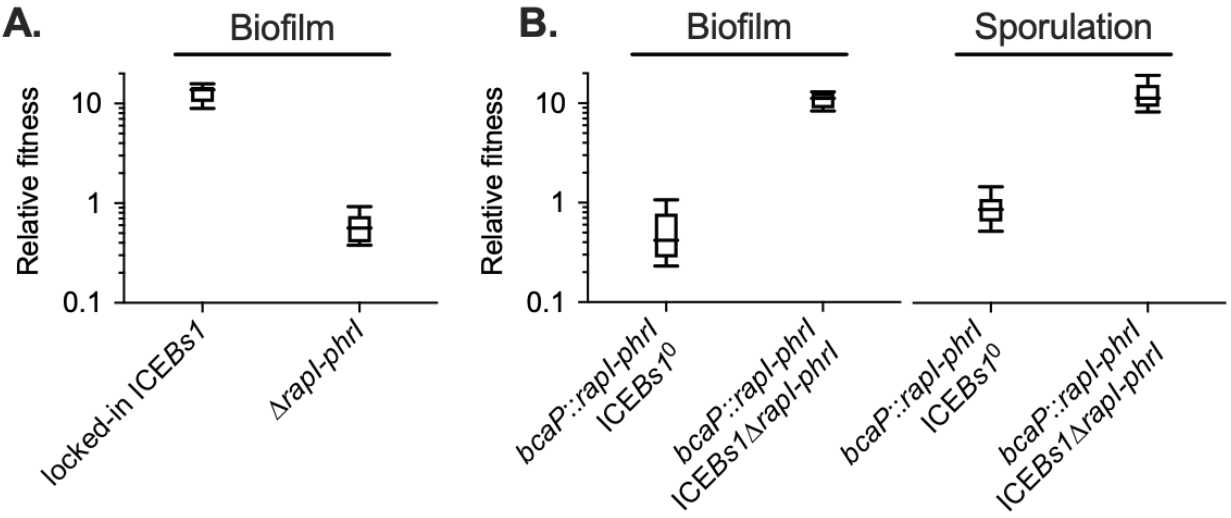

Figure 3. The ICE*Bs1* cell-cell signaling genes, *rapI-phrI*, are necessary but not sufficient to confer a selective advantage. (A) The fitness of cells containing locked-in ICE*Bs1* (JMJ646) or an isogenic *rapI-phrI* mutant (JMJ686) was measured relative to ICE*Bs1*-cured cells (JMJ550) during biofilm competitions. The ICE*Bs1*-containing cells were started at a frequency of 0.01. (B) The fitness of cells containing *rapI-phrI* alone (JMJ576) or cells containing both *rapI-phrI* and locked-in ICE*Bs1*Δ*rapI-phrI* (JMJ785) was measured relative to ICE*Bs1*-cured cells (JMJ714) during biofilm and sporulation medium competitions. JMJ576 and JMJ785 were started at a frequency of 0.01. Data shown are pooled from 3 independent experiments with a total of 9 populations analyzed per strain mixture. Boxes extend from the lower to upper quartiles, and the middle line indicates the median fitness. Whiskers indicate the range of the fitness measurements.

289 The requirement for *rapI-phrI* could be due to a direct role for one of these, likely RapI, or an
290 indirect role in activating expression of ICE genes.

291 *rapI-phrI* are not sufficient in the absence of other ICE*Bs1* genes to provide a fitness benefit.
292 We found that *rapI-phrI* alone were not sufficient to provide a fitness benefit during sporulation
293 or during sporulation in biofilms. We cloned *rapI-phrI* and their native promoters and inserted
294 them in an ectopic locus (*bcaP*) in a strain that did not contain ICE*Bs1*. When this strain was
295 started at a low frequency (~0.01), fitness of this strain was neutral relative to a control strain
296 without *rapI-phrI* (Fig. 3B). To verify that *rapI-phrI* were functional, we added back ICE*Bs1*
297 that was missing *rapI-phrI*. Adding the rest of ICE*Bs1* restored the fitness advantage during
298 sporulation and in biofilms, indicating that the ectopic copy of *rapI-phrI* was functional (Fig.
299 3B). The requirement for *rapI-phrI* and some other ICE*Bs1* gene(s) indicated that the selective
300 advantage was likely dependent on induction of ICE*Bs1* by RapI.

301 Activation of ICE*Bs1* is required for the fitness benefit. We found that expression of one or
302 more ICE*Bs1* genes controlled by the promoter P*xis* was required for the selective advantage in
303 biofilms with sporulation. P*xis* drives most of the genes in ICE*Bs1* and is indirectly activated by
304 RapI in a frequency-dependent manner (Auchtung *et al*., 2005; Bose and Grossman, 2011). We
305 deleted P*xis* in a strain in which ICE*Bs1* was unable to excise or replicate (locked-in-ICE*Bs1*). In
306 this strain, only genes not dependent on P*xis* could be expressed, including *rapI-phrI*. Fitness of
307 this strain was approximately neutral during sporulation in biofilms (Fig. 4B). This indicated that
308 expression of one or more genes controlled by P*xis*, either alone or in combination with *rapI*,
309 was required for the fitness benefit conferred by ICE*Bs1*.

310 Since most of the genes controlled by P*xis* have known roles in the conjugative life cycle, we
311 focused our search on genes without a known function, starting with the genes near P*xis*. Of

312 these, we found that a deletion of *devI* (*ydcO*) reduced fitness. Results described below
313 demonstrate that a single ICE*Bs1* gene, *devI* (*ydcO*), is both necessary and sufficient to inhibit
314 development and provide a selective advantage. The primary role of *rapI* in the fitness benefit
315 appears to be the induction of *devI* expression.

316 ***devI* is necessary for the fitness benefit conferred by ICE*Bs1***

317 We found that an ICE*Bs1* gene of unknown function, *devI* (*ydcO*), was necessary for the
318 fitness advantage of ICE*Bs1* host cells. We constructed a deletion of *devI* in the locked-in-
319 ICE*Bs1* strain. When started at a low frequency in the population (~0.01) the relative fitness of
320 the *devI* mutant was approximately 3.5 (Fig. 4D), much less than that of the isogenic *devI*+ cells
321 (median fitness ~14) in biofilms with sporulation (Fig. 4A). Interestingly, the deletion of *devI* did
322 not reduce fitness fully to neutral, indicating a possible role for other ICE*Bs1* genes.

323 *devI* (*ydcO*) is predicted to encode an 86 amino acid protein. A search for conserved motifs
324 and structural similarity between DevI (YdcO) and other proteins did not significantly inform
325 our understanding of DevI function. However, *devI* (*ydcO*) homologs are found in other *Bacillus*
326 species (see below).

327 ***devI* is sufficient to inhibit sporulation and provide a fitness benefit**

328 We found that when expressed constitutively, *devI* alone, in the absence of all other ICE*Bs1*
329 genes, was sufficient to inhibit sporulation and provide a selective advantage. We cloned *devI*
330 under the control of P*xis* at an ectopic locus (*lacA*) in a strain without ICE*Bs1*. In the absence of
331 ICE*Bs1* (and its repressor ImmR), P*xis* is constitutively active (Auchtung *et al*., 2007). Fitness
332 was measured relative to a control strain that had P*xis* with no gene downstream.

333

334

335

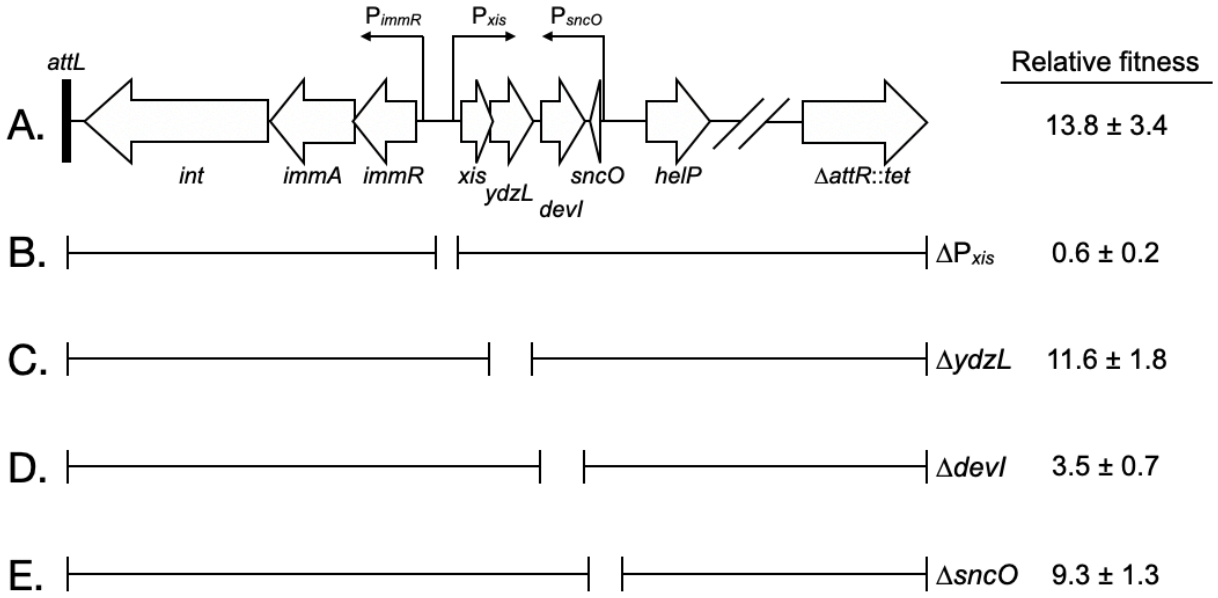

Figure 4. Effects of deletions in ICE*Bs1* on host fitness. (A) Abbreviated genetic map of locked-in-ICE*Bs1* showing genes as open block arrows, promoters as thin right-angle arrows, and the left attachment site (*attL*) as a black bar. (B to E) Brackets under the map of ICE*Bs1* indicate regions contained in isogenic derivatives of locked-in-ICE*Bs1*. Open spaces represent regions deleted. The fitness of strains containing locked-in-ICE*Bs1* (JMJ646) and its derivatives (ΔP*xis*, JMJ662; Δ*ydzL*, JMJ704; Δ*devI*, JMJ703; Δ*sncO*, JMJ688) is indicated at the right. Fitness was measured relative to ICE*Bs1*-cured cells (JMJ550) during competitions in biofilms. ICE*Bs1*-containing cells were started at a frequency of 0.01. Data shown are the median ± standard deviation from at least 3 independent experiments (at least 9 total competitions per strain mixture), with the exception of JMJ688 which was measured only in 1 experiment (3 total competitions).

336 Sporulation of the P*xis-devI* strain was strongly inhibited under conditions that normally
337 support robust sporulation, including in biofilms (Fig. 5). During sporulation either with (Fig.
338 5A) or without biofilm formation (Fig. 5B), the frequency of the P*xis-devI* strain in the
339 population rose from ~0.01 to ~0.05, giving a relative fitness of ~5. This is greater than the
340 typical fitness conferred by ICE*Bs1* in biofilms, but less than that observed during sporulation
341 without biofilms. We suspect these differences are due to constitutive expression of *devI* in the
342 absence of ICE*Bs1*'s regulatory systems and the earlier onset of starvation on DSM agar
343 compared to MSgg agar; cells that are unable to sporulate eventually die.

344 **DevI likely targets the developmental transcription factor Spo0A**

345 Results described above demonstrated that *devI* is a robust inhibitor of sporulation.
346 Sporulation is controlled by the transcription factor Spo0A, which both directly and indirectly
347 regulates the expression of many genes needed for development, including biofilm formation.
348 The results described below indicate that DevI most likely targets Spo0A.

349 <u>*devI* inhibits early sporulation gene expression.</u> We found that *devI* inhibits expression of
350 genes normally activated early during sporulation. Sporulation is initiated when Spo0A~P
351 directly stimulates transcription of several genes, including the three sporulation operons, *spoIIA,*
352 *spoIIE,* and *spoIIG* (Sonenshein, 2000). Using *lacZ* fusions to the promoters of each of these
353 operons, we found that P*xis-devI* inhibited activity of each promoter compared to wild-type
354 during sporulation in liquid sporulation medium (Fig. 6A). This indicates that DevI inhibits the
355 initiation of sporulation.

356 <u>*devI* inhibits biofilm gene expression.</u> We also found that *devI* inhibits expression of genes
357 needed for extracellular matrix production during biofilm formation. We measured expression of

358

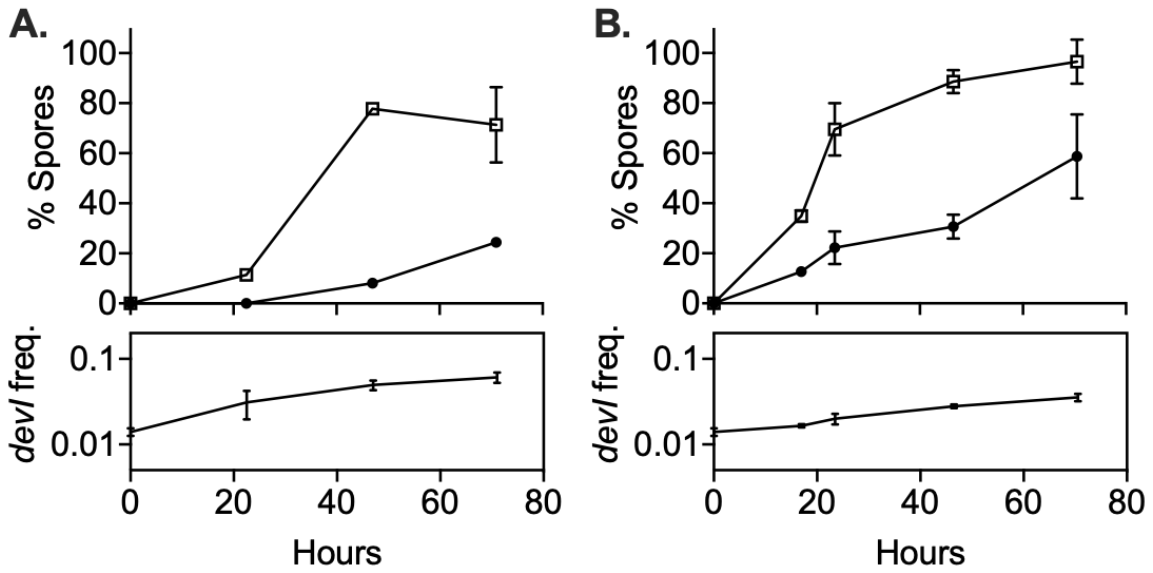

Figure 5. *devI* alone is sufficient to inhibit sporulation and provide a selective advantage. ICE*Bs1*-cured cells that constitutively express *devI* (JMJ725, black circles) were mixed at an initial frequency of 0.01 with ICE*Bs1*-cured cells containing an empty expression construct (JMJ727, open squares). The mixture was spotted onto biofilm growth medium (A) or sporulation medium (B). Biofilms and colonies were harvested at the indicated times to determine the fraction of CFUs derived from heat-resistant spores for both the *devI*-containing and control cells. Boxes below each graph indicate the frequency of *devI*-containing CFUs at each timepoint. Data shown are the average from two populations per timepoint with error bars indicating the standard deviation.

359 biofilm matrix genes *epsB* and *tasA* by RT-qPCR with primers internal to each gene. In early
360 stationary phase in liquid biofilm medium, transcript levels of *epsB* and *tasA* were reduced by
361 about 5-fold and 3-fold, respectively, in the P*xis-devI* strain compared to wild-type (Fig. 6B). We
362 suspect that inhibition of biofilm matrix genes, in addition to delaying sporulation, is an
363 important mechanism of selection for ICE*Bs1* host cells during growth in a biofilm. This is
364 consistent with the selective advantage of ICE*Bs1* host cells in biofilms without sporulation
365 described earlier. Inhibition of biofilm and early sporulation genes is consistent with DevI
366 functioning as an inhibitor of Spo0A or its activation by phosphorylation.

367 ***devI* is conserved among ICEs homologous to ICE*Bs1***

368 We found that *devI* (*ydcO*) is conserved among *Bacillus* species and in many cases is located
369 within what appear to be ICEs similar to ICE*Bs1.* We used NCBI BLAST to search for
370 homologous protein sequences using both pBLAST (protein database) and tBLASTn (translated
371 nucleotide database). Homologs with 100% sequence coverage and greater than 70% identity to
372 YdcO from *B. subtilis* NCIB3610 were found in dozens of other *B. subtilis* strains and in closely
373 related species including *B. licheniformis, B. atrophaeus,* and *B. amyloliquefaciens.* Excluding
374 *Bacillus* species from the searches to possibly identify more distantly related proteins with
375 known functions produced no hits.

376 We analyzed the sequence surrounding the *devI* (*ydcO*) homologs identified to determine if
377 there is similarity to ICE*Bs1*. All of the *devI* (*ydcO*) homologs appear to be within mobile
378 element regions similar to ICE*Bs1*, though some are clearly missing genes present in ICE*Bs1*.
379 Although we cannot infer whether any of these regions are functional mobile elements, we
380 suspect that the ability to inhibit host development may be a conserved strategy among ICE*Bs1*-
381 like elements and possibly other ICEs with cargo genes of unknown function.

382

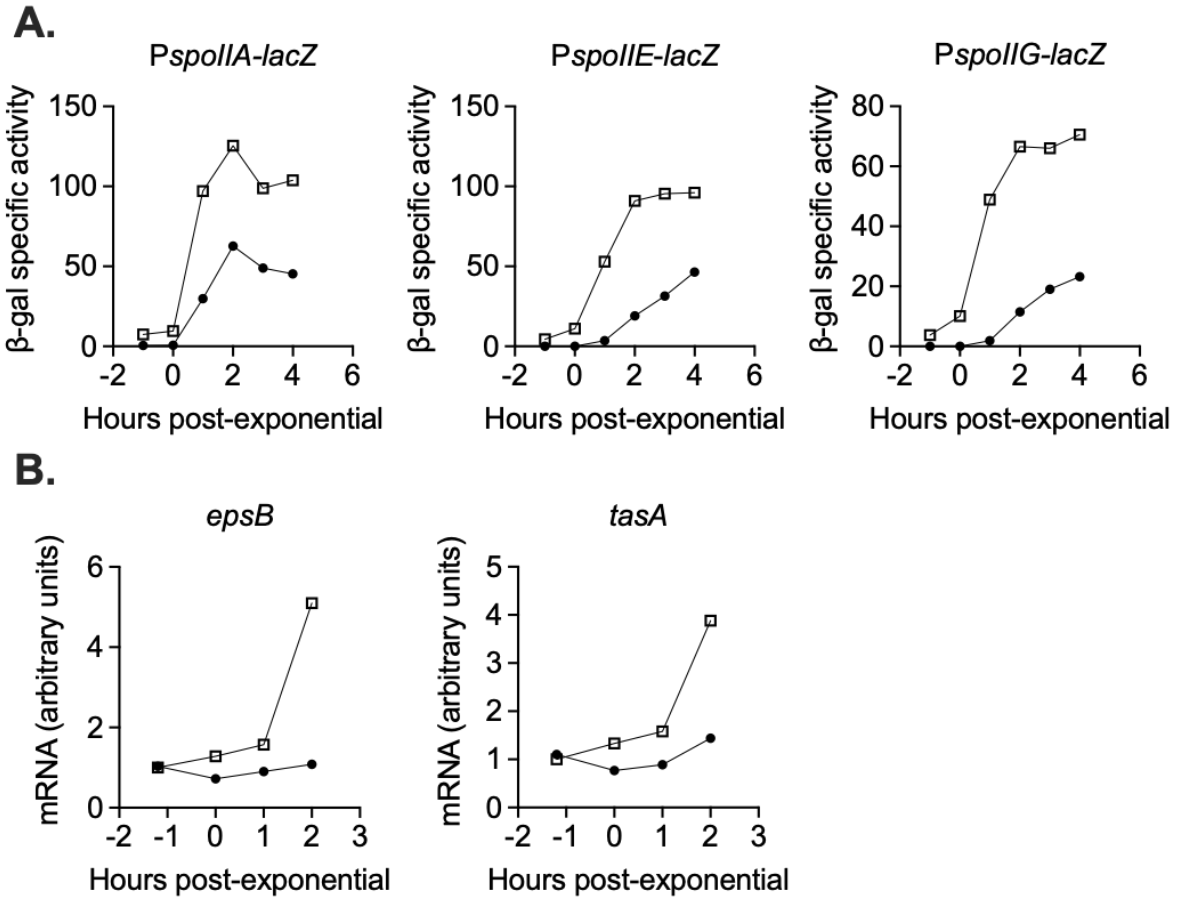

Figure 6. *devI* inhibits expression of genes associated with sporulation initiation and biofilm formation. (A) ICE*Bs1*-cured cells that constitutively express *devI* (black circles) or contain an empty expression construct (open squares) were grown in liquid sporulation medium. Cells were harvested at the indicated times and β-galactosidase specific activity was measured. Strains: P*spoIIA-lacZ* P*xis-devI* (JMJ732), P*spoIIA-lacZ* WT (JMJ735), P*spoIIE-lacZ* P*xis-devI* (JMJ731), P*spoIIE-lacZ* WT (JMJ734), P*spoIIG-lacZ* P*xis-devI* (JMJ733), P*spoIIG-lacZ* WT (JMJ736). A representative experiment is shown. (B) ICE*Bs1*-cured cells that constitutively express *devI* (JMJ725, black circles) and ICE*Bs1*-cured cells containing an empty expression construct (JMJ727, open squares) were grown in liquid biofilm medium, and cells were harvested at the indicated times. cDNA was synthesized using reverse transcriptase and RT-qPCR was used to measure expression of biofilm-associated genes *epsB* and *tasA*. The transcript copy numbers of these genes were measured relative to a housekeeping gene *gyrA*. The data reported are the average of three technical replicates from one experiment. The relative expression levels are normalized to wild-type at T_{-1}. A representative experiment is shown.

383 **Discussion**

384 Our work demonstrates that ICE*Bs1* confers a selective advantage on its host cells by
385 delaying biofilm and spore development, enabling the host to grow more than cells without
386 ICE*Bs1*. When ICE*Bs1*-containing cells are the minority in a mixed population, ICE*Bs1* genes
387 are induced. One of these genes, *devI*, is necessary and sufficient to inhibit biofilm- and
388 sporulation-associated gene expression, likely by inhibiting the key developmental regulator
389 Spo0A. Together with previous findings we conclude that ICE*Bs1* encodes at least three distinct
390 strategies to benefit its host cells. 1) Inhibition of development (described here) provides a
391 growth advantage in biofilms and during sporulation. 2) Exclusion, mediated by *yddJ*, blocks the
392 conjugation machinery and protects the host cell from lethal excessive transfer (Avello *et al*.,
393 2019). 3) An abortive infection mechanism, mediated by *spbK* (*yddK*) protects populations of
394 ICE*Bs1* host cells from predation by the lysogenic phage SPβ (Johnson *et al*., 2020, manuscript
395 in preparation). We propose that all three strategies provide a competitive advantage for ICE*Bs1*
396 and its host cells in different conditions.

397 We show that *devI* reduces biofilm matrix expression and delays the initiation of sporulation.
398 Matrix production may act as a public good, benefiting the whole community (Dragoš *et al*.,
399 2018). Avoidance of matrix production can therefore be considered an exploitative behavior.
400 Exploitation can be detrimental to the population as a whole (Smith and Schuster, 2019), but we
401 did not observe any negative effects on populations under conditions where ICE*Bs1* host cells
402 had an advantage. This is in agreement with the facultative nature of ICE*Bs1* cheating (Even-Tov
403 *et al*., 2016; Pollak *et al*., 2016). Quorum-sensing by *rapI-phrI* ensures that ICE*Bs1* cheats only
404 as a minority, where its impact on total public goods levels is negligible. Interestingly, the pBS32
405 plasmid utilizes direct regulation of biofilm formation by a Rap receptor to its benefit (Bendori *et*

406 *al*., 2015; Pollak *et al*., 2015), while in ICE*Bs1* this regulation was moved from the Rap receptor
407 to one of its regulated genes.

408 The fitness consequences of sporulation inhibition are complicated (Mutlu *et al*., 2018).
409 Delaying sporulation too long would result in a loss of viability of the starved cells. Inhibition of
410 sporulation by ICE*Bs1* appears to be transient; ICE*Bs1* host cells eventually sporulate and do not
411 lose significant viability as a consequence of delaying sporulation. Regulation of *devI* expression
412 by cell-cell signaling is likely critical for transient developmental inhibition. During competitions
413 in liquid biofilm medium, we observed a loss of ICE*Bs1* host viability when cultures were
414 vigorously mixed, but not when mixing was reduced to allow cells to aggregate (data not
415 shown). Some population structure is likely needed to allow sufficient PhrI accumulation to turn
416 off ICE*Bs1* activation and permit sporulation prior to death.

417 **ICE*Bs1* stability during sporulation**

418 We hypothesize that in addition to providing a fitness advantage to its host cell, delaying
419 sporulation may also improve stability of ICE*Bs1* in the host during development. Sporulation
420 involves the formation of an asymmetric division septum generating the larger mother cell and
421 the smaller forespore (Errington, 2001; Higgins and Dworkin, 2012). Sporulation is induced
422 when cells are at a high population density and running out of nutrients, conditions that also
423 activate ICE*Bs1* (Auchtung *et al*., 2005; Grossman and Losick, 1988). The plasmid form of
424 ICE*Bs1* that is generated after excision from the chromosome is not known to have a mechanism
425 for active partitioning and is more likely to remain in the larger mother cell if the cells do enter
426 the sporulation pathway and divide asymmetrically. Therefore, the ability of ICE*Bs1* to delay the
427 initiation of sporulation under conditions where the element is activated could help prevent loss
428 of the element and maintain ICE*Bs1* in host cells.

429 Mobile genetic elements employ various strategies to promote their maintenance during
430 sporulation. Rates of curing during sporulation for various plasmids in *Bacillus* species vary
431 widely and do not necessarily correlate with their stability during normal cell division (Tokuda *et*
432 *al*., 1993; Turgeon *et al*., 2008). Mechanisms encoded by plasmids to promote their stability
433 during growth and sporulation include the production of dynamic cytoskeletal filaments (Becker
434 *et al*., 2006) and post-segregational killing of plasmid-cured pre-spores with toxin-antitoxin
435 systems (Short *et al*., 2015). Interestingly, even lytic phage genomes can be incorporated into
436 spores (first described in the 1960s) by co-opting the host's chromosomal partitioning system
437 (Meijer *et al*., 2005).

438 **Diversity of cargo genes and associated phenotypes**

439 Mobile genetic elements, especially ICEs, are widespread in bacteria (Frost *et al*., 2005;
440 Guglielmini *et al*., 2011). Many known mobile genetic elements encode cargo genes that confer
441 easily recognizable phenotypes, notably antibiotic resistance. Other cargo genes provide less
442 obvious phenotypes but still fundamentally alter the physiology of the host cell. A large (500-kb)
443 ICE was discovered in *Mesorhizobium loti* because its horizontal transfer conferred the ability to
444 form nitrogen-fixing symbiotic rood nodules on *Lotus* plant species (Sullivan and Ronson, 1988).
445 In many pathogens, cargo genes in mobile elements are largely responsible for virulence. For
446 example, *Vibrio cholerae* is capable of a pathogenic lifestyle in human hosts due to the toxin-
447 encoding phage CTXΦ (Waldor and Mekalanos, 1996). In the sporulating pathogen *Bacillus*
448 *anthracis*, mobile genetic elements regulate both virulence and host development. Two plasmids,
449 pXO1 and pXO2, provide the genes for toxin synthesis and production of a protective capsule,
450 respectively (Green *et al*., 1985; Mikesell *et al*., 1983). pXO1 also contains a regulatory gene,
451 *atxA*, that regulates virulence factor production and inhibits host cell sporulation (Dale *et al*.,

452 2018). Co-regulation of virulence factors and sporulation is likely important during infection, as
453 *B. anthracis* spores are thought to be more susceptible than vegetative cells to eradication by the
454 immune system (Mock and Fouet, 2001).

455 Mobile elements are also known to alter the host's interaction with other horizontally
456 acquired DNA, which has implications for the fitness and evolvability of the host. For example,
457 the plasmid pBS32 in *B. subtilis* encodes an inhibitor of the host's DNA uptake machinery,
458 blocking natural transformation (Konkol *et al*., 2013). Interestingly, genes with roles in defense
459 against foreign DNA, CRISPR-Cas systems, are also identified within mobile elements (Faure *et*
460 *al*., 2019; McDonald *et al*., 2019; Millen *et al*., 2012). Competition between mobile elements not
461 only shapes the repertoire of cargo genes in a given cell, but it may also protect the host from
462 harmful elements.

463 Many mobile genetic elements have been identified bioinformatically from genome
464 sequences or discovered by means other than the phenotypes they provide (Bi *et al.*, 2012;
465 Guglielmini *et al.*, 2011; Johnson and Grossman, 2015). Many elements lack obvious cargo
466 genes, or at least lack cargo genes that have recognizable functions (Cury *et al*., 2017). We
467 suspect that many elements with uncharacterized cargo genes provide important traits to their
468 hosts beyond the scope of the phenotypes currently attributed to mobile elements. Though
469 mobile genetic elements can have remarkably broad host ranges, such as the Tn*916*-Tn*1545*
470 group of ICEs (Clewell *et al.*, 1995; Roberts and Mullany, 2009) and the IncP-1 group of
471 plasmids (Popowska and Krawczyk-Balska, 2013), cargo genes and their associated functions
472 could be highly specific to certain hosts.

473 Characterization of unknown cargo genes is likely to expand the diversity of traits currently
474 attributed to mobile genetic elements. We speculate that many of these genes modulate normal

475 host functions rather than provide entirely new phenotypes. Understanding cargo gene function
476 is critical for understanding interactions between and co-evolution of mobile elements and their
477 hosts.

478 **Methods and Materials**

479 Media and growth conditions

480 Prior to competition experiments, cells were grown as light lawns for approximately 20 hours
481 at room temperature on 1.5% agar plates containing 1% w/v glucose, 0.1% w/v monopotassium
482 glutamate, and 1x Spizizen's salts (2 g/l $(NH_4)SO_4$, 14 g/l K_2HPO_4, 6 g/l KH_2PO_4, 1 g/l
483 Na_3citrate-$2H_2O$, and 0.2 g/l $MgSO_4$-$7H_2O$) (Harwood and Cutting, 1990). Cells were
484 resuspended from light lawns and grown at 37ºC with shaking in $S7_{50}$ defined minimal medium
485 (Jaacks *et al*., 1989) with 1% w/v glucose and 0.1% w/v monopotassium glutamate. Biofilms
486 were grown at 30ºC on MSgg agar plates (as defined in Branda *et al*., 2001 with the exception of
487 tryptophan and phenylalanine, which we did not include). The sporulation medium used was
488 DSM (in liquid form or as plates solidified with 1.5% agar) (Harwood and Cutting, 1990). MSgg
489 agar and DSM agar plates were dried for 20-24 hours at 37ºC prior to use. Antibiotics were used
490 at the following concentrations for selection on LB agar plates: chloramphenicol (5 µg/ml),
491 kanamycin (5 µg/ml), spectinomycin (100 µg/ml), tetracycline (12.5 µg/ml), and a combination
492 of erythromycin (0.5 µg/ml) and lincomycin (12.5 µg/ml) to select for macrolide-lincosamide-
493 streptogramin (MLS) resistance.

494 Strains and alleles

495 The *B. subtilis* strains used are listed in Table 2. The strain background used in all
496 experiments was a derivative of the undomesticated strain NCIB3610 lacking its endogenous
497 plasmid pBS32 (NCIB3610 plasmid-free). ICE*Bs1*^{0} indicates the strain is cured of ICE*Bs1*.

498 Standard techniques were used for cloning and strain construction (Harwood and Cutting 1990).
499 Some alleles were previously described and are summarized below. Variants of ICE*Bs1* that
500 were blocked for transfer contained the *conEK476E* mutation derived from MMB1118 (Berkmen
501 *et al*., 2010). The *spo0A*Δ*Ps* allele was derived from AG1242 (Siranosian and Grossman, 1994).
502 The *amyE*::P*spoIIA-lacZ cat* allele was derived from KI938 (Chung *et al*., 1994). Essentially
503 identical alleles with P*spoIIE* and P*spoIIG* were also used.

504 Construction of selective markers for mating and competition experiments. ICE*Bs1* was
505 marked with the *cat* gene (conferring chloramphenicol resistance) between the divergently
506 transcribed genes *yddJ* and *spbK* (*yddK*). Markers used to select ICE*Bs1*-containing and ICE*Bs1*^{0}
507 cells were all integrated at *lacA* and contained *spec* (spectinomycin resistance), *mls* (macrolide-
508 lincosamide-streptogramin resistance), or *kan* (kanamycin resistance). The *mls* and *kan*
509 constructs also contained constitutively expressed fluorescent proteins BFP and RFP,
510 respectively. The plating efficiency of all markers was verified, and control competitions
511 (described below) were performed to measure marker-associated fitness effects.

512 Construction of ICE*Bs1* mutants. Fitness measurements of ICE*Bs1* mutants were performed
513 in a version of ICE*Bs1* unable to excise and replicate (locked-in ICE*Bs1*). All mutants were
514 isogenic to JMJ646 (ICE*Bs1* oriT* Δ*attR*::*tet*), which is unable to excise due to the *attR*::*tet*
515 deletion (Lee and Grossman, 2007). The origin of transfer was mutated (oriT*) to prevent
516 ICE*Bs1* replication while integrated, which is detrimental (Lee and Grossman, 2007; Menard and
517 Grossman, 2013). The markerless oriT* mutation was constructed by cloning *nicK*(oriT*) from
518 pJT245 and ~1 kb of upstream sequence into pCAL1422 (a plasmid that contains *E. coli lacZ*) by
519 isothermal assembly (Gibson *et al*., 2009), essentially as previously described (Thomas *et al*.,
520 2013). The resulting plasmid, pJMJ196, was integrated into the chromosome by single-crossover

521 recombination. Transformants were screened for loss of *lacZ*, indicating loss of the integrated
522 plasmid, and PCR was used to identify a clone containing the oriT* allele. Markerless deletions
523 of ICE*Bs1* sequence were also generated using pCAL1422-derived plasmids. The *rapI-phrI*
524 deletion was generated using pJMJ430 and removes the *rapI* and *phrI* ORFs. The P*xis* deletion
525 was generated using pJMJ199 and removes sequence from 149 bp to 27 bp upstream of the *xis*
526 ORF. This removes the presumed -35 and -10 of the promoter but does not remove the known
527 regulatory sites at the neighboring *immR* promoter (Auchtung *et al*., 2007). The *ydzL* deletion
528 was generated using pELS5 and fuses the first four and last two codons of *ydzL*. The *devI*
529 deletion was generated using pELS1 and fuses the first four and last two codons of *devI*. The
530 *sncO* deletion was generated using pELC815 and removes the *sncO* gene and 44 bp of upstream
531 sequence.

532 Construction of ectopic *rapI-phrI* construct. The *rapI-phrI* ORFs plus the promoter region
533 (352 bp upstream of *rapI*) and 112 bp of downstream sequence were cloned into pMMH253
534 (vector for integration at *bcaP*). The resulting plasmid (pJMJ354) was linearized and introduced
535 to *B. subtilis* by transformation and selection for kanamycin resistance. The corresponding empty
536 control construct was generated by transforming linearized pMMH253.

537 Construction of *lacA*::P*xis-devI*. We expressed *devI* from the P*xis* promoter by cloning
538 existing elements from a P*xis* gene expression construct marked with *mls* at *lacA* and inserting
539 the *devI* ORF by isothermal assembly. The resulting product was introduced to the chromosome
540 by transformation and selection for MLS resistance. The P*xis*-empty control strain contains an
541 identical construct lacking an ORF fused to P*xis*.

542 Biofilm mating experiments

543 Cultures were started from resuspended light lawns (described above) diluted to an initial
544 OD600 of 0.05 in $S7_{50}$ minimal medium. Cultures were grown to mid-exponential phase (OD600
545 ~0.5) at 37ºC with shaking. Cells were pelleted, resuspended in 1x Spizizen's salts, and diluted
546 to an OD600 of 0.01. Donor and recipient strains were mixed at the indicated frequencies and 50
547 µl of the mixture was spotted onto the center of MSgg agar plates. Spots were allowed to dry at
548 30ºC before flipping the plates. Plates were incubated at 30ºC for 4 days. At the time of
549 inoculation, the strain mixes were diluted and plated on LB agar plates containing the
550 appropriate antibiotics to determine the initial CFU/ml of the donor and recipient strains. After 4
551 days, the mature biofilms were scraped from the agar surface with sterile wooden sticks and
552 resuspended in 5 ml 1x Spizizen's salts, followed by mild sonication to disperse the cells. Cells
553 were diluted and selectively plated to determine the final CFU/ml of transconjugants.

554 Competition experiments

555 Cells were prepared for competition experiments as described above for biofilm mating
556 experiments. Strain mixtures at the indicated frequencies were spotted onto MSgg agar plates for
557 biofilm competitions and DSM agar plates for sporulation competitions. Plates were incubated at
558 30ºC for 4 days unless otherwise indicated. Biofilms/colonies were collected, disrupted, and
559 plated as described above. For time-course competitions, two replicate biofilms/colonies were
560 collected at each of the indicated times. Sporulation frequency was determined by selective
561 plating before and after a heat treatment at 85ºC for 20 minutes to enumerate total CFUs and
562 CFUs derived from heat-resistant spores. Relative fitness of ICE*Bs1*-containing cells over
563 ICE*Bs1*^{0} cells was determined as $(p_f/(1-p_f))/(p_i/(1-p_i))$, where p_f, p_i are the frequencies of
564 ICE*Bs1*-containing cells in the final and initial populations, respectively. Control competitions
565 between ICE*Bs1*-cured cells were performed to determine the fitness associated with the

566 *lacA*::{Pveg-*mTagBFP mls*} marker (JMJ574) used in ICE*Bs1*-containing cells relative to the
567 *lacA*::{Ppen-*mApple2 kan*} marker used in ICE*Bs1*-null cells (JMJ550). When the *mls*-marked
568 cells were started at a frequency of 0.01, their relative fitness was 0.7 ± 0.09 (average and
569 standard deviation from 3 independent experiments and a total of 9 biofilms).

570 Gene expression assays

571 Expression of sporulation genes was measured in cultures grown from single colonies in
572 liquid DSM at 37º with shaking. Cells were harvested at the indicated timepoints. For β-
573 galactosidase assays, growth was stopped by the addition of toluene (~1.5% final concentration).
574 β-galactosidase specific activity ({ΔA_{420} per minute per ml of culture per OD_{600}} x 1000) was
575 measured as described (Miller, 1972) after pelleting cell debris.

576 Biofilm gene expression was measured in cultures grown from single colonies in liquid
577 MSgg at 37º with shaking. For RT-qPCR assays, cells were harvested directly into ice-cold
578 methanol (1:1 methanol to culture volume) and pelleted. RNA was isolated using Qiagen
579 RNeasy PLUS kit with 10 mg/ml lysozyme. iScript Supermix (Bio-Rad) was used for reverse
580 transcriptase reactions to generate cDNA. Control reactions without reverse transcriptase were
581 performed to assess the amount of DNA present in the RNA samples. RNA was degraded by
582 adding 75% volume of 0.1 M NaOH and incubating at 70ºC for 10 minutes, followed by
583 neutralization with an equal volume of 0.1 M HCl. qPCR was done using SSoAdvanced SYBR
584 master mix and CFX96 Touch Real-Time PCR system (Bio-Rad). Primers used to measure *epsB*
585 were oJJ363 (5'-CGGAACAATATCGCACCATTC-3') and oJJ364 (5'-
586 CGCTGCACTGAACGATTTAC-3'). Primers used to quantify *tasA* were oJJ367 (5'-
587 GGATCACTTGCGATCAAAGAAG-3') and oJJ368 (5'-CTTCAAACTGGCTGAGGAAATC-
588 3'). Primers used to measure the control locus *gyrA* were oMEA128 (5'-

589 TGGAGCATTACCTTGACCATC-3') and oMEA129 (5'-AGCTCTCGCTTCTGCTTTAC-3').
590 The relative transcript copy numbers (as indicated by the Cp values measured by qPCR) of *epsB*
591 and *tasA* were normalized to *gyrA* after subtracting the signal from control reactions without
592 reverse transcriptase.
593

594 **Table 2: *B. subtilis* strains used[1]**

Strain	Relevant genotype
JMJ550	ICE*Bs1*^{0} *lacA*::{Ppen-*mApple2 kan*}
JMJ574	ICE*Bs1*^{0} *lacA*::{Pveg-*mTagBFP mls*}
JMJ576	ICE*Bs1*^{0} *bcaP*::{P*rapI-rapIphrI kan*} *lacA*::{Pveg-*mTagBFP mls*}
JMJ592	ICE*Bs1 yddJ-cat-yddK lacA*::{Pveg-*mTagBFP mls*}
JMJ593	ICE*Bs1 conEK476E yddJ-cat-yddK lacA*::{Pveg-*mTagBFP mls*}
JMJ646	ICE*Bs1* oriT* *attR*::*tet lacA*::{Pveg-*mTagBFP mls*}
JMJ662	ICE*Bs1* ΔP*xis* oriT* *attR*::*tet lacA*::{Pveg-*mTagBFP mls*}
JMJ686	ICE*Bs1* oriT* Δ*rapIphrI attR*::*tet lacA*::{Pveg-*mTagBFP mls*}
JMJ688	ICE*Bs1* oriT* Δ*sncO attR*::*tet lacA*::{Pveg-*mTagBFP mls*}
JMJ703	ICE*Bs1* oriT* Δ*devI attR*::*tet lacA*::{Pveg-*mTagBFP mls*}
JMJ704	ICE*Bs1* oriT* Δ*ydzL attR*::*tet lacA*::{Pveg-*mTagBFP mls*}
JMJ714	ICE*Bs1*^{0} *lacA*::*spec bcaP*::*kan*
JMJ725	ICE*Bs1*^{0} *lacA*::{P*xis-devI mls*}
JMJ727	ICE*Bs1*^{0} *lacA*::{P*xis*-empty *mls*}
JMJ731	ICE*Bs1*^{0} *lacA*::{P*xis-devI mls*} *amyE*::{P*spoIIE-lacZ cat*}
JMJ732	ICE*Bs1*^{0} *lacA*::{P*xis-devI mls*} *amyE*::{P*spoIIA-lacZ cat*}
JMJ733	ICE*Bs1*^{0} *lacA*::{P*xis-devI mls*} *amyE*::{P*spoIIG-lacZ cat*}
JMJ734	ICE*Bs1*^{0} *lacA*::{P*xis*-empty *mls*} *amyE*::{P*spoIIE-lacZ cat*}
JMJ735	ICE*Bs1*^{0} *lacA*::{P*xis*-empty *mls*} *amyE*::{P*spoIIA-lacZ cat*}
JMJ736	ICE*Bs1*^{0} *lacA*::{P*xis*-empty *mls*} *amyE*::{P*spoIIG-lacZ cat*}
JMJ785	ICE*Bs1* oriT* Δ*rapIphrI attR*::*tet bcaP*::{P*rapI-rapIphrI kan*} *lacA*::{Pveg-*mTagBFP mls*}
JMJ786	ICE*Bs1*^{0} *spo0AΔPs lacA*::{Ppen-*mApple2 kan*}
JMJ788	ICE*Bs1 conEK476E yddJ-cat-yddK spo0AΔPs lacA*::{Pveg-*mTagBFP mls*}

[1]All strains derived from NCIB3610 plasmid-free

595

596

597

598

599

600

Acknowledgements

We thank Mary Anderson and Janet Smith for helpful comments on the manuscript.

References

Auchtung JM, Lee CA, Garrison KL, Grossman AD. 2007. Identification and characterization of the immunity repressor (ImmR) that controls the mobile genetic element ICEBs1 of Bacillus subtilis. *Molecular Microbiology* **64**:1515–1528. doi:10.1111/j.1365-2958.2007.05748.x

Auchtung JM, Lee CA, Monson RE, Lehman AP, Grossman AD. 2005. Regulation of a Bacillus subtilis mobile genetic element by intercellular signaling and the global DNA damage response. *Proc Natl Acad Sci USA* **102**:12554–12559. doi:10.1073/pnas.0505835102

Avello M, Davis KP, Grossman AD. 2019. Identification, characterization and benefits of an exclusion system in an integrative and conjugative element of Bacillus subtilis. *Molecular Microbiology* **112**:1066–1082. doi:10.1111/mmi.14359

Bai U, Mandic-Mulec I, Smith I. 1993. SinI modulates the activity of SinR, a developmental switch protein of Bacillus subtilis, by protein-protein interaction. *Genes Dev* **7**:139–148. doi:10.1101/gad.7.1.139

Baltrus DA. 2013. Exploring the costs of horizontal gene transfer. *Trends in Ecology & Evolution* **28**:489–495. doi:10.1016/j.tree.2013.04.002

Becker E, Herrera NC, Gunderson FQ, Derman AI, Dance AL, Sims J, Larsen RA, Pogliano J. 2006. DNA segregation by the bacterial actin AlfA during Bacillus subtilis growth and development. *The EMBO Journal* **25**:5919–5931. doi:10.1038/sj.emboj.7601443

Bendori SO, Pollak S, Hizi D, Eldar A. 2015. The RapP-PhrP Quorum-Sensing System of Bacillus subtilis Strain NCIB3610 Affects Biofilm Formation through Multiple Targets, Due to an Atypical Signal-Insensitive Allele of RapP. *Journal of Bacteriology* **197**:592–602. doi:10.1128/JB.02382-14

Berkmen MB, Lee CA, Loveday E-K, Grossman AD. 2010. Polar Positioning of a Conjugation Protein from the Integrative and Conjugative Element ICEBs1 of Bacillus subtilis. *Journal of Bacteriology* **192**:38–45. doi:10.1128/JB.00860-09

637 Bi D, Xu Z, Harrison EM, Tai C, Wei Y, He X, Jia S, Deng Z, Rajakumar K, Ou H-Y. 2012.
638 ICEberg: a web-based resource for integrative and conjugative elements found in Bacteria.
639 *Nucleic Acids Res* **40**:D621–D626. doi:10.1093/nar/gkr846
640
641 Bose B, Auchtung JM, Lee CA, Grossman AD. 2008. A conserved anti-repressor controls
642 horizontal gene transfer by proteolysis. *Molecular Microbiology* **70**:570–582.
643 doi:10.1111/j.1365-2958.2008.06414.x
644
645 Bose B, Grossman AD. 2011. Regulation of Horizontal Gene Transfer in Bacillus subtilis by
646 Activation of a Conserved Site-Specific Protease. *Journal of Bacteriology* **193**:22–29.
647 doi:10.1128/JB.01143-10
648
649 Branda SS, Gonzalez-Pastor JE, Ben-Yehuda S, Losick R, Kolter R. 2001. Fruiting body
650 formation by Bacillus subtilis. *Proceedings of the National Academy of Sciences* **98**:11621–
651 11626. doi:10.1073/pnas.191384198
652
653 Burrus V, Pavlovic G, Decaris B, Guédon G. 2002. The ICESt1 element of Streptococcus
654 thermophilus belongs to a large family of integrative and conjugative elements that exchange
655 modules and change their specificity of integration. *Plasmid* **48**:77–97. doi:10.1016/s0147-
656 619x(02)00102-6
657
658 Carraro N, Burrus V. 2015. The dualistic nature of integrative and conjugative elements. *Mobile*
659 *Genetic Elements* **5**:98–102. doi:10.1080/2159256X.2015.1102796
660
661 Chung JD, Stephanopoulos G, Ireton K, Grossman AD. 1994. Gene expression in single cells of
662 Bacillus subtilis: evidence that a threshold mechanism controls the initiation of sporulation. *J*
663 *Bacteriol* **176**:1977–1984.
664
665 Clewell DB, Flannagan SE, Jaworski DD, Clewell DB. 1995. Unconstrained bacterial
666 promiscuity: the Tn916–Tn1545 family of conjugative transposons. *Trends in Microbiology*
667 **3**:229–236. doi:10.1016/S0966-842X(00)88930-1
668
669 Cury J, Touchon M, Rocha EPC. 2017. Integrative and conjugative elements and their hosts:
670 composition, distribution and organization. *Nucleic Acids Res* **45**:8943–8956.
671 doi:10.1093/nar/gkx607
672
673 Dale JL, Raynor MJ, Ty MC, Hadjifrangiskou M, Koehler TM. 2018. A Dual Role for the
674 Bacillus anthracis Master Virulence Regulator AtxA: Control of Sporulation and Anthrax Toxin
675 Production. *Front Microbiol* **9**. doi:10.3389/fmicb.2018.00482
676

677 Dawes IW, Mandelstam J. 1970. Sporulation of Bacillus subtilis in Continuous Culture. *Journal*
678 *of Bacteriology* **103**:529–535. doi:10.1128/JB.103.3.529-535.1970
679
680 Dragoš A, Kiesewalter H, Martin M, Hsu C-Y, Hartmann R, Wechsler T, Eriksen C, Brix S,
681 Drescher K, Stanley-Wall N, Kümmerli R, Kovács ÁT. 2018. Division of Labor during Biofilm
682 Matrix Production. *Current Biology* **28**:1903-1913.e5. doi:10.1016/j.cub.2018.04.046
683
684 Errington J. 2001. Septation and chromosome segregation during sporulation in Bacillus subtilis.
685 *Current Opinion in Microbiology* **4**:660–666. doi:10.1016/S1369-5274(01)00266-1
686
687 Even-Tov E, Bendori SO, Valastyan J, Ke X, Pollak S, Bareia T, Ben-Zion I, Bassler BL, Eldar
688 A. 2016. Social Evolution Selects for Redundancy in Bacterial Quorum Sensing. *PLOS Biology*
689 **14**:e1002386. doi:10.1371/journal.pbio.1002386
690
691 Faure G, Shmakov SA, Yan WX, Cheng DR, Scott DA, Peters JE, Makarova KS, Koonin EV.
692 2019. CRISPR–Cas in mobile genetic elements: counter-defence and beyond. *Nat Rev Microbiol*
693 **17**:513–525. doi:10.1038/s41579-019-0204-7
694
695 Franke AE, Clewell DB. 1981. Evidence for a chromosome-borne resistance transposon (Tn916)
696 in Streptococcus faecalis that is capable of "conjugal" transfer in the absence of a conjugative
697 plasmid. *J Bacteriol* **145**:494–502.
698
699 Frost LS, Leplae R, Summers AO, Toussaint A. 2005. Mobile genetic elements: the agents of
700 open source evolution. *Nat Rev Microbiol* **3**:722–732. doi:10.1038/nrmicro1235
701
702 Gibson DG, Young L, Chuang R-Y, Venter JC, Hutchison CA, Smith HO. 2009. Enzymatic
703 assembly of DNA molecules up to several hundred kilobases. *Nat Methods* **6**:343–345.
704 doi:10.1038/nmeth.1318
705
706 Green BD, Battisti L, Koehler TM, Thorne CB, Ivins BE. 1985. Demonstration of a capsule
707 plasmid in Bacillus anthracis. *Infection and Immunity* **49**:291–297. doi:10.1128/IAI.49.2.291-
708 297.1985
709
710 Grossman AD, Losick R. 1988. Extracellular control of spore formation in Bacillus subtilis.
711 *PNAS* **85**:4369–4373. doi:10.1073/pnas.85.12.4369
712
713 Guglielmini J, Quintais L, Garcillán-Barcia MP, de la Cruz F, Rocha EPC. 2011. The Repertoire
714 of ICE in Prokaryotes Underscores the Unity, Diversity, and Ubiquity of Conjugation. *PLoS*
715 *Genet* **7**:e1002222. doi:10.1371/journal.pgen.1002222
716

Hahn J, Roggiani M, Dubnau D. 1995. The major role of Spo0A in genetic competence is to downregulate abrB, an essential competence gene. *Journal of Bacteriology* **177**:3601–3605. doi:10.1128/jb.177.12.3601-3605.1995

Hamon MA, Lazazzera BA. 2001. The sporulation transcription factor Spo0A is required for biofilm development in Bacillus subtilis. *Molecular Microbiology* **42**:1199–1209. doi:10.1046/j.1365-2958.2001.02709.x

Hamon MA, Stanley NR, Britton RA, Grossman AD, Lazazzera BA. 2004. Identification of AbrB-regulated genes involved in biofilm formation by Bacillus subtilis. *Molecular Microbiology* **52**:847–860. doi:10.1111/j.1365-2958.2004.04023.x

Harwood, C.R., and Cutting, S.M. (1990). Molecular Biological Methods for Bacillus, John Wiley & Sons, Chichester, NY.

Higgins D, Dworkin J. 2012. Recent progress in Bacillus subtilis sporulation. *FEMS Microbiol Rev* **36**:131–148. doi:10.1111/j.1574-6976.2011.00310.x

Jaacks KJ, Healy J, Losick R, Grossman AD. 1989. Identification and characterization of genes controlled by the sporulation-regulatory gene spo0H in Bacillus subtilis. *J Bacteriol* **171**:4121–4129. doi:10.1128/jb.171.8.4121-4129.1989

Johnson CM, Grossman AD. 2015. Integrative and Conjugative Elements (ICEs): What They Do and How They Work. *Annu Rev Genet* **49**:577–601. doi:10.1146/annurev-genet-112414-055018

Johnson, C.M., Harden, M.M., Grossman, A.D. (2020) An integrative and conjugative element protects host cells from predation by a bacteriophage. Manuscript in preparation.

Kearns DB, Chu F, Branda SS, Kolter R, Losick R. 2005. A master regulator for biofilm formation by Bacillus subtilis. *Molecular Microbiology* **55**:739–749. doi:10.1111/j.1365-2958.2004.04440.x

Konkol MA, Blair KM, Kearns DB. 2013. Plasmid-Encoded ComI Inhibits Competence in the Ancestral 3610 Strain of Bacillus subtilis. *Journal of Bacteriology* **195**:4085–4093. doi:10.1128/JB.00696-13

Lécuyer F, Bourassa J-S, Gélinas M, Charron-Lamoureux V, Burrus V, Beauregard PB. 2018. Biofilm Formation Drives Transfer of the Conjugative Element ICEBs1 in Bacillus subtilis. *mSphere* **3**. doi:10.1128/mSphere.00473-18

757 Lee CA, Grossman AD. 2007. Identification of the Origin of Transfer (oriT) and DNA Relaxase
758 Required for Conjugation of the Integrative and Conjugative Element ICEBs1 of Bacillus
759 subtilis. *Journal of Bacteriology* **189**:7254–7261. doi:10.1128/JB.00932-07
760
761 Madsen JS, Burmølle M, Hansen LH, Sørensen SJ. 2012. The interconnection between biofilm
762 formation and horizontal gene transfer. *FEMS Immunol Med Microbiol* **65**:183–195.
763 doi:10.1111/j.1574-695X.2012.00960.x
764
765 McDonald ND, Regmi A, Morreale DP, Borowski JD, Boyd EF. 2019. CRISPR-Cas systems are
766 present predominantly on mobile genetic elements in Vibrio species. *BMC Genomics* **20**:105.
767 doi:10.1186/s12864-019-5439-1
768
769 Meijer WJ, Castilla-Llorente V, Villar L, Murray H, Errington J, Salas M. 2005. Molecular basis
770 for the exploitation of spore formation as survival mechanism by virulent phage ϕ29. *The EMBO*
771 *Journal* **24**:3647–3657. doi:10.1038/sj.emboj.7600826
772
773 Menard KL, Grossman AD. 2013. Selective Pressures to Maintain Attachment Site Specificity of
774 Integrative and Conjugative Elements. *PLoS Genet* **9**:e1003623.
775 doi:10.1371/journal.pgen.1003623
776
777 Mikesell P, Ivins BE, Ristroph JD, Dreier TM. 1983. Evidence for plasmid-mediated toxin
778 production in Bacillus anthracis. *Infection and Immunity* **39**:371–376. doi:10.1128/IAI.39.1.371-
779 376.1983
780
781 Millen AM, Horvath P, Boyaval P, Romero DA. 2012. Mobile CRISPR/Cas-Mediated
782 Bacteriophage Resistance in Lactococcus lactis. *PLoS One* **7**. doi:10.1371/journal.pone.0051663
783
784 Miller, J. (1972). Miller JH. Experiments in Molecular Genetics, Cold Spring Harbor Laboratory
785 Press, Cold Spring Harbor, NY.
786
787 Mock M, Fouet A. 2001. Anthrax. *Annu Rev Microbiol* **55**:647–671.
788 doi:10.1146/annurev.micro.55.1.647
789
790 Molin S, Tolker-Nielsen T. 2003. Gene transfer occurs with enhanced efficiency in biofilms and
791 induces enhanced stabilisation of the biofilm structure. *Current Opinion in Biotechnology*
792 **14**:255–261. doi:10.1016/S0958-1669(03)00036-3
793
794 Mutlu A, Trauth S, Ziesack M, Nagler K, Bergeest J-P, Rohr K, Becker N, Höfer T, Bischofs IB.
795 2018. Phenotypic memory in Bacillus subtilis links dormancy entry and exit by a spore quantity-
796 quality tradeoff. *Nature Communications* **9**:69. doi:10.1038/s41467-017-02477-1

797
798 Okinaka RT, Cloud K, Hampton O, Hoffmaster AR, Hill KK, Keim P, Koehler TM, Lamke G,
799 Kumano S, Mahillon J, Manter D, Martinez Y, Ricke D, Svensson R., Jackson PJ. 1999.
800 Sequence and Organization of pXO1, the Large Bacillus anthracis Plasmid Harboring the
801 Anthrax Toxin Genes. *Journal of Bacteriology* **181**:6509–6515. doi:10.1128/JB.181.20.6509-
802 6515.1999
803
804 Parashar V, Jeffrey PD, Neiditch MB. 2013. Conformational Change-Induced Repeat Domain
805 Expansion Regulates Rap Phosphatase Quorum-Sensing Signal Receptors. *PLoS Biol*
806 **11**:e1001512. doi:10.1371/journal.pbio.1001512
807
808 Pollak S, Omer Bendori S, Eldar A. 2015. A complex path for domestication of B. subtilis
809 sociality. *Curr Genet* **61**:493–496. doi:10.1007/s00294-015-0479-9
810
811 Pollak S, Omer-Bendori S, Even-Tov E, Lipsman V, Bareia T, Ben-Zion I, Eldar A. 2016.
812 Facultative cheating supports the coexistence of diverse quorum-sensing alleles. *Proc Natl Acad*
813 *Sci USA* **113**:2152–2157. doi:10.1073/pnas.1520615113
814
815 Popowska M, Krawczyk-Balska A. 2013. Broad-host-range IncP-1 plasmids and their resistance
816 potential. *Front Microbiol* **4**. doi:10.3389/fmicb.2013.00044
817
818 Short FL, Monson RE, Salmond GP. 2015. A Type III protein-RNA toxin-antitoxin system from
819 *Bacillus thuringiensis* promotes plasmid retention during spore development. *RNA Biology*
820 **12**:933–937. doi:10.1080/15476286.2015.1073438
821
822 Singh PK, Ramachandran G, Ramos-Ruiz R, Peiró-Pastor R, Abia D, Wu LJ, Meijer WJJ. 2013.
823 Mobility of the native Bacillus subtilis conjugative plasmid pLS20 is regulated by intercellular
824 signaling. *PLoS Genet* **9**:e1003892. doi:10.1371/journal.pgen.1003892
825
826 Siranosian KJ, Grossman AD. 1994. Activation of spo0A transcription by sigma H is necessary
827 for sporulation but not for competence in Bacillus subtilis. *J Bacteriol* **176**:3812–3815.
828
829 Smith P, Schuster M. 2019. Public goods and cheating in microbes. *Current Biology* **29**:R442–
830 R447. doi:10.1016/j.cub.2019.03.001
831
832 Sonenshein AL. 2000. Control of sporulation initiation in Bacillus subtilis. *Current Opinion in*
833 *Microbiology* **3**:561–566. doi:10.1016/S1369-5274(00)00141-7
834

835 Sullivan JT, Ronson CW. 1998. Evolution of rhizobia by acquisition of a 500-kb symbiosis
836 island that integrates into a phe-tRNA gene. *Proceedings of the National Academy of Sciences*
837 **95**:5145–5149. doi:10.1073/pnas.95.9.5145
838
839 Thomas J, Lee CA, Grossman AD. 2013. A Conserved Helicase Processivity Factor Is Needed
840 for Conjugation and Replication of an Integrative and Conjugative Element. *PLoS Genet* **9**.
841 doi:10.1371/journal.pgen.1003198
842
843 Tokuda Y, Ano T, Shoda M. 1993. Characteristics of plasmid stability in Bacillus subtilis NB22,
844 an antifungal-antibiotic iturin producer. *Journal of Fermentation and Bioengineering* **75**:319–
845 321. doi:10.1016/0922-338X(93)90159-6
846
847 Treangen TJ, Rocha EPC. 2011. Horizontal Transfer, Not Duplication, Drives the Expansion of
848 Protein Families in Prokaryotes. *PLoS Genet* **7**. doi:10.1371/journal.pgen.1001284
849
850 Turgeon N, Laflamme C, Ho J, Duchaine C. 2008. Evaluation of the plasmid copy number in B.
851 cereus spores, during germination, bacterial growth and sporulation using real-time PCR.
852 *Plasmid* **60**:118–124. doi:10.1016/j.plasmid.2008.05.001
853
854 Vlamakis H, Aguilar C, Losick R, Kolter R. 2008. Control of cell fate by the formation of an
855 architecturally complex bacterial community. *Genes & Development* **22**:945–953.
856 doi:10.1101/gad.1645008
857
858 Vlamakis H, Chai Y, Beauregard P, Losick R, Kolter R. 2013. Sticking together: building a
859 biofilm the Bacillus subtilis way. *Nat Rev Microbiol* **11**:157–168. doi:10.1038/nrmicro2960
860
861 Waldor MK, Mekalanos JJ. 1996. Lysogenic conversion by a filamentous phage encoding
862 cholera toxin. *Science* **272**:1910–1914. doi:10.1126/science.272.5270.1910
863
864 Wozniak RAF, Waldor MK. 2010. Integrative and conjugative elements: mosaic mobile genetic
865 elements enabling dynamic lateral gene flow. *Nat Rev Microbiol* **8**:552–563.
866 doi:10.1038/nrmicro2382