Title

No behavioral evidence for rhythmic facilitation of perceptual discrimination

Authors

Wy Ming Lin*, Djamari A. Oetringer*, Iske Bakker-Marshall, Jill Emmerzaal, Anna Wilsch, Hesham A. ElShafei, Elie Rassi, Saskia Haegens

Abstract

It has been hypothesized that internal oscillations can synchronize (i.e., entrain) to external environmental rhythms, thereby facilitating perception and behavior. To date, evidence for the link between the phase of neural oscillations and behavior has been scarce and contradictory; moreover, it remains an open question whether the brain can use this tentative mechanism for active temporal prediction. In our present study, we conducted a series of auditory pitch discrimination tasks with 181 healthy participants in an effort to shed light on the proposed behavioral benefits of rhythmic cueing and entrainment. In the three versions of our task, we observed no perceptual benefit of purported entrainment: targets occurring in-phase with a rhythmic cue provided no perceptual benefits in terms of discrimination accuracy or reaction time when compared with targets occurring out-of-phase or targets occurring randomly, nor did we find performance differences for targets preceded by rhythmic vs. random cues. However, we found a surprising effect of cueing frequency on reaction time, in which participants showed faster responses to cue rhythms presented at higher frequencies. We therefore provide no evidence of entrainment, but instead a tentative effect of covert active sensing in which a faster external rhythm leads to a faster communication rate between motor and sensory cortices, allowing for sensory inputs to be sampled earlier in time.

Acknowledgements

We would like to thank Aarti Ramchandran and Camille Gret for assistance with data collection, and Sanne ten Oever for thoughtful comments on an earlier version of the manuscript. This work was supported by NWO grants Veni 451-14-027 and 016.Vidi.185.137 to SH.

Data Accessibility statement

The data that support the findings of this study and the code that was used to analyze it will be publicly available after publication.

1 Introduction

When presented with rhythmic input we tend to produce rhythmic behavior. Think of clapping to a drumbeat and being able to continue clapping to the beat after the drum stops. Such rhythmic behavior, driven by temporal expectations, could be subserved by rhythmic brain activity (i.e., neural oscillations), a prominent feature of brain dynamics. In this view, internal neural oscillations that synchronize (entrain) to external environmental rhythms reflect temporal predictions, thereby facilitating perception and behavior (Lakatos et al., 2008).

This entrainment proposal rests on the key idea that neural oscillations reflect alternating excitability states (excitation/inhibition) of neuronal ensembles (Başar et al., 2013; Bishop, 1932). Accordingly, the phase of ongoing oscillations at the time of sensory stimulation impacts the magnitude of the neural response to that stimulus, as well as subsequent behavioral performance (e.g. Busch et al., 2009; Mathewson et al., 2009; Ten Oever & Sack, 2019; for a review see VanRullen, 2016).

Recently, the proposal of entrainment as a key mechanism for synchronizing with external input in order to optimize perceptual processing has gained traction, particularly in the fields of speech and language comprehension (for reviews see: Haegens & Golumbic, 2018; Meyer et al., 2019; Obleser & Kayser, 2019). However, there seems to be no consensus as to the definition of neural entrainment as a biophysical process (Haegens, 2020; Haegens & Golumbic, 2018; Lakatos et al., 2019; Obleser & Kayser, 2019). One such proposal (Haegens & Golumbic, 2018) — on which the current study is theoretically framed — argues for a strict definition of entrainment where: (1) an endogenous oscillator exists in the absence of rhythmic stimulation; that is, there is internally generated oscillatory brain activity at a certain frequency, (2) the endogenous oscillator adjusts its phase to align with external rhythmic stimulation, but only as long as the external rhythm falls within a range near that of the intrinsic frequency, and (3) the oscillatory activity continues for a number of cycles after the external rhythm stops.

Entrainment is often investigated with rhythmic cueing paradigms where participants are presented with a stimulus stream at a certain frequency. This rhythmic stream is then followed by a target stimulus that might occur in- or out-of-phase with the rhythmic cue, one or more cycles later (Jones et al., 2002). While several studies have shown that rhythmic cues indeed facilitate target processing, particularly for targets occurring in-phase (Jones et al., 2002, 2006; Rohenkohl & Nobre, 2011; Rohenkohl et al., 2011), others have reported opposite (Barnes & Johnston, 2010; Bauer et al., 2015; Hickok et al., 2015; Spaak et al., 2014, see Haegens & Golumbic for review) or null effects (Bosker & Kösem, 2017).

If entrainment indeed optimizes perception, we expect rhythmic cueing paradigms to produce certain behavioral benefits that follow from the criteria outlined above. Namely, we expect participants to perform better in conditions where temporal expectations are more readily built up: (1) when the cue is rhythmic (vs. random, arrhythmic, or continuous), i.e., providing explicit rhythmic temporal information, (2) when the target timing is rhythmically aligned with the cue (vs. occurring at a random time), i.e., providing implicit rhythmic structure, and (3) occurs in-phase (vs. out-of-phase) with respect to the cue. Further, we expect this behavioral benefit to wane over time as the entrained oscillation persists for a number of cycles after the external rhythm stops. Thus, we expect (4) participants to perform better for targets occurring shortly after the rhythm (vs. later). Finally, we expect (5) this behavioral benefit to be

tightly linked to the frequency of the external rhythm, i.e., frequencies closest to endogenous oscillations are more behaviorally beneficial than others.

In a series of three behavioral experiments, we aimed to test these key predictions. A total of 181 healthy human participants performed an auditory pitch discrimination task where a target tone was presented after a rhythmic or random (i.e., continuous) auditory cue, with the timing of the target either rhythmically aligned to the cue or randomly timed. We manipulated the timings such as to be able to test each of our predictions listed above, and report no support for any of them.

2 Methods

2.1 Participants

Thirty-two healthy participants (21 female, 11 male; age range: 18–31 years, *median* = 23 years) took part in Experiment I. We excluded two participants from the analysis due to low performance levels and one participant due to low number of trials left after preprocessing. A total of 119 healthy participants (77 female, 42 male; age range: 18-35 years; *median* = 22 years) took part in Experiment II. Five participants were excluded due to low performance levels. Of the remaining participants, 30 performed the rhythmic cue-rhythmic target condition, 29 the rhythmic cue-random target condition, 29 the random cue-rhythmic target condition, and 26 the random cue-random target condition. Thirty healthy participants (22 female, 8 male; age range: 18–33 years, *median* = 22 years) took part in Experiment III. One participant was excluded due to low trial number. All participants provided written informed consent before testing and were fully debriefed about the goals of the study. The study was approved by the local ethics committee (CMO Arnhem-Nijmegen).

2.2 Experimental task and stimuli

Participants performed an auditory target discrimination task in which they had to indicate whether a brief target tone either increased or decreased in pitch (Wilsch et al., 2020; Figure 1). The target was preceded by a temporal auditory cue, which could be either rhythmic or random (i.e., continuous). In the rhythmic-cue condition, we presented four tones at a particular frequency. In the random-cue condition, we presented the tone continuously for a time period that mirrored the rhythmic-cue window. The timing of the target presentation could similarly be either rhythmic or random. In the rhythmic-target condition, we presented the tones either in-phase (80% of trials) or out-of-phase (20%) with respect to the preceding cue rhythm, within a window of at most four cycles; i.e., in-phase targets could occur 1, 2, 3, or 4 cycles after the cue, out-of-phase targets could occur 1.5, 2.5, or 3.5 cycles after the cue. In the random-target condition, we drew the timing of the tone from a flat probability distribution, with the full window matching that of the rhythmic-target condition. We presented all tones for 40 ms and instructed participants to respond as fast as possible via button press.

In all three experiments, we used multiple cue frequencies, represented as their inverse *delta*, that is, the duration of one cycle. For trials with rhythmic cues, this meant manipulating the delta of the tone stream; for trials with continuous cues, this meant simply manipulating the total duration of the cue. Similarly, we determined the timing of the target presentation according to that trial's delta.

Note that on rhythmic cue-rhythmic target trials, the rhythmic cue provides explicit temporal information with regard to target timing, whereas on rhythmic cue-random target trials the rhythm does not provide information beyond the length of the full window in which the target can occur. In both cases, the participant could form an (automatic) rhythmic prediction, but only in the former is it helpful for the task. On random cue-rhythmic target trials, the cue provides implicit temporal information, and cue offset can be used to predict the timing of the implicit rhythm (that is, if the participant has learned the rhythmic

target-structure over the course of a block), whereas on random cue-random target trials there is no temporal information available beyond the full target window length. Whether these two conditions differ in terms of temporal predictions depends on whether the participant picks up on the implicit statistics of the task.

2.3 Experimental protocol

Experiment I consisted of a within-subject 2x2 design with factors cue (rhythmic vs. random) and target (rhythmic vs. random), i.e., all participants performed all combinations of rhythmic/random cue/target conditions. Additionally, we used three different deltas (500, 600, and 700 ms, corresponding to 2.0, ~1.6, and ~1.4 Hz, respectively) for the rhythmic conditions, and corresponding window lengths for the random conditions. Participants performed 12 blocks of 60 trials each, with fixed condition (i.e., rhythmic-rhythmic, rhythmic-random, random-rhythmic, random-random) and delta (i.e., 500, 600, and 700 ms) per block.

Experiment II consisted of a between-subject design in which each participant performed only one of the four task conditions. We used three different deltas for each participant (400, 600, and 900 ms, corresponding to 2.5, ~1.6, and ~1.1 Hz, respectively). Participants performed nine blocks of 60 trials each, with fixed delta per block.

Experiment III consisted of only the rhythmic cue-rhythmic target condition. We used ten different deltas in order to determine frequency specificity of potential temporal facilitation effects (100, 120, 150, 200, 250, 400, 600, 800, 1000, and 1250 ms, corresponding to 10, ~8.3, ~6.6, 5, 4, 2.5, ~1.6, 1.25, 1, and 0.8 Hz, respectively). Participants performed ten blocks of 60 trials each, with randomized delta across trials per block.

2.4 Data analysis and statistics

We analyzed behavioral performance in terms of accuracy and reaction time (RT) and excluded participants with accuracy scores lower than 55% (see section 2.1 Participants). We included trials with rhythmic targets occurring out-of-phase (20%) when addressing whether target phase influenced performance, but removed these out-of-phase trials from the data for all other analyses.

We then normalized RT per participant by dividing single-trial RTs by the participant's mean RT, and removed outlier trials outside the boundaries of Tukey fences (average excluded trials per participant; exp I: 36/480; exp II: 25/540; exp III: 28/480). Next, we equalized trial numbers across conditions by randomly omitting trials, and excluded participants with fewer than five trials in any condition (resulting in one participant removed from experiment I).

Finally, on the remaining data, we calculated accuracy (% correct trials) per condition, then removed incorrect trials (average incorrect trials per participant; exp I: 156/480; exp II: 76/540; exp III: 73/480) and calculated mean RT per condition.

For experiment I, we computed classical and Bayesian repeated measures ANOVAs to estimate differences in accuracy and RT using the factors ***cue rhythmicity*** (*rhythmic* vs. *random*), ***target rhythmicity*** (*rhythmic*

vs. *random*), ***target timing*** (*early* vs. *late* in the target window, corresponding to 1–2 vs. 3–4 *cycles* after cue), and ***delta*** (the different cue frequencies, represented as their inverse). For the ***target phase*** (*in-phase* vs. *out-of-phase*) contrast, we used classical and Bayesian dependent t-tests on both accuracy and normalized RT.

For experiment II we did the same but with *cue rhythmicity* and *target rhythmicity* conditions as between-subject factors, and *target timing and delta* as within-subject factors. For experiment III, there were only the within-subjects factors *target timing* and *delta*. We applied Greenhouse-Geisser correction if the assumption of sphericity was violated.

3 Results

3.1 No benefit of rhythmicity or in-phase target presentation

First, we investigated whether there was any benefit of rhythmic cues and targets (vs. random ones) on behavioral performance (accuracy and RT). We manipulated the rhythmicity of the cues and targets in experiments I (within-subjects) & II (between-subjects), and found the same pattern of results in both experiments (Figure 2).

In experiment I, whether the cue was rhythmic or random had no effect on RT ($F(1,28)$ = .688, p = .414, BF_{10} = .157) nor on accuracy ($F(1,28)$ = 1.616, p = .214, BF_{10} = .305), and whether the target was rhythmic or random also had no effect on RT nor on accuracy (RT: $F(1,28)$ = .413, p = .526, BF_{10} = .133; accuracy: $F(1,28)$ = 7.910e-4, p = .978, BF_{10} = .083). Similarly, in experiment II, the cue rhythmicity had no effect on RT ($F(1,113)$ = 2.572e-4, p =.987, BF_{10} = .153) nor on accuracy ($F(1,113)$ = .428, p = .514, BF_{10} = .412), and target rhythmicity also had no effect on RT ($F(1,113)$ =2.185, p = .142, BF_{10} = .470) nor on accuracy (F$(1,113)$ = 0.259, p = .612, BF_{10} = .371).

Moreover, contrary to our expectations, none of the interactions showed a significant effect. This included the interaction of interest in the context of entrainment: i.e., between rhythmicity of cue and target in experiment I (for RT: $F(1,28)$ = .010, p = .922, BF_{10} = .105, for accuracy: $F(1,28)$ = .130, p = .721, BF_{10} = .107). In other words, people were not better at discriminating a target tone occurring at a predictable time point after a rhythmic cue, compared to when the target tone occurred at a random time point after a random cue.

Next, we asked whether targets occurring in-phase with a rhythmic cue were better discriminated compared to targets occurring out-of-phase, and found no evidence for such an effect on accuracy or RT in any of the experiments (Figure 3 and Table 1). Note that this finding directly contradicts the entrainment hypothesis. In fact, we found a trend in the opposite direction in experiment III, where participants were on average faster in responding to out-of-phase targets, but not significantly so (p = .065).

Finally, it could be argued that this effect would only be observable at particular, individually preferred deltas, and that including multiple deltas would dilute this effect at the group level. For experiment III, we performed the same analysis only on individually preferred deltas (defined as the delta with the highest accuracy) and still found no effect of in- vs. out-of-phase target presentation (t(28) = 0.203, p = .841, BF_{10} = 0.201).

3.2 Better performance for later-occurring targets

We then asked whether the duration of the period between cue offset and target onset had an influence on behavioral performance (Figure 4). In experiments I and II, participants responded faster when the target occurred in the later (vs. earlier) half of the target interval (exp I: $F(1,28)$ = 5.091, p = .032, BF_{10} = .563, exp II: F(1,113) = 6.075, p = .015, BF_{10} = .256), but not in experiment III (F(1,28) = 1.716, p = .201, BF_{10} = .170). Similarly, in experiments I and II participants responded more accurately when the target occurred

later (exp I: $F(1,28) = 31.984$, $p < .001$, $BF_{10} = 7.276$; exp II: $F(1,113) = 24.352$, $p < .001$, $BF_{10} = 66.853$), but not in experiment III ($F(1,28) = 3.026$, $p = .093$, $BF_{10} = 1.057$). It could be argued that this effect was absent in experiment III as we used multiple deltas, and hazard rate effects might disappear for the faster ones. Thus, we repeated this analysis in experiment III focusing only on those deltas that were in the same range as the deltas of experiments I and II (400, 600, and 800 ms), and still found no effect on RT when the target occurred late vs. early during the target delay ($t(28) = -0.791$, $p = .436$, $BF_{10} = 0.263$). In other words, this potential hazard rate effect held only when the duration of the cue (or delta) was constant within a block (experiments I and II), but not when delta varied trial-by-trial (experiment III).

3.3 Faster responses following faster rhythmic cues

Finally, we asked whether some cueing rhythms were more behaviorally beneficial than others (Figure 5). Across all three experiments, we observed a remarkably robust speeding up of RT with faster cues (exp I: $F(2,56) = 11.649$, $p < 0.001$, $BF_{10} = 5598.119$; exp II: $F(2,226) = 74.104$, $p < .001$, $BF_{10} > 100$; exp III: $F(9,252) = 35.527$, $p < 0.001$, $BF_{10} > 100$). This effect was most evident in experiment III, which included ten different deltas rather than three, and where the cues were exclusively rhythmic and varied trial-wise (in frequency) rather than block-wise. Accuracy also increased with faster cues in experiment II ($F(2,226) = 5.651$, $p = .004$, $BF_{10} = 37.088$), but not in experiments I and III (exp I: $F(2,56) = .165$, $p = .848$, $BF_{10} = .022$; exp III: $(9,252) = .997$, $p = .443$, $BF_{10} = .004$), suggesting the RT effect is not necessarily reflective of a speed-accuracy trade-off.

In experiments I and II, where cues and targets could be rhythmic or random, we also asked whether the rhythmicity of cues and targets interacted with the RT effect of delta reported here (Figure 6). In experiment I, the effect of faster cues on RT did not depend on the rhythmicity of the target ($F(2,56) = .259$, $p = .773$, $BF_{10} = 32.976$), but it depended to a degree, though not significantly, on the rhythmicity of the cue ($F(2,56) = 2.877$, $p = .065$, $BF_{10} = 635.866$). However, in experiment II, the RT effect of delta depended on cue rhythmicity ($F(2,226) = 3.67$, $p = .027$, $BF_{10} = 7.54$) but not target rhythmicity ($F(2,226) = 1.067$, $p = .346$, $BF_{10} = .11$). We could not test this in experiment III because we only used rhythmic cues. Overall, the speeding up of RT following faster cues benefitted from rhythmic cueing.

Finally, we asked whether delta interacted with target timing (early vs. late; reported in the previous section) in experiments I and II but found no such interaction (exp I: $F(2,56) = .007$, $p = .99$, $BF_{10} = .014$; exp II: $F(2,226) = .936$, $p = .394$, $BF_{10} = .047$). In other words, these two effects — hazard rate and RT speedup — did not depend on each other (Figure 6).

4 Discussion

In a series of three experiments, we found no behavioral benefit of rhythmic cueing, compared to random cueing (i.e., a continuous tone), neither on a within-subjects level (experiment I) nor on a between-subjects level (experiment II). We also found no behavioral advantage for targets appearing at a rhythmically consistent timing, compared to appearing at a random timing. In addition, we found no behavioral benefit for targets occurring in-phase with rhythmic cues, compared to those occurring out-of-phase. However, we found that shortening the duration of the cue — or speeding it up — consistently resulted in faster reaction times.

The idea of neural entrainment as a mechanism to facilitate sensory processing rests on the assumption that neural oscillations reflect rhythmic phases of high and low neural excitability that coincide with phases of good and bad perceptual performance, respectively. This is supported by evidence that such phase effects occur spontaneously, i.e., without exposure to an external rhythm (e.g., Busch et al., 2009; Mathewson et al., 2009). Within the entrainment framework, it is then thought that these internal phases can be adjusted to external rhythms, potentially providing a mechanism for temporal prediction. The influence of external rhythms on perception and subsequent behavior has been tentatively shown (e.g. Jones et al., 2002, 2006), but these results are now being scrutinized by the field, for example in the current special issue (also see Haegens & Golumbic, 2018 for review). From an electrophysiological point of view, it has been difficult to show that neural oscillatory phase entrains to external rhythms (e.g. Wilsch et al., 2020), as an observed "entrained" brain rhythm is difficult to disentangle from a series of evoked responses, a series of top-down predictions, or simple resonance (Haegens, 2020; Helfrich et al., 2019; Obleser & Kayser, 2019). As we did not collect electrophysiological data in our studies, we will restrict our discussion to the behavioral aspect of entrainment.

If the assumptions of entrainment are met, one would expect the entrained neural oscillations (and hence the concomitant behavioral benefit) to persist after the external rhythm stops (Lakatos et al., 2008). That rhythmicity in input streams offers perceptual and behavioral advantages has been shown repeatedly (Henry & Obleser, 2012; Jones et al., 2002, 2006; Rohenkohl & Nobre, 2011; Rohenkohl et al., 2011), however, most of these studies report these advantages when targets occur *within* rhythmic streams, with very few reporting advantages persisting after the stream stops. To the best of our knowledge, the few studies that have reported a persistent advantage have relied on relatively low numbers of participants (e.g. Farahbod et al., 2020; Hickok et al., 2015; five participants each; Mathewson et al., 2010, 2012; 13-16 participants each) and did not explicitly test for temporal predictions (i.e., rhythmic cues were uninformative). In our current study we tested whether rhythmicity in an auditory cue stream influences the discrimination of a target occurring after offset of the stream and found no such evidence.

There are a few possible explanations for these discrepancies: first, the nature of the task (detection versus discrimination) could play a role in limiting the behavioral facilitation of neural entrainment (Bauer et al., 2015). Further, there might be inter-participant variability in preferred frequency (and phase) on which such behavioral benefits depend (Zoefel et al., 2018), so the use of one frequency (and phase) for all participants might not lead to an observable effect at the group level. In all our experiments we used multiple frequencies (3 in experiment I-II and 10 in experiment III) and still did not find an impact of cue

rhythmicity for any of the frequencies, not even when taking into account interindividual variability in preferred frequencies. Finally, one could posit that if participants are exposed to both rhythmic and random cues in a single experiment, a less cognitively-demanding strategy is to entirely ignore the cues (both rhythmic and random) as they provide no perceived behavioral benefit. However, our experiment III was designed with cue rhythmicity as a between-subject factor to avoid such a carry-over effect, and nevertheless no effect of cue rhythmicity was found.

Another question we aimed to address was whether different cueing frequencies had different effects on behavior either due to inter-individual variability or the mechanistic roles ascribed to these frequencies: ramping up activity at slower frequencies (delta to theta) could lead to behavioral facilitation, as these low-frequency rhythms are thought to play a role in sensory sampling (Fiebelkorn & Kastner, 2019; VanRullen, 2016), while a similar increase in higher frequencies (especially alpha) could lead to a behavioral cost, as these oscillations are thought to play a role in functional inhibition (Klimesch et al., 2007). We found no evidence for certain frequencies inducing differential behavioral effects. Instead, we found that faster cues led to faster responses, a robust effect observed in all three experiments but most strikingly in experiment III, which was designed to address this question on a trial-by-trial level. Below we discuss possible explanations for this behavioral effect.

In paradigms with varying cue-target delays, RTs are usually faster on trials with long delays, as uncertainty of target timing decreases the later the target occurs (hazard rate effect; Näätänen, 1971). While this hazard rate effect could explain our finding that participants responded both faster and more accurately to later occurring targets, we argue that it cannot explain our finding that participants were faster with faster cues on two accounts: First, in our experiment, faster cues were followed by earlier-occurring targets on average, so one would expect responses to faster cues to be slower, but we found them to be faster. Second, in experiment I and II where cue and target intervals were of fixed length, this RT speed-up did not interact with target timing, suggesting that they are separate phenomena.

Our results can tentatively be explained with the notion of covert active sensing: i.e., the motor system actively coordinates the sensory system to adjust to the current environment (Schroeder et al., 2010). As a result, a faster external rhythm might increase the communication rate between the sensory and motor cortices. A faster communication rate in turn gives a faster response on average, since input can be sampled earlier in time. This interpretation is particularly supported by experiment III, where different frequencies were randomized across trials (i.e., not blocked as in the first two experiments), suggesting this is a rapidly adaptive mechanism suitable for real-life situations with varying temporal (ir-)regularities. Future work should further address this potential mechanism on the neural level.

Finally, we found that faster responses followed faster cues, particularly when the cues were rhythmic. The RT speed-up depended on cue rhythmicity in experiment II and showed a similar trend in experiment I (note that we used smaller differences between deltas in experiment I). We do not offer conclusive evidence as to whether this RT effect is exclusive to rhythmic contexts. Future work should address this question by manipulating cue rhythmicity on a trial-by-trial basis, in addition to independently varying the speed and duration of the cue. That is, in our current design, length of cue and target window scaled with the frequency of the cued rhythm (since we used a fixed number of cycles). Separately manipulating these factors would allow disentangling effects driven by the cue rhythm per se, versus effects driven by the

task rhythm. This would provide more insight into whether this speed-up is specific to micro (i.e., within trial) rhythmic contexts or reflects a more general adaptation to faster macro (i.e., across trials) rhythms.

5 References

Barnes, R., & Johnston, H. (2010). The role of timing deviations and target position uncertainty on temporal attending in a serial auditory pitch discrimination task. *Quarterly Journal of Experimental Psychology*, *63*(2), 341–355.

Başar, E., Aygölü, Ü., Panayırcı, E., & Poor, H. V. (2013). Orthogonal frequency division multiplexing with index modulation. *IEEE Transactions on Signal Processing*, *61*(22), 5536–5549.

Bauer, A.-K. R., Jaeger, M., Thorne, J. D., Bendixen, A., & Debener, S. (2015). The auditory dynamic attending theory revisited: A closer look at the pitch comparison task. *Brain Research*, *1626*, 198–210.

Bishop, G. H. (1932). Cyclic changes in excitability of the optic pathway of the rabbit. *American Journal of Physiology-Legacy Content*, *103*(1), 213–224.

Bosker, H. R., & Kösem, A. (2017). *An entrained rhythm's frequency, not phase, influences temporal sampling of speech*. 2416–2420.

Busch, N. A., Dubois, J., & VanRullen, R. (2009). The Phase of Ongoing EEG Oscillations Predicts Visual Perception. *Journal of Neuroscience*, *29*(24), 7869–7876. https://doi.org/10.1523/JNEUROSCI.0113-09.2009

Farahbod, H., Saberi, K., & Hickok, G. (2020). The rhythm of attention: Perceptual modulation via rhythmic entrainment is lowpass and attention mediated. *Attention, Perception, & Psychophysics*, *82*(7), 3558–3570.

Fiebelkorn, I. C., & Kastner, S. (2019). A rhythmic theory of attention. *Trends in Cognitive Sciences*, *23*(2), 87–101.

Haegens, S. (2020). Entrainment revisited: A commentary on Meyer, Sun, and Martin (2020). *Language, Cognition and Neuroscience*, 1–5.

Haegens, S., & Golumbic, E. Z. (2018). Rhythmic facilitation of sensory processing: A critical review. *Neuroscience and Biobehavioral Reviews*, *86*(July 2017), 150–165. https://doi.org/10.1016/j.neubiorev.2017.12.002

Helfrich, R. F., Breska, A., & Knight, R. T. (2019). Neural entrainment and network resonance in support of top-down guided attention. *Current Opinion in Psychology*, *29*, 82–89. https://doi.org/10.1016/j.copsyc.2018.12.016

Henry, M. J., & Obleser, J. (2012). Frequency modulation entrains slow neural oscillations and optimizes human listening behavior. *Proceedings of the National Academy of Sciences*, *109*(49), 20095–20100.

Hickok, G., Farahbod, H., & Saberi, K. (2015). The rhythm of perception: Entrainment to acoustic rhythms induces subsequent perceptual oscillation. *Psychological Science*, *26*(7), 1006–1013.

Jones, M. R., Johnston, H. M., & Puente, J. (2006). Effects of auditory pattern structure on anticipatory and reactive attending. *Cognitive Psychology*, *53*(1), 59–96.

Jones, M. R., Moynihan, H., MacKenzie, N., & Puente, J. (2002). Temporal aspects of stimulus-driven attending in dynamic arrays. *Psychological Science*, *13*(4), 313–319.

Klimesch, W., Sauseng, P., & Hanslmayr, S. (2007). Jensen and Mazaheri. *Brain Research Reviews*, *53*(1), 63–88. https://doi.org/10.1016/J.BRAINRESREV.2006.06.003

Lakatos, P., Gross, J., & Thut, G. (2019). A New Unifying Account of the Roles of Neuronal Entrainment. *Current Biology : CB*, *29*(18), R890–R905. https://doi.org/10.1016/j.cub.2019.07.075

Lakatos, P., Karmos, G., Mehta, A. D., Ulbert, I., & Schroeder, C. E. (2008). Entrainment of neuronal oscillations as a mechanism of attentional selection. *Science*, *320*(5872), 110–113. https://doi.org/10.1126/science.1154735

Mathewson, K. E., Fabiani, M., Gratton, G., Beck, D. M., & Lleras, A. (2010). Rescuing stimuli from invisibility: Inducing a momentary release from visual masking with pre-target entrainment. *Cognition*, *115*(1), 186–191.

Mathewson, K. E., Gratton, G., Fabiani, M., Beck, D. M., & Ro, T. (2009). To see or not to see: Prestimulus α phase predicts visual awareness. *Journal of Neuroscience*, *29*(9), 2725–2732.

Mathewson, K. E., Prudhomme, C., Fabiani, M., Beck, D. M., Lleras, A., & Gratton, G. (2012). Making waves in the stream of consciousness: Entraining oscillations in EEG alpha and fluctuations in visual awareness with rhythmic visual stimulation. *Journal of Cognitive Neuroscience*, *24*(12), 2321–2333.

Meyer, L., Sun, Y., & Martin, A. E. (2019). Synchronous, but not entrained: Exogenous and endogenous cortical rhythms of speech and language processing. *Language, Cognition and Neuroscience*, 1–11. https://doi.org/10.1080/23273798.2019.1693050

Näätänen, R. (1971). Non-aging fore-periods and simple reaction time. *Acta Psychologica*, *35*(4), 316–327.

Obleser, J., & Kayser, C. (2019). Neural Entrainment and Attentional Selection in the Listening Brain. *Trends in Cognitive Sciences*, *23*(11), 913–926. https://doi.org/10.1016/j.tics.2019.08.004

Rohenkohl, G., & Nobre, A. C. (2011). Alpha Oscillations Related to Anticipatory Attention Follow Temporal Expectations. *Journal of Neuroscience*, *31*(40), 14076–14084. https://doi.org/10.1523/JNEUROSCI.3387-11.2011

Rohenkohl, Gustavo, Coull, J. T., & Nobre, A. C. (2011). Behavioural dissociation between exogenous and endogenous temporal orienting of attention. *PLoS One*, *6*(1), e14620.

Spaak, E., de Lange, F. P., & Jensen, O. (2014). Local entrainment of alpha oscillations by visual stimuli causes cyclic modulation of perception. *Journal of Neuroscience*, *34*(10), 3536–3544.

Ten Oever, S., & Sack, A. T. (2019). Interactions between rhythmic temporal and feature predictions for parallel time-content associations. *Frontiers in Neuroscience*, *13*, 791.

VanRullen, R. (2016). Perceptual cycles. *Trends in Cognitive Sciences*, *20*(10), 723–735.

Wilsch, A., Mercier, M., Obleser, J., Schroeder, C. E., & Haegens, S. (2020). Spatial attention and temporal expectation exert differential effects on visual and auditory discrimination. *Journal of Cognitive Neuroscience*, 1–15.

Zoefel, B., Archer-Boyd, A., & Davis, M. H. (2018). Phase entrainment of brain oscillations causally modulates neural responses to intelligible speech. *Current Biology*, *28*(3), 401–408.

6 Figures & Tables

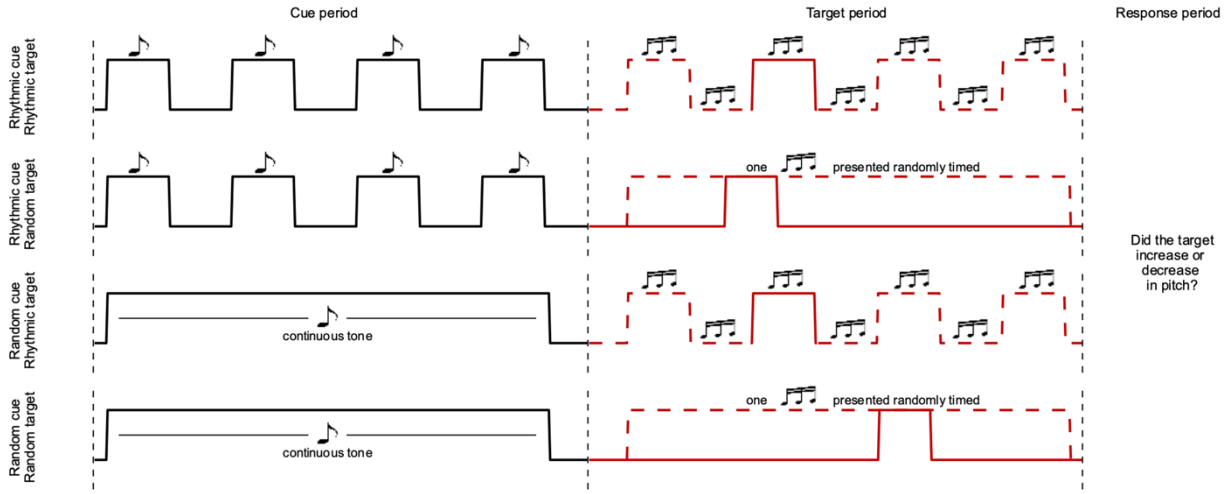

Fig. 1: ***Experimental paradigm.*** All experiments used a variation of the auditory pitch discrimination task where a four-tone rhythmic sequence or a continuous tone (black) cued a target tone that was either rhythmically aligned with the cue or randomly timed (red). Participants indicated by button press whether the target tone had an increasing or decreasing pitch. All combinations of (*rhythmic/random cue* x *rhythmic/random target* are shown. Solid red lines represent one presentation of the target, dashed lines show other possible timings. Note that the random target could be presented at any point during the target period.

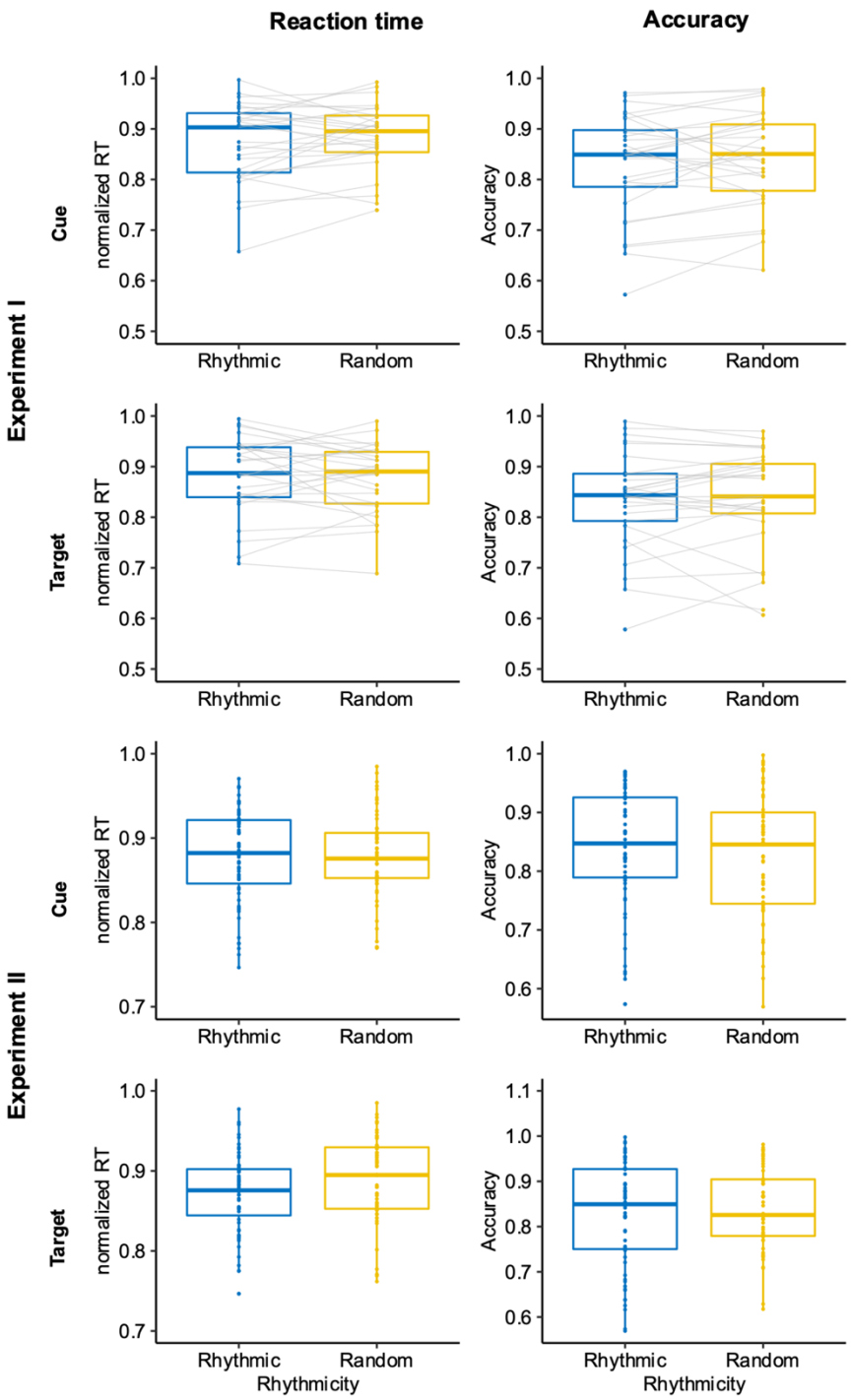

Fig. 2: ***Effect of cue and target rhythmicity.*** In both experiment I (within-subjects; top half) and experiment II (between-subjects; bottom half), participants were neither faster (left) nor more accurate (right) in responding to the target when the cue was rhythmic (vs. random) or when the target was rhythmic (vs. random).

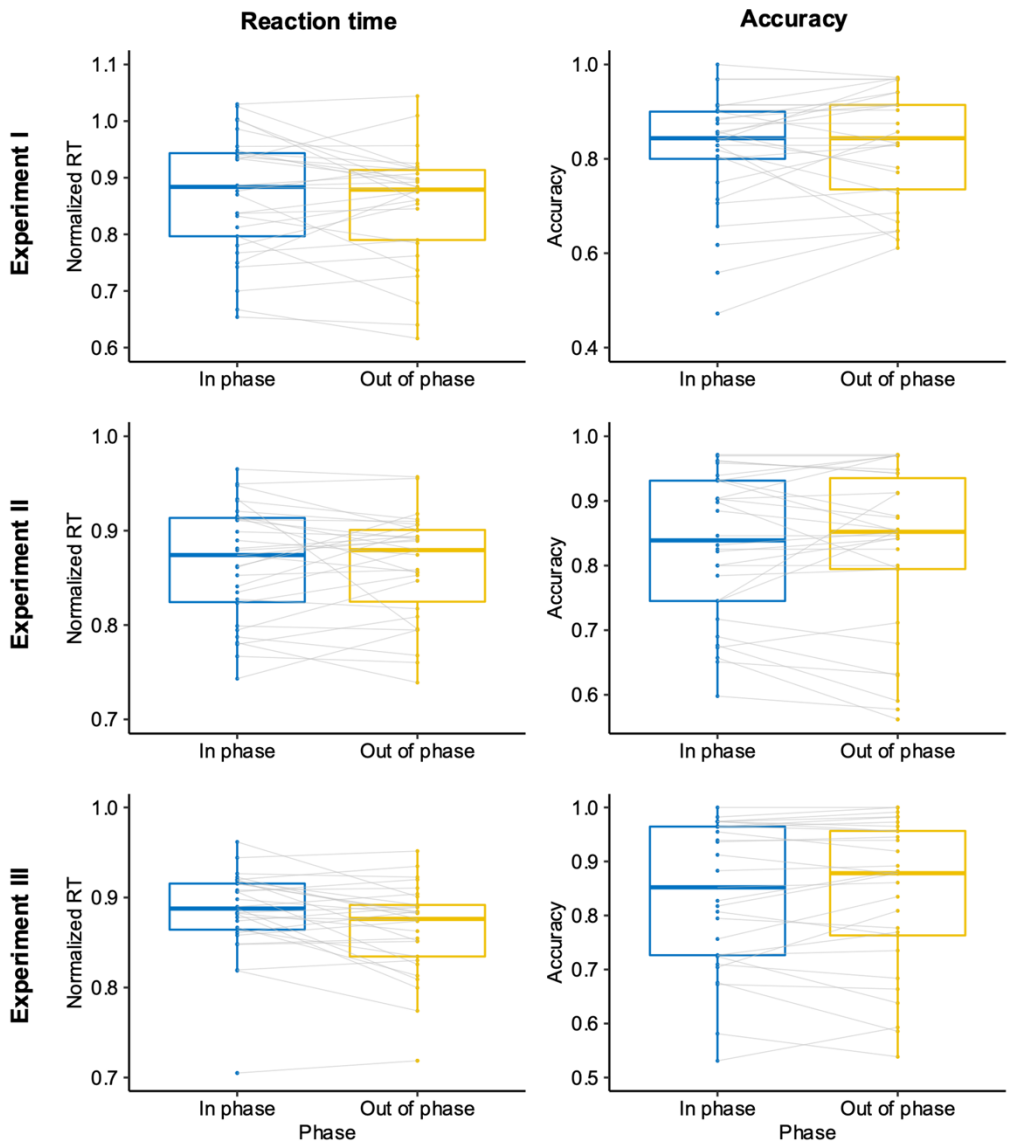

Fig. 3: ***Effect of phase*.** Across all three experiments (top, middle, and bottom panels), participants were neither faster (left) nor more accurate (right) in responding to a target occurring in-phase (vs. out-of-phase) with the cue stream.

Experiment	Reaction time			Accuracy		
	t	*p*	BF_{10}	*t*	*p*	BF_{10}
Experiment I	-0.1	.921	0.198	-0.236	.815	0.203
Experiment II	0.204	.840	0.198	0.355	.725	0.206
Experiment III	1.921	.065	0.985	0.287	.776	0.205

Table 1: *Effect of phase*. T-values, p-values, and Bayes Factors for the effect of the factor *phase* on RT and accuracy in the three experiments. None of the effects were statistically significant.

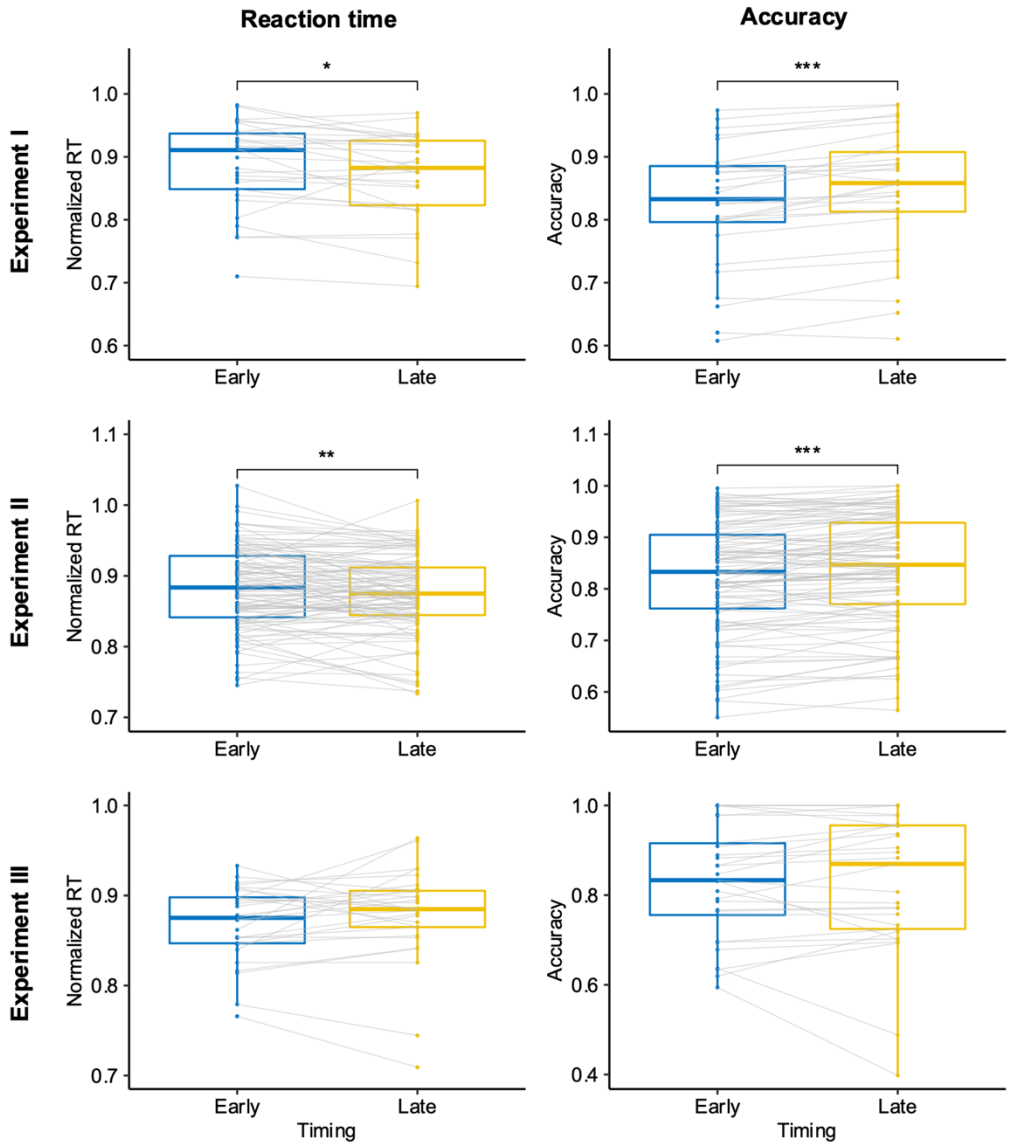

Fig. 4: *Effect of timing*. Left panels: In experiment I and II (top and middle), participants were faster to respond when the target occurred in the latter half of the target period (compared to the first half), but not in experiment III (bottom). Right panels: In experiments I and II (top and middle), participants also responded more accurately to later occurring targets, but not in experiment III (bottom). * p<.05; **p<.01; ***p<.001.

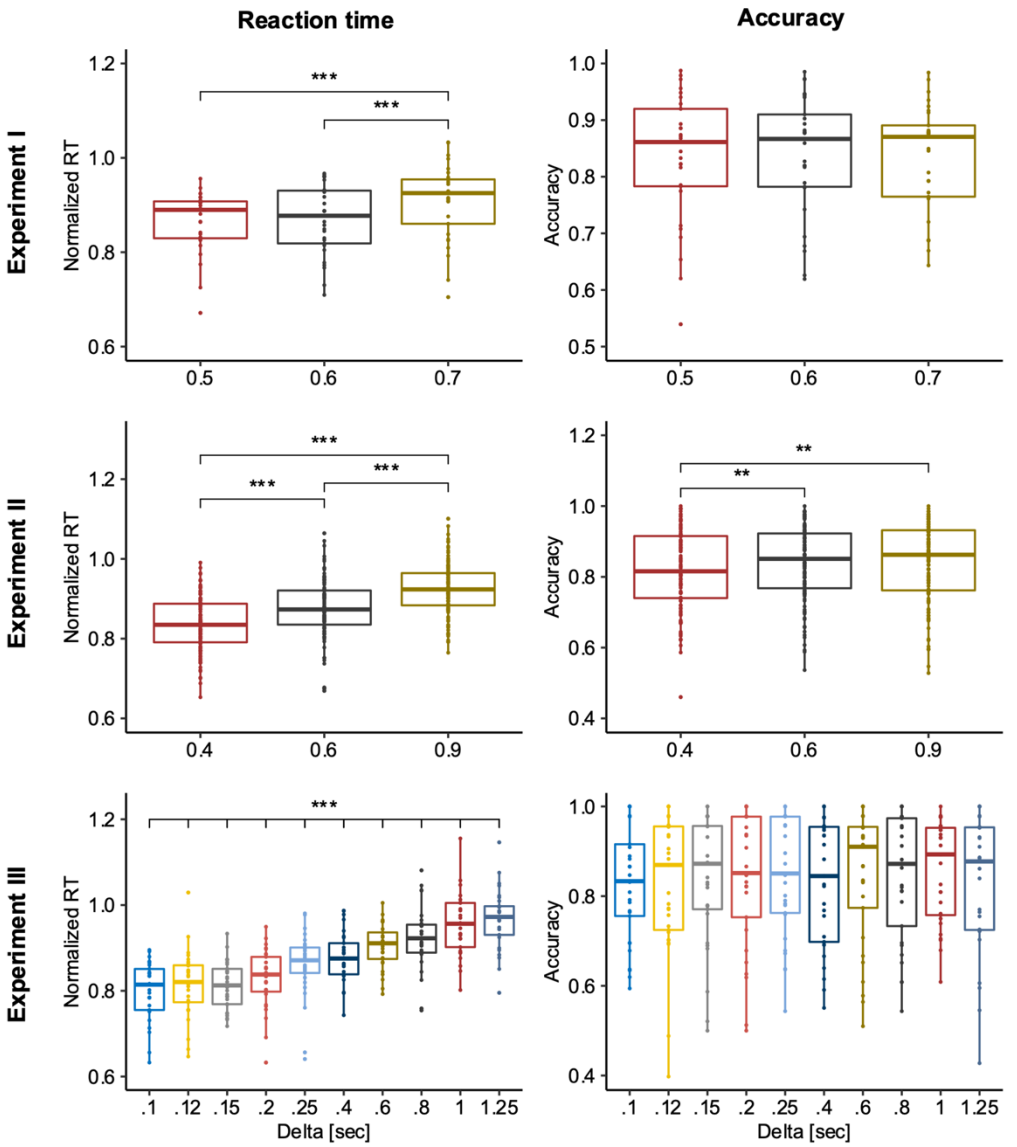

Fig. 5: ***Effect of delta*.** Left panels: In all three experiments, participants were faster to respond on trials with faster cueing frequencies (lower *delta*). Right panels: In experiment II (middle) but not experiments I and III (top and bottom), participants were more accurate in responding on trials with slower cueing frequencies (higher *delta*). **p<.01; ***p<.001.

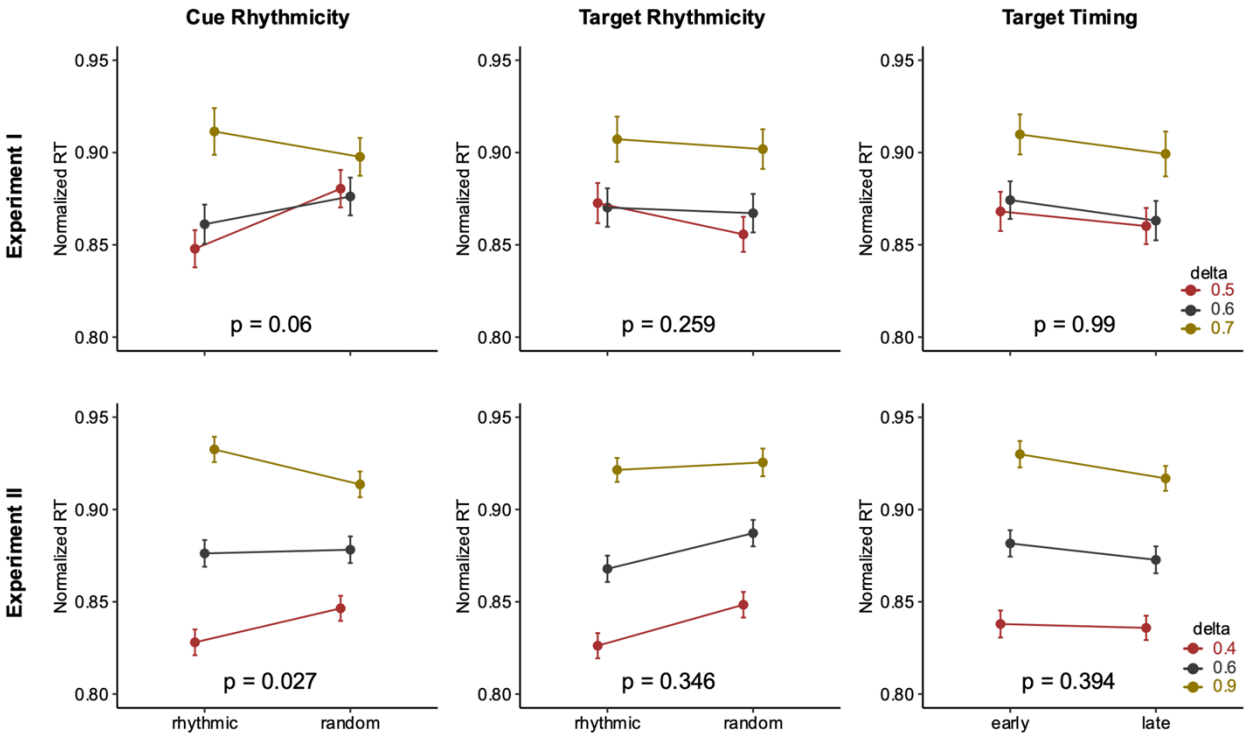

Fig. 6: ***Interaction between delta and cue/target properties.*** Left panels: In experiment I and II the speeding up of responses with faster cueing frequencies (lower *delta*) was more prominent when the cue was rhythmic (compared to random). Middle panels: In both experiments there was no interaction between the cueing frequencies and the target rhythmicity. Left panels: In both experiments there was no interaction between the cueing frequencies and the target timing. Error bars represent standard error of mean.