Diverse *w*Mel variants of *Wolbachia pipientis* differentially rescue fertility and cytological defects of the *bag of marbles* partial loss of function mutation in *Drosophila melanogaster*

Jaclyn E. Bubnell[1*], Paula Fernandez-Begne[1], Cynthia K.S. Ulbing[1], and Charles F. Aquadro[1*]

[1] Department of Molecular Biology and Genetics, Cornell University, Ithaca, NY, USA

*Correspondence: Jaclyn E. Bubnell, jeb486@cornell.edu and Charles F. Aquadro, cfa1@cornell.edu

Keywords: *Wolbachia*, germline stem cell, *bam,* oogenesis, differentiation, CRISPR/Cas9

Authors performed the following: JEB - conceptualization, investigation, validation, formal analysis, and writing. PFB and CKSU - investigation, analysis, and validation, CFA - conceptualization, funding acquisition, supervision, and writing.

Abstract

In *Drosophila melanogaster,* the maternally inherited endosymbiont *Wolbachia pipientis* interacts with germline stem cell genes during oogenesis. One such gene, *bag of marbles* (*bam*) is the key switch for differentiation and also shows signals of adaptive evolution for protein diversification. These observations have led us to hypothesize that *W. pipientis* could be driving the adaptive evolution of *bam* for control of oogenesis. To test this hypothesis, we must understand the specificity of the genetic interaction between *bam* and *W. pipientis*. Previously, we documented that the *W. pipientis* variant, *w*Mel, rescued the fertility of the bam^{BW} hypomorphic mutant as a transheterozygote over a *bam* null. However, bam^{BW} was generated more than 20 years ago in an uncontrolled genetic background and maintained over a balancer chromosome. Consequently, the chromosome carrying bam^{BW} accumulated mutations that have prevented controlled experiments to further assess the interaction. Here, we used CRISPR/Cas9 to engineer the same single amino acid *bam* hypomorphic mutation (bam^{L255F}) and a new *bam* null disruption mutation into the w^{1118} isogenic background. We assess the fertility of wildtype *bam*, bam^{L255F}/bam^{null} hypomorphic, and bam^{L255F}/ bam^{L255F} mutant females, each infected individually with ten *W. pipientis w*Mel variants representing three phylogenetic clades. Overall, we find that all of the *W. pipientis* variants tested here rescue *bam* hypomorphic fertility defects with *w*MelCS-like variants exhibiting the strongest rescue effects. Additionally, these variants did not increase wildtype *bam* female fertility. Therefore, both *bam* and *W. pipientis* interact in genotype-specific ways to modulate female fertility, a critical fitness phenotype.

45 # Introduction

46 *Wolbachia pipientis* is a maternally inherited endosymbiotic bacteria that infects over 65% of
47 insect species and manipulates reproduction in a myriad of ways in order to ensure its
48 transmission through the female germline (Werren et al. 2008; Lindsey 2020; Ote and
49 Yamamoto 2020). The phenotypes *W. pipientis* induces in its hosts include cytoplasmic
50 incompatibility (CI), in which embryos of matings between infected males and uninfected
51 females die; male killing, in which male embryos die; feminization of embryos; and
52 manipulation of germline stem cell differentiation in order to increase female fertility (Werren et
53 al. 2008). While *W. pipientis* manipulates its host to increase its own transmission, some *W.*
54 *pipientis* also provide the host protection against viruses, increase fecundity, modulate thermal
55 preference, and increase longevity (Dedeine et al. 2001; Chrostek et al. 2013; Arnold et al.
56 2019; Truitt et al. 2019; López-Madrigal and Duarte 2020; Hague et al. 2020).
57
58 Understanding the genetic mechanisms that *W. pipientis* uses to manipulate its host has been
59 of immense interest to both basic and applied fields of study. *W. pipientis* is of particular
60 interest as a control for disease vectors such as mosquitoes due to its ability to sweep through
61 a population (due to CI) and then protect the insect from viruses that can also cause human
62 illness such as Dengue, Zika, and Chikungunya (Moreira et al. 2009; Hoffmann et al. 2011;
63 Dutra et al. 2016; Utarini et al. 2021). However, it has been difficult to perform genetic studies
64 of *W. pipientis* function to understand the mechanisms of these host-microbe interactions since
65 *W. pipientis* is an obligate endosymbiont and cannot be cultured. Over the past few years,
66 multiple groups have utilized bioinformatic and in vitro screens to identify candidate *W.*
67 *pipientis* loci that modulate *Drosophila* phenotypes (Ote et al. 2016; Le Page et al. 2017).

These loci have then been expressed in *Drosophila* as transgenes. Through these methods, the *W. pipientis* genes *cifA* and *cifB* (orthologs in *w*Mel and *w*Pip) that cause CI have been identified and functionally validated in *D. melanogaster* (Beckmann et al. 2017; Le Page et al. 2017). These transgenic tools have been used to further define the CI phenotype (Shropshire et al. 2018), investigate the consequences of genetic variation at *cifA* and *cifB* on CI (Shropshire et al. 2021), and identify other host phenotypes affected by *cifA* and *cifB* (Deehan et al. 2021). Another group has identified the *W. pipientis* TomO locus which is one of likely multiple *W. pipientis* loci that interact with *Sex lethal*, a germline stem cell (GCS) gene that controls GSC maintenance and sex determination (Ote et al. 2016).

Previously, we reported that the *W. pipientis* variant *w*Mel genetically interacts with another *D. melanogaster* GSC gene, *bag of marbles* (*bam*). Infection with the *w*Mel variant rescues the fertility defect of females transheterozygous for the classic *bam* hypomorphic allele (bam^{BW}) and a classic *bam* null allele ($bam^{\Delta 59}$) (Flores et al. 2015). *Bam* is the switch for GSC daughter differentiation in *D. melanogaster* females and the switch for terminal spermatocyte differentiation in males (McKearin and Spradling 1990; Insco et al. 2012; Ting 2013). Although *bam* function is essential for gametogenesis, and *bam* is both necessary and sufficient for GSC daughter differentiation, we observe that it is evolving under positive selection for amino acid divergence in an episodic manner across the *Drosophila* genus (Bauer DuMont et al. 2007; Choi and Aquadro 2014). We see particularly strong bursts of amino acid changes at *bam* in the *D. melanogaster* and *D. simulans* lineages (Bauer DuMont et al. 2007). This episodic pattern of positive selection is consistent with selective pressures that are present in some lineages and not others and that may come and go over time. This is similar to the

91 nature of infections in natural populations, where *W. pipientis* variants are known to infect
92 populations, but also can be lost and replaced fairly often and on both long and short time
93 scales (Bailly-Bechet et al. 2017).
94
95 Our observation that *W. pipientis* and *bam* genetically interact led us to hypothesize that *W.*
96 *pipientis* may drive the adaptive evolution of *bam* (Flores et al. 2015). Since *W. pipientis* is a
97 known manipulator of reproduction, *W. pipientis* may be in conflict with *bam* and other GSC
98 genes for control of oogenesis. While it may seem favorable to host fitness if *W. pipientis*
99 manipulates germline stem cell regulation to increase reproduction, and thus not present an
100 evolutionary conflict, it may not be beneficial for the host if oogenesis is regulated by *W.*
101 *pipientis*. For example, *W. pipientis* may promote oogenesis when it is not favorable for the
102 host to reproduce due to environmental or physiological factors. To further understand if *W.*
103 *pipientis* could be in genetic conflict with *bam* and drive its adaptation, we believe it is
104 necessary to better understand the genetic interaction between *bam* and *W. pipientis*.
105
106 Fully sequenced variants of *W. pipientis* that infect *D. melanogaster* have been found to cluster
107 phenotypically and phylogenetically into two distinct groups of clades: *w*Mel-like variants
108 (including *w*Mel and *w*Mel2) and *w*MelCS-like variants (including *w*MelCS, *w*MelCS2 and
109 *w*MelPop) that are estimated to have diverged 80,000 fly generations before present
110 (Richardson et al. 2012; Chrostek et al. 2013). The *w*MelCS-like variants predominated in *D.*
111 *melanogaster* originally but have largely (although not completely) been replaced by *w*Mel-like
112 variants world-wide in the late 20th century (Riegler et al. 2005). The *w*MelCS-like variants
113 provide stronger viral protection, reach higher intracellular bacterial titers in males, and often

114 shorten lifespan compared to the more benign *w*Mel-like variants that now predominate.
115 Additionally, uninfected *D. melanogaster* and those infected with *w*Mel-like variants have a
116 higher temperature preference than *D. melanogaster* infected with *w*MelCS-like variants
117 (including *w*MelPop) (Truitt et al. 2019).
118
119 To assess the specificity of our initial observation that *w*Mel rescues the female fertility
120 phenotype of the $bam^{BW}/bam^{\Delta 59}$ hypomorphic mutant, we made use of a genetic tool for
121 functionally assessing *W. pipientis* variation generated by Chrostek et al. (Chrostek et al.
122 2013), a set of w^{1118} isogenic lines individually infected with ten diverse *w*Mel *W. pipientis*
123 variants from two of the *w*Mel-like clades and the *w*MelCS-like clade defined by Richardson et
124 al (Richardson et al. 2012). The ten *W. pipentis* variants that we analyze thus include both
125 phenotypic classes of *w*Mel variants: the *w*MelCS-like variants which are higher titer, reduce
126 host lifespan, and confer higher viral resistance and lower thermal preference in contrast to the
127 more recent *w*Mel-like variants.
128
129 Since fertility is a phenotype affected by genome-wide variation and both the bam^{BW} and
130 $bam^{\Delta 59}$ alleles were generated in non-isogenic backgrounds, we sought to control the
131 *Drosophila* genetic background to better isolate the effect of *W. pipientis* variation and *bam*
132 genotype on fertility. We used CRISPR/Cas9 to edit the single amino acid change of the
133 original bam^{BW} hypomorph (Ohlstein et al. 2000) into the w^{1118} isogenic background, and also
134 to create a new *bam* null allele in the same genetic background. Additionally, we had
135 previously not been able to determine the phenotype of bam^{BW}/bam^{BW} females, as the bam^{BW}
136 allele was isolated over 20 years ago and then maintained over a balancer chromosome which

allowed the mutation carrying chromosome to accumulated recessive lethal mutations. Thus, we also used these new lines to analyze *bam* hypomorph and null alleles as homozygotes and transheterozygotes.

We confirmed that the amino acid replacement results in the *bam* hypomorphic phenotype previously described when expressed over a *bam* null allele in uninfected females (Flores et al. 2015). Interestingly, we further show that uninfected females homozygous for the *bam* hypomorphic allele do not exhibit GSC tumors or show reduced fertility compared to wildtype females. We then assessed the effect of infection by the individual *W. pipientis* variants by crossing the cytoplasmic maternal backgrounds infected with each *W. pipientis* variant into our w^{1118} *bam* hypomorph line thereby maintaining the same nuclear background (except for the *bam* locus).

We find that all *w*Mel *W. pipientis* variants tested here do not increase fertility in the wildtype *bam* background, but all *w*Mel *W. pipientis* variants rescue the fertility of *bam* mutant females, with *w*MelCS-like *W. pipientis* showing the highest rescue effects. Therefore, the fertility rescue of the *bam* hypomorph by *W. pipientis* is not due to an overall increase in fertility modulated by *W. pipientis*, but a specific interaction between *bam* and *W. pipientis* genotypes.

Materials and Methods

Fly stocks and rearing:

Prior to experiments, we raised fly stocks on standard cornmeal molasses food at room temperature. We used yeast glucose food for fertility assays. During experiments, we

160 maintained crosses and stocks in an incubator at 25°C with a 12-hour light-dark cycle. The
161 lines carrying the classic *bam* alleles, $bam^{\Delta 59}$ (null) and bam^{BW} (hypomorph) are described on
162 Flybase (Thurmond et al. 2019) and in Flores et. al (Flores et al. 2015). The *W. pipientis*
163 infected w^{1118} isogenic lines used in this study were generous gifts from Luis Texiera and
164 described in (Chrostek et al. 2013). We used CantonS males for the w^{1118}; bam^{L255F}/bam^{null}
165 and w^{1118}; bam^{+}/bam^{+} fertility assays. We used w^{1118} isogenic males for the w^{1118};
166 bam^{L255F}/bam^{L255F} fertility assays. We verified that males were uninfected with *W. pipientis* by
167 endpoint PCR and qPCR using primers described below. To generate the *bam* hypomorphic
168 lines infected with the ten different *W. pipientis* variants, we crossed females from the w^{1118};
169 TM2/TM6 stock infected with each variant to w^{1118}; bam^{L255F}/TM6 males.
170
171 **Generation of *bam* alleles with CRISPR/Cas9:**
172 We engineered the new bam^{L255F} hypomorph and *bam* null alleles described in this study in the
173 w^{1118} isogenic background using synthetic gRNAs and Cas9 protein as follows.
174
175 <u>gRNAs</u>:
176 We used the flyCRISPR target finder to choose gRNAs with zero predicted off-targets in the *D.*
177 *melanogaster* genome (Supplement Table S1). We then ordered synthetic gRNAs (sgRNA)
178 from Synthego.
179
180 <u>Cloning</u>:
181 We generated all PCR products for cloning with NEB High Fidelity Q5 master mix, and gel
182 extracted and purified PCR products using the Qiagen MinElute gel extraction kit. We created

183 the donor plasmid for homology directed repair using the NEB HiFi assembly cloning kit and
184 the pHD-attP-DsRed vector from flyCRISPR (Gratz et al. 2014). For plasmid prep, we used
185 Qiagen plasmid plus midi-prep kit and sequenced plasmids with Sanger sequencing (Cornell
186 BRC Genomics Core). We ordered primers for PCR, sequencing, and cloning from IDTDNA
187 (Supplement Table S2).
188
189 Donor sequences:
190 To generate the hypomorphic *bam*^{L255F} allele we designed a single stranded oligo donor
191 (ssODN) that contained the single amino acid mutation of the original *bam*^{BW} hypomorphic
192 allele (CTT->TTT) as well as a single synonymous change to the closest preferred codon in
193 order to kill the gRNA site upon homology directed repair. We used 80 bp of homology on each
194 side of our targeted change (Supplement Table S1).
195
196 To generate the null *bam*$^{null\text{-}In2\text{-}3xP3\text{-}DsRed}$ allele, we amplified 1.5 kb homology arms from the
197 *w*^{1118} isogenic line and cloned them into the pHD-attP-DsRed vector from flyCRISPR
198 (Supplement Table S3). As we did not need the attP site in our line, we amplified the 3xP3-
199 DsRed cassette from the plasmid and assembled the homology arms, 3xP3-DsRed, and the
200 original vector backbone with the NEB HiFi assembly kit, thereby removing the attP site.
201
202 Injections:
203 All CRISPR/Cas9 injections were sourced to Genetivision and were done in the *w*^{1118} isogenic
204 line. The injection mix contained plasmid or ssODN donor, sgRNAs, Cas9 protein (Synthego),
205 and an siRNA for Lig4 (IDT DNA, Supplement Table S1).

206

207 For the *bam*$^{null\text{-}In2\text{-}3xP3\text{-}DsRed}$ allele, we screened for the eye color cassette in F1's in house using
208 a Nightsea fluorescent system (DsRed filters). For the *bam*^{L255F} allele, the edited nucleotide
209 change disrupts an AflII restriction site, allowing us to screen F1's by PCR (Promega GoTaq
210 mastermix) followed by restriction digests with AflII (NEB). We prepared genomic DNA using
211 the Qiagen PureGene kit.

212

213 We backcrossed females of all CRISPR/Cas9 mutants to w^{1118} isogenic males for three
214 generations, and then crossed the mutants to the w^{1118}; TM2/TM6 line to maintain the *bam*
215 mutants over the TM6 balancer. All CRISPR/Cas9 edits in the lines were confirmed by Sanger
216 sequencing (Cornell BRC Genomics Facility).

217

218 **PCR assays to detect *W. pipientis*:**

219 To test for the presence of *W. pipientis*, we used the Zymo quick DNA miniprep kit to prepare
220 DNA from three replicate samples each with three female flies. For each sample, we used
221 three different primers for endpoint or qPCR (Supplement Table S1). We used the common
222 *wsp* primers (Flores et al. 2015), a primer pair targeting *DprA*, and a highly sensitive primer
223 pair to the ARM repeat (Schneider et al. 2014) for endpoint PCR, modified here for qPCR)
224 (Supplement Table S2).

225

226 **Immunostaining:**

227 We performed immunostaining as described in Aruna et al. (Aruna et al. 2009) and Flores et
228 al. (Flores et al. 2015). Briefly, we dissected ovaries in ice cold 1X PBS and pipetted the tissue

229 up and down to improve antibody permeability. We fixed ovaries in 4% paraformaldehyde
230 (EMS), washed with PBST (1X PBS, 0.1% Triton-X 100), blocked in PBTA (1X PBS, 0.1%
231 Triton-X 100, 3% BSA) (Alfa Aesar), and then incubated in the appropriate primary antibody
232 overnight. We then washed, blocked, and incubated in the appropriate secondary antibody for
233 two hours then washed and mounted in ProLong Glass NucBlue for imaging (ThermoFisher).
234 We used an anti-Vasa antibody from Santa Cruz biologicals (anti-rabbit, 1:200) and a goat
235 anti-rabbit secondary antibody from Invitrogen (Alexa Fluor Plus 488 1:500). We imaged
236 ovaries on a Zeiss i880 confocal microscope with 405 and 488 nm laser lines at 40X (Plan-
237 Apochromat 1.4 NA, oil) (Cornell BRC Imaging Core). We analyzed and edited images using
238 Fiji (ImageJ).
239
240 **Assays for nurse cell positive egg chambers:**
241 We used the same assay we previously described to assess the rescue of the original
242 $bam^{BW}/bam^{\Delta 59}$ hypomorphic cytological phenotype by *W. pipientis* (Flores et al. 2015). We
243 dissected ovaries from mated 2-4 day old $bam^{L255F}/bam^{null\text{-}In2\text{-}3xP3\text{-}DsRed}$ females for all *W.*
244 *pipientis* variants and the uninfected control in PBS. Ovaries were fixed in 4%
245 paraformaldehyde (EMS), washed with PBST (1X PBS, 0.1% Triton-X 100), and then mounted
246 in ProLong Glass with NucBlue (ThermoFisher). We imaged ovaries on a Zeiss i880 confocal
247 microscope with a 405 nm laser line at 10X (C-Apochromat 0.45 NA, water) and 40X
248 (described above). We analyzed and edited images using Fiji (ImageJ). Developing ovaries
249 consist of cysts containing differentiated nurse cells which are polyploid and feature large,
250 easily identifiable nuclei. In contrast, GSC daughter differentiation is blocked in *bam* loss-of-
251 function ovaries resulting in cysts filled with small GSC-like cells with small nuclei. To quantify

252 the rescue of *bam's* differentiation function, we counted the number of nurse cell positive egg
253 chambers (cysts) per ovary for uninfected females and females infected with each *W. pipientis*
254 genotype (as these ovaries are small and underdeveloped, they stay intact during the fixation
255 and washing steps).
256
257 **Fertility Assays:**
258 We used the following w^{1118} isogenic *bam* genotypes for the fertility assays: w^{1118}; bam^{+}/bam^{+},
259 w^{1118}; $bam^{L255F}/bam^{null\text{-}In2\text{-}3xP3\text{-}DsRed}$, and w^{1118}; bam^{L255F}/bam^{L255F}. Additionally, we performed a
260 small control fertility assay using combinations of the alleles described above and the classic
261 bam^{BW} hypomorph and $bam^{\Delta 59}$ alleles.
262
263 We performed the fertility assays for w^{1118}; bam^{+}/bam^{+} and w^{1118}; $bam^{L255F}/bam^{null\text{-}In2\text{-}3xP3\text{-}DsRed}$
264 in three batches to reduce technical error from too large of an experiment. We included
265 separate uninfected controls in each batch of *W. pipientis* variants and used these to make
266 statistical comparisons of mean progeny per female.
267
268 We performed all fertility assays (except for the small bam^{BW} and $bam^{\Delta 59}$ analysis) as follows
269 (and described by Flores et al. 2015):
270 We collected virgin females and aged them 2-3 days, only using flies that eclosed within 48
271 hours of each other to reduce developmental variation. We collected virgin males uninfected
272 with *W. pipientis* and aged them for 2-3 days. We distributed males from different bottles
273 across the female genotypes to control for any bottle effects. We individually crossed virgin
274 females to two virgin males. The trio were allowed to mate for 8 days, and then flipped to new

275 vials. After the second 8 days the trio was cleared. The progeny for each trio was counted
276 every other day to get the total adult progeny per female. Progeny per female is reported in
277 increments by day that reflect the days after the first progeny eclosed. For example, we report
278 total progeny for days 1-9 which are the progeny counted on day 1 of eclosion to day 9 of
279 eclosion.
280
281 For the control fertility assay containing the bam^{BW} hypomorph and $bam^{\Delta 59}$ alleles, we
282 collected and aged flies as described above, except the progeny per trio was counted only
283 once at the end of the experiment.
284
285 **Egg Laying Assay:**
286 We collected virgin females for each genotype and *W. pipientis* variant and CantonS virgin
287 males and aged them as described above for the fertility assays. We allowed each trio to mate
288 for 24 hours on grape juice agar supplemented with yeast before flipping them to a new grape
289 juice agar vial. We counted the eggs laid within 24 hours and repeated this for three days.
290
291 **Statistics:**
292 For the nurse cell assay, egg laying assay, and fertility assays we used estimation statistics to
293 assess the mean difference (effect size) of nurse cells, eggs, and adult progeny between
294 infected and uninfected lines. All estimation statistics were done using the dabest package in
295 Python (v. 0.3.1) with 5000 bootstrap resamples (Ho et al. 2019). Estimation statistics provide
296 a non-parametric alternative to other statistical tests of the difference of the mean (for
297 example, ANOVA), and allow us to understand the magnitude of the effect of *W. pipientis*

variation on the *bam* phenotype. We display the data with a swarm plot that shows all of the data points and either a Cumming estimation plot (for more than two sample comparisons) or a Gardner-Altman plot (two sample comparisons) that shows the effect size for each sample compared to the control and 95% bootstrap confidence interval. In text, we report significance as a mean difference (effect size) outside the 95% bootstrap confidence interval.

Data Availability:

Fly lines and plasmids used in this study are available upon request. The authors affirm that all data necessary for confirming the conclusions of the article are present within the article, figures, and tables.

308 # Results

309 ### *bam*^{L255F} is a hypomorphic *bam* allele

310 We used CRISPR/Cas9 to recreate the same *bam* hypomorphic mutation as the original
311 *bam*^{BW} allele (Ohlstein et al. 2000) and a new *bam* null allele in the isogenic *w*^{1118} background.
312 Therefore, we have two new *bam* mutant alleles, *bam*^{L255F} and *bam*$^{null\text{-}In2\text{-}3xP3\text{-}DsRed}$ in the same
313 genetic background so we can compare wildtype bam fertility, the transheterozygous
314 hypomorph/null fertility (as we did previously with *bam*^{BW}/*bam*$^{\Delta 59}$) as well as assess the
315 phenotype of a the homozygous *bam* hypomorphic genotype which has never been assessed
316 before.

317

318 We evaluated if the *w*^{1118}; *bam*^{L255F} allele recapitulated the *bam*^{BW}/*bam*$^{\Delta 59}$ mutant phenotypes
319 by assessing the phenotype of a transheterozygous *w*^{1118}; *bam*^{L255F} hypomorph over a *bam*
320 null allele. Since we wanted all of our alleles in the same genetic background and there were
321 no existing *bam* null alleles in the *w*^{1118} isogenic background, we used CRISPR/Cas9 to knock
322 in a 3xP3-DsRed cassette into the second intron of *bam*, which resulted in a *bam* null allele in
323 the same *w*^{1118} background marked with a trackable eye marker (*w*^{1118}; *bam*$^{null\text{-}In2\text{-}3xP3\text{-}DsRed}$, Fig
324 1B). Females homozygous for this *bam*$^{null\text{-}In2\text{-}3xP3\text{-}DsRed}$ allele exhibit the expected tumorous
325 ovary phenotype with no developing nurse cell-positive cysts and are sterile (Fig 2A, fertility
326 data not shown).

327

328 We then assessed the phenotype of the *bam*^{L255F} allele as a transheterozygous mutant over
329 our new *bam*$^{null\text{-}In2\text{-}3xP3\text{-}DsRed}$ in the same *w*^{1118} isogenic background. We observed a large
330 fertility defect, but the females were not sterile (Fig 3). The *bam*^{L255F}/ *bam*$^{null\text{-}In2\text{-}3xP3\text{-}DsRed}$

331 ovaries exhibited the expected tumorous ovary phenotype, with the presence of some
332 differentiating, nurse cell positive cysts indicating that *bam* is partially functional, and thus that
333 this single amino acid change fully explains the original bam^{BW} hypomorphic phenotype (Fig
334 2B). To further verify the nature of the bam^{L255F} allele, we assessed its phenotype over one of
335 the classic *bam* null alleles that we previously used to study the interaction between *bam* and
336 *W. pipientis,* $bam^{\Delta 59}$. The $bam^{\Delta 59}$ null allele is a nearly full deletion of the *bam* coding
337 sequence. We examined ovaries from bam^{L255F}/ $bam^{\Delta 59}$ females and observed the tumorous
338 ovary phenotype with some developing cysts as has been previously documented for
339 bam^{BW}/$bam^{\Delta 59}$ and additionally shown here (Fig 2C&D). We measured the fertility of bam^{L255F}/
340 $bam^{\Delta 59}$ females and observed a large fertility defect, consistent with the fertility of the bam^{L255F}/
341 $bam^{null\text{-}In2\text{-}3xP3\text{-}DsRed}$ genotype (Fig 3). Therefore, the bam^{L255F}/ $bam^{null\text{-}In2\text{-}3xP3\text{-}DsRed}$ cytological
342 and fertility phenotypes are consistent with the previously documented *bam* hypomorph
343 phenotypes.
344
345 As the bam^{BW} allele is homozygous lethal due to accumulated recessive lethal mutations on
346 the third chromosome, we used our bam^{L255F} allele to ask if the homozygous bam^{L255F} females
347 also had a hypomorphic phenotype. We asked if bam^{L255F}/bam^{L255F} females also exhibited the
348 classic *bag of marbles* cytological phenotype and reduced fertility. In contrast to the tumorous
349 ovary phenotype of bam^{BW}/$bam^{\Delta 59}$ and bam^{L255F}/ $bam^{null\text{-}In2\text{-}3xP3\text{-}DsRed}$, a result of a defect in
350 *bam*'s differentiation function which causes GSC-like cells to over-proliferate, we found no
351 evidence of tumorous cysts in ovaries of bam^{L255F} /bam^{L255F} females (Fig 2F). These ovaries
352 resembled those of a wildtype *bam* background, with all developing egg chambers featuring
353 nurse cells (Fig 2E). Previously we were unable to compare the fertility of the bam^{BW}

354 hypomorph to wildtype *bam* fertility as fertility is greatly affected by different genetic
355 backgrounds. We compared the fertility of the w^{1118}; bam^{L255F} /bam^{L255F} females to w^{1118};
356 bam^{+}/bam^{+} females and found that the mean difference in total progeny per female between
357 the two genotypes was not significantly different (Fig 2G). While we did not measure all
358 aspects of *bam* function of this genotype, the fertility and cytological data here indicate that the
359 bam^{L255F} /bam^{L255F} genotype does not cause a severe *bam* mutant phenotype, as we observed
360 previously for the transheterozygous bam^{BW} hypomorph (bam^{BW}/$bam^{\Delta 59}$). Therefore, two
361 copies of the bam^{L255F} allele are sufficient for germline stem cell daughter differentiation and
362 fertility.
363
364 Although we cannot make strong claims about the effect of *bam* genotype on fertility between
365 lines with different genetic backgrounds, we did perform a small control experiment to ask if
366 our new bam^{L255F} hypomorphic allele over the classic bam^{BW} hypomorphic allele also show
367 similar fertility to wildtype females as we observed for bam^{L255F}/bam^{L255F} females. We
368 observed that bam^{L255F}/bam^{BW} females and homozygous bam^{L255F} females did not show
369 significantly different fertility from w^{1118} bam^{+}/bam^{+} females (Fig 3). Further, we asked if our
370 new bam^{L255F}/$bam^{null\text{-}In2\text{-}3xP3\text{-}DsRed}$ genotype showed a similar fertility defect to bam^{L255F}/$bam^{\Delta 59}$
371 (classic null) and found that both showed severely reduced fertility compared to wildtype (Fig
372 3). These data further confirm that our new bam^{L255F} and $bam^{null\text{-}In2\text{-}3xP3\text{-}DsRed}$ alleles behave
373 similarly to alleles we have used in the past to study the interaction between *bam* and *W.*
374 *pipientis.*
375

376 Since we were able to successfully recapitulate the partial-loss of function *bam* cytological and
377 fertility phenotypes with the bam^{L255F}/ $bam^{null\text{-}In2\text{-}3xP3\text{-}DsRed}$ genotype as we have previously
378 described (Flores et al. 2015), but we did not observe the *bam* partial loss of function ovarian
379 cytological phenotype in the bam^{L255F}/bam^{L255F} females, we focused primarily on the effect of
380 *W. pipientis* variation on the bam^{L255F}/ $bam^{null\text{-}In2\text{-}3xP3\text{-}DsRed}$ female fertility and cytological
381 phenotypes.
382
383 For convenience and readability, we will frequently refer to the w^{1118}; $bam^{null\text{-}In2\text{-}3xP3\text{-}DsRed}$ allele
384 as bam^{null} and the w^{1118}; bam^{L255F} allele as bam^{L255F}.

385 **Infection with the ten different *w*Mel variants we assayed does not increase *w*^{1118};**
386 ***bam*$^{+}$/*bam*$^{+}$ isofemale fertility**
387 First, to determine if the *w*Mel *bam* hypomorph rescue is a consequence of a general increase
388 in female fertility induced by *W. pipientis*, we assessed the effect of *W. pipientis* variation on
389 the fertility of *w*^{1118}; *bam*$^{+}$/*bam*$^{+}$ females of which we have lines infected with ten different *w*Mel
390 variants of *W. pipientis* as described by Chrostek et al. (Chrostek et al. 2013) (Fig 4A).
391
392 Here, fertility measured over multiple days reflects progeny produced cumulatively by the
393 female over time, although there could also be variation in development time of the progeny.
394 We first assessed the effect of *W. pipientis* variation on wildtype *bam* female fertility (*w*^{1118};
395 *bam*$^{+}$/*bam*$^{+}$). Over 17 days, we counted the progeny produced by each test female infected
396 individually for each of the ten *W. pipientis* variants and assessed the mean difference of adult
397 progeny from uninfected control females. We found that none of the *W. pipientis* variants
398 increased female fertility in the wildtype *bam* background, and some lines showed a significant
399 decrease in total progeny per female across all days measured (*w*MelPop8X, and
400 *w*MelCS2b_60) (Fig 4B&C). Of the lines that showed a negative impact of *W. pipientis* on
401 fertility, this effect was only significant as the female fly aged. On days 1-9 of progeny eclosion,
402 no *W. pipientis* variant had a significantly negative effect on progeny counts, which is notable
403 as these days represent progeny from eggs laid earlier in the test female's life and thus are
404 more likely to reflect effects of *W. pipientis* variation on fertility in nature (Fig 4B). The variants
405 that showed a significant and large negative effect of *W. pipientis* infection on fertility were both
406 in the *w*MelCS clade (mean difference between -32 and -46 progeny per female for days 1-17
407 Fig 4C). *w*MelCS variants exhibit higher *W. pipientis* titer in males (Chrostek et al. 2013), which

408 if also true in females may negatively impact female fertility if titer gets too high, as this leads
409 apoptosis of infected cells (Chrostek et al. 2014).
410
411 **All *w*Mel variants rescue *bam* hypomorph female fertility but show a range of effect**
412 **sizes.**
413 Our results from the w^{1118}; bam^{+}/bam^{+} fertility assay indicated that none of the *W. pipientis*
414 variants tested have an overall increase in fertility in females (Fig4). We performed the same
415 fertility assay as described above for the w^{1118}; bam^{+}/bam^{+} genotype for the bam^{L255F}/bam^{null}
416 genotype infected with the same ten *W. pipientis* variants. Females of the bam^{L255F}/bam^{null}
417 genotype exhibit tumorous ovaries and are only weakly fertile (Fig 2B, Fig 3). In contrast to the
418 wildtype *bam* lines, in the bam^{L255F}/bam^{null} lines we found that all variants increased female
419 fertility both in the first week of progeny eclosion and throughout the entire measured
420 timeframe with the exception of *w*MelPop2X, as infected females died before the end of the
421 experiment, thus we only report the first week of progeny production for this variant (Fig
422 5A&B). Notably, and some variants had a large effect on female fertility. The variants with the
423 largest effect sizes were in the *w*MelCS-like clade (*w*MelCS2b, *w*MelPop2x, *w*MelPop8x) (Fig
424 5A&B). This fertility rescue is in contrast to the decrease in fertility by the same *W. pipientis*
425 variants in the wildtype *bam* background, especially for *w*MelCS2b which had the largest
426 negative effect on wildtype *bam* fertility, but the largest positive effect on bam^{L255F}/bam^{null}
427 fertility (Fig 5A&B). In all of the lines tested there were many individual females that had no
428 progeny as well as females with varying distributions of progeny. In some of the lines (*w*Mel2a,
429 *w*MelCS2a, *w*MelCS2b) there were outlier females who had large rescue of fertility, some in
430 the range of what we observe for wildtype *bam* fertility (Fig 4B&C). However, for most of the

431 individuals tested, fertility was not fully rescued, e.g., restored to wildtype levels (Fig 4B&C, Fig
432 5A&B). Although the largest effect of *W. pipientis* on bam^{L255F}/bam^{null} rescue was amongst the
433 *w*MelCS-like variants, there were other notable variants outside of the *w*MelCS clade that
434 showed high increase in female fertility, particularly *w*Mel2a. Overall these data further indicate
435 a genetic interaction between *bam* and *W. pipientis* that is specific from the overall effect of *W.*
436 *pipientis* on female fertility.
437

438 **All *w*Mel variants rescue the ovarian *bam* hypomorph cytological defect but to varying**
439 **degrees**

440 Although we wanted to assess the rescue of the *bam* hypomorphic fertility phenotype by *W.*
441 *pipientis* because we can also compare this to the effect of *W. pipientis* on wildtype *bam*
442 fertility, we also wanted to know if genetic variation in *W. pipientis* affected the rescue of the
443 *bam* hypomorphic cytological phenotype. Because fertility is affected by environmental and
444 genetic differences that act in later developmental stages outside of *bam*'s function early in
445 gametogenesis, we also measured the effect of *W. pipientis* variation on the rescue of the
446 cytological *bam* mutant phenotype. Since the partial loss of function of *bam* results in over-
447 proliferation of GSCs and reduced differentiation, we can quantify *bam* function by assaying for
448 differentiated germ cells. The cytological *bam* hypomorphic phenotype in females consists of
449 tumorous ovarioles filled with GSC-like cells, with few properly developing egg chambers (Fig
450 6A). Properly developing egg chambers contain polyploid nurse cells, which feature large,
451 easily identifiable nuclei (Fig 6A, arrowheads). We counted the number of nurse cell positive
452 egg chambers as a measure of GSC daughter differentiation and thus *bam* function. We found
453 that all of the *W. pipientis* variants tested significantly increased the number of nurse cell

454 positive egg chambers, and that *W. pipientis* variants in the *w*MelCS-like clade showed highest
455 numbers of nurse cell positive egg chambers (Fig 7B). We then pooled together the data
456 individually for *w*Mel-like, *w*Mel2-like, and *w*MelCS-like and asked if there was a difference in
457 mean number of cysts containing nurse cells per ovary between each clade (Fig 6C-D). We
458 found that *w*MelCS-like variants had a significantly higher effect size than *w*Mel-like and
459 *w*Mel2-like (Fig6C&D), and that wMel2-like had a higher effect than *w*Mel-like (Fig 6E). These
460 results are consistent with the fertility assay results for the bam^{L255F}/bam^{null} hypomorph
461 genotype, however we observed a more obvious trend of higher *bam* rescue by the *w*MelCS-
462 like variants in this assay. All of the *W. pipientis* variants with the highest effect size of
463 increased *bam* function are in the *w*MelCS-like clade. It is unclear whether this higher rescue is
464 due to titer or another genetic difference between these clades, but these data indicate that
465 genetic variation in *W. pipientis* impacts the *bam* rescue phenotype.
466
467 To ask if the nurse cell positive egg chambers resulted in oocytes capable of development if
468 fertilized, and therefore represent properly differentiated GSC daughters, we picked two
469 representative *W. pipientis* variants of high and low rescue and counted the total number of
470 eggs laid per female over days 1-3. In w^{1118}; bam^{+}/bam^{+} females, neither *W. pipientis* variant
471 affected the number of eggs laid per female (Fig S1A). In contrast to the w^{1118}; bam^{+}/bam^{+}
472 females and consistent with the nurse cell assay, we observed few eggs laid by uninfected
473 w^{1118}; bam^{L255F}/bam^{null} females, with significantly more eggs produced by the lower rescuing
474 *W. pipientis* *w*Mel59, and the highest number of eggs laid by females infected with the high
475 rescuing line, *w*MelCSa_66 (Fig S1B).
476

477 **Homozygous *bam^{L255F}* females exhibit more variable fertility which is not negatively**
478 **affected by *W. pipientis***

479 In light of the variable effect of infection by some *W. pipientis* variants on wildtype *bam* fertility
480 after day 9, and that the uninfected *bam^{L255F}*/*bam^{L255F}* females did not exhibit a statistically
481 significant fertility defect (Fig 2G, Fig 4B&C), we asked if infection by a subset of the *W.*
482 *pipientis* variants we assessed in the wildtype *bam* background had any effect on the fertility of
483 *bam^{L255F}*/*bam^{L255F}* females. We chose three *W. pipientis* variants that did not have a significant
484 effect on wildtype *bam* female fertility for the entire time frame (*w*Mel2a_63, *w*MelCSa_66, and
485 *w*MelCSb_577 Fig 7A&B), and one that had a significant negative effect on female fertility in
486 the second half of the experiment (*w*MelCS2b, Fig 7B). We measured fertility of homozygous
487 females infected with *W. pipientis* variants as previously described. In both *bam*$^{+}$/*bam*$^{+}$ and
488 *bam^{L255F}*/*bam^{L255F}* backgrounds, no *w*Mel variants affected fertility during the first half of the
489 experiment (Fig 4B, Fig 7A). However, in contrast to the *bam*$^{+}$/*bam*$^{+}$ background where
490 *w*MelCS2b negatively affected female fertility across all days measured, we found that in the
491 *bam^{L255F}*/*bam^{L255F}* background *w*MelCS2b did not have a significant effect on female fertility
492 (Fig 7B). Additionally, in contrast to our findings in the *bam*$^{+}$/*bam*$^{+}$ background that *w*Mel2a_63
493 and *w*MelCSa_66 did not significantly affect female fertility, we found that in the
494 *bam^{L255F}*/*bam^{L255F}* background both of these variants had a significantly positive effect on
495 female fertility across all days measured (Fig 7B).
496

497 Overall, we observed a more positive effect of *W. pipientis* on female fertility in the
498 *bam^{L255F}*/*bam^{L255F}* background than in the *bam*$^{+}$/*bam*$^{+}$ background. As the differential effects of
499 *W. pipientis* on female fertility in both *bam* backgrounds were only in older females, this may

500 be related to the general decline in fecundity as the female ages. Although we did not observe
501 a tumorous ovarian phenotype in the *bam*^{L255F}/*bam*^{L255F} females, it is possible that *W. pipientis*
502 is interacting with a subtle *bam* phenotype that becomes more apparent as the fly ages and
503 oogenesis declines. This further indicates that there is an effect of *bam* genotype and *W.*
504 *pipientis* genotype on the interaction between *W. pipientis* and female fertility, and that *W.*
505 *pipientis* does not just generally increase female fertility in a wildtype *bam* background.
506 Additionally, this interaction does not require the *bam* tumor phenotype.
507
508 Interestingly, during days 1-6 uninfected wildtype *bam* females had significantly fewer progeny
509 than uninfected homozygous *bam*^{L255F} females (Fig 7A). We also observed that the total
510 progeny per female of the homozygous *bam*^{L255F} genotype had a wider range than wildtype,
511 which was not impacted by *W. pipientis* and is therefore likely a subtle *bam* mutant phenotype
512 (Fig 7A). As *bam* regulates GSC daughter differentiation, its mis-regulation may increase or
513 decrease fertility.
514

515 ## Discussion

516

517 **Revisiting the phenotypes of classic *bam* alleles using CRISPR/Cas9 in a controlled**
518 **genetic background**

519 We previously reported that infection with *w*Mel rescued the fertility defect of *bam*^{BW}/*bam*$^{\Delta 59}$
520 hypomorphic mutant females (Flores et al. 2015). We sought to better understand this
521 interaction for multiple reasons. The first reason is that we hypothesize that an interaction
522 between *W. pipientis* and *bam* may be driving the adaptive sequence divergence of *bam*.

523 However, in order to understand if and how this interaction could be adaptive, we need to
524 understand the nature of the manipulation of *bam* function by *W. pipientis*. Second, *W.*
525 *pipientis* is of immense interest as a potential means to control vectors of some human
526 diseases (Moreira et al. 2009).
527
528 One such way to find the *W. pipientis* loci necessary for the interaction between bacteria and
529 the host would be to systemically mutagenize the bacteria and then screen for variants that
530 enhance or reduce the phenotype of interest. However, *W. pipientis* are obligate
531 endosymbionts that cannot be cultured, and so are currently not amenable to such genetic
532 manipulation. While some studies have identified *W. pipientis* loci that interact with *D.*
533 *melanogaster* by transgenically expressing *W. pipientis* loci in *D. melanogaster*, this requires
534 identifying candidate *W. pipientis* loci that affect the host phenotype of interest (Ote et al. 2016;
535 Le Page et al. 2017). An alternative method to identify candidate *W. pipientis* loci that affect
536 the host phenotype is to use genetic variation in *W. pipientis* to test for differences in the effect
537 of *W. pipientis* variants on the host phenotype.
538
539 Chrostek et al. (Chrostek et al. 2013) generated isogenic *Drosophila* lines infected with
540 previously described and genetically distinct *w*Mel variants of *W. pipientis*. The original bam^{BW}
541 mutant was not in this host genetic background and thus we would not be able to conclude that
542 any differential interaction between *bam* and these variants was due to *W. pipientis* variation
543 and not host genetic variation. Therefore, we used CRISPR/Cas9 to create the same amino
544 acid mutant present in the original bam^{BW} hypomorph allele in the w^{1118} isogenic background.
545 To ensure we had the tools to assess the *W. pipientis* rescue phenotype as previously

546 described, we also generated a new *bam* null allele using CRISPR/Cas9 in the same w^{1118}
547 genetic background.
548
549 We have now confirmed that these two new alleles behave similarly to the alleles we
550 previously used to document the interaction between *w*Mel and *bam*. Of note, our
551 bam^{L255F}/bam^{null} hypomorph exhibits a stronger fertility defect and GSC daughter differentiation
552 defect in comparison to our previous findings in the $bam^{BW}/bam^{\Delta 59}$ hypomorph (Flores et al.
553 2015). Here, for uninfected bam^{L255F}/bam^{null} females, we observed a mean progeny per female
554 of ~2 and we observed a mean of ~2 cysts containing nurse cells per ovary (Fig 5, Fig 6). For
555 the $bam^{BW}/bam^{\Delta 59}$ hypomorph, we previously observed a mean progeny per female of ~40 and
556 ~2 nurse cell containing cysts per ovariole (Flores et al. 2015). Notably, each ovary contains
557 15-20 ovarioles, so 2 nurse cell containing cysts per ovariole would correspond to ~30-40
558 nurse cell containing cysts per ovary. Therefore, *w*Mel not only rescues the mild GSC daughter
559 differentiation defect in the original $bam^{BW}/bam^{\Delta 59}$ hypomorph, but *w*Mel and the other nine
560 variants tested here also rescue the stronger *bam* GSC daughter differentiation defect we
561 observe in the bam^{L255F}/bam^{null} hypomorph. This is especially notable, since *w*Mel does not
562 rescue fertility or GSC daughter differentiation in *bam* null mutants studied by Flores et al.
563 (2015). Therefore, the *w*Mel rescue of the *bam* mutant phenotype requires some functional
564 *bam* gene product, but is also robust to a more severe fertility and differentiation defect. The
565 difference in severity between the two *bam* hypomorphic genotypes also highlights the
566 importance in controlling genetic background to rigorously assess fecundity phenotypes.
567
568

569 There have been a handful of studies assessing the phenotypes of diverse *W. pipientis* in
570 isogenic backgrounds (Chrostek et al. 2013; Chrostek et al. 2014; Chrostek and Teixeira 2018;
571 Gruntenko et al. 2019), however there have been no documented studies of interactions
572 between *Drosophila* mutants and *W. pipientis* in these backgrounds. Recent work on the
573 interaction between *W. pipientis* and *Sex lethal* in the female germline showed that *W. pipientis*
574 rescues the loss of GSCs in some *Sxl* mutants through a *nanos* dependent interaction with the
575 *W. pipientis* protein TomO (Ote et al. 2016). However, when researchers transgenically
576 expressed *TomO* in *Sxl* hypomorphic ovaries, the GSC number was rescued, but fertility was
577 not. This result indicated that there are other mechanisms *W. pipientis* is using to fully rescue
578 GSC number and fertility in *Sxl* mutants. We believe the strategy we describe here could be
579 used to further define genetic interactions such as the *Sxl* and *W. pipientis* interaction (Starr
580 and Cline 2002). As we and others have also had success with CRISPR/Cas9 in non-
581 *melanogaster* species, we believe this type of systematic analysis could be extended to assess
582 interactions of host genes and *W. pipientis* in other species outside of *Drosophila*
583 *melanogaster*.
584

585 **_w_Mel _W. pipientis_ variants do not broadly increase fertility in the _w_^{1118} genetic**
586 **background**

587 Due to the shared *w*^{1118} genetic background of the *W. pipientis* infected lines, we were able to
588 rigorously assess the effect of different *W. pipientis* variants on wildtype *bam* female fertility. In
589 addressing if and how *W. pipientis* may drive the adaptive evolution of *bam*, it was important
590 for us to know if *W. pipientis* has an effect on fertility in a wildtype *bam* background. Here, we
591 are not measuring specifically how *W. pipientis* is modulating a functional *bam* allele, as fertility

592 is affected by many loci, but if we observed a large effect of a particular *W. pipientis* variant on
593 fertility, this would motivate further experiments to assess functional *bam* activity in lines
594 infected with that *W. pipientis* variant. We observed no line with increased fertility for any of the
595 *W. pipientis* variants, indicating that *W. pipientis* is not generally increasing fertility through
596 *bam* or another pathway in this genetic background. However, we also observed that some *W.*
597 *pipientis* variants had a negative effect on female fertility as the females aged. We cannot
598 distinguish whether this effect is due to *W. pipientis* mis-regulating the germline or some other
599 developmental consequence of its infection. In fact, the lines with the highest reported titers in
600 males showed the largest negative impact on female fertility (Chrostek et al. 2013).
601 Additionally, Serga et. al 2014 reported lower fecundity for females from a natural population in
602 Uman, Ukraine infected with *w*MelCS compared to females infected with *w*Mel. These
603 observations highlight the complexity of the interaction between *W. pipientis* and *Drosophila*,
604 where depending on the genetic background of the host, the fitness effect of *W. pipientis* on a
605 phenotype may vary. This effect could further vary based on aspects of the host's environment
606 where the manipulation of fertility by *W. pipientis* may not always be beneficial. Here we may
607 expect the host and microbe to evolve ways of evading each other, which may become more
608 or less apparent in different genetic backgrounds. Of note, our observations were made under
609 laboratory conditions in a highly inbred line, and so we cannot be sure these *W. pipientis*
610 variants impart the same effects on female fertility in natural populations.
611

612 **_w_Mel _W. pipientis_ variants across three clades genetically interact with _bam_**

613 We previously showed that a single *w*Mel variants partially rescued the fertility and GSC
614 daughter differentiation defect of the $bam^{BW}/bam^{\Delta 59}$ hypomorph. Here we asked if there was

615 variation in the *bam* rescue phenotype among *W. pipientis variants*. The ten variants we used
616 have been fully sequenced and differ by varying degrees of sequence divergence. All ten *W.*
617 *pipientis* variants of the three clades tested (III, VI and VIII; see Fig 4A) rescued the fertility
618 defect and the cytological defect of the bam^{L255F}/bam^{null} hypomorph. Therefore, none of the
619 variants tested contained genetic variation that suppressed the interaction between *bam* and
620 *W. pipientis*. We did find that in both the counts of nurse cell positive egg chambers and the
621 fertility assays, *w*MelCS-like *W. pipientis* variants (clade VI) showed the highest rescue (Fig 5,
622 Fig 6). This pattern was the clearest in the counts of nurse cell positive egg chambers as
623 expected, since the presence of nurse cell positive egg chambers reflects GSC daughter
624 differentiation, a phenotype that is a more direct output of *bam* activity. It is likely that the
625 higher level of variability in the fertility assays is also due to the variable effect the *W. pipientis*
626 variants have on other stages of development post GSC daughter differentiation. However, we
627 feel it is important to also measure the effect of *W. pipientis* on fertility, since we cannot assess
628 the count of nurse cell positive egg chambers for *bam* alleles that do not show a tumorous
629 mutant phenotype, and it gives us insight into how *W. pipientis* infection could be adaptive. For
630 example, would there be a fitness tradeoff between a high fecundity (GSC daughter
631 differentiation) rescue and a low fertility (adult progeny) rescue? Measuring the impact of *W.*
632 *pipientis* on multiple stages of oogenesis and reproduction therefore gives us insight into any
633 further complexities in the interaction between GSC genes and *W. pipientis*.
634
635 We found that the *w*MelCS-like variants had the highest rescue effect on *bam* function, another
636 example of a *W. pipientis* induced *D. melanogaster* fitness phenotype of which *w*MelCS-like
637 variants exhibit the highest effects. The *w*MelCS-like variants tested here also confer the

638 highest levels of viral resistance to *D. melanogaster* males (Chrostek et al. 2013). Additionally,
639 *w*MelCS-like variants have a stronger effect on the thermal preference of the *D. melanogaster*
640 host, with *w*MelCS-like variants conferring preference for cooler temperatures compared to
641 *w*Mel-like and uninfected *D. melanogaster* (Truitt et al. 2019). Another study showed that
642 *w*MelCS-like variants increased stress resistance in *D. melanogaster,* and no observed effect
643 from *w*Mel-like variants (Gruntenko et al. 2017).
644
645 *w*MelPop is a virulent derivative of *w*MelCSb and characterized by uncontrolled proliferation
646 and titer caused by increased copy number of the Octomom locus. *w*MelPop2X and
647 *w*MelPop8X exhibit 2X copies of the Octomom locus and anywhere from 4X-8X copies,
648 respectively (Chrostek and Teixeira 2018).The high rescue of both the cytological and fertility
649 defect of the bam^{L255F}/bam^{null} by *w*MelPop2X is suggestive that titer and possibly other
650 phenotypes that increase interactions with the host are contributing to the rescue of *bam*. We
651 observed lower rescue for *w*MelPop8X, indicating that the increasing copy number of the
652 Octomom locus that causes apoptosis and early death likely negatively affects host fertility
653 (Zhukova and Kiseleva 2012; Chrostek and Teixeira 2018). *w*MelPop2X is closely related to
654 *w*MelCSb, with the only variation between them being a synonymous SNP and the
655 amplification of the octomom locus which contains *W. pipientis* loci predicted to be involved
656 with nucleic acid binding, and thus likely how it increases its titer, as well as proteins with
657 predicted homology to eukaryotic domains (Chrostek and Teixeira 2018). These loci may then
658 increase the interaction of *W. pipientis* and its host (López-Madrigal and Duarte 2020). A
659 natural next step would be to determine the *W. pipientis* factors that manipulate GSC daughter
660 differentiation.

661 **Possible adaptive interactions between *W. pipientis* and *bam***

662 It is well established that disrupting *bam* function negatively effects fertility (McKearin and
663 Spradling 1990; Ohlstein and McKearin 1997; Lavoie et al. 1999; Flores et al. 2015), and
664 bam^{L255F}/bam^{null} females are almost completely sterile. However, we do not predict such
665 deleterious alleles to reach high frequency in natural populations. In fact, we have not found
666 this nucleotide variant segregating in any of the natural populations of *D. melanogaster* that
667 have been sampled in the *Drosophila* genome Nexus (Lack et al. 2015). Thus, while studying
668 this mutant is effective in further refining how *bam* and *W. pipientis* interact, we cannot
669 conclude that this type of interaction occurs in natural populations. However, given the severity
670 of the mutant and strength of *W. pipientis*'s rescue, one hypothesis is that if *W. pipientis* is
671 increasing GSC daughter differentiation when it is not favorable for the host, the host would
672 evolve a way to evade *W. pipientis*'s manipulation of this pathway. In the case of our lab
673 generated mutant, it is possible that when *bam* is not fully functional that reproduction is more
674 sensitive to manipulation by *W. pipientis*. *W. pipientis* have been documented to respond to
675 changes in the host environment, as *W. pipientis* gene expression is affected by host age and
676 sex, and as *W. pipientis* transmission requires functional oogenesis, it reasonable to
677 hypothesize that *W. pipientis* is sensitive to changes in gametogenesis (Rice et al. 2017;
678 Newton and Sheehan 2018; Russell et al. 2020).

679

680 An additional observation we made is that bam^{L255F}/bam^{L255F} females show a broader range of
681 adult progeny per female compared to wildtype *bam* females regardless of *W. pipientis*
682 infection status. The individual bam^{L255F}/bam^{L255F} females exhibit both higher and lower than
683 average fertility, indicating that mis-regulating *bam's* differentiation function could both increase

684 and decrease fertility. This phenotype is worth further investigation, since although *bam* shows
685 a signature of positive selection, we do not know specifically what aspect of *bam* function is
686 adaptive. If variation in *bam* function can both increase and decrease mean fertility, and *W.*
687 *pipientis* has a generally positive effect on fertility of bam^{L255F}/bam^{L255F} females, this is further
688 evidence that *W. pipientis* may be able to manipulate *bam* in order to increase oogenesis for
689 its own benefit, and that genetic variation at *bam* could affect the regulation of oogenesis.
690 Therefore, if *W. pipientis* increased the rate of oogenesis to ensure its own transmission and
691 this was not favorable for the host, *bam* may be in conflict with *W. pipientis* to regulate
692 oogenesis in a favorable manner for the host. Here we see that although the average female
693 fertility of uninfected bam^{L255F}/bam^{L255F} mutants is not significantly different from wildtype, there
694 is a wider distribution of individual female fertility, indicating that the *bam* hypomorphic
695 phenotype is an increased variance in fertility (Fig 7). Since these females are in a common
696 genetic background and we do not expect genetic variation between individual females, the
697 *bam*-mediated mis-regulation of differentiation may set off a cascade of other genetic mis-
698 regulation that results in higher or lower fertility over time. We see that infection by some *W.*
699 *pipientis* variants in this background increases female fertility, indicating that perhaps *W.*
700 *pipientis* can restore the mis-regulation of GSC daughter differentiation, and even increase
701 reproductive output through this mechanism. It would be interesting to use this genotype for
702 future experiments to explore the possibility that this *bam* mutation may disrupt the mechanism
703 *D. melanogaster* evolved to evade *W. pipientis*'s effect on differentiation.
704
705 An interesting question that remains is how *W. pipientis* have evolved in their interaction with
706 GSC genes, including *bam*. While *w*MelCS-like and *w*Mel-like variants share a most recent

707 common ancestor about 8000 years ago, *w*MelCS-like variants were recently (~2000 years
708 ago) replaced by *w*Mel-like variants in natural populations of *D. melanogaster* (Riegler et al.
709 2005; Richardson et al. 2012). However, this replacement has not been complete, and there
710 are global populations still infected with *w*MelCS variants (Riegler et al. 2005; Nunes et al.
711 2008). Interestingly we find that the *w*MelCS variants we assayed show higher rescue of
712 bam^{L255F}/bam^{null} female fertility and nurse cells. If *bam* and *W. pipientis* are evolving in an arms
713 race, it could be that the evolutionarily more recent *w*Mel-like variants have not evolved the
714 same level of interaction with *bam* as *w*MelCS has. Future work to investigate these dynamics
715 should include sampling populations that are still infected with *w*MelCS as well as those
716 infected with *w*Mel and asking if there is any evidence of genetic differentiation at *bam*. Some
717 populations have been identified that are still infected with *w*MelCS, such as a natural
718 population of *D. melanogaster* from Uman, Ukraine that has been infected with both *w*Mel and
719 *w*MelCS and has been monitored yearly for infection frequency, some additional Paleartic
720 populations, and a population in the Netherlands (Early and Clark 2013; Bykov et al. 2019;
721 Serga et al. 2021).
722
723 Additionally, we could utilize existing *W. pipientis* sequence variation from natural populations
724 to ask if there is any evidence of associations between *bam* variation and *W. pipientis*
725 variation. If we were to sample populations that are differentially infected with *w*Mel and
726 *w*MelCS to assess genetic differentiation at *bam* as discussed above, we could also do the
727 same for *W. pipientis* variants. One caveat being that if we did not observe genetic signatures
728 of adaptive evolution in *W. pipientis* loci, this does not mean that *W. pipientis* and *bam* are not
729 coevolving, as we do not know the true infection history of a *Drosophila* population with *W.*

730 *pipientis* and thus which *W. pipientis* variant may have been in conflict with *bam.* Additionally,
731 there may be general *W. pipientis* functions that are interacting with *bam* and not a single locus
732 (e.g., loci that regulate titer).
733
734 Further work should focus on determining the *W. pipientis* loci contributing to the different
735 magnitude of *bam* rescue. However, as has been previously pointed out by Chrostek et al.
736 (Chrostek et al. 2013), between the *w*Mel clades and *w*MelCS clades there are eight indels
737 and 108 SNPs, including differences in the coding sequence of 58 genes. So further work
738 would have to be done to narrow down which variants contribute to the degree of rescue. A
739 next step could be moving out to more divergent *W. pipientis wMel* variants (for example, *w*Au
740 that infects *D. simulans* (Miller and Riegler 2006)) to ask how recently the interaction with *bam*
741 evolved. To complement this, it would be beneficial to perform these same rescue experiments
742 with *bam* hypomorphs in *D. simulans*.
743
744 **Acknowledgements**
745 This work was supported by National Institutes of Health grant R01-GM095793 to C.F.A. We
746 would like to thank Luis Teixeira for his advice on assessing the effect of *W. pipientis* variation
747 on *Drosophila* fertility and for the gifts of the w^{1118} isogenic lines infected with *W. pipientis*
748 variants used in this study. We also would like to thank Kristen Rose Baxter for her
749 contributions to our early fertility experiments. We are also grateful to Mariana F. Wolfner,
750 Andrew G Clark, Miwa Wenzel and Catherine Kagemann for valuable input and discussion of
751 these experiments and results and helpful comments on this manuscript.
752

753 ## References

754

755 Arnold PA, Levin SC, Stevanovic AL, Johnson KN. 2019. Drosophila melanogaster infected
756 with Wolbachia strain wMelCS prefer cooler temperatures. Ecol Entomol.
757 doi:10.1111/een.12696.

758 Aruna S, Flores HA, Barbash DA. 2009. Reduced fertility of Drosophila melanogaster Hybrid
759 male rescue (Hmr) mutant females is partially complemented by Hmr orthologs from
760 sibling species. Genetics. doi:10.1534/genetics.108.100057.

761 Bailly-Bechet M, Martins-Simões P, Szöllosi GJ, Mialdea G, Sagot MF, Charlat S. 2017. How
762 Long Does Wolbachia Remain on Board? Mol Biol Evol. doi:10.1093/molbev/msx073.

763 Bauer DuMont VL, Flores HA, Wright MH, Aquadro CF. 2007. Recurrent positive selection at
764 Bgcn, a key determinant of germ line differentiation, does not appear to be driven by
765 simple coevolution with its partner protein bam. Mol Biol Evol. 24(1):182–191.
766 doi:10.1093/molbev/msl141.

767 Beckmann JF, Ronau JA, Hochstrasser M. 2017. A Wolbachia deubiquitylating enzyme
768 induces cytoplasmic incompatibility. Nat Microbiol. doi:10.1038/nmicrobiol.2017.7.

769 Bykov RA, Yudina MA, Gruntenko NE, Zakharov IK, Voloshina MA, Melashchenko ES,
770 Danilova M V., Mazunin IO, Ilinsky YY. 2019. Prevalence and genetic diversity of
771 Wolbachia endosymbiont and mtDNA in Palearctic populations of Drosophila
772 melanogaster. BMC Evol Biol. doi:10.1186/s12862-019-1372-9.

773 Choi JY, Aquadro CF. 2014. The coevolutionary period of Wolbachia pipientis infecting
774 Drosophila ananassae and its impact on the evolution of the host germline stem cell
775 regulating genes. Mol Biol Evol. doi:10.1093/molbev/msu204.

776 Chrostek E, Marialva MSP, Esteves SS, Weinert LA, Martinez J, Jiggins FM, Teixeira L. 2013.

Wolbachia Variants Induce Differential Protection to Viruses in Drosophila melanogaster: A Phenotypic and Phylogenomic Analysis. PLoS Genet. 9(12):1003896. doi:10.1371/journal.pgen.1003896. [accessed 2020 Oct 6]. http://www.fct.pt.

Chrostek E, Marialva MSP, Yamada R, O'Neill SL, Teixeira L. 2014. High anti-viral protection without immune upregulation after interspecies Wolbachia transfer. PLoS One. 9(6):99025. doi:10.1371/journal.pone.0099025. [accessed 2020 Oct 6]. /pmc/articles/PMC4049622/?report=abstract.

Chrostek E, Teixeira L. 2018. Within host selection for faster replicating bacterial symbionts. PLoS One. doi:10.1371/journal.pone.0191530.

Dedeine F, Vavre F, Fleury F, Loppin B, Hochberg ME, Boulétreau M. 2001. Removing symbiotic Wolbachia bacteria specifically inhibits oogenesis in a parasitic wasp. Proc Natl Acad Sci U S A. doi:10.1073/pnas.101304298.

Deehan M, Lin W, Blum B, Emili A, Frydman H. 2021. Intracellular density of wolbachia is mediated by host autophagy and the bacterial cytoplasmic incompatibility gene cifb in a cell type-dependent manner in drosophila melanogaster. MBio. 12(1):1–19. doi:10.1128/mBio.02205-20.

Dutra HLC, Rocha MN, Dias FBS, Mansur SB, Caragata EP, Moreira LA. 2016. Wolbachia Blocks Currently Circulating Zika Virus Isolates in Brazilian Aedes aegypti Mosquitoes. Cell Host Microbe. doi:10.1016/j.chom.2016.04.021.

Dylan Shropshire J, On J, Layton EM, Zhou H, Bordenstein SR. 2018. One prophage WO gene rescues cytoplasmic incompatibility in Drosophila melanogaster. Proc Natl Acad Sci U S A. doi:10.1073/pnas.1800650115.

Early AM, Clark AG. 2013. Monophyly of Wolbachia pipientis genomes within Drosophila

800 melanogaster: Geographic structuring, titre variation and host effects across five
801 populations. Mol Ecol. doi:10.1111/mec.12530.
802 Flores HA, Bubnell JE, Aquadro CF, Barbash DA. 2015. The Drosophila bag of marbles Gene
803 Interacts Genetically with Wolbachia and Shows Female-Specific Effects of Divergence.
804 doi:10.1371/journal.pgen.1005453.
805 Gratz SJ, Ukken FP, Rubinstein CD, Thiede G, Donohue LK, Cummings AM, Oconnor-Giles
806 KM. 2014. Highly specific and efficient CRISPR/Cas9-catalyzed homology-directed repair
807 in Drosophila. Genetics. 196(4):961–971. doi:10.1534/genetics.113.160713.
808 Gruntenko NE, Ilinsky YY, Adonyeva N V., Burdina E V., Bykov RA, Menshanov PN,
809 Rauschenbach IY. 2017. Various Wolbachia genotypes differently influence host
810 Drosophila dopamine metabolism and survival under heat stress conditions. BMC Evol
811 Biol. doi:10.1186/s12862-017-1104-y.
812 Gruntenko NE, Karpova EK, Adonyeva N V., Andreenkova O V., Burdina E V., Ilinsky YY,
813 Bykov RA, Menshanov PN, Rauschenbach IY. 2019. Drosophila female fertility and
814 juvenile hormone metabolism depends on the type of Wolbachia infection. J Exp Biol.
815 222(4). doi:10.1242/jeb.195347. [accessed 2020 Oct 7].
816 https://jeb.biologists.org/content/222/4/jeb195347.
817 Hague MTJ, Caldwell CN, Cooper BS. 2020. Pervasive effects of wolbachia on host
818 temperature preference. MBio. doi:10.1128/mBio.01768-20.
819 Ho J, Tumkaya T, Aryal S, Choi H, Claridge-Chang A. 2019. Moving beyond P values: data
820 analysis with estimation graphics. Nat Methods. doi:10.1038/s41592-019-0470-3.
821 Hoffmann AA, Montgomery BL, Popovici J, Iturbe-Ormaetxe I, Johnson PH, Muzzi F,
822 Greenfield M, Durkan M, Leong YS, Dong Y, et al. 2011. Successful establishment of

823 Wolbachia in Aedes populations to suppress dengue transmission. Nature.
824 doi:10.1038/nature10356.
825 Insco ML, Bailey AS, Kim J, Olivares GH, Wapinski OL, Tam CH, Fuller MT. 2012. A self-
826 limiting switch based on translational control regulates the transition from proliferation to
827 differentiation in an adult stem cell lineage. Cell Stem Cell. 11(5):689–700.
828 doi:10.1016/j.stem.2012.08.012.
829 Lack JB, Cardeno CM, Crepeau MW, Taylor W, Corbett-Detig RB, Stevens KA, Langley CH,
830 Pool JE. 2015. The drosophila genome nexus: A population genomic resource of 623
831 Drosophila melanogaster genomes, including 197 from a single ancestral range
832 population. Genetics. doi:10.1534/genetics.115.174664.
833 Lavoie CA, Ohlstein B, McKearin DM. 1999. Localization and function of bam protein require
834 the benign gonial cell neoplasm gene product. Dev Biol. doi:10.1006/dbio.1999.9346.
835 Lindsey ARI. 2020. Sensing, signaling, and secretion: A review and analysis of systems for
836 regulating host interaction in wolbachia. Genes (Basel). 11(7):1–21.
837 doi:10.3390/genes11070813. [accessed 2020 Nov 17].
838 /pmc/articles/PMC7397232/?report=abstract.
839 López-Madrigal S, Duarte EH. 2020. Titer regulation in arthropod-Wolbachia symbioses.
840 FEMS Microbiol Lett. doi:10.1093/femsle/fnz232.
841 McKearin DM, Spradling AC. 1990. Bag-of-marbles: A Drosophila gene required to initiate both
842 male and female gametogenesis. Genes Dev. 4(12 B):2242–2251.
843 doi:10.1101/gad.4.12b.2242.
844 Miller WJ, Riegler M. 2006. Evolutionary dynamics of wAu-like Wolbachia variants in
845 neotropical Drosophila spp. Appl Environ Microbiol. doi:10.1128/AEM.72.1.826-835.2006.

846 Moreira LA, Iturbe-Ormaetxe I, Jeffery JA, Lu G, Pyke AT, Hedges LM, Rocha BC, Hall-
847 Mendelin S, Day A, Riegler M, et al. 2009. A Wolbachia Symbiont in Aedes aegypti Limits
848 Infection with Dengue, Chikungunya, and Plasmodium. Cell.
849 doi:10.1016/j.cell.2009.11.042.
850 Newton ILG, Sheehan KB. 2018. Gateway Entry Vector Library of Wolbachia pipientis
851 Candidate Effectors from Strain wMel. Microbiol Resour Announc.
852 doi:10.1128/mra.00806-18.
853 Nunes MDS, Nolte V, Schlötterer C. 2008. Nonrandom Wolbachia infection status of
854 Drosophila melanogaster strains with different mtDNA haplotypes. Mol Biol Evol.
855 25(11):2493–2498. doi:10.1093/molbev/msn199. [accessed 2020 Oct 6].
856 https://academic.oup.com/mbe/article/25/11/2493/1094848.
857 Ohlstein B, Lavoie CA, Vef O, Gateff E, Mckearin DM. 2000. The Drosophila Cystoblast
858 Differentiation Factor, benign gonial cell neoplasm, Is Related to DExH-box Proteins and
859 Interacts Genetically With bag-of-marbles. [accessed 2020 Apr 14]. http://www.fruitfly.org.
860 Ohlstein B, McKearin D. 1997. Ectopic expression of the Drosophila Bam protein eliminates
861 oogenic germline stem cells. Development.
862 Ote M, Ueyama M, Yamamoto D. 2016. Wolbachia Protein TomO Targets nanos mRNA and
863 Restores Germ Stem Cells in Drosophila Sex-lethal Mutants. Curr Biol. 26(17):2223–
864 2232. doi:10.1016/j.cub.2016.06.054.
865 Ote M, Yamamoto D. 2020. Impact of Wolbachia infection on Drosophila female germline stem
866 cells. Elsevier Inc. [accessed 2020 Apr 10]. https://doi.org/10.1016/j.cois.2019.10.001.
867 Le Page DP, Metcalf JA, Bordenstein Sarah R., On J, Perlmutter JI, Shropshire JD, Layton
868 EM, Funkhouser-Jones LJ, Beckmann JF, Bordenstein Seth R. 2017. Prophage WO

genes recapitulate and enhance Wolbachia-induced cytoplasmic incompatibility. Nature. doi:10.1038/nature21391.

Rice DW, Sheehan KB, Newton ILG. 2017. Large-scale identification of Wolbachia pipientis effectors. Genome Biol Evol. doi:10.1093/gbe/evx139.

Richardson MF, Weinert LA, Welch JJ, Linheiro RS, Magwire MM, Jiggins FM, Bergman CM. 2012. Population Genomics of the Wolbachia Endosymbiont in Drosophila melanogaster. Kopp A, editor. PLoS Genet. 8(12):e1003129. doi:10.1371/journal.pgen.1003129. [accessed 2020 Oct 6]. https://dx.plos.org/10.1371/journal.pgen.1003129.

Riegler M, Sidhu M, Miller WJ, O'Neill SL. 2005. Evidence for a global Wolbachia replacement in Drosophila melanogaster. Curr Biol. doi:10.1016/j.cub.2005.06.069.

Russell Shelbi L, Castillo Jennie Ruelas, Russell S L, Castillo J R. 2020. Chapter 5 Trends in Symbiont-Induced Host Cellular Differentiation. doi:10.1007/978-3-030-51849-3_5. https://doi.org/10.1007/978-3-030-51849-3_5.

Schneider DI, Klasson L, Lind AE, Miller WJ. 2014. More than fishing in the dark: PCR of a dispersed sequence produces simple but ultrasensitive Wolbachia detection. BMC Microbiol. doi:10.1186/1471-2180-14-121.

Serga S V., Maistrenko OM, Matiytsiv NP, Vaiserman AM, Kozeretska IA. 2021. Effects of Wolbachia infection on fitness-related traits in Drosophila melanogaster. Symbiosis. doi:10.1007/s13199-020-00743-3.

Shropshire JD, Rosenberg R, Bordenstein SR. 2021. The impacts of cytoplasmic incompatibility factor (cifA and cifB) genetic variation on phenotypes. Genetics.(iiyaa007):1–8. doi:10.1093/genetics/iyaa007.

Starr DJ, Cline TW. 2002. A host-parasite interaction rescues Drosophila oogenesis defects.

892 Nature. 418(6893):76–79. doi:10.1038/nature00843.
893 Thurmond J, Goodman JL, Strelets VB, Attrill H, Gramates LS, Marygold SJ, Matthews BB,
894 Millburn G, Antonazzo G, Trovisco V, et al. 2019. FlyBase 2.0: The next generation.
895 Nucleic Acids Res. doi:10.1093/nar/gky1003.
896 Ting X. 2013. Control of germline stem cell self-renewal and differentiation in the *Drosophila*
897 ovary: concerted actions of niche signals and intrinsic factors. Wiley Interdiscip Rev Dev
898 Biol. 2(2):261–273. doi:10.1002/wdev.60. [accessed 2020 May 4].
899 http://doi.wiley.com/10.1002/wdev.60.
900 Truitt AM, Kapun M, Kaur R, Miller WJ. 2019. Wolbachia modifies thermal preference in
901 Drosophila melanogaster. Environ Microbiol. doi:10.1111/1462-2920.14347.
902 Utarini A, Indriani C, Ahmad RA, Tantowijoyo W, Arguni E, Ansari MR, Supriyati E, Wardana
903 DS, Meitika Y, Ernesia I, et al. 2021. Efficacy of Wolbachia-Infected Mosquito
904 Deployments for the Control of Dengue. N Engl J Med. 384(23):2177–2186.
905 doi:10.1056/NEJMoa2030243. [accessed 2021 Jun 16].
906 http://www.nejm.org/doi/10.1056/NEJMoa2030243.
907 Werren JH, Baldo L, Clark ME. 2008. Wolbachia: Master manipulators of invertebrate biology.
908 Nat Rev Microbiol. doi:10.1038/nrmicro1969.
909 Zhukova M V., Kiseleva E. 2012. The virulent Wolbachia strain wMelPop increases the
910 frequency of apoptosis in the female germline cells of Drosophila melanogaster. BMC
911 Microbiol. 12(SUPPL. 1):S15. doi:10.1186/1471-2180-12-S1-S15.
912 http://www.biomedcentral.com/1471-2180/12/S1/S15.
913

Figure Legends

Fig 1. Design for recreating the classic *bam^{BW}* hypomorph allele and a new *bam* null allele in the *w^{1118}* isogenic background with CRISPR/Cas9 (A) Schematic of the *bam* gene region showing the single gRNA target site in the second exon and the hypomorphic missense mutation. (B) Schematic of the *bam* gene region showing the single gRNA target site in the second intron with the 3xP3-DsRed eye marker to create a *bam* null allele.

Fig 2. The *bam^{BW}* hypomorphic allele and a novel *bam* null allele in the *w^{1118}* isogenic background recapitulates the classic *bam* phenotypes. (A) The newly generated *bam$^{null\text{-}In2\text{-}3xP3\text{-}DsRed}$/bam$^{null\text{-}In2\text{-}3xP3\text{-}DsRed}$* genotype results in tumorous ovaries (arrow). (B) The recreated *bam^{L255F}* mutation over *bam$^{null\text{-}In2\text{-}3xP3\text{-}DsRed}$* exhibits tumorous ovaries in the *w^{1118}* isogenic background (arrow). (C) The recreated *bam^{L255F}* mutation over the classic *bam$^{\Delta 59}$* null allele exhibits tumorous ovaries (arrow). (D) The classic *bam^{BW}/bam$^{\Delta 59}$* hypomorphic genotype exhibits tumorous ovaries (arrow). (E) Ovaries from the *w^{1118}* isogenic line wildtype for *bam* do not exhibit any germline tumors and show developing egg chambers with large nurse cell nuclei (arrowhead). (F) *bam^{L255F}/bam^{L255F}* homozygotes do not exhibit tumorous ovaries, indicating two copies of the partial loss of function *bam^{L255F}* mutation is sufficient for GSC daughter differentiation. (G) *w^{1118}* females and *bam^{L255F}/ bam^{L255F}* females do not show a significant difference in fertility (mean difference of progeny per female), further indicating that two copies of *bam^{L255F}* is sufficient for *bam* function.

Fig 3. Female fertility of genotypes containing the *w^{1118}; bam^{L255F}* hypomorphic allele are consistent with those of classic alleles. Swarm and Cumming estimation plots of a control fertility experiment showing that the fertility of *bam^{L255F}/ bam^{L255F}* females is not significantly

different from w^{1118} (mean difference = 3.6), nor are bam^{L255F}/bam^{BW} females (mean difference = 17.9). $bam^{L255F}/$ $bam^{null\text{-}In2\text{-}3xP3\text{-}DsRed}$ females have significantly lower fertility compared to wildtype (mean difference = -44.6, bootstrap 95% confidence interval, effect size), as do $bam^{L255F}/bam^{\Delta 59}$ females (mean difference = -36.7, bootstrap 95% confidence interval, effect size).

Fig 4. Total progeny per female and mean difference of progeny per female for the w^{1118}; bam^{+}/bam^{+} genotype infected with ten *W. pipientis* *w*Mel variants compared to uninfected. (A) Cladogram adapted from Chrostek et al. 2013 showing the relationships and clade assignments for the *W. pipientis* variants tested in this study. (B) Swarm and Cumming estimation plots showing the total progeny per female for each *W. pipientis* infected line counted on days 1-9 post eclosion. As the fertility assays were performed in batches, each batch is compared to its own uninfected control. No *W. pipientis* variant was associated with a significant difference in fertility for wildtype *bam* females over days 1-9 post eclosion (bootstrap 95% confidence interval, effect size). (C) Swarm and Cumming estimation plots showing the total progeny per female for each *W. pipientis* infected line counted on days 1-17 post eclosion. As the fertility assays were performed in batches, each batch is compared to its own uninfected control. *W. pipientis* variants *w*MelPop8X, and *w*MelCS2b were associated with significantly lower fertility over the longer period of days 1-17 post eclosion compared to uninfected controls (bootstrap 95% confidence interval, effect size)

Fig 5. Total progeny per female and mean difference of progeny per female for the w^{1118}; bam^{L255F}/bam^{null} genotype infected with ten *W. pipientis* *w*Mel variants compared to uninfected. (A) Swarm and Cumming estimation plots showing the total progeny per female for each *W. pipientis* infected line counted on days 1-9 post eclosion. As the fertility assays were

performed in batches, each batch is compared to its own uninfected control. All *W. pipientis* variants were associated with significant increases in female fertility compared to uninfected controls (bootstrap 95% confidence interval, effect size). (B) Swarm and Cumming estimation plots showing the total progeny per female for each *W. pipientis* infected line counted on days 1-17 post eclosion. As the fertility assays were performed in batches, each batch is compared to its own uninfected control. All *W. pipientis* variants were associated with significant increases in female fertility compared to uninfected controls (bootstrap 95% confidence interval, effect size). *w*MelPop2X is not reported for this time frame, as most females died after day 9.

Fig 6. Total cysts containing nurse cells per ovary and mean difference of nurse cell positive cysts for the w^{1118}; bam^{L255F}/bam^{null} genotype infected with ten *W. pipientis* wMel variants compared to uninfected. (A) Representative images of bam^{L255F}/bam^{null} ovaries from uninfected, *w*Mel59, and *w*Melpop2X infected females. Nurse cell positive cysts labeled with arrowheads. (B) Swarm and Cumming estimation plots showing the total cysts containing nurse cells per ovary for each *W. pipientis* infected line assayed on 2-3 day old females. All *W. pipientis* variants are associated with a significant increase in nurse cell positive cysts per ovary (bootstrap 95% confidence interval, effect size). *W. pipientis* variants in the *w*MelCS-like clade have the highest effect on nurse cell positive cysts. (C-E) Swarm and Gardner-Altman plots showing pairwise comparisons of nurse cell positive cyst counts pooled together for each *w*Mel clade. *w*MelCS-like variants exhibit higher effects on nurse cell positive cysts compared to *w*Mel2 and *w*Mel-like variants (95% confidence interval, effect size), and *w*Mel2 variants exhibit a higher effect on nurse cell positive cysts than *w*Mel-like (95% confidence interval, effect size).

Fig 7. Total progeny per female and mean difference of progeny per female for the w^{1118}; bam^{L255F}/bam^{L255F} genotype infected with four representative *W. pipientis* variants compared to the uninfected control. (A) Swarm and Cumming estimation plots showing the

effect of *Wolbachia* variants on bam^{L255F}/bam^{L255F} female fertility over days 1-6 of eclosion. We included uninfected bam^{+}/bam^{+} females as well to compare bam^{L255F}/bam^{L255F} fertility to bam^{+}/bam^{+} fertility. *W. pipientis* variants did not have differential effects on female bam^{L255F}/bam^{L255F} fertility during this time frame. The bam^{L255F}/bam^{L255F} genotype regardless of *W. pipientis* infection showed a wider range of progeny compared to bam^{+}/bam^{+} females, and uninfected bam^{+}/bam^{+} mean fertility was significantly lower than uninfected bam^{L255F}/bam^{L255F} mean fertility (95% confidence interval, effect size). (B) Swarm and Cumming estimation plots showing the effect of *W. pipientis* variants on bam^{L255F}/bam^{L255F} female fertility over days 1-13 of eclosion. *W. pipientis* variants had differential effects on female bam^{L255F}/bam^{L255F} fertility. No variants had a negative effect on fertility. *Wolbachia* variants wMel2a_63, wMelCS_a_66 showed significant positive effects on fertility. The bam^{L255F}/bam^{L255F} genotype regardless of *W. pipientis* infection showed a wider range of progeny compared to bam^{+}/bam^{+} females, but uninfected bam^{+}/bam^{+} and uninfected bam^{L255F}/bam^{L255F} mean fertility was not significantly different.

Fig S1. Total eggs per female counted over 3 days for the w^{1118}; bam^{+}/bam^{+} genotype and the w^{1118}; bam^{L255F}/bam^{null} genotype infected with representative *W. pipientis* variants from the *w*Mel-like and *w*MelCS-like clades. (A) Swarm and Cumming estimation plots showing the total eggs per female for w^{1118}; bam^{+}/bam^{+} lines infected with *w*Mel59 or *w*MelCSa66. Infection with either variant does not significantly affect total eggs per female. (B) Swarm and Cumming estimation plots showing the total eggs per female for w^{1118}; bam^{L255F}/bam^{null} females infected with the same two *W. pipientis* variants. Infection with either *w*Mel_59 or *w*MelCSa_66 significantly rescues the number of eggs laid per female compared to the uninfected control (95% confidence interval, effect size). Consistent with the results of the nurse cell assay, *w*MelCSa_66 shows a higher rescue effect than *w*Mel_59.

A.

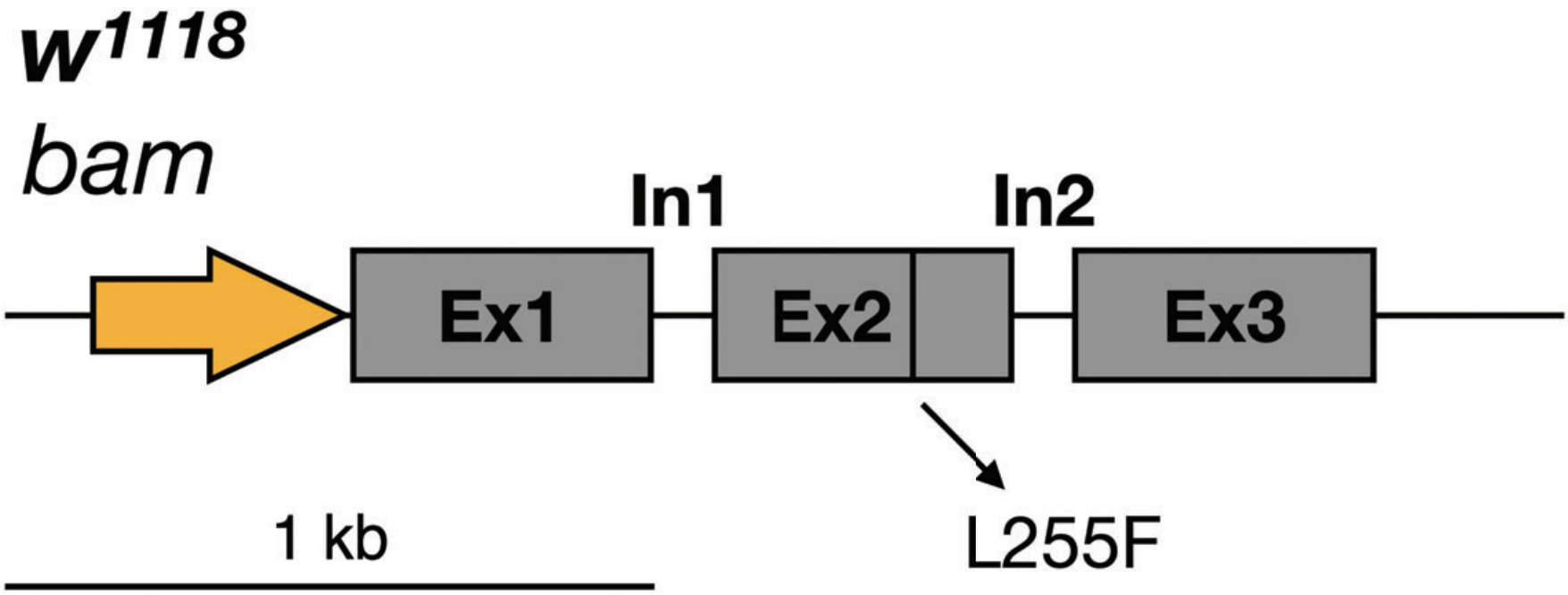
w1118
bam
In1
In2
Ex1
Ex2
Ex3
1 kb
L255F

B.

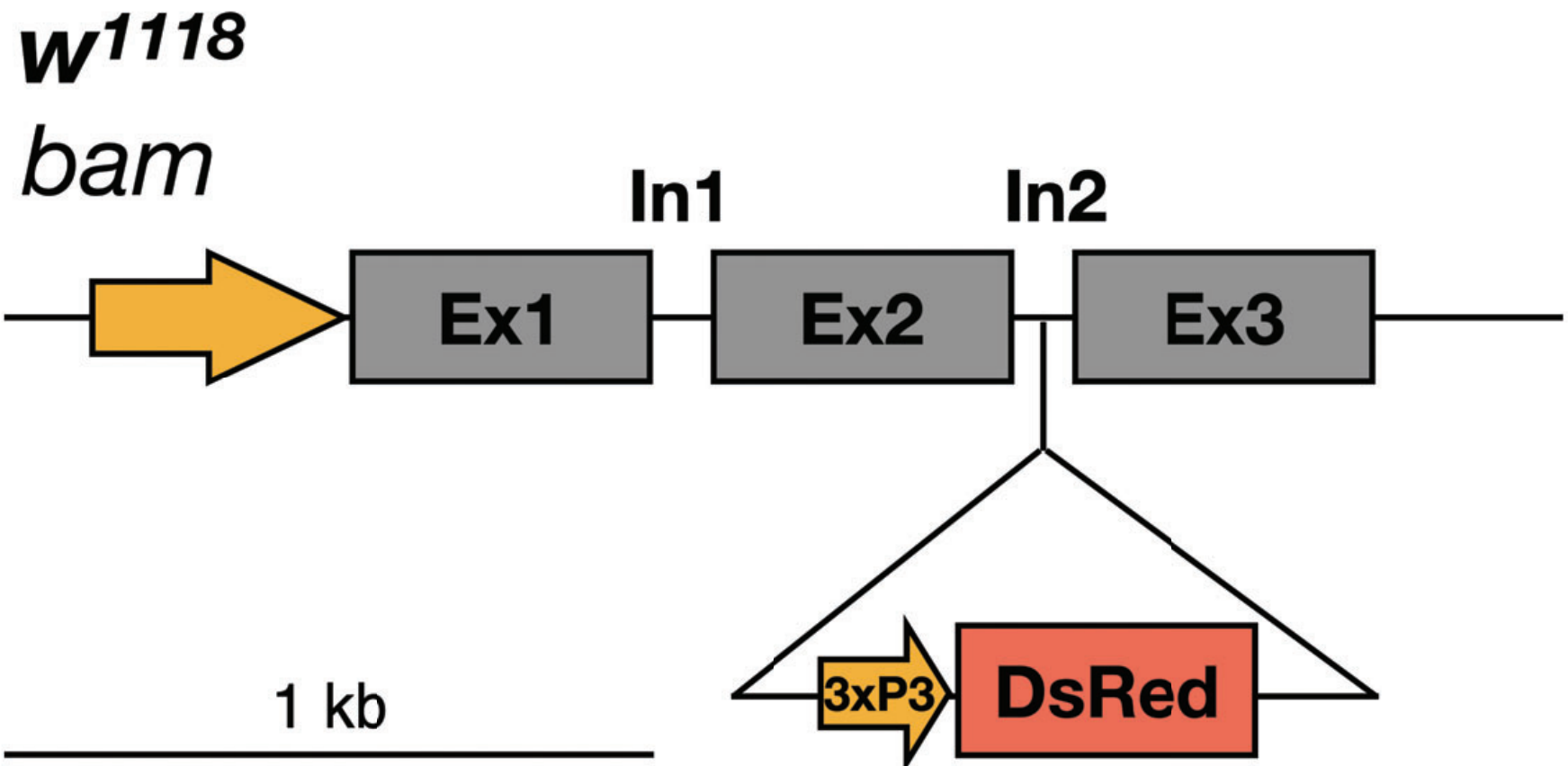
w1118
bam
In1
In2
Ex1
Ex2
Ex3
3xP3
DsRed
1 kb

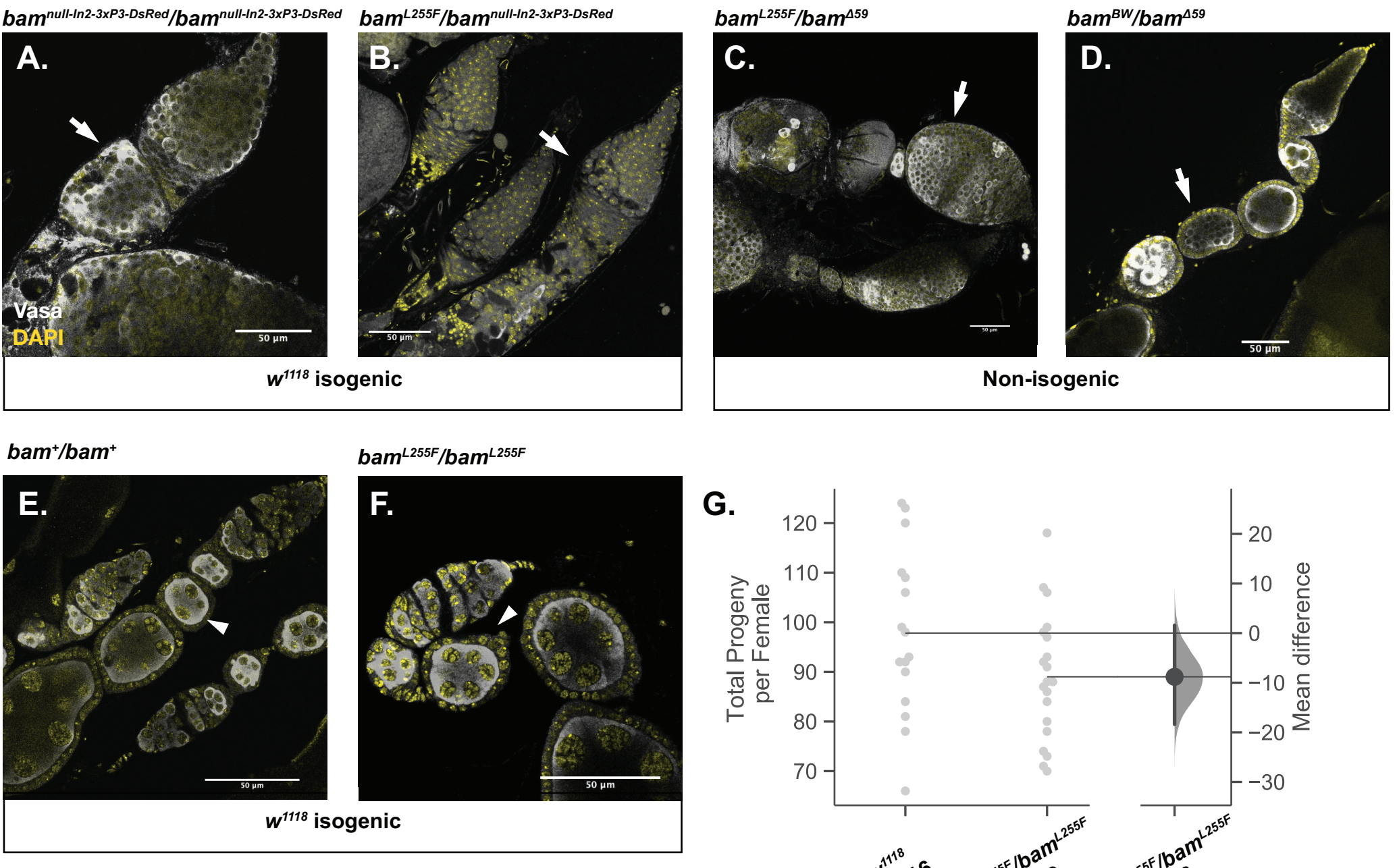
bam^null-In2-3xP3-DsRed/bam^null-In2-3xP3-DsRed
bam^L255F/bam^null-In2-3xP3-DsRed
bam^L255F/bam^Δ59
bam^BW/bam^Δ59
A.
B.
C.
D.
Vasa
DAPI
50 µm
w^1118 isogenic
Non-isogenic
bam+/bam+
bam^L255F/bam^L255F
E.
F.
w^1118 isogenic
G.
Total Progeny per Female
Mean difference
120
110
100
90
80
70
20
10
0
−10
−20
−30
w^1118 N=16
bam^L255F/bam^L255F N=20
bam^L255F/bam^L255F minus w^1118

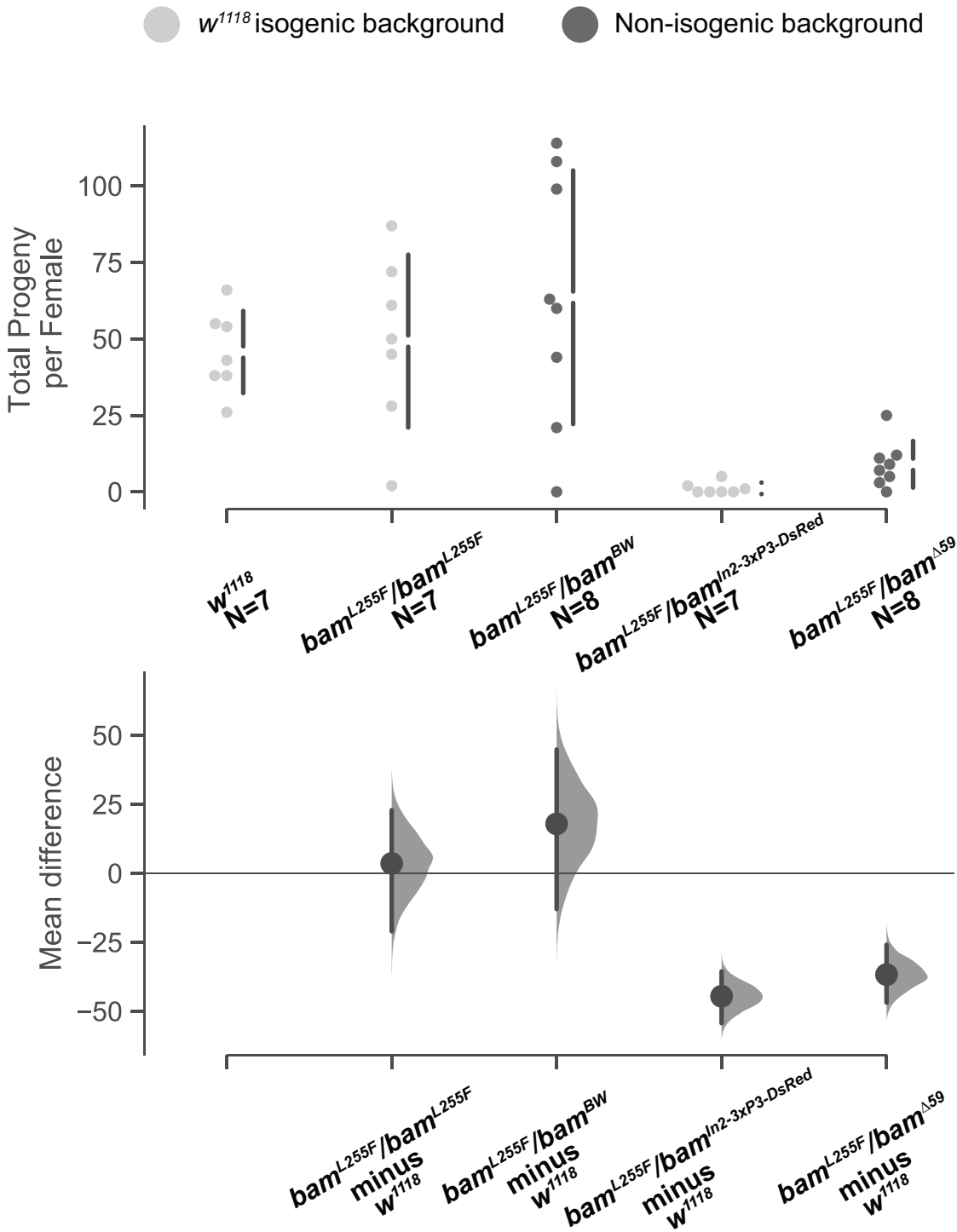
w1118 isogenic background
Non-isogenic background
Total Progeny per Female
100
75
50
25
0
w1118 N=7
bamL255F/bamL255F N=7
bamL255F/bamBW N=8
bamL255F/bamIn2-3xP3-DsRed N=7
bamL255F/bamΔ59 N=8
Mean difference
50
25
0
−25
−50
bamL255F/bamL255F minus w1118
bamL255F/bamBW minus w1118
bamL255F/bamIn2-3xP3-DsRed minus w1118
bamL255F/bamΔ59 minus w1118

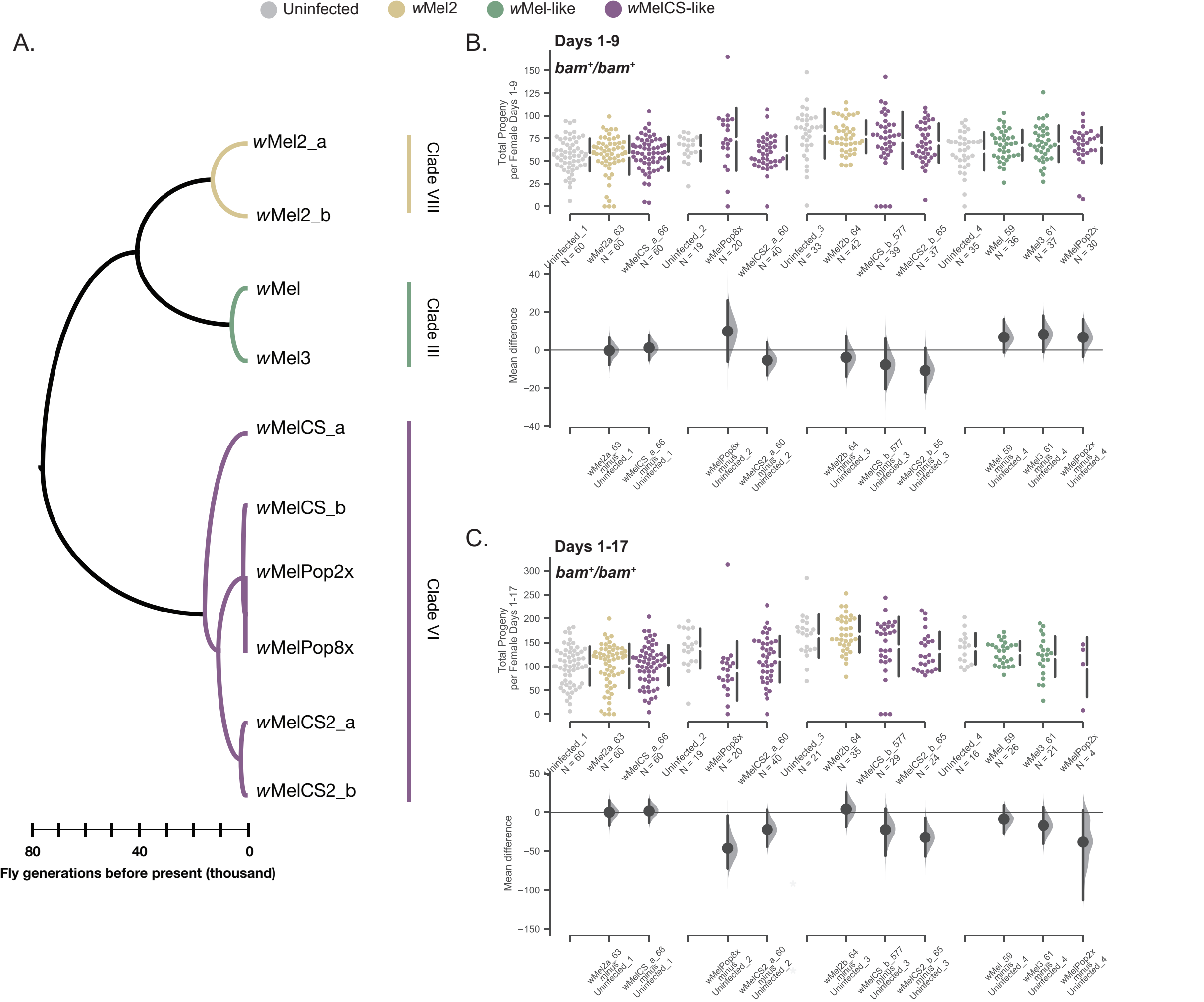
Uninfected
wMel2
wMel-like
wMelCS-like
A.
wMel2_a
wMel2_b
wMel
wMel3
wMelCS_a
wMelCS_b
wMelPop2x
wMelPop8x
wMelCS2_a
wMelCS2_b
Clade VIII
Clade III
Clade VI
80
40
0
Fly generations before present (thousand)
B.
Days 1-9
bam+/bam+
Total Progeny per Female Days 1-9
Mean difference
Uninfected_1 N = 60
wMel2a_63 N = 60
wMelCS_a_66 N = 60
Uninfected_2 N = 19
wMelPop8x N = 20
wMelCS2_a_60 N = 40
Uninfected_3 N = 33
wMel2b_64 N = 42
wMelCS_b_577 N = 39
wMelCS2_b_65 N = 37
Uninfected_4 N = 35
wMel_59 N = 36
wMel3_61 N = 37
wMelPop2x N = 30
C.
Days 1-17
bam+/bam+
Total Progeny per Female Days 1-17
Mean difference
Uninfected_1 N = 60
wMel2a_63 N = 60
wMelCS_a_66 N = 60
Uninfected_2 N = 19
wMelPop8x N = 20
wMelCS2_a_60 N = 40
Uninfected_3 N = 21
wMel2b_64 N = 35
wMelCS_b_577 N = 29
wMelCS2_b_65 N = 24
Uninfected_4 N = 16
wMel_59 N = 26
wMel3_61 N = 21
wMelPop2x N = 4

A.

Uninfected | *w*Mel2 | *w*Mel-like | *w*MelCS-like

Days 1-9

***bam*^{L255F}/*bam*^{null}**

Total Progeny per Female Days 1-9

Uninfected_1 N = 69
wMel2a_63 N = 60
wMelCS_a_66 N = 60
Uninfected_2 N = 11
wMelPop8x N = 27
wMelCS2_a_60 N = 33
Uninfected_3 N = 31
wMel2b_64 N = 39
wMelCS_b_577 N = 36
wMelCS2_b_65 N = 38
Uninfected_4 N = 29
wMel_59 N = 27
wMel3_61 N = 38
wMelPop2x N = 23

Mean difference

wMel2a_63 minus Uninfected_1
wMelCS_a_66 minus Uninfected_1
wMelPop8x minus Uninfected_2
wMelCS2_a_60 minus Uninfected_2
wMel2b_64 minus Uninfected_3
wMelCS_b_577 minus Uninfected_3
wMelCS2_b_65 minus Uninfected_3
wMel_59 minus Uninfected_4
wMel3_61 minus Uninfected_4
wMelPop2x minus Uninfected_4

B.

Days 1-17

***bam*^{L255F}/*bam*^{null}**

Total Progeny per Female Days 1-17

Uninfected_1 N = 69
wMel2a_63 N = 60
wMelCS_a_66 N = 60
Uninfected_2 N = 11
wMelPop8x N = 27
wMelCS2_a_60 N = 33
Uninfected_3 N = 30
wMel2b_64 N = 33
wMelCS_b_577 N = 33
wMelCS2_b_65 N = 35
Uninfected_4 N = 23
wMel_59 N = 24
wMel3_61 N = 32

Mean difference

wMel2a_63 minus Uninfected_1
wMelCS_a_66 minus Uninfected_1
wMelPop8x minus Uninfected_2
wMelCS2_a_60 minus Uninfected_2
wMel2b_64 minus Uninfected_3
wMelCS_b_577 minus Uninfected_3
wMelCS2_b_65 minus Uninfected_3
wMel_59 minus Uninfected_4
wMel3_61 minus Uninfected_4

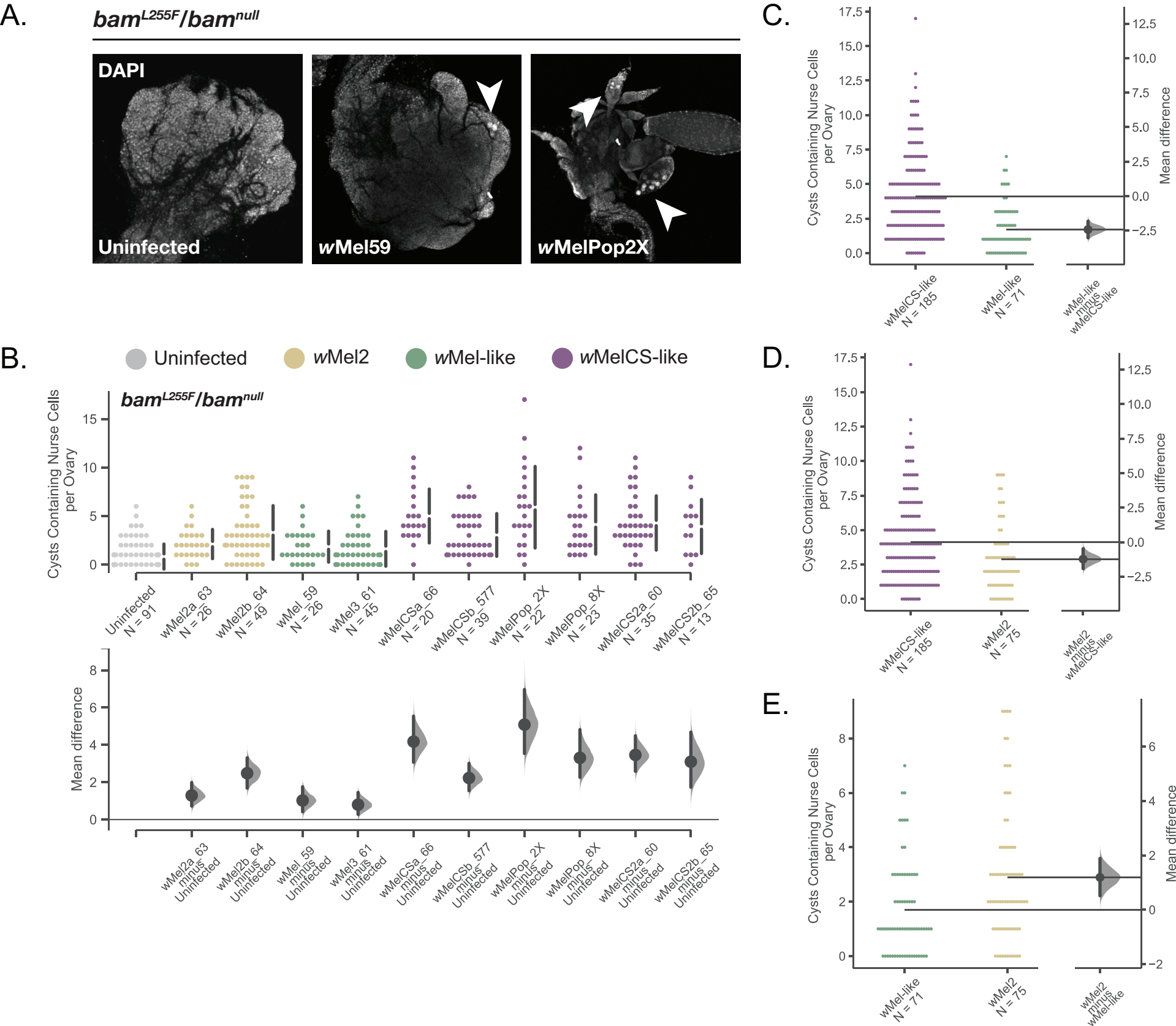
A.
bam^L255F/bam^null
DAPI
Uninfected
wMel59
wMelPop2X
B.
Uninfected
wMel2
wMel-like
wMelCS-like
bam^L255F/bam^null
Cysts Containing Nurse Cells per Ovary
Uninfected N = 91
wMel2a_63 N = 26
wMel2b_64 N = 49
wMel_59 N = 26
wMel3_61 N = 45
wMelCSa_66 N = 20
wMelCSb_577 N = 39
wMelPop_2X N = 22
wMelPop_8X N = 23
wMelCS2a_60 N = 35
wMelCS2b_65 N = 13
Mean difference
wMel2a_63 minus Uninfected
wMel2b_64 minus Uninfected
wMel_59 minus Uninfected
wMel3_61 minus Uninfected
wMelCSa_66 minus Uninfected
wMelCSb_577 minus Uninfected
wMelPop_2X minus Uninfected
wMelPop_8X minus Uninfected
wMelCS2a_60 minus Uninfected
wMelCS2b_65 minus Uninfected
C.
Cysts Containing Nurse Cells per Ovary
Mean difference
wMelCS-like N = 185
wMel-like N = 71
wMel-like minus wMelCS-like
D.
Cysts Containing Nurse Cells per Ovary
Mean difference
wMelCS-like N = 185
wMel2 N = 75
wMel2 minus wMelCS-like
E.
Cysts Containing Nurse Cells per Ovary
Mean difference
wMel-like N = 71
wMel2 N = 75
wMel2 minus wMel-like

A.

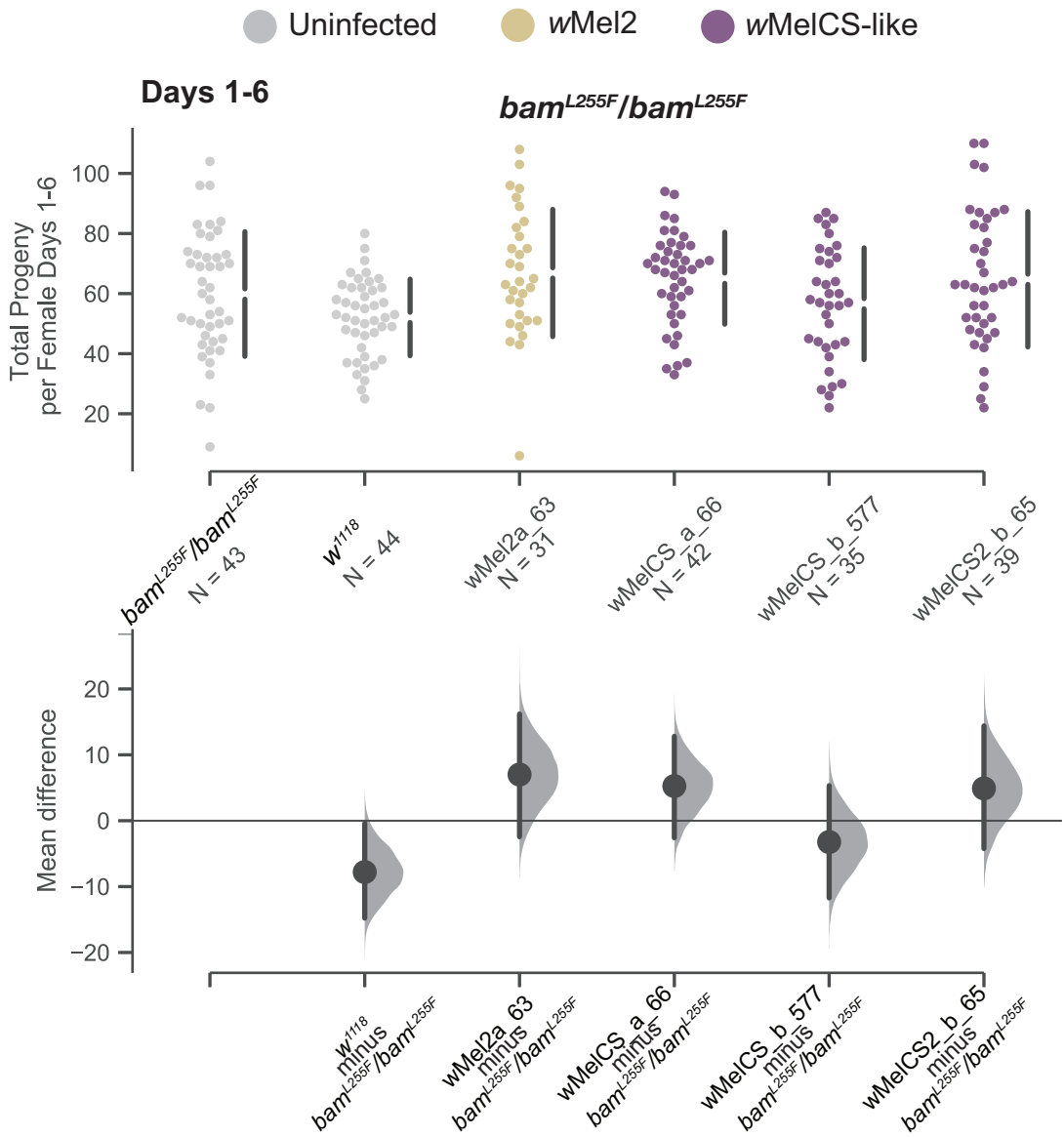
Uninfected
wMel2
wMelCS-like
Days 1-6
bamL255F/bamL255F
Total Progeny per Female Days 1-6
100
80
60
40
20
bamL255F/bamL255F N = 43
w1118 N = 44
wMel2a_63 N = 31
wMelCS_a_66 N = 42
wMelCS_b_577 N = 35
wMelCS2_b_65 N = 39
Mean difference
20
10
0
−10
−20
w1118 minus bamL255F/bamL255F
wMel2a_63 minus bamL255F/bamL255F
wMelCS_a_66 minus bamL255F/bamL255F
wMelCS_b_577 minus bamL255F/bamL255F
wMelCS2_b_65 minus bamL255F/bamL255F

B.

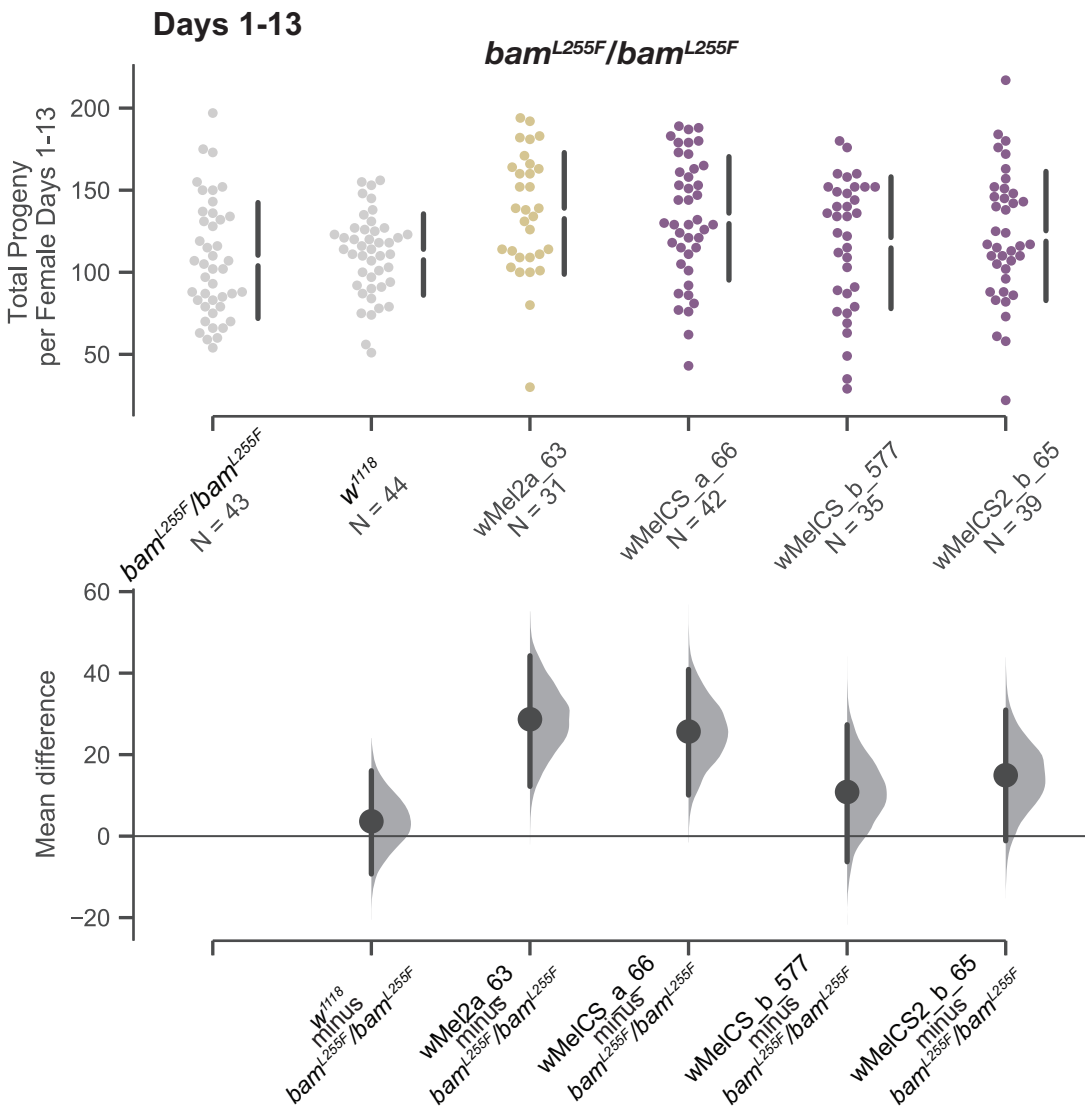
Days 1-13
bamL255F/bamL255F
Total Progeny per Female Days 1-13
200
150
100
50
bamL255F/bamL255F N = 43
w1118 N = 44
wMel2a_63 N = 31
wMelCS_a_66 N = 42
wMelCS_b_577 N = 35
wMelCS2_b_65 N = 39
Mean difference
60
40
20
0
−20
w1118 minus bamL255F/bamL255F
wMel2a_63 minus bamL255F/bamL255F
wMelCS_a_66 minus bamL255F/bamL255F
wMelCS_b_577 minus bamL255F/bamL255F
wMelCS2_b_65 minus bamL255F/bamL255F

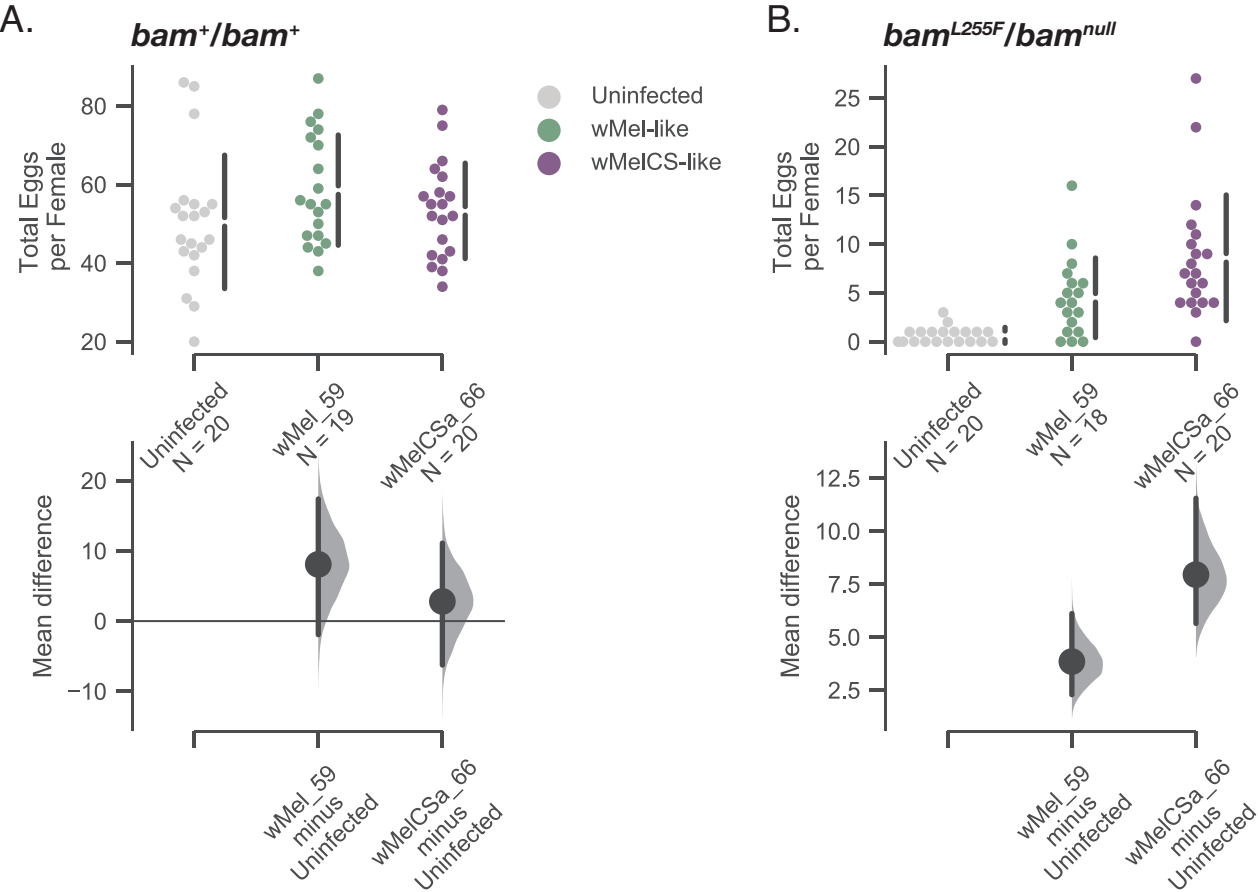
A.
bam+/bam+
Total Eggs per Female
80
60
40
20
Uninfected
wMel-like
wMelCS-like
Uninfected N = 20
wMel_59 N = 19
wMelCSa_66 N = 20
Mean difference
20
10
0
−10
wMel_59 minus Uninfected
wMelCSa_66 minus Uninfected
B.
bamL255F/bamnull
Total Eggs per Female
25
20
15
10
5
0
Uninfected N = 20
wMel_59 N = 18
wMelCSa_66 N = 20
Mean difference
12.5
10.0
7.5
5.0
2.5
wMel_59 minus Uninfected
wMelCSa_66 minus Uninfected