Hierarchy-guided Neural Networks for Species Classification

Mohannad Elhamod,[1,*] Kelly M. Diamond,[2] A. Murat Maga,[2,3] Yasin Bakis,[4] Henry L. Bart Jr.,[4] Paula Mabee,[5] Wasila Dahdul,[6] Jeremy Leipzig,[7] Jane Greenberg,[7] Brian Avants[8] and Anuj Karpatne[1]

[1]Virginia Tech, Blacksburg, 24060, VA, USA, [2]Seattle Children's Research Institute, Seattle, 98199, WA, USA, [3]University of Washington, Seattle, 98115, WA, USA, [4]Tulane University, New Orleans, 70118, LA, USA, [5]National Ecological Observatory Network, Battelle, Boulder, 80304, CO, USA, [6]University of California, Irvine, Irvine, 92623, CA, USA, [7]Drexel University, Philadelphia, 1910, PA, USA and [8]University of Virginia, Charlottesville, 22904, VA, USA

*Corresponding author. elhamod@vt.edu

Abstract

1. Fish species classification is an important task that is the foundation of many industrial, commercial, ecological, and scientific applications involving the study of fish distributions, dynamics, and evolution.
2. While conventional approaches for this task use off-the-shelf machine learning (ML) methods such as existing Convolutional Neural Network (ConvNet) architectures, there is an opportunity to inform the ConvNet architecture using our knowledge of biological hierarchies among taxonomic classes.
3. In this work, we propose infusing phylogenetic information into the model's training to guide its structure and relationships among the extracted features. In our extensive experimental analyses, the proposed model, named Hierarchy-Guided Neural Network (HGNN), outperforms conventional ConvNet models in terms of classification accuracy under scarce training data conditions.
4. We also observe that HGNN shows better resilience to adversarial occlusions, when some of the most informative patch regions of the image are intentionally blocked and their effect on classification accuracy is studied.

Key words: fish, machine learning, phylogeny, species classification

Introduction

A tree or phylogeny, depicting the branching pattern of taxa, represents a hypothesis of evolutionary relationships based on shared similarities, i.e., similarities that are derived from common ancestry (Hennig, 1966). From conservation to zoology, phylogenetic relationships are critical for interpreting study results and implications in the biological sciences. One area, however, where this information has yet to be fully incorporated is that of machine learning and image classification. Deep neural networks have found immense success in image classification problems with state-of-the-art ConvNet models (e.g., GoogleNet (Szegedy et al., 2015), AlexNet (Krizhevsky et al., 2012), and VGGNet (Simonyan and Zisserman, 2014)) reaching unprecedented performance on large-scale benchmark datasets such as ImageNet (Deng et al., 2009), CIFAR (Krizhevsky, 2009), COCO (Lin et al., 2014), and MNIST (LeCun and Cortes, 2010). By design, deep neural networks function similarly to phylogenetic analyses by extracting a hierarchy of simpler to more complex forms of abstraction in hidden layers—simpler features at lower depths (e.g., edges and texture) are non-linearly composed to form complex features at higher depths (e.g., eyes and fins). This has motivated several recent architectural innovations in deep learning such as ResNet (He et al., 2016), ResNeXt (Xie et al., 2017), and DenseNet (Huang et al., 2017), that have enabled the learning of deep and complex hierarchy of hidden features. However, the innate hierarchy extracted by neural networks from data is not necessarily tied to known evolutionary relationships in real-world applications. In this work, we explore the question: *Is it possible to make use of known phylogenetic classes to inform the learning of features, and can it lead to better generalization and robustness?*

Image classification in real-world biological problems such as species classification is fraught with several challenges that limit the usefulness of state-of-the-art deep learning methods trained on benchmark datasets. First, real-world images of specimens suffer from various data quality issues such as damaged specimens and occlusions of key morphological features while capturing snapshots (Fox and Hartman, 2019), which can crucially impact classification performance. Figure 1 shows some relevant examples. Second, real-world datasets for classification are limited in their scale in comparison to benchmark datasets, with limited representative power in terms of number of species (Rathi et al., 2018; Ogunlana et al., 2015; Costa et al., 2013; Larsen et al., 2009; Lee et al., 2008; Allken et al., 2019; Rauf et al., 2019; Ding et al., 2017), or number of images per species (Rodrigues et al., 2010; Lee et al., 2003). Third, the hierarchy of features extracted by conventional deep learning frameworks, while useful for prediction, do not conform to known biological hierarchies and hence do not directly translate to advancing scientific knowledge, which is often a more important goal than improving predictive performance for a scientist (Karpatne et al., 2017). In this study we focus on the problem of classifying the species of a fish specimen given a 2D image. We selected fishes for our study because they are a highly diverse, well-studied, and an ancient group of animals that comprise almost half of all vertebrate species (Helfman et al., 2009). Further, the phylogenetic relationships of fishes are well-studied (Betancur-R et al., 2017), and the taxonomic classification of fishes is well aligned with phylogeny.

Early work on automated fish classification used basic computer vision and image processing techniques to extract shape features such as landmarks and measurements from images and used tools such as decision trees, discriminant function analysis, and support vector machines to classify species based on these features (Lee et al., 2003, 2008; Larsen et al., 2009; Ogunlana et al., 2015). Others have applied scale-invariant feature transform (SIFT) and principal component analysis (PCA), and then used nearest

Fig. 1: Fish images from museum collections, demonstrating the challenges of curating fish image datasets.

neighbor search for classification (Rodrigues et al., 2010). Only recently has the use of raw image features in its intrinsic high-dimensionality become more feasible, likely because of advances in computational capabilities. For example, (Hasija et al., 2017) employed graph-embedding discriminant analysis, which reduces the image set matching problem to a point-to-point classification problem.

Advances in computing power have also enabled researchers to use more flexible and powerful classification methods such as ConvNets, especially designed to work with high-dimensional images. The basic idea of a ConvNet is to learn convolutional kernels (or filters) of a fixed size at every layer, that are applied to every pixel of the input image to generate multiple channels of image outputs for the next layer, followed by a final max-pooling layer to return class labels (Goodfellow et al., 2016). The number of convolutional channels at every layer is referred to as the width of the ConvNet, while the number of layers is termed as its depth. In previous work on fish classification (Sarigul, 2017; Ding et al., 2017), the use of ConvNets of different depths and widths has been investigated where it was found that shallower and wider networks usually perform better at classifying fish images. To further boost ConvNet's performance, (Rathi et al., 2018) pre-processed the fish images by means of Gaussian blurring, erosion and dilation, and Otsu thresholding (Otsu, 1979).

More recently, researchers have taken advantage of state-of-the-art architectures available in the field of deep learning for biological classification. For example, in a work by (Rauf et al., 2019), the technique of *transfer learning* was explored for fish classification, where neural network models *pre-trained* over large and diverse benchmark datasets were used as building blocks and then *fine-tuned* on the fish images. Transfer learning eliminates much of the arduous task of hyper-parameter fine-tuning otherwise required in the field of deep learning, and allows researchers to build on top of well-tested benchmark neural network models. It also saves model development time and boosts classification performance, especially when the available task-specific training sets are small (Yosinski et al., 2014). This technique has already been successfully applied in other prior works on fish classification (Siddiqui et al., 2018; Allken et al., 2019).

Our current method aims to improve neural network models for fish classification using known taxonomic relationships in our training dataset. Specifically, we present a novel deep learning architecture termed Hierarchy-Guided Neural Network (**HGNN**) that incorporates known hierarchy among classes (available as a two-level taxonomy: genus and species) to guide the learning of features at the hidden layers of the neural network. This work builds on a history of multi-label and hierarchical classification techniques using pre-built taxonomies (Silla and Freitas, 2011; Zhang and Zhou, 2013). Our proposed architecture shown in Figure 2 consists of two blocks (top and bottom rows) of ResNet models operating in parallel. We use the ResNet architecture in our work because

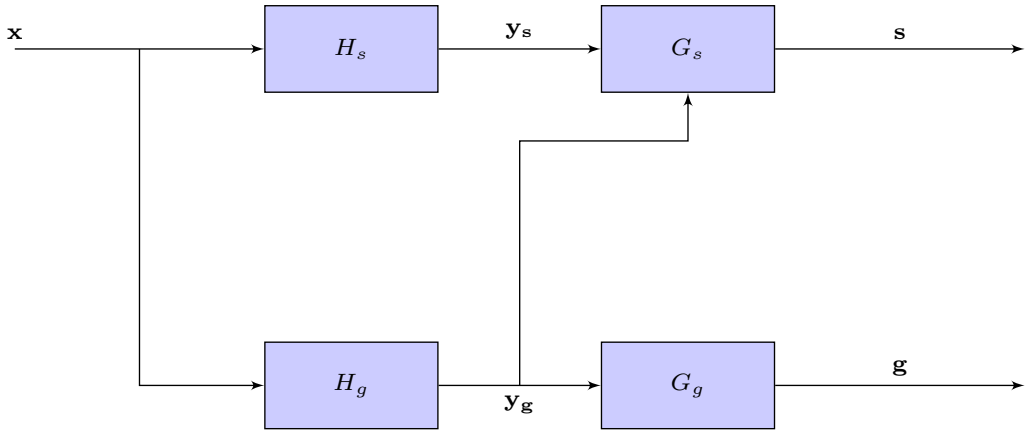

Fig. 2: Block diagram of **HGNN**. The top block of ResNets predicts the species ($\mathbf{s}$) of the input fish image ($\mathbf{x}$), while the bottom block of ResNets predicts the genus ($\mathbf{g}$). To leverage the relationship between genus and species classes for guiding the hidden features of our neural network, we harness the genus features learned at an intermediate depth ($\mathbf{y_g}$) of the genus block and aggregate them with the species features learned at the $\mathbf{y_s}$ level of the species block. The combination of both species and genus features are then used to make species class predictions.

it is currently among the best-performing ConvNet models for benchmark computer vision problems, although our proposed idea of **HGNN** is generic and can work with any deep learning architecture. In Figure 2, the top row of ResNet blocks predicts the species class $\mathbf{s}$ of the input fish image $\mathbf{x}$, while the bottom row predicts the genus class $\mathbf{g}$. These blocks learn a hierarchy of features (from simple to complex) at their hidden layers useful for the tasks of species and genus classification, respectively. While both these blocks can be viewed as learning separate features, we know that the genus features learned in the bottom block represents features at a higher level of abstraction that are directly useful for the task of species classification. Building upon this knowledge in our proposed **HGNN** framework, we harness the genus features learned at an intermediate depth H_g of the genus block, and aggregate them with the species features learned at the H_s depth of the species block. The combination of both species and genus features is then used for the task of species prediction.

We demonstrate the effectiveness of our proposed **HGNN** model in learning meaningful, diverse, and robust features at the hidden layers of the neural network leading to better generalization performance in the target application of fish species classification, even in the paucity of training data. We also empirically test the robustness of our model to synthetically generated image occlusions, where salient regions of the input images were intentionally occluded to adversely affect classification performance. We observe that by anchoring our learned features to the biologically known hierarchy among genus and species classes, our model is much more robust to occlusions as compared to a vanilla black-box model that predicts the species with no genus information (i.e. using only the top block of ResNets in Figure 2).

Materials and Methods

HGNN framework

We first present our proposed **HGNN** architecture that incorporates hierarchy among genus and species classes in neural network construction. We consider the problem of predicting the target species $\mathbf{s}$ given input image $\mathbf{x}$ using a composition of neural network layers. We are also given the genus level class $\mathbf{g}$ for every input $\mathbf{x}$.

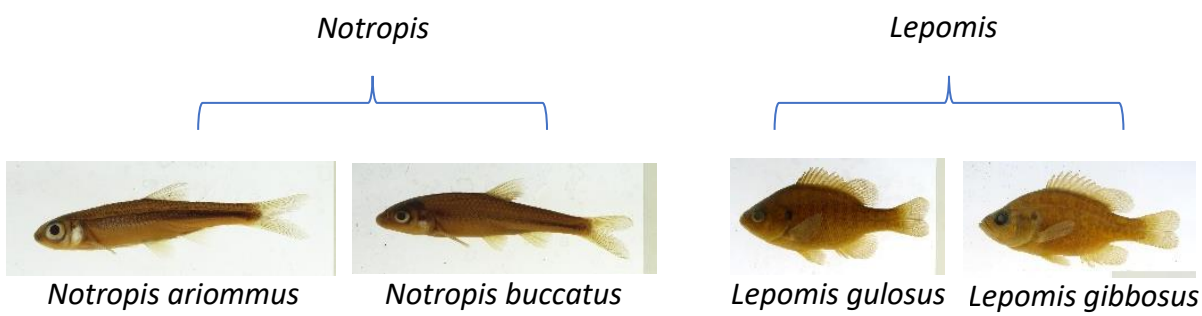

Fig. 3: Species that belong to the same genus exhibit features that are similar because of common ancestry.

We make two observations to motivate our proposed **HGNN** framework. First, we assume that the hierarchical taxonomy of genus and species classes captures a notion of similarity in terms of the discriminatory input features of every class. This is true, as illustrated in Figure 3, in the context of fish classification since species classes that belong to the same genus are more closely related phylogenetically than species classified in different genera. As a result, species that map to the same genus $\mathbf{g}$ should generally share similar features at the hidden layers of the neural network. Second, while the mapping from $\mathbf{s}$ to $\mathbf{g}$ is one-to-one, i.e., $\mathbf{g} = T(\mathbf{s})$, the inverse mapping of T from $\mathbf{s}$ to $\mathbf{g}$ is not unique. Hence, along with the shared features learned for every $\mathbf{g}$, we also need to learn unique features for every $\mathbf{s}$ to differentiate between species belonging to the same genus.

Building upon these two observations, we consider the following architectural composition of our neural network as shown in Figure 2. First, we use a functional block of layers H_g to extract hidden features at some intermediate depth of the neural network that are useful for predicting $\mathbf{g}$ as well as $\mathbf{s}$. These hidden features are passed to another functional block G_g that predicts $\mathbf{g}$. The complete chain of function compositions from $\mathbf{x}$ to $\mathbf{g}$ can be represented as $F_g(\mathbf{x})$, where $F_g = G_g \circ H_g$. Second, we learn another functional block H_s that extracts hidden features unique to every species. Finally, the features from H_s and H_g are added together and fed to another functional block of layers, G_s that predicts the target species $\mathbf{s}$. The composition of functions mapping $\mathbf{x}$ to $\mathbf{s}$ can thus be given by $f(\mathbf{x})$, where $F = G_s \circ (H_g + H_s)$.

To train the functional blocks in the complete **HGNN** architecture, we consider minimizing the following objective function:

$$\min_{H_s, H_g, G_s, G_g} \lambda_{\mathbf{s}} \; L_{\mathbf{s}}(\mathbf{s}, t_{\mathbf{s}}) + \lambda_{\mathbf{g}} \; L_{\mathbf{g}}(\mathbf{g}, t_{\mathbf{g}}) \tag{1}$$

where $L_{\mathbf{s}}$ and $L_{\mathbf{g}}$ are loss (or error) functions defined on the space of species labels and genus labels, respectively, on the training set. Specifically, these loss functions act as a measure of difference between the correct classification ($t_{\mathbf{s}}$ and $t_{\mathbf{g}}$), and the prediction ($\mathbf{s}$ and $\mathbf{g}$) on the training samples, respectively. We used the cross-entropy function as our preferred choice of loss function. Further, $\lambda_{\mathbf{s}}$ and $\lambda_{\mathbf{g}}$ are trade-off hyper-parameters balancing the relative importance of $L_{\mathbf{s}}$ and $L_{\mathbf{g}}$, respectively; their values are automatically assigned using the adaptive smoothing algorithm proposed in (Murugesan et al., 2016). Both the outputs of our neural network model, $\mathbf{s}$ and $\mathbf{g}$, are probability vectors whose entries range form 0 to 1 proportional to the model's credence about each species and genus class, respectively.

As mentioned before in section 1, our model is composed of two identical blocks of ResNets. The first ResNet block comprises of H_g and G_g, while H_s and G_s constitute the other. In our experiments, we found that the best point to extract the intermediate

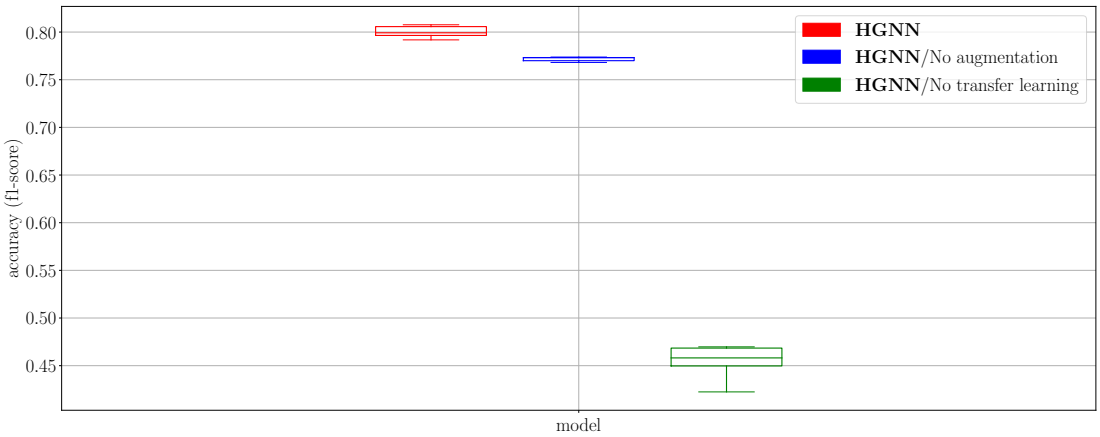

Fig. 4: Comparison among different models, showing the impact of data augmentation and transfer learning on the classification performance of **HGNN** models.

genus features (i.e. the point between H_g and G_g) is right before the final max-pooling layer. The same point in the other block of ResNets is used to combine the genus and species features. Instead of initializing our neural network parameters (or weights) with arbitrary values, we used pre-trained weights of ResNet trained on the ImageNet benchmark dataset as a good starting solution for our target problem of fish classification. Then, by optimizing the loss function in equation (1) on the fish training dataset of interest, we fine-tuned our network parameters to be more specialized for our target task. This technique, which is called transfer learning (Tan et al., 2018a), is widely adopted in the field of deep learning particularly in applications of computer vision, and has proven its effectiveness in scenarios with data paucity. In our preliminary experiments, as shown in Figure 4, we have found using this mode of transfer learning to increase the model's performance by about 35%.

Evaluation

Data Collection and Pre-processing

Our dataset comprises of images contributed by five museums that participated in the Great Lakes Invasives Network Project (GLIN). More information about this project can be found in the Data Availability section. This dataset, however, is highly imbalanced; some species have only a few images, while others have thousands. To alleviate this problem, and for computational feasibility, we created a number of subsets of the dataset for the purpose of training and evaluation. Specifically, we created two subsets that differ in terms of classification complexity (or difficulty). The first subset is called **Easy** and comes from a single museum. Therefore, its images are homogeneous in terms of lighting and camera conditions. The second is called **Hard** and its images are aggregated from across all museums, making it a larger, more diverse, and more complex dataset. Comparing results from these two datasets helps illustrate the effects of dataset complexity on classification performance. We further created two subsets of the **Easy** dataset by capping the number of images per species in the **Easy** dataset, 50 and 100. These different dataset sizes help illustrate how training data paucity impacts the model's classification performance. Henceforth, the suffix of the datset will refer to the number of images per species. For example, **Easy**/100 has 100 images per species. Table 1 gives a statistical summary of each dataset considered in this study.

Table 1. Statistics of the subsets of the GLIN dataset used in this study for training and evaluation.

Dataset	# of images	# of species	# of genera	# of images per species
GLIN (All)	63758	575	187	1 to 7935
Hard	4882	102	26	30 to 50
Easy/100	3762	38	11	63 to 100
Easy/50	1900	38	11	50

The acquired fish images typically contained a ruler, specimen label(s), and species tags along with the fish specimen. To retain only the fish region in the images, we trained a 2D Unet model (Goodfellow et al., 2016) using a small portion of our data in the ANTsRNet software (Tustison et al., 2018). We manually segmented the background, fish, scale bar, and field notes on 550 images using 3D Slicer (Kikinis et al., 2014). We used weights from the trained model to automatically mask and crop the fish specimen portion of the remainder images. With the exception of rare cases where the fish overlapped the scale bar and/or the field notes, which were discarded, this pipeline resulted in successful generation of RGB fish-only images at the original resolution. The pipeline was implemented in R using ANTsR (Avants, 2019) and ANTsRNet.

Once the cropped fish images were obtained, we performed data augmentation to enrich the dataset —we produced 50 different versions of each image by randomly applying standard image transformations used in deep learning for computer vision, including translations, flips, rotations, and intensity variations using PCA (Krizhevsky et al., 2012). Data augmentation is critical when using ConvNets for image processing, especially when the available data is limited (Shorten and Khoshgoftaar, 2019). By training the model on variations of the same image, the model is deterred from learning nuanced patterns in the images that can lead to spurious performance, such as the intensity of the background, and encouraged to be robust under variable input conditions. Our preliminary results, as shown in Figure 4, indicate that data augmentation boosted the model's accuracy by about 2.8%.

Evaluation Setup for Comparing Classification Performance

In the process of training black-box neural network architectures, it is common to observe higher generalization errors when the amount of training data is small. However, in **HGNN**, we show that by including a biological knowledge-guided loss term (see Equation 1) in the learning objective of neural networks, we can achieve reasonably good generalization performance even in situations where training data are scarce. This is in alignment with the observations made in a previous work by (Jia et al., 2019). To test for this hypothesis in the context of fish classification, we compared the classification performance of our proposed model to a baseline black-box neural network architecture (termed **Blackbox-NN**) comprising of a ResNet of the same size and shape as that of one of the blocks of our proposed model. Specifically, we compared the performance of **HGNN** and **Blackbox-NN** on each of the three data subsets mentioned in Table 1. For each of these subsets, we used 80% of the data for training, and used the remainder of the data for testing. To measure classification performance, we used the f1-score of the correct species class (Tan et al., 2018b) as our choice of evaluation metric. We also used box plots to show the model's performance over multiple random runs of neural network training. To obtain the best-performing neural network models, we performed some explorative Naïve-Bayes hyper-parameter search and fine-tuning. Then, we picked those parameters that performed best.

Tools for Deep Learning Visualization and Assessing Robustness to Adversarial Occlusions

Saliency maps (Simonyan et al., 2014) are heatmaps of the gradients of a neural network model's output with respect to its input. In other words, a saliency map shows how strongly do changes in pixel values of a certain region of the image cause a change in the

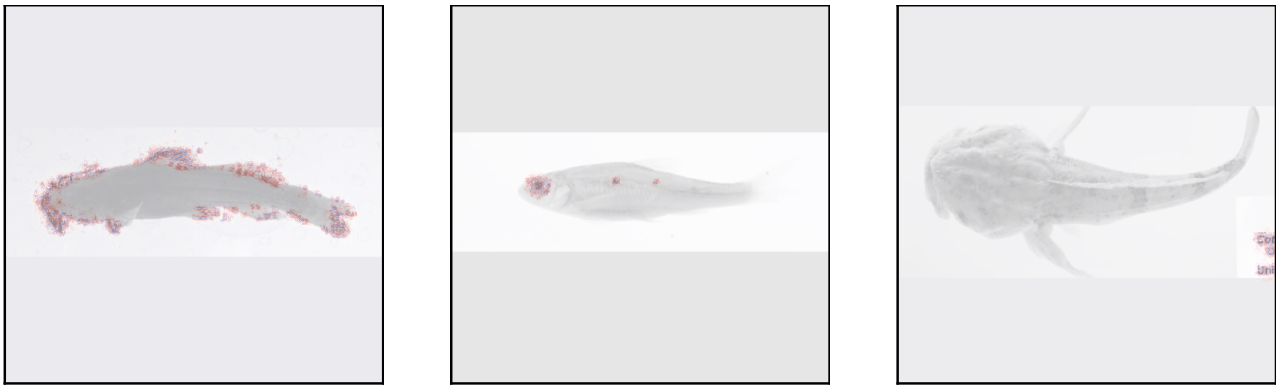

(a) Barbels and fins (b) Eye (c) Label paper

Fig. 5: Saliency maps of different fish images obtained for **Blackbox-NN**. Pixels in red denote image regions with high saliency scores, indicating higher importance of those regions for fish classification as perceived by the model.

species' probability, highlighting the areas of the image that are most decisive for the classification problem. Figure 5 shows some examples of saliency maps obtained for our model. The code we used for generating these saliency maps is inspired by FlashTorch (Ogura and Jain, 2020), an implementation tool based on Guided Back-propagation (Springenberg et al., 2015). As we can see in Figure 5, the baseline model is quite sensitive to different features of the input fish image for different species, including barbels and fins in Figure 5a and the eye in Figure 5b. Saliency maps are also a good debugging tool as they can reveal cases where the model is "cheating" or looking at irrelevant features of the image that are not biologically meaningful for the purpose of fish classification. An example of such a case is presented in Figure 5c, where the model is incorrectly picking up pixels around the note on the label paper in the image as regions with high saliency scores. In this way, saliency maps can be used for "interpreting" the learned features of neural network models.

Along with offering interpretability, saliency maps can also be used for investigating the resiliency (or robustness) of neural networks to adversarial occlusions. For example, by occluding regions (or patches) in the input image with high saliency scores, a neural network model's reliability at making correct predictions can be stress-tested even when it is starved off information from salient image regions. To measure the robustness of a model at every round of adversarial occlusions, we calculated the average probability of the correct class predicted by the model on an input image $\mathbf{x}$, averaged over all test images as $\mathbb{E}_{\mathbf{x}}(P_{t_s}(\mathbf{x}))$. The higher this metric, the less confused the model is about the input. Further, by measuring drops in this metric as a consequence of adversarial occlusions, we can evaluate if a model is too sensitive to selective regions of the input image (with the highest saliency score contributions), which when obstructed can confuse a model into making incorrect predictions. We make use of this metric to assess the robustness of **Blackbox-NN** and **HGNN** in our experiments.

Results and Discussion

Effect of Dataset Complexity and Training Size

Figure 6 shows a comparison between **HGNN** and **Blackbox-NN** on three subsets of the GLIN dataset: **Easy**/100, **Easy**/50, and **Hard**. Two observations can be made from this figure. First, as datasets become more complex (e.g., the **Hard** dataset) and/or subject to less training data (e.g., the **Easy**/50), the performance of the model deteriorates. Second, and more importantly, the

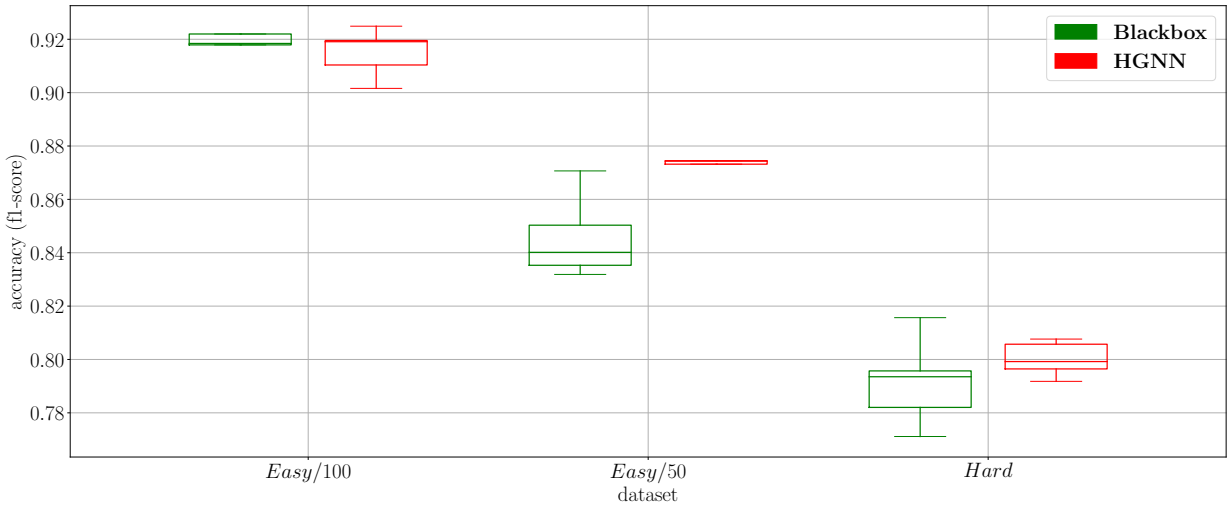

Fig. 6: Classification performance across different subsets of the GLIN dataset for **HGNN** and **Blackbox-NN**.

impact of our method is more pronounced exactly when data is scarce and the dataset is complex. As Figure 6 shows, while the median performance of **HGNN** is almost equal to that of **Blackbox-NN** for **Easy**/100, which is the easiest of the datasets, the former clearly outperforms the latter on both **Easy**/50 and **Hard**. This highlights our model's power and ability to compensate for the relative lack of data with respect to dataset complexity by incorporating biological knowledge.

Effect of Adversarial Occlusion

To demonstrate **HGNN**'s resiliency to adversarial occlusions, we iteratively cover regions (or patches) in an image with the highest saliency scores and report the probability of the correct class predicted by the model over the occluded image. Figure 7 shows an example of this process on an illustrative fish specimen from the **Easy**/50 dataset. From left to right, the figure shows a progression from an image with no occlusion towards applying more patches of adversarial occlusions (seen as blank square patches) on the same image. Below each image is the model's predicted probabilities over the 5 most probable species sorted in descending order, for both **HGNN** (top row) and **Blackbox-NN** (bottom row). We make a number of observations here. First, all of the saliency maps highlight the features of importance for classifying this fish, namely the eye, nostrils, and the dorsal fin. However, notice that the saliency maps for **HGNN** are slightly different from that of **Blackbox-NN**, demonstrating that the two models are not looking at the image in the exact same way. Second, even when there is no occlusion, while the **Blackbox-NN** makes the correct prediction, its probability of the correct species class is significantly lower than that of **HGNN**'s. Third, we notice how the baseline is unable to make the correct prediction after applying two patches of occlusions (in the middle column), while **HGNN** still does. This demonstrates **HGNN**'s ability to extract more useful and generalizable features from images for fish classification that are not overly nuanced to selective regions of the image. Finally, and most importantly, after applying four patches of occlusions (in rightmost column), we notice that while both models start predicting the wrong class, **HGNN** is still within the correct genus, while **Blackbox-NN** is not. It follows that the **Blackbox-NN** model is not learning phylogenetic features that could be used in other tasks, such as trait segmentation. To drive this point home, we automate this process for the entire dataset and compute the average predicted probability of the correct class across all images, as a function of the number of adversarial occlusions applied to the images. Table 2 reports the results for each number of patches ranging from 0 (no occlusion) to 4. We can see that **HGNN** shows

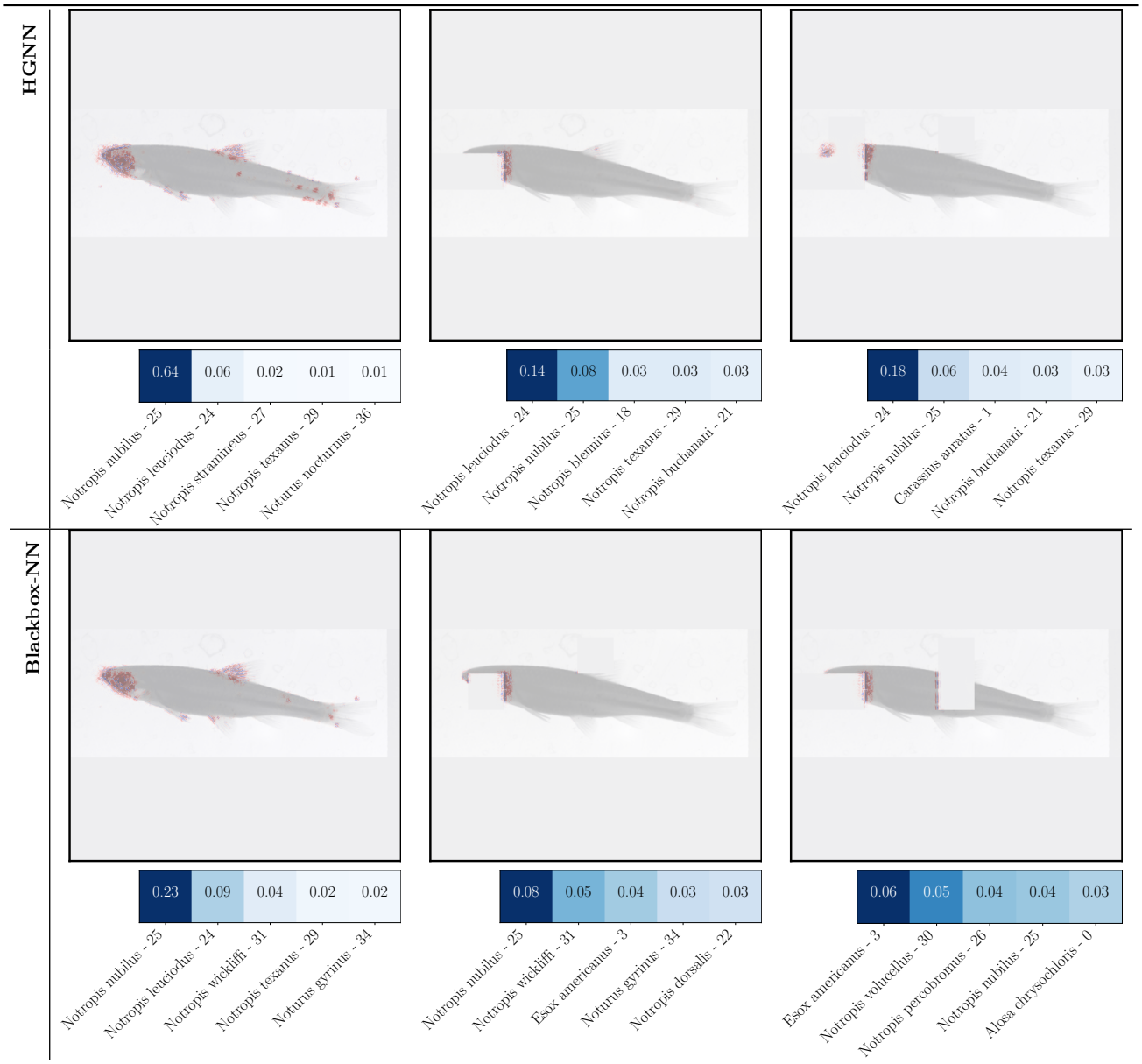

(a)

Fig. 7: Saliency maps showing the effect of adversarial occlusions (shown as blank square patches) on the predicted probabilities of the species class produced by **HGNN** (top row) and **Blackbox-NN** (bottom row) on an example fish image. The left-most column corresponds to the case with no occlusion, while the number of occlusions increase as we go from left column to the middle column (2 patches) to the right-most column (4 patches).

higher average probability of the correct class across all number of patches in comparison with **Blackbox-NN**. This demonstrates **HGNN**'s ability to generalize and handle image imperfections better, especially when the most informative (or salient) regions of the image are occluded.

Conclusion

In this paper, we have shown that embedding the hierarchical taxonomy of the genus and species classes in the design and learning of neural networks leads to solutions with better generalization, superior accuracy, and better resiliency to adversarial occlusions.

Table 2. Average probability of the correct species class predicted by **Blackbox-NN** and **HGNN** over **Easy**/50, as a function of the number of adversarial occlusions applied to every image. From left to right, we start with non-occluded images and progressively add more patches of occlusions.

Model	Number of Occlusion Patches				
	0	1	2	3	4
Blackbox-NN	0.473	0.355	0.291	0.232	0.187
HGNN	0.482	0.369	0.307	0.256	0.215

In future work, we plan to further exploit varying forms and amounts of hierarchical information such as other levels of taxonomic classes and phylogenetic tree-based distances between species to better understand the difference between black-box and biologically informed neural network features. This is especially important in biology, where feature validity and meaningfulness is paramount. Finally, we plan to investigate the use of such features in other computer vision tasks, such as image segmentation. Combined with phylogenetic metadata, such features can further boost both accuracy and resiliency.

Data Availability

For this work, and in an effort to create a diverse and statistically substantial dataset, we aggregated more than 60,000 images of fish specimens from five ichthyological research collections (Field Museum of Natural History `http://www.tubri.org/HDR/FMNH/`, Illinois Natural History Survey `http://www.tubri.org/HDR/INHS/`, J. F. Bell Museum of Natural History (`http://www.tubri.org/HDR/JFBM/`), Ohio State University Museum of Biological Diversity (`http://www.tubri.org/HDR/OSUM/`), and the University of Wisconsin-Madison Zoological Museum (`http://www.tubri.org/HDR/UWZM/`)) that participated in the Great Lakes Invasives Network Project (GLIN) [1]. The GLIN project is digitizing 1.73 million historical biological specimens representing 2,550 species, including fishes, clams, snails, mussels, algae and plants that are potentially invasive to the Great Lakes Region of the U.S. The computer code used for running our experiments is found at `https://github.com/elhamod/HGNN`.

Acknowledgment

This work is supported by the National Science Foundation through Harnessing the Data Revolution Ideas Lab program awards 1940322 (Bart); 1940233 (Greenberg); 2022042 (Mabee); 1940247 (Karpatne) and 1939505 (Maga), and also a startup allocation from the XSEDE (TG-DEB200005).

Authors' contribution

M.E designed the methodology from machine learning perspective and conducted and analysed the experiments. K.D, A.M.M and B.A pre-processed the data and helped design the experiments from phylogeny perspective. Y.B collected and labelled the data. H.B, P.M and W.D critiqued the methodology and provided suggestions to improve it. They also helped in selecting the set of species to work on and the general direction of research to explore. J.L and J.G helped setting up the pipeline for managing image metadata and creating workflows for model deployment. A.K provided overall supervision across all tasks conducted in this work. All authors contributed to writing the manuscript and gave final approval for publication.

[1] http://greatlakesinvasives.org/

Ethics

All images were collected from museum repositories and we did not use any live animals in this study. Authors declare no conflicts of interests.

References

Vaneeda Allken, Nils Olav Handegard, Shale Rosen, Tiffanie Schreyeck, Thomas Mahiout, and Ketil Malde. Fish species identification using a convolutional neural network trained on synthetic data. *ICES Journal of Marine Science*, 76(1):342–349, jan 2019. ISSN 1054-3139. doi: 10.1093/icesjms/fsy147.

Brian B Avants. *ANTsR: ANTs in R: Quantification Tools for Biomedical Images*, 2019. R package version 0.5.4.2.

Ricardo Betancur-R, Edward O Wiley, Gloria Arratia, Arturo Acero, Nicolas Bailly, Masaki Miya, Guillaume Lecointre, and Guillermo Orti. Phylogenetic classification of bony fishes. *BMC evolutionary biology*, 17(1):162, 2017.

C. Costa, F. Antonucci, C. Boglione, P. Menesatti, M. Vandeputte, and B. Chatain. Automated sorting for size, sex and skeletal anomalies of cultured seabass using external shape analysis. *Aquacultural Engineering*, 52:58–64, jan 2013. ISSN 01448609. doi: 10.1016/j.aquaeng.2012.09.001.

J. Deng, W. Dong, R. Socher, L.-J. Li, K. Li, and L. Fei-Fei. ImageNet: A Large-Scale Hierarchical Image Database. In *CVPR09*, 2009.

G. Ding, Y. Song, J. Guo, C. Feng, G. Li, B. He, and T. Yan. Fish recognition using convolutional neural network. In *OCEANS 2017 - Anchorage*, pages 1–4, 2017.

David Glynne Fox and Thomas PV Hartman. Photographing fluid-preserved specimens. In *Biobanking*, pages 149–153. Springer, 2019.

Ian Goodfellow, Yoshua Bengio, Aaron Courville, and Yoshua Bengio. *Deep learning*, volume 1. MIT press Cambridge, 2016.

Snigdhaa Hasija, Manas Jyoti Buragohain, and S. Indu. Fish species classification using graph embedding discriminant analysis. In *Proceedings - 2017 International Conference on Machine Vision and Information Technology, CMVIT 2017*, pages 81–86. Institute of Electrical and Electronics Engineers Inc., mar 2017. ISBN 9781509049936. doi: 10.1109/CMVIT.2017.23.

Kaiming He, Xiangyu Zhang, Shaoqing Ren, and Jian Sun. Deep residual learning for image recognition. *2016 IEEE Conference on Computer Vision and Pattern Recognition (CVPR)*, pages 770–778, 2016.

Gene Helfman, Bruce B Collette, Douglas E Facey, and Brian W Bowen. *The diversity of fishes: biology, evolution, and ecology*. John Wiley & Sons, 2009.

Willi Hennig. *Phylogenetic systematics*. 1966.

Gao Huang, Zhuang Liu, Laurens Van Der Maaten, and Kilian Q Weinberger. Densely connected convolutional networks. In *Proceedings of the IEEE conference on computer vision and pattern recognition*, pages 4700–4708, 2017.

Xiaowei Jia, Jared Willard, Anuj Karpatne, Jordan Read, Jacob Zwart, Michael Steinbach, and Vipin Kumar. *Physics Guided RNNs for Modeling Dynamical Systems: A Case Study in Simulating Lake Temperature Profiles*, pages 558–566. 05 2019. ISBN 978-1-61197-567-3. doi: 10.1137/1.9781611975673.63.

Anuj Karpatne, Gowtham Atluri, James H Faghmous, Michael Steinbach, Arindam Banerjee, Auroop Ganguly, Shashi Shekhar, Nagiza Samatova, and Vipin Kumar. Theory-guided data science: A new paradigm for scientific discovery from data. *IEEE Transactions on Knowledge and Data Engineering*, 29(10):2318–2331, 2017.

Ron Kikinis, Steve D. Pieper, and Kirby G. Vosburgh. 3D Slicer: A Platform for Subject-Specific Image Analysis, Visualization, and Clinical Support. In *Intraoperative Imaging and Image-Guided Therapy*, pages 277–289. Springer, New York, NY, 2014. ISBN 978-1-4614-7656-6 978-1-4614-7657-3. doi: 10.1007/978-1-4614-7657-3_19. URL `https://link.springer.com/chapter/10.1007/978-1-4614-7657-3_19`.

Alex Krizhevsky. Learning multiple layers of features from tiny images. Technical report, 2009.

Alex Krizhevsky, Ilya Sutskever, and Geoffrey E Hinton. Imagenet classification with deep convolutional neural networks. In F. Pereira, C. J. C. Burges, L. Bottou, and K. Q. Weinberger, editors, *Advances in Neural Information Processing Systems 25*, pages 1097–1105. Curran Associates, Inc., 2012. URL http://papers.nips.cc/paper/4824-imagenet-classification-with-deep-convolutional-neural-networks.pdf.

Rasmus Larsen, Hildur Olafsdottir, and Bjarne Kjær Ersbøll. Shape and texture based classification of fish species. In *Lecture Notes in Computer Science (including subseries Lecture Notes in Artificial Intelligence and Lecture Notes in Bioinformatics)*, volume 5575 LNCS, pages 745–749. Springer, Berlin, Heidelberg, 2009. ISBN 3642022294. doi: 10.1007/978-3-642-02230-2_76.

Yann LeCun and Corinna Cortes. MNIST handwritten digit database. 2010. URL http://yann.lecun.com/exdb/mnist/.

D. J. Lee, Sharon Redd, Robert Schoenberger, Xiaoqian Xu, and Pengcheng Zhan. An Automated Fish Species Classification and Migration Monitoring System. In *IECON Proceedings (Industrial Electronics Conference)*, volume 2, pages 1080–1085, 2003. doi: 10.1109/IECON.2003.1280195.

Dah Jye Lee, James K. Archibald, Robert B. Schoenberger, Aaron W. Dennis, and Dennis K. Shiozawa. Contour matching for fish species recognition and migration monitoring. *Studies in Computational Intelligence*, 122:183–207, 2008. ISSN 1860949X. doi: 10.1007/978-3-540-78534-7_8.

Tsung-Yi Lin, Michael Maire, Serge Belongie, Lubomir Bourdev, Ross Girshick, James Hays, Pietro Perona, Deva Ramanan, C. Lawrence Zitnick, and Piotr Dollár. Microsoft coco: Common objects in context, 2014. URL http://arxiv.org/abs/1405.0312. cite arxiv:1405.0312Comment: 1) updated annotation pipeline description and figures; 2) added new section describing datasets splits; 3) updated author list.

Keerthiram Murugesan, Hanxiao Liu, Jaime Carbonell, and Yiming Yang. Adaptive smoothed online multi-task learning. In D. Lee, M. Sugiyama, U. Luxburg, I. Guyon, and R. Garnett, editors, *Advances in Neural Information Processing Systems*, volume 29, pages 4296–4304. Curran Associates, Inc., 2016. URL https://proceedings.neurips.cc/paper/2016/file/a869ccbcbd9568808b8497e28275c7c8-Paper.pdf.

S O Ogunlana, O Olabode, S A A Oluwadare, and G B Iwasokun. Fish Classification Using Support Vector Machine. Technical Report 2, 2015. URL www.ajocict.net.

Misa Ogura and Ravi Jain. Flashtorch. http://doi.org/10.5281/zenodo.3596650, 2020.

Nobuyuki Otsu. A threshold selection method from gray-level histograms. *IEEE transactions on systems, man, and cybernetics*, 9(1): 62–66, 1979.

Dhruv Rathi, Sushant Jain, and S. Indu. Underwater Fish Species Classification using Convolutional Neural Network and Deep Learning. In *2017 9th International Conference on Advances in Pattern Recognition, ICAPR 2017*, pages 344–349. Institute of Electrical and Electronics Engineers Inc., dec 2018. ISBN 9781538622414. doi: 10.1109/ICAPR.2017.8593044.

Hafiz Tayyab Rauf, Muhammad Ikram Lali, Saliha Zahoor, Syed Zakir Shah, Abd Rehman, and Syed Ahmad Chan Bukhari. Visual features based automated identification of fish species using deep convolutional neural networks. *Computers and Electronics in Agriculture*, 11 2019. doi: 10.1016/j.compag.2019.105075.

Marco T.A. Rodrigues, Flávio L.C. Pádua, Rogério M. Gomes, and Gabriela E. Soares. Automatic fish species classification based on robust feature extraction techniques and artificial immune systems. In *Proceedings 2010 IEEE 5th International Conference on Bio-Inspired Computing: Theories and Applications, BIC-TA 2010*, pages 1518–1525, 2010. ISBN 9781424464388. doi: 10.1109/BICTA.2010.5645273.

Mehmet Sarigul. Comparison of different deep structures for fish classification. *International Journal of Computer Theory and Engineering*, 9, 10 2017. doi: 10.7763/IJCTE.2017.V9.1167.

Connor Shorten and Taghi M Khoshgoftaar. A survey on image data augmentation for deep learning. *Journal of Big Data*, 6(1):60, 2019.

Shoaib Ahmed Siddiqui, Ahmad Salman, Muhammad Imran Malik, Faisal Shafait, Ajmal Mian, Mark R Shortis, and Euan S Harvey. Automatic fish species classification in underwater videos: exploiting pre-trained deep neural network models to compensate for limited labelled data. *ICES Journal of Marine Science*, 75(1):374–389, jan 2018. ISSN 1054-3139. doi: 10.1093/icesjms/fsx109.

Carlos N Silla and Alex A Freitas. A survey of hierarchical classification across different application domains. *Data Mining and Knowledge Discovery*, 22(1-2):31–72, 2011.

Karen Simonyan and Andrew Zisserman. Very deep convolutional networks for large-scale image recognition. *arXiv preprint arXiv:1409.1556*, 2014.

Karen Simonyan, Andrea Vedaldi, and Andrew Zisserman. Deep inside convolutional networks: Visualising image classification models and saliency maps. *CoRR*, abs/1312.6034, 2014.

Jost Tobias Springenberg, Alexey Dosovitskiy, Thomas Brox, and Martin A. Riedmiller. Striving for simplicity: The all convolutional net. In Yoshua Bengio and Yann LeCun, editors, *3rd International Conference on Learning Representations, ICLR 2015, San Diego, CA, USA, May 7-9, 2015, Workshop Track Proceedings*, 2015. URL `http://arxiv.org/abs/1412.6806`.

C. Szegedy, Wei Liu, Yangqing Jia, P. Sermanet, S. Reed, D. Anguelov, D. Erhan, V. Vanhoucke, and A. Rabinovich. Going deeper with convolutions. In *2015 IEEE Conference on Computer Vision and Pattern Recognition (CVPR)*, pages 1–9, 2015.

Chuanqi Tan, Fuchun Sun, Tao Kong, Wenchang Zhang, Chao Yang, and Chunfang Liu. A survey on deep transfer learning. In *International conference on artificial neural networks*, pages 270–279. Springer, 2018a.

P.N. Tan, M. Steinbach, A. Karpatne, and V. Kumar. *Introduction to data mining (2nd edition)*. Pearson Addison Wesley Boston, 2018b.

Nicholas J. Tustison, Zixuan Lin, Xue Feng, Nicholas Cullen, Jaime F. Mata, Lucia Flors, James C. Gee, Talissa A. Altes, John P. Mugler III, and Kun Qing. Convolutional neural networks with template-based data augmentation for functional lung image quantification. *Academic Radiology*, 2018. URL `https://www.ncbi.nlm.nih.gov/pubmed/30195415`.

Saining Xie, Ross Girshick, Piotr Dollár, Zhuowen Tu, and Kaiming He. Aggregated residual transformations for deep neural networks. In *Proceedings of the IEEE conference on computer vision and pattern recognition*, pages 1492–1500, 2017.

Jason Yosinski, Jeff Clune, Yoshua Bengio, and Hod Lipson. How transferable are features in deep neural networks? In *Proceedings of the 27th International Conference on Neural Information Processing Systems - Volume 2*, NIPS'14, page 3320–3328, Cambridge, MA, USA, 2014. MIT Press.

Min-Ling Zhang and Zhi-Hua Zhou. A review on multi-label learning algorithms. *IEEE transactions on knowledge and data engineering*, 26(8):1819–1837, 2013.