Occurrence, functionality, and abundance of the *TERT* promoter mutations

Sivaramakrishna Rachakonda[1], Jörg D. Hoheisel[1], and Rajiv Kumar[1,2]*
[1]Division of Functional Genome Analysis, German Cancer Research Center (DKFZ), Heidelberg, Germany
[2]Department of Molecular Biology of Cancer, Institute of Experimental Medicine of the Czech Academy of Sciences, Videnska, Prague, Czech Republic

Keywords: Telomeres, telomerase, TERT promoter mutations, cancers

Abbreviations: ACD: Adrenocortical Dysplasia Protein Homolog (unofficial name TPP1); ARF: A-Raf Proto-Oncogene Serine/Threonine-Protein Kinase; ARID2: AT-Rich Interaction Domain 2; ATAC: Assay for Transposase-Accessible Chromatin; BRAF: B-Raf Proto-Oncogene, Serine/Threonine Kinase; CDKN2A: Cyclin-Dependent Kinase Inhibitor 2A; CRAF: C-Raf Proto-Oncogene, Serine/Threonine Kinase; CST: CTC1-STN1-TEN1 complex; CTNNB1: Catenin Beta 1; ENCODE: Encyclopedia of DNA Elements; ELF: E74 Like ETS Transcription Factor; ERK: Extracellular Signal-Regulated Kinase; ETS: E26 Transformation-specific; ETS1: ETS Proto-Oncogene 1, Transcription Factor; ETS2: ETS Proto-Oncogene 2, Transcription Factor; ETV5: ETS Variant Transcription Factor 5; GABPA: GA Binding Protein Transcription Factor Subunit Alpha; GABPB1: GA Binding Protein Transcription Factor Subunit Beta 1; hESC: Human Embryonic Stem Cells; IDH: Isocitrate Dehydrogenase; MAPK: Mitogen-Activated Protein Kinase; NF-kB: Nuclear Factor Kappa B Subunit; NRAS: Neuroblastoma RAS Viral Oncogene Homolog; POT1: Protection of Telomere; RAP1: Repressor/activator Protein 1; RTEL: Regulator of Telomere Elongation Helicase 1; TERC: Telomerase RNA Component; TERT: Telomerase Reverse Transcriptase; TIN2: TRF1 Interacting Nuclear Factor 2; TRAIL-R2: Tumor Necrosis Factor-related Apoptosis-inducing Ligand Receptor 2; TRF1: Telomeric Repeat Binding Factor 1; TRF2: Telomeric Repeat Binding Factor 2;

***Correspondence to:** Rajiv Kumar, Division of Functional Genome Analysis, German Cancer Research Center, Im Neuenheimer Feld 580, 69120 Heidelberg, Germany
Email: r.kumar@dkfz.de

Abstract

Telomere shortening at chromosomal ends due to the constraints of the DNA replication process acts as a tumor suppressor by restricting the replicative potential in primary cells. Cancers evade that limitation primarily through the reactivation of telomerase via different mechanisms. Mutations within the promoter of the telomerase reverse transcriptase (*TERT*) gene represent a definite mechanism for the ribonucleic enzyme regeneration predominantly in cancers that arise from tissues with low rates of self-renewal. The promoter mutations cause a moderate increase in *TERT* transcription and consequent telomerase upregulation to the levels sufficient to delay replicative senescence but not prevent bulk telomere shortening and genomic instability. Since the discovery, a staggering number of studies and publications have resolved the discrete aspects, effects, and clinical relevance of the *TERT* promoter mutations. The promoter mutations link transcription of *TERT* with oncogenic pathways, associate with markers of poor outcome, and define patients with reduced survivals in several cancers. In this review, we discuss the occurrence and impact of the promoter mutations and highlight the mechanism of *TERT* activation. We further deliberate on the foundational question of the abundance of the *TERT* promoter mutations and a general dearth of functional mutations within noncoding sequences, as evident from pan-cancer analysis of the whole-genomes. We posit that the favorable genomic constellation within the *TERT* promoter may be less than a common occurrence in other noncoding functional elements. The evolutionary constraints limit the functional fraction within the human genome, hence the lack of abundant mutations outside the coding sequences.

Introduction

Telomeres, which mask natural chromosomal ends from DNA damage repair machinery to maintain genomic integrity, comprise hexanucleotide repeats that range 10-15 kb in length[1, 2]. The mainly double-stranded telomere repeat sequences end in a single-stranded G-rich 150-200 nucleotide long 3' tail[3, 4]. Intrinsically unstable telomeres represent fragile sites stabilized by the shelterin complex components, DNA binding TRF1, TRF2, POT1, and adaptors TIN2, TPP1, and RAP1[5, 6]. Shelterin complex shields telomeres through mechanisms that differ significantly in pluripotent and somatic

tissues[2, 7-10]. Telomeres require a minimum number of tandem repeats for sufficient associated proteins to form a dynamic protective nucleoprotein structure to overcome the end-protection problem[3, 11, 12].

An intrinsic limitation of the DNA replication process manifests itself during the synthesis phase of a cell cycle due to unfilled gaps at the chromosomal 5'-terminals following the removal of RNA primers[5, 13]. Besides, the inability of the DNA Pol α-primase complex to initiate the replication from the very end of linear DNA on the lagging strands contributes to the loss of ~70-250 nucleotides per cell division, presaging the gradual telomere attrition[14, 15]. That process consequentially generates the G-rich single-strand overhangs with the length proportional to telomere shortening[16]. The single-stranded overhangs are critical for telomere protection through T-loop formation and elongation via telomerase recruitment that involves TRF2, 5'-3' exonuclease Apollo, and RTEL1 helicase[17-19]. The erosion of chromosomal ends through successive mitoses constraints the replicative potential of primary cells that tumors adapt to evade through telomere stabilization[20-23]. The age-dependent progressive attrition of chromosomal ends, accentuated through genetic defects or exogenous factors, causes telomere dysfunctions that drive the hallmarks of aging, which include cellular senescence, stem cell exhaustion, genomic instability, mitochondrial dysfunction, epigenetic dysregulation, loss of proteostasis, altered nutrition sensing, and inflammation[24-27]. Inherited mutations in genes that encode proteins involved in telomere structure, repair, replication, and preservation of equilibrium result in debilitating syndromes collectively termed telomeropathies[28, 29].

Telomere maintenance and stabilization entails a complex and controlled process involving several components functional in critical pathways[30]. The ribonucleic protein telomerase, comprised of intricately interlocked catalytic reverse transcriptase subunit (TERT) and an RNA component (TERC) along with auxiliary elements including histone H2-H2B dimer, counteracts telomere shortening to overcome the 'end replication problem' and maintain genomic integrity in pluripotent stem cells, early embryonic tissues, and cells that undergo divisions as a physiological requirement[1, 31-34]. With a

limited amount of both the enzyme and substrates, telomerase extends telomeres in the late S-phase through stringent mechanisms “where any perturbation becomes causal for different telomere related diseases, insufficiency leading to stem cell and tissue failure syndromes and too much to cancer predisposition”[35-41]. The recruitment and processivity of telomerase on telomeres are assisted by the shelterin components and terminated by the heterotrimeric CTC1-STN1-TEN1 (CST) complex, followed by a C-strand fill-in the engagement of DNA polymerase α-primase [37, 42-45]. Most human somatic tissues and adult stem cells do not express sufficient telomerase to maintain telomere length infinitely due to repression of *TERT* upon differentiation in a histone deacetylase-dependent manner and through alternative splicing of TERT expression[27, 46, 47]. Splicing out of exon 2 of *TERT* leads to mRNA decay in differentiated cells, and its retention promotes telomerase accumulation in pluripotent cells[47]. The age-dependent telomere attrition leading to induction of DNA damage response acts as a tumor suppressor mechanism through upregulation of checkpoint inhibitors[3, 48-50].

The unlimited replicative potential of tumor cells through stabilized telomeres constitutes one of the cancer hallmarks[15, 22, 51]. The stabilization of critically short telomeres through telomerase upregulation or less typically via homologous recombination-based alternate lengthening of telomeres allows tumor cells to escape replicative senescence or tide over the replicative crisis to continued cell divisions through the stages of cancer progression[2, 52]. The detection of recurrent genetic alterations associated with repeat preservation at chromosomal ends through large-scale pan-cancer whole-genome studies has highlighted the importance of the telomere maintenance mechanism in cancers[53, 54]. Telomerase reactivation in tumors occurs through several mechanisms, including amplification, rearrangements, viral integrations, and promoter methylation at the locus leading to increased *TERT* transcription[55-60]. The discovery of the mutations within the core promoter of the *TERT* gene, described as a milestone in telomere biology, afforded a definite mechanism of telomerase upregulation[61-63]. Those noncoding mutations, abundant mainly in cancers that arise from tissues with low rates of self-renewal, cause a moderate increase in *TERT* transcription to rejuvenate telomerase to the levels that delay replicative senescence[61, 62, 64-67].

This review discusses the occurrence and impact of the promoter mutations and highlights the mechanism through which those alterations upregulate *TERT* and reactivate telomerase. We further deliberate on the foundational question of the abundance of the *TERT* promoter mutations in tumors from tissues with low rates of self-renewal and a general dearth of noncoding mutations in cancers, as evident from pan-cancer analysis of the whole genomes[68].

Discovery of the *TERT* promoter mutations

The *TERT* promoter mutations were discovered simultaneously through two different approaches[61, 62]. One group found the somatic *TERT* promoter mutations by analyzing whole-genome data from tumors of unrelated melanoma patients followed by validation in an extended set of tumors[62]. The second group arrived at those mutations prompted by discovering a highly penetrant germline mutation in a large melanoma family through linkage analysis[61]. Both groups identified high-frequency mutually exclusive heterozygous C>T mutations at -124 (1,295,228) and -146 (1,295,250; Figure 1) bp positions from the ATG start site. Both mutations create *de novo* binding sites for ETS transcription factors with the GGAA/T as a general recognition motif and the CCGGAA/T motif for ternary complex factors (TCF)[61, 62]. The investigators that identified the promoter mutations from whole-genome sequencing data also found those alterations in cell lines from various other cancers[62]. The reporter assays with somatic *TERT* promoter mutant constructs displayed a two- to fourfold increase in transcriptional activity over the background of the wild-type sequence[62].

The other group initially identified a highly penetrant germline *TERT* promoter mutation through linkage analysis of a large melanoma pedigree with 14 related patients[61]. Targeted sequencing of the disease-linked 2.2 Mb region on chromosome 5p led to the identification of the causal A>C variant at -57 base pairs (bp) position (Chr 5: 1,295,161 hg19 coordinate; Figure 1) from the ATG start site of the *TERT* gene in the affected individuals. The identified single nucleotide transversion (CC<u>T</u>GAA>CC<u>G</u>GAA; +strand) creates a *de novo* binding site for ETS/TCF transcription factors similar to the somatic

mutations. The altered base resulted in ~1.5-fold increased luciferase activity in reporter assays over the basal levels with the wild-type sequence[61].

The mutation carriers within the family developed melanoma with an early age of onset and rapid progression to fatal metastases; two individuals also presented additional malignancies. One person had ovarian cancer at age 27 and melanoma when 30 years old; another individual survived melanoma at age 20, later developed ovarian cancer, renal cell carcinoma, bladder cancer, mammary carcinoma, and finally bronchial carcinoma leading to her death at age 50[61]. The germline TERT promoter mutation detection is cited as a specific example of cancer-predisposing high-penetrant regulatory alteration[69]. A follow-up targeted sequencing initiative involving 675 melanoma families identified the same germline -57 A>C *TERT* promoter mutation in the affected individuals in a single 7-case melanoma family from Leeds[70]. With only two identified families, the germline *TERT* promoter mutation accounts for less than 1% of familial melanoma[48]. Further studies on cancer-prone families also reported disease segregating missense variants in genes that encode shelterin components that included *POT1*, *ACD*, *TRF2*, and *TINF2*[71-74].

Distribution of somatic *TERT* promoter mutations

The somatic *TERT* promoter mutations occur in many cancers with an overall frequency of about 27 percent[55]. The frequency of those mutations varies among cancer types and sub-types, with the -124C>T base-change being overwhelmingly dominant in most cancers except for skin neoplasms[2, 57, 75-79]. In melanoma and non-melanoma skin cancers, the -146C>T mutation exceeds the -124C>T in frequency, signifying differences in etiology and distinct mechanisms of mutagenesis[78, 80-85]. The CC>TT tandem mutations at -124/-125 and -138/-139 bp positions from the ATG start site create identical binding motifs, occur specifically in skin cancers, and constitute about 10 percent of the detected *TERT* promoter alterations[61, 80, 86, 87]. The -138/-139 CC>TT mutation also appears infrequently in non-skin cancers as the base-change at -139 bp is reported as a rare C>T polymorphism represented by rs35550267[2, 88]. Other non-frequent somatic mutations within the *TERT* promoter detected in different cancers

include the -124C>A and -57C>A, with the latter initially described as the causal familial germline mutation[61, 88].

The *TERT* promoter mutations predominantly occur in tumors from tissues with low rates of self-renewal due to limiting telomerase levels in the transforming cells[65, 75]. The acquisition of the promoter mutations in melanoma, liposarcoma, hepatocellular carcinoma, urothelial carcinoma, and medulloblastoma due to lack of telomerase becomes advantageous for instantaneous proliferation[65, 75, 78]. For tumors arising from telomerase-positive cells -including cancers of the hematopoietic system, gastrointestinal stromal, lung, ovary, uterine cervix, and prostate- the initial acquisition of *TERT* promoter mutations would unlikely be of any selective advantage[65, 75, 89-94]. That paradigm is supported by the acquisition of the *TERT* promoter mutations as a somatic genetic rescue mechanism in patients with pulmonary fibrosis and aplastic anemia caused by telomerase loss due to germline variants in telomere-related genes[95-97].

Impact of *TERT* promoter mutations

Since the discovery, a staggering number of studies and publications have resolved the discrete aspects, effects, and clinical relevance of the *TERT* promoter mutations. Pan-cancer cell lines with the *TERT* promoter mutations exhibit gene-expression characteristics dominated by epithelial to mesenchymal transition and MAPK activation signaling generating distinct tumor environments and intercellular interactions[98]. The promoter alterations associate with cancer stemness through telomerase upregulation, link transcription of the telomerase catalytic subunit with oncogenic pathways, associate with markers of poor outcome, and define patients with reduced survival in different cancers[80, 86, 88, 99, 100]. Those mutations define a switch between adenomas and carcinomas of the liver and are a prerequisite for the rapid growth of tumors in isocitrate dehydrogenase (*IDH*) wild-type adult glioblastomas after years of dormancy[101-103].

The *TERT* promoter mutations with substantial frequencies occur mainly in specific clinical and phenotypic subtypes. In melanoma, those mutations associate with

advanced stages, markers of poor prognosis, increased tumor growth, and, together with *BRAF/NRAS* alterations, define patients with reduced disease-free and melanoma-specific survival[80, 86, 104-107]. A study to measure the effect of individual *TERT* promoter alterations showed that the less frequent -138/-139 CC>TT tandem mutation had the worst impact on disease-free and melanoma-specific survival in stage I and II patients[87]. In different melanocytic neoplasms, the *TERT* promoter mutations serve as ancillary tools for ambiguous histological tumors because of their high specificity for melanoma and absence in melanocytic nevi and melanocytes adjacent to the tumors[64, 108-111]. In bladder cancer, besides being associated with an increased disease recurrence and poor patient outcome, the specificity of the *TERT* promoter mutations distinguishes histologically deceptive cancers from benign mimics[88, 112]. In gliomas, the *TERT* promoter mutations associated with high disease grade, worst patient survival, and other markers follow histological classification into subgroups with distinct disease outcomes[75, 113-119]. An investigation based on editing out of the *TERT* promoter mutations showed that the local injection of adenine base editor fused to Campylobacter jejuni CRISPR-associated protein 9 inhibited the growth of gliomas harboring those alterations[120]. Those mutations cause aggressiveness in meningioma resulting in reduced patient survival and define a highly aggressive subgroup of patients with pleural mesothelioma[121, 122]. The *TERT* promoter mutations in combination with *BRAF* alterations define the most aggressive subtypes among papillary thyroid cancer patients with distance metastases, the highest recurrence, and mortality[123]. In differentiated thyroid cancer, the promoter mutations define an independent prognostic factor after adjusting for risk factors described in the 8th edition of the American Joint Committee on Cancer classification[124].

The *TERT* promoter mutations tend to occur together with other oncogenic alterations in different cancers with functional consequences. In melanoma and thyroid cancer, the promoter mutations occur more frequently in tumors over the background of *BRAF/NRAS* oncogenic alterations[61, 80, 123]. More than half of the melanoma tumors carrying *BRAF* or *NRAS* alterations acquire *TERT* promoter mutations with synergistic functional consequences[125]. In hepatocellular carcinoma, *TERT* promoter mutations

associate positively with *CTNNB1* and *ARID2* mutations as well as *CDKN2A* deletions[126]. *BRAF* mutations render *TERT* expression dependent on MAPK activation in tumors with the promoter mutations. Both alterations linked by ETS1 synergistically promote cancer cell proliferation and immortalization[127, 128]. The RAS-extracellular signal-regulated kinase (ERK) regulates the active chromatin state through physical binding of ERK2 to the mutant *TERT* promoter via displacement of histone deacetylase 1, leading to the recruitment of RNA polymerase II[100, 129]. Activated MAPK also phosphorylates FOS to upregulate GABPB, which in turn binds to the mutant *TERT* promoter[130]. FOS inhibitor T-5224 reportedly suppresses growth in cancer cells and tumor xenografts with the *TERT* promoter mutations by inducing apoptosis, the transcriptional activation of tumor necrosis factor-related apoptosis-inducing ligand receptor 2 (TRAIL-R2), and inactivation of survivin[131]. The presence of *TERT* promoter mutations in cell lines over the background of activated BRAF triggers strong apoptosis-induced cell death upon treatment with MAPK inhibitors that abolishes the growth of *in vivo* tumors harboring both mutations[132].

A polymorphism rs2853669 at the -245 bp position (Figure 1) from the ATG site within the proximal promoter of the *TERT* gene modulates the effect of the mutations on disease outcome as reported in different cancers[86, 88, 106, 117, 133, 134]. The variant allele disrupts a preexisting non-canonical ETS2 site adjacent to an E-box in the proximal region of the *TERT* promoter[135]. Experiments based on bacterial artificial chromosomes identified that as the upstream of the two ETS sites on the *TERT* promoter. ETV5 binds at those ETS sites through interaction with c-Myc/Max and in conjunction with E-boxes[136]. The core *TERT* promoter consists of 260 base pairs with several transcription factor-binding sites and lacks a TATA box or a similar sequence[136]. Other sequence elements on the *TERT* promoter include five GC-boxes, the binding sites for zinc-finger transcription factor family SP1. The binding of Sp1 and Sp3 to their cognate recognition sites leads to *TERT* transcription only in conjunction with a permissive chromatin environment; whereas, several factors, including p53, down-regulate *TERT* through interaction with Sp1 or other transcription factors[136-138].

The functionality of *TERT* promoter mutations

The *TERT* promoter mutations result in increased promoter activity in cells transfected with vectors containing the mutant constructs[61, 62, 88, 127]. The malignant lesions with the promoter mutations from various cancers exhibit a statistically significant enhanced *TERT* transcription and telomerase activity[80, 94, 114, 116, 139-143]. The introduction of the promoter mutations into stem cells prevents the repression of *TERT* at the point of differentiation, and the differentiated cells display telomerase activity comparable to immortal tumor cell lines[65]. Compared to the -57 A>C and -146 C>T mutations, the -124 C>T alteration exerts a maximal effect on *TERT* transcription in tumors and stem cells[65, 114, 144]. In addition, the *TERT* promoter mutations through *de novo* binding sites for ETS transcription factors increase chromatin accessibility, as shown by over-representation of the mutant alleles in ATAC-sequencing assays[145].

Transcription regulation by ETS factors -a large family with about 27 members reported in humans- involves multi-protein/DNA complexes[136, 146, 147]. In glioblastoma, liver cancer, and bladder cancer cell lines, the obligate multimeric ETS family member GA-binding protein, alpha subunit (GABPA) as a heteromeric complex with GABPB1 binds to the *de novo* consensus sites generated by the -124 C>T and -146 C>T mutations in cooperation with the native sites[148, 149]. The recruitment of GABP transcription factors also mediates a long-range chromatin interaction with sequence elements 300 kb upstream[150]. Studies in multiple cell lines demonstrated an epigenetic switch on the mutant allele to H3K4me2/3, a mark of active chromatin, along with the recruitment of RNA-polymerase II after the binding of GABPA/B1 complex leads to a monoallelic *TERT* expression[149, 151]. The wild-type allele, in contrast, retains H3K27me3, indicating a continued epigenetic silencing[149]. Experiments in glioblastoma cells showed that the disruption of GABPβ1L, a tetramer forming long isomer of GABPB1, decreased *TERT* expression, telomere loss, and cell death in the promoter mutation-dependent manner. In a xenograft model, the decrease in tumor growth in the brains of immunocompromised mice ensued the implantation of human cells with disrupted GABPβ1L[152]. Combined with temozolomide chemotherapy, inducible GABPβ1L knockdown and associated *TERT* reduction reportedly affects DNA damage response

leading to reduced growth of intracranial glioblastoma tumors[153]. Other ETS factors that bind those consensus sites on mutant alleles include ETS1 in glioblastoma and ETV5 in GABP-negative cell lines from thyroid cancer[128, 154]. The binding to the site created explicitly by the -146 C>T mutation also involves non-canonical NF-kB signaling with a cooperative binding between p52/RelB and ETS1[155, 156]. The *TERT* promoter mutations also map to the central quadruplex leading to possible alteration of hydrodynamic properties, stability, and local epigenetic modifications[157-159]. Additionally, the promoter mutations reportedly disrupt the binding of non-telomeric TRF2 to the G-quadruplex within the *TERT* promoter leading to telomerase reactivation[160].

***TERT* promoter mutations and telomere length**

Being causal for increased *TERT* and consequently telomerase levels, it was assumed that the promoter mutations would associate with increased telomere length. Based on the correlation in different human tissues, the telomere length in surrogate tissues like blood reflects the status in tumor-affected organs[161]. Measured in blood cells, individuals from the melanoma family carrying the germline -57 A>C *TERT* promoter mutation had extra-extended telomeres compared to the non-carriers[61, 162]. Similarly, teratomas originating from an injection of hESC with the -124 C>T *TERT* promoter mutation had telomere length comparable to that in undifferentiated cells [65]. In contrast, telomeres in general, due to the excessive proliferation or other disruptions like shelterin complex dysregulation, are shorter in tumors than in the noncancerous tissues[162-165]. Despite rejuvenated telomerase in most instances, cancers due to functional constraints maintain short telomeres, as the forced elongation results in differentiation and suppression of innate immune-related genes implicated in the maintenance of tumors in an undifferentiated state[166].

As observed in several cancers, telomeres are invariably shorter in tumors with the acquired *TERT* promoter mutations than those without[55, 114, 126, 134, 162, 167-170]. Earlier it was thought that the acquisition and the context at the telomere crisis during cellular transformation could be a reason for that observation in agreement with the reported reduced telomere contents in tumors with *TERT* modifications[54, 171]. Bypass of

replicative senescence and continued telomere attrition in affected cells was postulated to be causal for unstable genomes through cycles of end fusions and breakages with short telomeres causal for initiating cascades leading to chromothripsis and kataegis at the point of crisis[172, 173]. The later evidence pointed to an early occurrence of the *TERT* promoter mutations before biallelic inactivation of checkpoint inhibitors and continued shortening of telomeres in tumors as melanoma[64, 110, 174].

Based on experiments with isogenic human embryonic stem cells (hESC) experiments, it was proposed that the acquisition of *TERT* promoter mutations "rejuvenates telomerase sufficient to stabilize critically short telomeres to delay replicative senescence but insufficient to prevent bulk telomere shortening"[64]. The continued proliferation in the process elicits genomic instability through an increased number of short telomeres setting the context for decreased telomere length in tumors with those mutations and selection pressure for telomerase upregulation[64]. A further increase in telomerase presumably pulls cells out of telomere crisis through an unknown mechanism with a heavily rearranged genome[3, 64]. The lack of correlation between the *TERT* promoter mutations and telomere length also extends to telomerase levels as the holoenzyme preferentially acts on the shortest telomeres[64, 99]. Transforming cells with relatively long telomeres, limited telomerase, and deleted checkpoints survive critical barriers until the telomerase upregulation. That is explained as an antecedent for the association between increased constitutive telomere length and cancer risk; the evolution of tumors is predicated on the serial accumulation of driver mutations through rapid cell divisions, and the variation in telomere length can affect the proliferative potential of premalignant cells[48, 64, 162, 175-179].

The context for the abundance of *TERT* promoter mutations

The discovery of the *TERT* promoter mutations represented two conceptual advancements, genomic alterations driving cancers via transcriptional alteration and a trail of missing mutations not accounted for through only coding sequences[53, 68, 180, 181]. That raised expectations for a surfeit of driver mutations lurking within the functional elements outside the protein-coding sequences in human cancers. The data from the

encyclopedia of DNA elements (ENCODE) project stressed the importance of genomic regulatory elements within the human genome and an enhanced understanding of the role of the spatial organization of the genome and cis-acting elements in gene regulation[182, 183]. The mutations within functional noncoding elements, including promoters, enhancers, insulators, long noncoding RNAs, and other regulatory elements, can affect expressions of disparate critical genes[66, 184]. Different initiatives did identify many mutations in the noncoding genome, particularly within the promoter regions of several genes in various cancers, albeit at relatively low frequencies and with less than consequential functional outcomes apart from a few exceptions[66, 68, 185-189]. However, the pan-cancer whole-genome studies based on the extended datasets from 2,658 genomes imply that independent of statistical power, noncoding cis-regulatory driver mutations in known cancer genes other than those within the *TERT* promoter are much less frequent than in the protein-coding sequences[68]. That foundational anomaly merits an attempt for an epistemological understanding.

The relative overrepresentation of the *TERT* promoter mutations may exist due to a vulnerable milieu at the locus where a single base alteration provides motifs for optimal binding of ETS transcription factors to drive up the transcription[190]. Upregulation of mutant allele-specific *TERT* transcription involves spatial architecture where binding of the GABPA/GABPB1 complexes at the *de novo* sites coopts optimally spaced preexisting tandem proximal native ETS sites[148]. Two in-phase proximal tandem native ETS sites within the *TERT* promoter at 30/53 and 25/48 base-pairs from the mutational sites at -124 and -146 bp from the ATG start site (Figure 2A), respectively, are obligatory for facile binding of the GABP heteromeric complex[148, 149]. The spatial arrangement between native and *de novo* ETS sites permits competitive recruitment of the GABP complex through the displacement of initially coopted ELF1/2 at the latter sites[191]. The fortuitous co-occurrence of the ideally spaced tandem native sites near the mutational hotspots on the *TERT* promoter, crucial for that optimal spatial architecture, may be less than a routine occurrence within promoters or other regulatory elements elsewhere in the genome. In the absence of such permissive settings, selecting a single mutation may not be as consequential as in the *TERT* promoter. The differences in

relative proximities and conformations between the preexisting sites and those created by different *TERT* promoter alterations could also be factors for the observed intra-mutational differences in transcription, mechanism, and disease outcomes[87, 114, 155, 156].

The heavy occurrence of a single oncogenic mutation in *BRAF* in melanoma and other cancers and the rareness of alterations at the corresponding residues in *ARAF* and *CRAF* paralogs affords a comparable analogy[192-194]. A single mutation at the V600 residue that mimics activation at two adjacent residues is sufficient to activate *BRAF* ~10-fold over basal levels[195, 196]. Constitutively phosphorylated S445 residue and the 448 residue with the phosphomimetic aspartic acid in *BRAF* (Figure 2B) eliminates the need for additional activating alterations, which would be essential for maximal activation in other RAF isoforms[192, 197]. Similar to the growth advantage accrued from a single nucleotide alteration in *BRAF*, the preexisting native ETS sites within the *TERT* promoter provide a background where the acquisition of a single base change creates an optimally spaced *de novo* ETS site with colossal consequences.

Besides, evolutionary constraints on the fraction of functional noncoding human genome may limit driver mutations outside the coding sequences. Despite the ENCODE biochemical annotations, much of the noncoding sequences other than DNase hypersensitive sites, promoters, and untranslated regions are not optimized for wider pan-mammalian conservation[198, 199]. Instead of a teleological narrative, much of the noncoding human sequences are thought to play nucleotypic or architectural roles without being constricted for specific functionality[199, 200]. For the human population to maintain a constant size through generations, increased fertility must compensate for the reduced mean fitness caused by deleterious mutations. Evolutionary and mutational load constraints arguably limit the functional fraction of the genome to the estimated ~8.2-15%[198, 200-202]. The lack of preexisting favorable constellations in functional elements further restricted by evolutionary constraints could limit the abundant selection of somatic mutations within the noncoding genome. Mutations within the *TERT* promoter fulfill many selection criteria for Darwinian evolutions of tumors that arise in tissues with low rates of self-renewal where upregulation of telomerase delays

replicative senescence[203]. The acquisition of the mutations and the consequent *de novo* sites in the human *TERT* promoter is analogous to GABP complex binding sites in somatic cells of rodents, which activate telomerase. The presence or absence of GABPA binding sites in the *TERT* promoter determines whether replicative senescence acts as a tumor suppressor in those species. The *TERT* promoter mutations, as asserted, provide a solution for Peto's paradox in rodents, based on the observed resistance of large-bodied species to develop cancer compared to small ones[204].

Conclusions

The gradual attrition of telomeres due to limited telomerase in most adult cells while quintessential for aging doubles as a natural barrier for cancer development predicated on the serial accumulation of driver mutations. Tumors attain an unlimited replicative potential primarily through telomerase regeneration via increased *TERT* transcription. The *TERT* promoter mutations represent a definite mechanism for telomerase regeneration predominantly in cancers that arise from tissues with low rates of self-renewal. The broadly distributed noncoding mutations have emerged as markers for histological diagnosis, poor disease outcomes in different cancers, and possibly therapeutical targets. The mechanism of the *TERT* activation through the promoter mutations has opened up a range of transcription factors and histone marks that associate with mutant alleles as potential treatment targets. The discovery of the *TERT* promoter mutations, unique in itself, held an unrealized promise of a surfeit of driver mutations in cancers within the noncoding genome. It is plausible that the lack of mutational abundance outside the coding sequences may be due to the lack of fortuitous genomic constellation as that within the *TERT* promoter and evolutionary constraints that limit the functional fraction within the human genome.

Conflict of interest

The authors declare no conflict of interest.

References

1. Roake CM, Artandi SE. Regulation of human telomerase in homeostasis and disease. *Nat Rev Mol Cell Biol* 2020;**21**: 384-97.

2. Heidenreich B, Kumar R. TERT promoter mutations in telomere biology. *Mutation research* 2017;**771**: 15-31.

3. Maciejowski J, de Lange T. Telomeres in cancer: tumour suppression and genome instability. *Nat Rev Mol Cell Biol* 2017;**18**: 175-86.

4. Nandakumar J, Cech TR. Finding the end: recruitment of telomerase to telomeres. *Nat Rev Mol Cell Biol* 2013;**14**: 69-82.

5. O'Sullivan RJ, Karlseder J. Telomeres: protecting chromosomes against genome instability. *Nat Rev Mol Cell Biol* 2010;**11**: 171-81.

6. Sfeir A, Kosiyatrakul ST, Hockemeyer D, MacRae SL, Karlseder J, Schildkraut CL, de Lange T. Mammalian telomeres resemble fragile sites and require TRF1 for efficient replication. *Cell* 2009;**138**: 90-103.

7. Blackburn EH, Epel ES, Lin J. Human telomere biology: A contributory and interactive factor in aging, disease risks, and protection. *Science (New York, NY)* 2015;**350**: 1193-8.

8. Ruis P, Boulton SJ. The end protection problem-an unexpected twist in the tail. *Genes Dev* 2021;**35**: 1-21.

9. Ruis P, Van Ly D, Borel V, Kafer GR, McCarthy A, Howell S, Blassberg R, Snijders AP, Briscoe J, Niakan KK, Marzec P, Cesare AJ, et al. TRF2-independent chromosome end protection during pluripotency. *Nature* 2021;**589**: 103-9.

10. Lim CJ, Cech TR. Shaping human telomeres: from shelterin and CST complexes to telomeric chromatin organization. *Nat Rev Mol Cell Biol* 2021.

11. Sfeir A, de Lange T. Removal of shelterin reveals the telomere end-protection problem. *Science (New York, NY)* 2012;**336**: 593-7.

12. de Lange T. How shelterin solves the telomere end-protection problem. *Cold Spring Harb Symp Quant Biol* 2010;**75**: 167-77.

13. Martínez P, Blasco MA. Replicating through telomeres: a means to an end. *Trends Biochem Sci* 2015;**40**: 504-15.

14. Ohki R, Tsurimoto T, Ishikawa F. In vitro reconstitution of the end replication problem. *Mol Cell Biol* 2001;**21**: 5753-66.

15. de Lange T. Shelterin-Mediated Telomere Protection. *Annu Rev Genet* 2018;**52**: 223-47.

16. Huffman KE, Levene SD, Tesmer VM, Shay JW, Wright WE. Telomere shortening is proportional to the size of the G-rich telomeric 3'-overhang. *The Journal of biological chemistry* 2000;**275**: 19719-22.

17. Timashev LA, De Lange T. Characterization of t-loop formation by TRF2. *Nucleus* 2020;**11**: 164-77.

18. Sarek G, Kotsantis P, Ruis P, Van Ly D, Margalef P, Borel V, Zheng XF, Flynn HR, Snijders AP, Chowdhury D, Cesare AJ, Boulton SJ. CDK phosphorylation of TRF2 controls t-loop dynamics during the cell cycle. *Nature* 2019;**575**: 523-7.

19. Wu P, van Overbeek M, Rooney S, de Lange T. Apollo contributes to G overhang maintenance and protects leading-end telomeres. *Mol Cell* 2010;**39**: 606-17.

20. Hayflick L. The illusion of cell immortality. *British journal of cancer* 2000;**83**: 841-6.

21. Srinivas N, Rachakonda S, Kumar R. Telomeres and Telomere Length: A General Overview. *Cancers* 2020;**12**.

22. Hanahan D, Weinberg RA. Hallmarks of cancer: the next generation. *Cell* 2011;**144**: 646-74.

23. Yuan X, Larsson C, Xu D. Mechanisms underlying the activation of TERT transcription and telomerase activity in human cancer: old actors and new players. *Oncogene* 2019;**38**: 6172-83.

24. Chakravarti D, LaBella KA, DePinho RA. Telomeres: history, health, and hallmarks of aging. *Cell* 2021.

25. López-Otín C, Blasco MA, Partridge L, Serrano M, Kroemer G. The hallmarks of aging. *Cell* 2013;**153**: 1194-217.

26. Opresko PL, Shay JW. Telomere-associated aging disorders. *Ageing Res Rev* 2017;**33**: 52-66.

27. Shay JW. Role of Telomeres and Telomerase in Aging and Cancer. *Cancer Discov* 2016;**6**: 584-93.

28. Grill S, Nandakumar J. Molecular mechanisms of telomere biology disorders. *The Journal of biological chemistry* 2020;**296**: 100064.

29. Sarek G, Marzec P, Margalef P, Boulton SJ. Molecular basis of telomere dysfunction in human genetic diseases. *Nat Struct Mol Biol* 2015;**22**: 867-74.

30. Xi L, Cech TR. Inventory of telomerase components in human cells reveals multiple subpopulations of hTR and hTERT. *Nucleic acids research* 2014;**42**: 8565-77.

31. Jiang J, Wang Y, Sušac L, Chan H, Basu R, Zhou ZH, Feigon J. Structure of Telomerase with Telomeric DNA. *Cell* 2018;**173**: 1179-90.e13.

32. Hockemeyer D, Collins K. Control of telomerase action at human telomeres. *Nat Struct Mol Biol* 2015;**22**: 848-52.

33. Dejene EA, Li Y, Showkatian Z, Ling H, Seto E. Regulation of poly(a)-specific ribonuclease activity by reversible lysine acetylation. *The Journal of biological chemistry* 2020;**295**: 10255-70.

34. Ghanim GE, Fountain AJ, van Roon AM, Rangan R, Das R, Collins K, Nguyen THD. Structure of human telomerase holoenzyme with bound telomeric DNA. *Nature* 2021;**593**: 449-53.

35. Schmidt JC, Zaug AJ, Kufer R, Cech TR. Dynamics of human telomerase recruitment depend on template- telomere base pairing. *Molecular biology of the cell* 2018.

36. Schaich MA, Sanford SL, Welfer GA, Johnson SA, Khoang TH, Opresko PL, Freudenthal BD. Mechanisms of nucleotide selection by telomerase. *Elife* 2020;**9**.

37. Greider CW. Regulating telomere length from the inside out: the replication fork model. *Genes Dev* 2016;**30**: 1483-91.

38. Rowland TJ, Dumbović G, Hass EP, Rinn JL, Cech TR. Single-cell imaging reveals unexpected heterogeneity of telomerase reverse transcriptase expression across human cancer cell lines. *Proceedings of the National Academy of Sciences of the United States of America* 2019;**116**: 18488-97.

39. Chiba K, Vogan JM, Wu RA, Gill MS, Zhang X, Collins K, Hockemeyer D. Endogenous Telomerase Reverse Transcriptase N-Terminal Tagging Affects Human Telomerase Function at Telomeres In Vivo. *Mol Cell Biol* 2017;**37**.

40. Armanios M, Blackburn EH. The telomere syndromes. *Nat Rev Genet* 2012;**13**: 693-704.

41. Sayed ME, Cheng A, Yadav GP, Ludlow AT, Shay JW, Wright WE, Jiang QX. Catalysis-dependent inactivation of human telomerase and its reactivation by intracellular telomerase-activating factors (iTAFs). *The Journal of biological chemistry* 2019;**294**: 11579-96.

42. Pike AM, Strong MA, Ouyang JPT, Greider CW. TIN2 Functions with TPP1/POT1 To Stimulate Telomerase Processivity. *Mol Cell Biol* 2019;**39**.

43. Chen LY, Redon S, Lingner J. The human CST complex is a terminator of telomerase activity. *Nature* 2012;**488**: 540-4.

44. Lim CJ, Barbour AT, Zaug AJ, Goodrich KJ, McKay AE, Wuttke DS, Cech TR. The structure of human CST reveals a decameric assembly bound to telomeric DNA. *Science (New York, NY)* 2020;**368**: 1081-5.

45. Boyle JM, Hennick KM, Regalado SG, Vogan JM, Zhang X, Collins K, Hockemeyer D. Telomere length set point regulation in human pluripotent stem cells critically depends on the shelterin protein TPP1. *Molecular biology of the cell* 2020;**31**: 2583-96.

46. Cheng D, Zhao Y, Wang S, Zhang F, Russo M, McMahon SB, Zhu J. Repression of telomerase gene promoter requires human-specific genomic context and is mediated by multiple HDAC1-containing corepressor complexes. *Faseb j* 2017;**31**: 1165-78.

47. Penev A, Bazley A, Shen M, Boeke JD, Savage SA, Sfeir A. Alternative splicing is a developmental switch for hTERT expression. *Mol Cell* 2021;**81**: 2349-60.e6.

48. McNally EJ, Luncsford PJ, Armanios M. Long telomeres and cancer risk: the price of cellular immortality. *The Journal of clinical investigation* 2019;**129**: 3474-81.

49. Nassour J, Schmidt TT, Karlseder J. Telomeres and Cancer: Resolving the Paradox. *Annual Review of Cancer Biology* 2021;**5**: 59-77.

50. Roake CM, Artandi SE. Control of Cellular Aging, Tissue Function, and Cancer by p53 Downstream of Telomeres. *Cold Spring Harb Perspect Med* 2017;**7**.

51. de Lange T. How telomeres solve the end-protection problem. *Science (New York, NY)* 2009;**326**: 948-52.

52. Cleal K, Baird DM. Catastrophic Endgames: Emerging Mechanisms of Telomere-Driven Genomic Instability. *Trends Genet* 2020;**36**: 347-59.

53. Pan-cancer analysis of whole genomes. *Nature* 2020;**578**: 82-93.

54. Sieverling L, Hong C, Koser SD, Ginsbach P, Kleinheinz K, Hutter B, Braun DM, Cortés-Ciriano I, Xi R, Kabbe R, Park PJ, Eils R, et al. Genomic footprints of activated telomere maintenance mechanisms in cancer. *Nature communications* 2020;**11**: 733.

55. Barthel FP, Wei W, Tang M, Martinez-Ledesma E, Hu X, Amin SB, Akdemir KC, Seth S, Song X, Wang Q, Lichtenberg T, Hu J, et al. Systematic analysis of telomere length and somatic alterations in 31 cancer types. *Nature genetics* 2017;**49**: 349-57.

56. Péneau C, Imbeaud S, La Bella T, Hirsch TZ, Caruso S, Calderaro J, Paradis V, Blanc JF, Letouzé E, Nault JC, Amaddeo G, Zucman-Rossi J. Hepatitis B virus integrations promote local and distant oncogenic driver alterations in hepatocellular carcinoma. *Gut* 2021.

57. Hennessey RC, Brown KM. Cancer regulatory variation. *Current opinion in genetics & development* 2021;**66**: 41-9.

58. Peifer M, Hertwig F, Roels F, Dreidax D, Gartlgruber M, Menon R, Krämer A, Roncaioli JL, Sand F, Heuckmann JM, Ikram F, Schmidt R, et al. Telomerase activation by genomic rearrangements in high-risk neuroblastoma. *Nature* 2015;**526**: 700-4.

59. Valentijn LJ, Koster J, Zwijnenburg DA, Hasselt NE, van Sluis P, Volckmann R, van Noesel MM, George RE, Tytgat GA, Molenaar JJ, Versteeg R. TERT rearrangements are frequent in neuroblastoma and identify aggressive tumors. *Nature genetics* 2015;**47**: 1411-4.

60. Rowland TJ, Bonham AJ, Cech TR. Allele-specific proximal promoter hypomethylation of the telomerase reverse transcriptase gene (TERT) associates with TERT expression in multiple cancers. *Mol Oncol* 2020;**14**: 2358-74.

61. Horn S, Figl A, Rachakonda PS, Fischer C, Sucker A, Gast A, Kadel S, Moll I, Nagore E, Hemminki K, Schadendorf D, Kumar R. TERT promoter mutations in familial and sporadic melanoma. *Science (New York, NY)* 2013;**339**: 959-61.

62. Huang FW, Hodis E, Xu MJ, Kryukov GV, Chin L, Garraway LA. Highly recurrent TERT promoter mutations in human melanoma. *Science (New York, NY)* 2013;**339**: 957-9.

63. Shay JW, Wright WE. Telomeres and telomerase: three decades of progress. *Nat Rev Genet* 2019;**20**: 299-309.

64. Chiba K, Lorbeer FK, Shain AH, McSwiggen DT, Schruf E, Oh A, Ryu J, Darzacq X, Bastian BC, Hockemeyer D. Mutations in the promoter of the telomerase gene TERT contribute to tumorigenesis by a two-step mechanism. *Science (New York, NY)* 2017;**357**: 1416-20.

65. Chiba K, Johnson JZ, Vogan JM, Wagner T, Boyle JM, Hockemeyer D. Cancer-associated TERT promoter mutations abrogate telomerase silencing. *Elife* 2015;**4**.

66. Heidenreich B, Kumar R. Altered TERT promoter and other genomic regulatory elements: occurrence and impact. *International journal of cancer* 2017;**141**: 867-76.

67. Lorbeer FK, Hockemeyer D. TERT promoter mutations and telomeres during tumorigenesis. *Current opinion in genetics & development* 2020;**60**: 56-62.

68. Rheinbay E, Nielsen MM, Abascal F, Wala JA, Shapira O, Tiao G, Hornshøj H, Hess JM, Juul RI, Lin Z, Feuerbach L, Sabarinathan R, et al. Analyses of non-coding somatic drivers in 2,658 cancer whole genomes. *Nature* 2020;**578**: 102-11.

69. Rahman N. Realizing the promise of cancer predisposition genes. *Nature* 2014;**505**: 302-8.

70. Harland M, Petljak M, Robles-Espinoza CD, Ding Z, Gruis NA, van Doorn R, Pooley KA, Dunning AM, Aoude LG, Wadt KA, Gerdes AM, Brown KM, et al. Germline TERT promoter mutations are rare in familial melanoma. *Fam Cancer* 2016;**15**: 139-44.

71. Shi J, Yang XR, Ballew B, Rotunno M, Calista D, Fargnoli MC, Ghiorzo P, Bressac-de Paillerets B, Nagore E, Avril MF, Caporaso NE, McMaster ML, et al. Rare missense variants in POT1 predispose to familial cutaneous malignant melanoma. *Nat Genet* 2014;**46**: 482-6.

72. Robles-Espinoza CD, Harland M, Ramsay AJ, Aoude LG, Quesada V, Ding Z, Pooley KA, Pritchard AL, Tiffen JC, Petljak M, Palmer JM, Symmons J, et al. POT1 loss-of-function variants predispose to familial melanoma. *Nat Genet* 2014;**46**: 478-81.

73. Aoude LG, Pritchard AL, Robles-Espinoza CD, Wadt K, Harland M, Choi J, Gartside M, Quesada V, Johansson P, Palmer JM, Ramsay AJ, Zhang X, et al. Nonsense mutations in the shelterin complex genes ACD and TERF2IP in familial melanoma. *Journal of the National Cancer Institute* 2015;**107**.

74. Schmutz I, Mensenkamp AR, Takai KK, Haadsma M, Spruijt L, de Voer RM, Choo SS, Lorbeer FK, van Grinsven EJ, Hockemeyer D, Jongmans MC, de Lange T. TINF2 is a haploinsufficient tumor suppressor that limits telomere length. *Elife* 2020;**9**.

75. Killela PJ, Reitman ZJ, Jiao Y, Bettegowda C, Agrawal N, Diaz LA, Jr., Friedman AH, Friedman H, Gallia GL, Giovanella BC, Grollman AP, He TC, et al. TERT promoter mutations occur frequently in gliomas and a subset of tumors derived from cells with low rates of self-renewal. *Proceedings of the National Academy of Sciences of the United States of America* 2013;**110**: 6021-6.

76. Vinagre J, Almeida A, Populo H, Batista R, Lyra J, Pinto V, Coelho R, Celestino R, Prazeres H, Lima L, Melo M, da Rocha AG, et al. Frequency of TERT promoter mutations in human cancers. *Nature communications* 2013;**4**: 2185.

77. Bell RJ, Rube HT, Xavier-Magalhaes A, Costa BM, Mancini A, Song JS, Costello JF. Understanding TERT Promoter Mutations: A Common Path to Immortality. *Molecular cancer research : MCR* 2016;**14**: 315-23.

78. Heidenreich B, Rachakonda PS, Hemminki K, Kumar R. TERT promoter mutations in cancer development. *Current opinion in genetics & development* 2014;**24**: 30-7.

79. Maturo MG, Rachakonda S, Heidenreich B, Pellegrini C, Srinivas N, Requena C, Serra-Guillen C, Llombart B, Sanmartin O, Guillen C, Di Nardo L, Peris K, et al. Coding and noncoding somatic mutations in candidate genes in basal cell carcinoma. *Scientific reports* 2020;**10**: 8005.

80. Heidenreich B, Nagore E, Rachakonda PS, Garcia-Casado Z, Requena C, Traves V, Becker J, Soufir N, Hemminki K, Kumar R. Telomerase reverse transcriptase promoter mutations in primary cutaneous melanoma. *Nature communications* 2014;**5**: 3401.

81. Griewank KG, Murali R, Schilling B, Schimming T, Moller I, Moll I, Schwamborn M, Sucker A, Zimmer L, Schadendorf D, Hillen U. TERT promoter mutations are frequent in cutaneous basal cell carcinoma and squamous cell carcinoma. *PloS one* 2013;**8**: e80354.

82. Scott GA, Laughlin TS, Rothberg PG. Mutations of the TERT promoter are common in basal cell carcinoma and squamous cell carcinoma. *Mod Pathol* 2014;**27**: 516-23.

83. Denisova E, Heidenreich B, Nagore E, Rachakonda PS, Hosen I, Akrap I, Traves V, García-Casado Z, López-Guerrero JA, Requena C, Sanmartin O, Serra-Guillén C, et al. Frequent DPH3 promoter mutations in skin cancers. *Oncotarget* 2015;**6**: 35922-30.

84. Srinivas N, Neittaanmäki N, Heidenreich B, Rachakonda S, Karppinen TT, Grönroos M, Tani TT, Salmivuori M, Snellman E, Hemminki K, Kumar R. TERT promoter mutations in actinic keratosis before and after treatment. *International journal of cancer* 2020;**146**: 2932-4.

85. Yu D, Horton JR, Yang J, Hajian T, Vedadi M, Sagum Cari A, Bedford Mark T, Blumenthal Robert M, Zhang X, Cheng X. Human MettL3-MettL14 RNA adenine methyltransferase complex is active on double-stranded DNA containing lesions. *Nucleic acids research* 2021.

86. Nagore E, Heidenreich B, Rachakonda S, Garcia-Casado Z, Requena C, Soriano V, Frank C, Traves V, Quecedo E, Sanjuan-Gimenez J, Hemminki K, Landi MT, et al. TERT promoter mutations in melanoma survival. *International journal of cancer* 2016;**139**: 75-84.

87. Andrés-Lencina JJ, Rachakonda S, García-Casado Z, Srinivas N, Skorokhod A, Requena C, Soriano V, Kumar R, Nagore E. TERT promoter mutation subtypes and survival in stage I and II melanoma patients. *International journal of cancer* 2019;**144**: 1027-36.

88. Rachakonda PS, Hosen I, de Verdier PJ, Fallah M, Heidenreich B, Ryk C, Wiklund NP, Steineck G, Schadendorf D, Hemminki K, Kumar R. TERT promoter mutations in bladder cancer affect patient survival and disease recurrence through modification by a common polymorphism. *Proceedings of the National Academy of Sciences of the United States of America* 2013;**110**: 17426-31.

89. Campanella NC, Celestino R, Pestana A, Scapulatempo-Neto C, de Oliveira AT, Brito MJ, Gouveia A, Lopes JM, Guimaraes DP, Soares P, Reis RM. Low frequency of TERT promoter mutations in gastrointestinal stromal tumors (GISTs). *Eur J Hum Genet* 2015;**23**: 877-9.

90. Wu RC, Ayhan A, Maeda D, Kim KR, Clarke BA, Shaw P, Chui MH, Rosen B, Shih Ie M, Wang TL. Frequent somatic mutations of the telomerase reverse transcriptase promoter in ovarian clear cell carcinoma but not in other major types of gynaecological malignancy. *J Pathol* 2014;**232**: 473-81.

91. Wu S, Huang P, Li C, Huang Y, Li X, Wang Y, Chen C, Lv Z, Tang A, Sun X, Lu J, Li W, et al. Telomerase reverse transcriptase gene promoter mutations help discern the origin of urogenital tumors: a genomic and molecular study. *Eur Urol* 2014;**65**: 274-7.

92. Stoehr R, Taubert H, Zinnall U, Giedl J, Gaisa NT, Burger M, Ruemmele P, Hurst CD, Knowles MA, Wullich B, Hartmann A. Frequency of TERT Promoter Mutations in Prostate Cancer. *Pathobiology* 2015;**82**: 53-7.

93. Panero J, Alves-Paiva RM, Roisman A, Santana-Lemos BA, Falcao RP, Oliveira G, Martins D, Stanganelli C, Slavutsky I, Calado RT. Acquired TERT promoter mutations stimulate TERT transcription in mantle cell lymphoma. *Am J Hematol* 2016;**91**: 481-5.

94. Huang DS, Wang Z, He XJ, Diplas BH, Yang R, Killela PJ, Meng Q, Ye ZY, Wang W, Jiang XT, Xu L, He XL, et al. Recurrent TERT promoter mutations identified in a large-scale study of multiple tumour types are associated with increased TERT expression and telomerase activation. *European journal of cancer (Oxford, England : 1990)* 2015;**51**: 969-76.

95. Revy P, Kannengiesser C, Fischer A. Somatic genetic rescue in Mendelian haematopoietic diseases. *Nat Rev Genet* 2019;**20**: 582-98.

96. Gutierrez-Rodrigues F, Donaires FS, Pinto A, Vicente A, Dillon LW, Clé DV, Santana BA, Pirooznia M, Ibanez M, Townsley DM, Kajigaya S, Hourigan CS, et al. Pathogenic TERT promoter variants

in telomere diseases. *Genetics in medicine : official journal of the American College of Medical Genetics* 2019;**21**: 1594-602.

97. Maryoung L, Yue Y, Young A, Newton CA, Barba C, van Oers NS, Wang RC, Garcia CK. Somatic mutations in telomerase promoter counterbalance germline loss-of-function mutations. *The Journal of clinical investigation* 2017;**127**: 982-6.

98. Stern JL, Hibshman G, Hu K, Ferrara SE, Costello JC, Kim W, Tamayo P, Cech TR, Huang FW. Mesenchymal and MAPK Expression Signatures Associate with Telomerase Promoter Mutations in Multiple Cancers. *Molecular cancer research : MCR* 2020;**18**: 1050-62.

99. Noureen N, Wu S, Lv Y, Yang J, Alfred Yung WK, Gelfond J, Wang X, Koul D, Ludlow A, Zheng S. Integrated analysis of telomerase enzymatic activity unravels an association with cancer stemness and proliferation. *Nature communications* 2021;**12**: 139.

100. Li Y, Cheng HS, Chng WJ, Tergaonkar V. Activation of mutant TERT promoter by RAS-ERK signaling is a key step in malignant progression of BRAF-mutant human melanomas. *Proceedings of the National Academy of Sciences of the United States of America* 2016;**113**: 14402-7.

101. Pinyol R, Tovar V, Llovet JM. TERT promoter mutations: gatekeeper and driver of hepatocellular carcinoma. *J Hepatol* 2014;**61**: 685-7.

102. Pilati C, Letouzé E, Nault JC, Imbeaud S, Boulai A, Calderaro J, Poussin K, Franconi A, Couchy G, Morcrette G, Mallet M, Taouji S, et al. Genomic profiling of hepatocellular adenomas reveals recurrent FRK-activating mutations and the mechanisms of malignant transformation. *Cancer cell* 2014;**25**: 428-41.

103. Körber V, Yang J, Barah P, Wu Y, Stichel D, Gu Z, Fletcher MNC, Jones D, Hentschel B, Lamszus K, Tonn JC, Schackert G, et al. Evolutionary Trajectories of IDH(WT) Glioblastomas Reveal a Common Path of Early Tumorigenesis Instigated Years ahead of Initial Diagnosis. *Cancer cell* 2019;**35**: 692-704.e12.

104. Griewank KG, Murali R, Puig-Butille JA, Schilling B, Livingstone E, Potrony M, Carrera C, Schimming T, Möller I, Schwamborn M, Sucker A, Hillen U, et al. TERT promoter mutation status as an independent prognostic factor in cutaneous melanoma. *Journal of the National Cancer Institute* 2014;**106**.

105. Nagore E, Heidenreich B, Requena C, Garcia-Casado Z, Martorell-Calatayud A, Pont-Sanjuan V, Jimenez-Sanchez AI, Kumar R. TERT promoter mutations associate with fast-growing melanoma. *Pigment cell & melanoma research* 2016;**29**: 236-8.

106. Nagore E, Rachakonda S, Kumar R. TERT promoter mutations in melanoma survival. *Oncotarget* 2019;**10**: 1546-8.

107. Gandini S, Zanna I, De Angelis S, Palli D, Raimondi S, Ribero S, Masala G, Suppa M, Bellerba F, Corso F, Nezi L, Nagore E, et al. TERT promoter mutations and melanoma survival: a comprehensive literature review and meta-analysis. *Crit Rev Oncol Hematol* 2021: 103288.

108. Walton KE, Garfield EM, Zhang B, Quan VL, Shi K, Mohan LS, Haugh AM, VandenBoom T, Yazdan P, Isales MC, Panah E, Gerami P. The role of TERT promoter mutations in differentiating recurrent nevi from recurrent melanomas: A retrospective, case-control study. *Journal of the American Academy of Dermatology* 2019;**80**: 685-93.

109. Thomas NE, Edmiston SN, Tsai YS, Parker JS, Googe PB, Busam KJ, Scott GA, Zedek DC, Parrish EA, Hao H, Slater NA, Pearlstein MV, et al. Utility of TERT Promoter Mutations for Cutaneous Primary Melanoma Diagnosis. *The American Journal of dermatopathology* 2019;**41**: 264-72.

110. Shain AH, Yeh I, Kovalyshyn I, Sriharan A, Talevich E, Gagnon A, Dummer R, North J, Pincus L, Ruben B, Rickaby W, D'Arrigo C, et al. The Genetic Evolution of Melanoma from Precursor Lesions. *N Engl J Med* 2015;**373**: 1926-36.

111. Tang J, Fewings E, Chang D, Zeng H, Liu S, Jorapur A, Belote RL, McNeal AS, Tan TM, Yeh I, Arron ST, Judson-Torres RL, et al. The genomic landscapes of individual melanocytes from human skin. *Nature* 2020;**586**: 600-5.

112. Warrick JI, Knowles MA, Yves A, van der Kwast T, Grignon DJ, Kristiansen G, Egevad L, Hartmann A, Cheng L. Report From the International Society of Urological Pathology (ISUP) Consultation Conference On Molecular Pathology Of Urogenital Cancers. II. Molecular Pathology of Bladder Cancer: Progress and Challenges. *Am J Surg Pathol* 2020;**44**: e30-e46.

113. Kessler T, Berberich A, Sadik A, Sahm F, Gorlia T, Meisner C, Hoffmann DC, Wick A, Kickingereder P, Rübmann P, Bendszus M, Opitz C, et al. Methylome analyses of three glioblastoma cohorts reveal chemotherapy sensitivity markers within DDR genes. *Cancer Med* 2020;**9**: 8373-85.

114. Heidenreich B, Rachakonda PS, Hosen I, Volz F, Hemminki K, Weyerbrock A, Kumar R. TERT promoter mutations and telomere length in adult malignant gliomas and recurrences. *Oncotarget* 2015;**6**: 10617-33.

115. Eckel-Passow JE, Lachance DH, Molinaro AM, Walsh KM, Decker PA, Sicotte H, Pekmezci M, Rice T, Kosel ML, Smirnov IV, Sarkar G, Caron AA, et al. Glioma Groups Based on 1p/19q, IDH, and TERT Promoter Mutations in Tumors. *N Engl J Med* 2015;**372**: 2499-508.

116. Labussière M, Boisselier B, Mokhtari K, Di Stefano AL, Rahimian A, Rossetto M, Ciccarino P, Saulnier O, Paterra R, Marie Y, Finocchiaro G, Sanson M. Combined analysis of TERT, EGFR, and IDH status defines distinct prognostic glioblastoma classes. *Neurology* 2014;**83**: 1200-6.

117. Powter B, Jeffreys SA, Sareen H, Cooper A, Brungs D, Po J, Roberts T, Koh ES, Scott KF, Sajinovic M, Vessey JY, de Souza P, et al. Human TERT promoter mutations as a prognostic biomarker in glioma. *Journal of cancer research and clinical oncology* 2021.

118. Ersoy TF, Keil VC, Hadizadeh DR, Gielen GH, Fimmers R, Waha A, Heidenreich B, Kumar R, Schild HH, Simon M. New prognostic factor telomerase reverse transcriptase promotor mutation presents without MR imaging biomarkers in primary glioblastoma. *Neuroradiology* 2017;**59**: 1223-31.

119. Simon M, Hosen I, Gousias K, Rachakonda S, Heidenreich B, Gessi M, Schramm J, Hemminki K, Waha A, Kumar R. TERT promoter mutations: a novel independent prognostic factor in primary glioblastomas. *Neuro-oncology* 2015;**17**: 45-52.

120. Li X, Qian X, Wang B, Xia Y, Zheng Y, Du L, Xu D, Xing D, DePinho RA, Lu Z. Programmable base editing of mutated TERT promoter inhibits brain tumour growth. *Nat Cell Biol* 2020;**22**: 282-8.

121. Spiegl-Kreinecker S, Lötsch D, Neumayer K, Kastler L, Gojo J, Pirker C, Pichler J, Weis S, Kumar R, Webersinke G, Gruber A, Berger W. TERT promoter mutations are associated with poor prognosis and cell immortalization in meningioma. *Neuro-oncology* 2018;**20**: 1584-93.

122. Pirker C, Bilecz A, Grusch M, Mohr T, Heidenreich B, Laszlo V, Stockhammer P, Lötsch-Gojo D, Gojo J, Gabler L, Spiegl-Kreinecker S, Dome B, et al. Telomerase Reverse Transcriptase Promoter Mutations Identify a Genomically Defined and Highly Aggressive Human Pleural Mesothelioma Subgroup. *Clinical cancer research : an official journal of the American Association for Cancer Research* 2020;**26**: 3819-30.

123. Xing M, Liu R, Liu X, Murugan AK, Zhu G, Zeiger MA, Pai S, Bishop J. BRAF V600E and TERT promoter mutations cooperatively identify the most aggressive papillary thyroid cancer with highest recurrence. *J Clin Oncol* 2014;**32**: 2718-26.

124. Park J, Lee S, Kim K, Park H, Ki C-S, Oh YL, Shin JH, Kim JS, Kim SW, Chung JH, Kim TH. TERT Promoter Mutations and the 8th Edition TNM Classification in Predicting the Survival of Thyroid Cancer Patients. *Cancers* 2021;**13**: 648.

125. Manrique-Silva E, Rachakonda S, Millan-Esteban D, Garcia-Casado Z, Requena C, Traves V, Kumar R, Nagore E. Clinical, environmental and histological distribution of BRAF, NRAS and TERT promoter mutations among patients with cutaneous melanoma: a retrospective study of 563 patients. *The British journal of dermatology* 2020.

126. Ningarhari M, Caruso S, Hirsch TZ, Bayard Q, Franconi A, Védie AL, Noblet B, Blanc JF, Amaddeo G, Ganne N, Ziol M, Paradis V, et al. Telomere length is key to hepatocellular carcinoma diversity and telomerase addiction is an actionable therapeutic target. *J Hepatol* 2020.

127. Vallarelli AF, Rachakonda PS, André J, Heidenreich B, Riffaud L, Bensussan A, Kumar R, Dumaz N. TERT promoter mutations in melanoma render TERT expression dependent on MAPK pathway activation. *Oncotarget* 2016;**7**: 53127-36.

128. Gabler L, Lötsch D, Kirchhofer D, van Schoonhoven S, Schmidt HM, Mayr L, Pirker C, Neumayer K, Dinhof C, Kastler L, Azizi AA, Dorfer C, et al. TERT expression is susceptible to BRAF and ETS-factor inhibition in BRAF(V600E)/TERT promoter double-mutated glioma. *Acta neuropathologica communications* 2019;**7**: 128.

129. Wu Y, Shi L, Zhao Y, Chen P, Cui R, Ji M, He N, Wang M, Li G, Hou P. Synergistic activation of mutant TERT promoter by Sp1 and GABPA in BRAFV600E-driven human cancers. *npj Precision Oncology* 2021;**5**: 3.

130. Liu R, Zhang T, Zhu G, Xing M. Regulation of mutant TERT by BRAF V600E/MAP kinase pathway through FOS/GABP in human cancer. *Nature communications* 2018;**9**: 579.

131. Liu R, Tan J, Shen X, Jiang K, Wang C, Zhu G, Xing M. Therapeutic targeting of FOS in mutant TERT cancers through removing TERT suppression of apoptosis via regulating survivin and TRAIL-R2. *Proceedings of the National Academy of Sciences* 2021;**118**: e2022779118.

132. Tan J, Liu R, Zhu G, Umbricht CB, Xing M. TERT promoter mutation determines apoptotic and therapeutic responses of BRAF-mutant cancers to BRAF and MEK inhibitors: Achilles Heel. *Proceedings of the National Academy of Sciences of the United States of America* 2020;**117**: 15846-51.

133. Hosen I, Rachakonda PS, Heidenreich B, Sitaram RT, Ljungberg B, Roos G, Hemminki K, Kumar R. TERT promoter mutations in clear cell renal cell carcinoma. *International journal of cancer* 2015;**136**: 2448-52.

134. Hosen I, Rachakonda PS, Heidenreich B, de Verdier PJ, Ryk C, Steineck G, Hemminki K, Kumar R. Mutations in TERT promoter and FGFR3 and telomere length in bladder cancer. *International journal of cancer* 2015;**137**: 1621-9.

135. Xu D, Dwyer J, Li H, Duan W, Liu JP. Ets2 maintains hTERT gene expression and breast cancer cell proliferation by interacting with c-Myc. *The Journal of biological chemistry* 2008;**283**: 23567-80.

136. Zhang F, Wang S, Zhu J. ETS variant transcription factor 5 and c-Myc cooperate in derepressing the human telomerase gene promoter via composite ETS/E-box motifs. *The Journal of biological chemistry* 2020;**295**: 10062-75.

137. Kyo S, Takakura M, Fujiwara T, Inoue M. Understanding and exploiting hTERT promoter regulation for diagnosis and treatment of human cancers. *Cancer Sci* 2008;**99**: 1528-38.

138. Kanaya T, Kyo S, Hamada K, Takakura M, Kitagawa Y, Harada H, Inoue M. Adenoviral expression of p53 represses telomerase activity through down-regulation of human telomerase reverse transcriptase transcription. *Clinical cancer research : an official journal of the American Association for Cancer Research* 2000;**6**: 1239-47.

139. Lee S, Opresko P, Pappo A, Kirkwood JM, Bahrami A. Association of TERT promoter mutations with telomerase expression in melanoma. *Pigment cell & melanoma research* 2016;**29**: 391-3.

140. Arita H, Narita Y, Takami H, Fukushima S, Matsushita Y, Yoshida A, Miyakita Y, Ohno M, Shibui S, Ichimura K. TERT promoter mutations rather than methylation are the main mechanism for TERT upregulation in adult gliomas. *Acta Neuropathol* 2013;**126**: 939-41.

141. Bahrami A, Lee S, Schaefer IM, Boland JM, Patton KT, Pounds S, Fletcher CD. TERT promoter mutations and prognosis in solitary fibrous tumor. *Mod Pathol* 2016;**29**: 1511-22.

142. Lötsch D, Ghanim B, Laaber M, Wurm G, Weis S, Lenz S, Webersinke G, Pichler J, Berger W, Spiegl-Kreinecker S. Prognostic significance of telomerase-associated parameters in glioblastoma: effect of patient age. *Neuro-oncology* 2013;**15**: 423-32.

143. Borah S, Xi L, Zaug AJ, Powell NM, Dancik GM, Cohen SB, Costello JC, Theodorescu D, Cech TR. Cancer. TERT promoter mutations and telomerase reactivation in urothelial cancer. *Science (New York, NY)* 2015;**347**: 1006-10.

144. Genomic Classification of Cutaneous Melanoma. *Cell* 2015;**161**: 1681-96.

145. Corces MR, Granja JM, Shams S, Louie BH, Seoane JA, Zhou W, Silva TC, Groeneveld C, Wong CK, Cho SW, Satpathy AT, Mumbach MR, et al. The chromatin accessibility landscape of primary human cancers. *Science (New York, NY)* 2018;**362**.

146. Cooper CD, Newman JA, Aitkenhead H, Allerston CK, Gileadi O. Structures of the Ets Protein DNA-binding Domains of Transcription Factors Etv1, Etv4, Etv5, and Fev: DETERMINANTS OF DNA BINDING AND REDOX REGULATION BY DISULFIDE BOND FORMATION. *The Journal of biological chemistry* 2015;**290**: 13692-709.

147. Sizemore GM, Pitarresi JR, Balakrishnan S, Ostrowski MC. The ETS family of oncogenic transcription factors in solid tumours. *Nat Rev Cancer* 2017;**17**: 337-51.

148. Bell RJ, Rube HT, Kreig A, Mancini A, Fouse SD, Nagarajan RP, Choi S, Hong C, He D, Pekmezci M, Wiencke JK, Wrensch MR, et al. Cancer. The transcription factor GABP selectively binds and activates the mutant TERT promoter in cancer. *Science (New York, NY)* 2015;**348**: 1036-9.

149. Stern JL, Theodorescu D, Vogelstein B, Papadopoulos N, Cech TR. Mutation of the TERT promoter, switch to active chromatin, and monoallelic TERT expression in multiple cancers. *Genes Dev* 2015;**29**: 2219-24.

150. Akıncılar SC, Khattar E, Boon PL, Unal B, Fullwood MJ, Tergaonkar V. Long-Range Chromatin Interactions Drive Mutant TERT Promoter Activation. *Cancer Discov* 2016;**6**: 1276-91.

151. Huang FW, Bielski CM, Rinne ML, Hahn WC, Sellers WR, Stegmeier F, Garraway LA, Kryukov GV. TERT promoter mutations and monoallelic activation of TERT in cancer. *Oncogenesis* 2015;**4**: e176.

152. Mancini A, Xavier-Magalhães A, Woods WS, Nguyen KT, Amen AM, Hayes JL, Fellmann C, Gapinske M, McKinney AM, Hong C, Jones LE, Walsh KM, et al. Disruption of the β1L Isoform of GABP Reverses Glioblastoma Replicative Immortality in a TERT Promoter Mutation-Dependent Manner. *Cancer cell* 2018;**34**: 513-28.e8.

153. Amen AM, Fellmann C, Soczek KM, Ren SM, Lew RJ, Knott GJ, Park JE, McKinney AM, Mancini A, Doudna JA, Costello JF. Cancer-specific loss of TERT activation sensitizes glioblastoma to DNA damage. *Proceedings of the National Academy of Sciences of the United States of America* 2021;**118**.

154. Bullock M, Lim G, Zhu Y, Åberg H, Kurdyukov S, Clifton-Bligh R. ETS Factor ETV5 Activates the Mutant Telomerase Reverse Transcriptase Promoter in Thyroid Cancer. *Thyroid* 2019;**29**: 1623-33.

155. Li Y, Zhou QL, Sun W, Chandrasekharan P, Cheng HS, Ying Z, Lakshmanan M, Raju A, Tenen DG, Cheng SY, Chuang KH, Li J, et al. Non-canonical NF-κB signalling and ETS1/2 cooperatively drive C250T mutant TERT promoter activation. *Nat Cell Biol* 2015;**17**: 1327-38.

156. Xu X, Li Y, Bharath SR, Ozturk MB, Bowler MW, Loo BZL, Tergaonkar V, Song H. Structural basis for reactivating the mutant TERT promoter by cooperative binding of p52 and ETS1. *Nature communications* 2018;**9**: 3183.

157. Monsen RC, DeLeeuw L, Dean WL, Gray RD, Sabo TM, Chakravarthy S, Chaires JB, Trent JO. The hTERT core promoter forms three parallel G-quadruplexes. *Nucleic acids research* 2020;**48**: 5720-34.

158. Kang HJ, Cui Y, Yin H, Scheid A, Hendricks WPD, Schmidt J, Sekulic A, Kong D, Trent JM, Gokhale V, Mao H, Hurley LH. A Pharmacological Chaperone Molecule Induces Cancer Cell Death by Restoring Tertiary DNA Structures in Mutant hTERT Promoters. *J Am Chem Soc* 2016;**138**: 13673-92.

159. Sengupta A, Roy SS, Chowdhury S. Non-duplex G-Quadruplex DNA Structure: A Developing Story from Predicted Sequences to DNA Structure-Dependent Epigenetics and Beyond. *Acc Chem Res* 2021;**54**: 46-56.

160. Sharma S, Mukherjee AK, Roy SS, Bagri S, Lier S, Verma M, Sengupta A, Kumar M, Nesse G, Pandey DP, Chowdhury S. Human telomerase is directly regulated by non-telomeric TRF2-G-quadruplex interaction. *Cell Rep* 2021;**35**: 109154.

161. Demanelis K, Jasmine F, Chen LS, Chernoff M, Tong L, Delgado D, Zhang C, Shinkle J, Sabarinathan M, Lin H, Ramirez E, Oliva M, et al. Determinants of telomere length across human tissues. *Science (New York, NY)* 2020;**369**.

162. Rachakonda S, Kong H, Srinivas N, Garcia-Casado Z, Requena C, Fallah M, Heidenreich B, Planelles D, Traves V, Schadendorf D, Nagore E, Kumar R. Telomere length, telomerase reverse transcriptase promoter mutations, and melanoma risk. *Genes, chromosomes & cancer* 2018;**57**: 564-72.

163. Blasco MA. Telomeres and human disease: ageing, cancer and beyond. *Nat Rev Genet* 2005;**6**: 611-22.

164. Zhang Y, Shen J, Ming W, Lee YP, Santella RM. Telomere length in hepatocellular carcinoma and paired adjacent non-tumor tissues by quantitative PCR. *Cancer Invest* 2007;**25**: 668-77.

165. Meeker AK, Hicks JL, Iacobuzio-Donahue CA, Montgomery EA, Westra WH, Chan TY, Ronnett BM, De Marzo AM. Telomere length abnormalities occur early in the initiation of epithelial carcinogenesis. *Clinical cancer research : an official journal of the American Association for Cancer Research* 2004;**10**: 3317-26.

166. Hirashima K, Migita T, Sato S, Muramatsu Y, Ishikawa Y, Seimiya H. Telomere length influences cancer cell differentiation in vivo. *Mol Cell Biol* 2013;**33**: 2988-95.

167. Liu T, Wang N, Cao J, Sofiadis A, Dinets A, Zedenius J, Larsson C, Xu D. The age- and shorter telomere-dependent TERT promoter mutation in follicular thyroid cell-derived carcinomas. *Oncogene* 2014;**33**: 4978-84.

168. Ceccarelli M, Barthel FP, Malta TM, Sabedot TS, Salama SR, Murray BA, Morozova O, Newton Y, Radenbaugh A, Pagnotta SM, Anjum S, Wang J, et al. Molecular Profiling Reveals Biologically Discrete Subsets and Pathways of Progression in Diffuse Glioma. *Cell* 2016;**164**: 550-63.

169. Mitchell TJ, Turajlic S, Rowan A, Nicol D, Farmery JHR, O'Brien T, Martincorena I, Tarpey P, Angelopoulos N, Yates LR, Butler AP, Raine K, et al. Timing the Landmark Events in the Evolution of Clear Cell Renal Cell Cancer: TRACERx Renal. *Cell* 2018;**173**: 611-23.e17.

170. Hayward NK, Wilmott JS, Waddell N, Johansson PA, Field MA, Nones K, Patch AM, Kakavand H, Alexandrov LB, Burke H, Jakrot V, Kazakoff S, et al. Whole-genome landscapes of major melanoma subtypes. *Nature* 2017;**545**: 175-80.

171. Mason PJ, Perdigones N. Telomere biology and translational research. *Transl Res* 2013;**162**: 333-42.

172. Campbell PJ. Telomeres and cancer: from crisis to stability to crisis to stability. *Cell* 2012;**148**: 633-5.

173. Bhargava R, Fischer M, O'Sullivan RJ. Genome rearrangements associated with aberrant telomere maintenance. *Current opinion in genetics & development* 2020;**60**: 31-40.

174. Zeng H, Jorapur A, Shain AH, Lang UE, Torres R, Zhang Y, McNeal AS, Botton T, Lin J, Donne M, Bastian IN, Yu R, et al. Bi-allelic Loss of CDKN2A Initiates Melanoma Invasion via BRN2 Activation. *Cancer cell* 2018;**34**: 56-68.e9.

175. Haycock PC, Burgess S, Nounu A, Zheng J, Okoli GN, Bowden J, Wade KH, Timpson NJ, Evans DM, Willeit P, Aviv A, Gaunt TR, et al. Association Between Telomere Length and Risk of Cancer and Non-Neoplastic Diseases: A Mendelian Randomization Study. *JAMA oncology* 2017;**3**: 636-51.

176. Aviv A, Anderson JJ, Shay JW. Mutations, Cancer and the Telomere Length Paradox. *Trends Cancer* 2017;**3**: 253-8.

177. Lahouel K, Younes L, Danilova L, Giardiello FM, Hruban RH, Groopman J, Kinzler KW, Vogelstein B, Geman D, Tomasetti C. Revisiting the tumorigenesis timeline with a data-driven generative model. *Proceedings of the National Academy of Sciences of the United States of America* 2020;**117**: 857-64.

178. Tomasetti C, Li L, Vogelstein B. Stem cell divisions, somatic mutations, cancer etiology, and cancer prevention. *Science (New York, NY)* 2017;**355**: 1330-4.

179. Codd V, Wang Q, Allara E, Musicha C, Kaptoge S, Stoma S, Jiang T, Hamby SE, Braund PS, Bountziouka V, Budgeon CA, Denniff M, et al. Polygenic basis and biomedical consequences of telomere length variation. *medRxiv* 2021: 2021.03.23.21253516.

180. Vogelstein B, Papadopoulos N, Velculescu VE, Zhou S, Diaz LA, Jr., Kinzler KW. Cancer genome landscapes. *Science (New York, NY)* 2013;**339**: 1546-58.

181. Chen F, Zhang Y, Creighton CJ. Systematic identification of non-coding somatic single nucleotide variants associated with altered transcription and DNA methylation in adult and pediatric cancers. *NAR Cancer* 2021;**3**: zcab001.

182. Moore JE, Purcaro MJ, Pratt HE, Epstein CB, Shoresh N, Adrian J, Kawli T, Davis CA, Dobin A, Kaul R, Halow J, Van Nostrand EL, et al. Expanded encyclopaedias of DNA elements in the human and mouse genomes. *Nature* 2020;**583**: 699-710.

183. Snyder MP, Gingeras TR, Moore JE, Weng Z, Gerstein MB, Ren B, Hardison RC, Stamatoyannopoulos JA, Graveley BR, Feingold EA, Pazin MJ, Pagan M, et al. Perspectives on ENCODE. *Nature* 2020;**583**: 693-8.

184. Sur I, Taipale J. The role of enhancers in cancer. *Nat Rev Cancer* 2016;**16**: 483-93.

185. Rheinbay E, Parasuraman P, Grimsby J, Tiao G, Engreitz JM, Kim J, Lawrence MS, Taylor-Weiner A, Rodriguez-Cuevas S, Rosenberg M, Hess J, Stewart C, et al. Recurrent and functional regulatory mutations in breast cancer. *Nature* 2017;**547**: 55-60.

186. Weinhold N, Jacobsen A, Schultz N, Sander C, Lee W. Genome-wide analysis of noncoding regulatory mutations in cancer. *Nature genetics* 2014;**46**: 1160-5.

187. Fredriksson NJ, Ny L, Nilsson JA, Larsson E. Systematic analysis of noncoding somatic mutations and gene expression alterations across 14 tumor types. *Nature genetics* 2014;**46**: 1258-63.

188. Mansour MR, Abraham BJ, Anders L, Berezovskaya A, Gutierrez A, Durbin AD, Etchin J, Lawton L, Sallan SE, Silverman LB, Loh ML, Hunger SP, et al. Oncogene regulation. An oncogenic super-enhancer formed through somatic mutation of a noncoding intergenic element. *Science (New York, NY)* 2014;**346**: 1373-7.

189. Giunta S. Decoding human cancer with whole genome sequencing: a review of PCAWG Project studies published in February 2020. *Cancer Metastasis Rev* 2021.

190. Renaud S, Loukinov D, Abdullaev Z, Guilleret I, Bosman FT, Lobanenkov V, Benhattar J. Dual role of DNA methylation inside and outside of CTCF-binding regions in the transcriptional regulation of the telomerase hTERT gene. *Nucleic acids research* 2007;**35**: 1245-56.

191. Makowski MM, Willems E, Fang J, Choi J, Zhang T, Jansen PW, Brown KM, Vermeulen M. An interaction proteomics survey of transcription factor binding at recurrent TERT promoter mutations. *Proteomics* 2016;**16**: 417-26.

192. Mercer KE, Pritchard CA. Raf proteins and cancer: B-Raf is identified as a mutational target. *Biochim Biophys Acta* 2003;**1653**: 25-40.

193. Dhomen N, Marais R. New insight into BRAF mutations in cancer. *Current opinion in genetics & development* 2007;**17**: 31-9.

194. Dhomen N, Reis-Filho JS, da Rocha Dias S, Hayward R, Savage K, Delmas V, Larue L, Pritchard C, Marais R. Oncogenic Braf induces melanocyte senescence and melanoma in mice. *Cancer cell* 2009;**15**: 294-303.

195. Desideri E, Cavallo AL, Baccarini M. Alike but Different: RAF Paralogs and Their Signaling Outputs. *Cell* 2015;**161**: 967-70.

196. Davies H, Bignell GR, Cox C, Stephens P, Edkins S, Clegg S, Teague J, Woffendin H, Garnett MJ, Bottomley W, Davis N, Dicks E, et al. Mutations of the BRAF gene in human cancer. *Nature* 2002;**417**: 949-54.

197. Wellbrock C, Karasarides M, Marais R. The RAF proteins take centre stage. *Nat Rev Mol Cell Biol* 2004;**5**: 875-85.

198. Rands CM, Meader S, Ponting CP, Lunter G. 8.2% of the Human genome is constrained: variation in rates of turnover across functional element classes in the human lineage. *PLoS Genet* 2014;**10**: e1004525.

199. Doolittle WF. Is junk DNA bunk? A critique of ENCODE. *Proceedings of the National Academy of Sciences of the United States of America* 2013;**110**: 5294-300.

200. Doolittle WF, Brunet TDP. On causal roles and selected effects: our genome is mostly junk. *BMC Biol* 2017;**15**: 116.

201. Graur D. An Upper Limit on the Functional Fraction of the Human Genome. *Genome Biol Evol* 2017;**9**: 1880-5.

202. Galeota-Sprung B, Sniegowski P, Ewens W. Mutational Load and the Functional Fraction of the Human Genome. *Genome Biol Evol* 2020;**12**: 273-81.

203. Huang S. Reconciling Non-Genetic Plasticity with Somatic Evolution in Cancer. *Trends Cancer* 2021.

204. Vedelek B, Maddali AK, Davenova N, Vedelek V, Boros IM. TERT promoter alterations could provide a solution for Peto's paradox in rodents. *Scientific reports* 2020;**10**: 20815.

Legends to the figures

Figure 1. A schematic representation of the core *TERT* promoter. The mutations at -57, -124, and -146 bp positions from the ATG start site of the *TERT* gene create consensus binding motifs for ETS transcription factors. The -124 C>T and -146 C>T somatic mutations are marked in black the germline -57 >AC mutation in blue. The variant allele of a common T>C polymorphism represented by rs2853669 at -245 bp disrupts a preexisting non-canonical ETS2 binding site close to an E-box[2].

Figure 2. A. A schematic representation of the *de novo* binding sites for ETS transcription factors created by the mutations at the -124 and -146 bp sites on the *TERT* promoter. The two preexisting tandem ETS sites 30 and 53 bp from the two mutational sites at -124 and -146 bp, respectively, are required for cooperative binding of the GABP heterotetramer complex at the *de novo* sites[148]. **B.** Structure of the RAF proteins. A single mutation at V600 residue within the third conserved region (CR3) mimics activation of the two adjacent residues is sufficient to activate BRAF. The constitutively phosphorylated S445 residue and the phosphomimetic aspartic acid at the amino acid 448 eliminates the requirement for additional activating alterations needed for maximal activation of ARAF and CRAF paralogs[197].

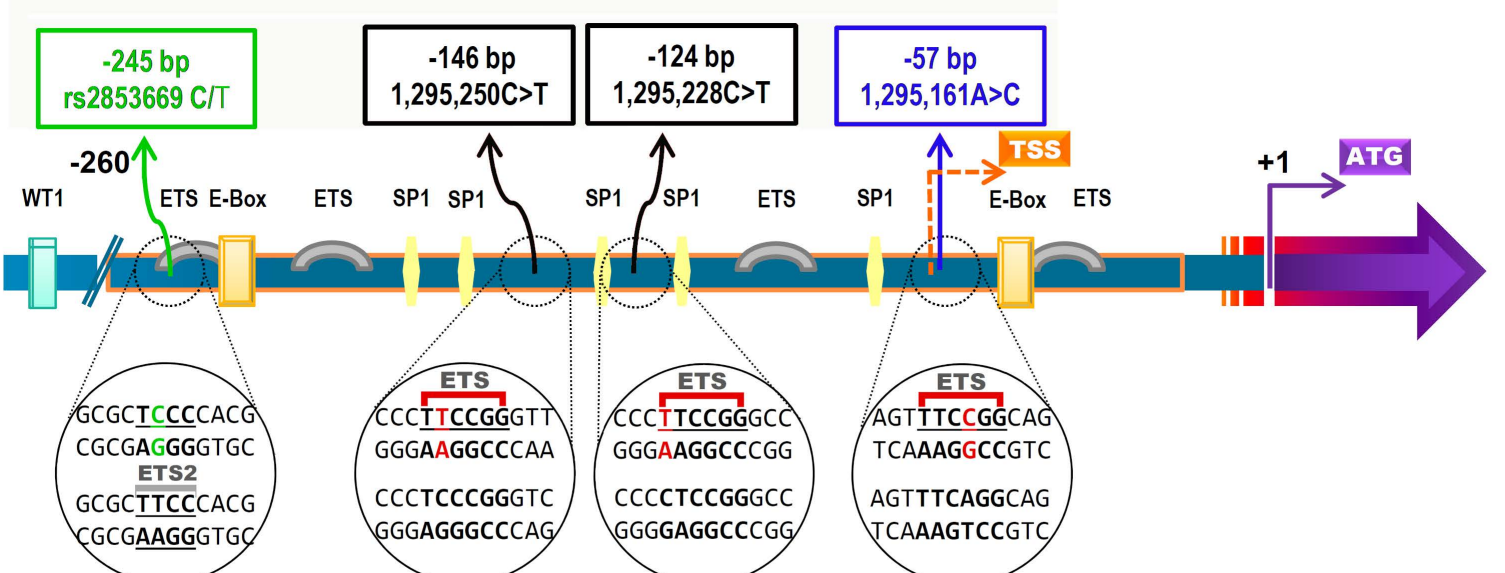
-245 bp
rs2853669 C/T
-146 bp
1,295,250C>T
-124 bp
1,295,228C>T
-57 bp
1,295,161A>C
-260
TSS
+1
ATG
WT1
ETS
E-Box
ETS
SP1
SP1
SP1
SP1
ETS
SP1
E-Box
ETS
GCGCTCCCCACG
CGCGAGGGGTGC
ETS2
GCGCTTCCCACG
CGCGAAGGGTGC
ETS
CCCTTCCGGGTT
GGGAAGGCCCAA
CCCTCCCGGGTC
GGGAGGGCCCAG
ETS
CCCTTCCGGGCC
GGGAAGGCCCGG
CCCCTCCGGGCC
GGGGAGGCCCGG
ETS
AGTTTCCGGCAG
TCAAAGGCCGTC
AGTTTCAGGCAG
TCAAAGTCCGTC

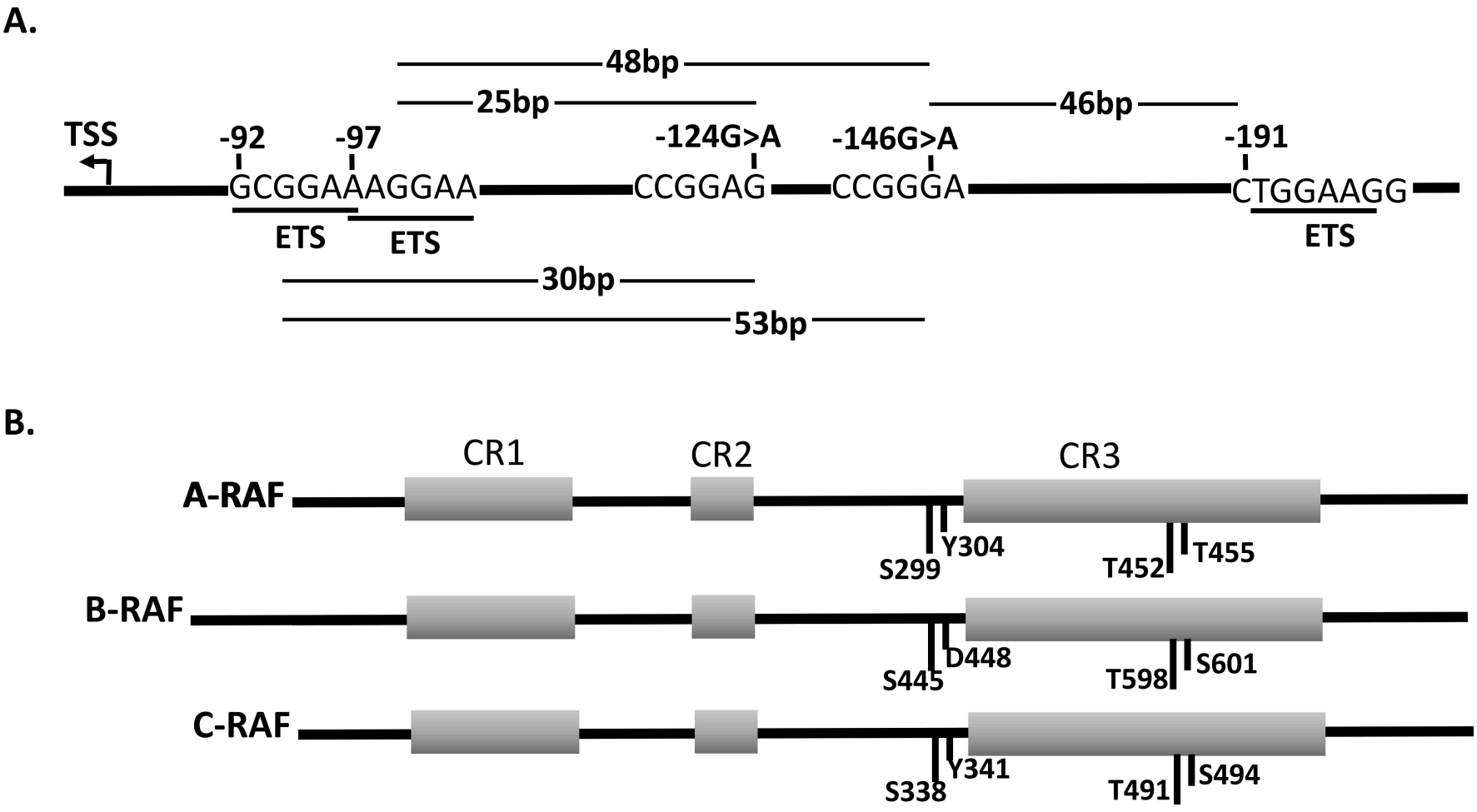
A.
48bp
25bp
46bp
TSS
-92
-97
-124G>A
-146G>A
-191
GCGGAAAGGAA
CCGGAG
CCGGGA
CTGGAAGG
ETS
ETS
ETS
30bp
53bp
B.
CR1
CR2
CR3
A-RAF
S299
Y304
T452
T455
B-RAF
S445
D448
T598
S601
C-RAF
S338
Y341
T491
S494