PiRATeMC: A highly flexible, scalable, and affordable system for obtaining high quality video recordings for behavioral neuroscience.

Authors: Samuel W. Centanni, PhD[1], Alexander C.W. Smith, PhD[2]*

[1]Department of Molecular Physiology & Biophysics, Vanderbilt University, Nashville, TN

[2]Nash Family Department of Neuroscience, Icahn School of Medicine at Mount Sinai, New York, NY

*Corresponding Author:
Alexander C.W. Smith, PhD
Icahn School of Medicine at Mount Sinai
1470 Madison Ave
Hess CSM S10-202
New York, NY, 10029

Abstract

With the recent development and rapidly accelerating adoption of machine-learning based rodent behavioral tracking tools such as DeepLabCut, one common variable that can impact the quality and consistency of results is the camera system. Many experimenters use webcams, GoPros, or other commercially available cameras that are not only relatively expensive, but offer very little flexibility over recording parameters. These cameras are not optimized for recording many types of behavioral experiments, which can lead to suboptimal video quality. Furthermore, it is a challenge, if not impossible, to synchronize multiple cameras with each other, or to send/receive a trigger with external signals such as a TTL pulse or a network connection. We have developed an affordable ecosystem of behavioral recording equipment, PiRATeMC (Pi-based Remote Acquisition Technology for Motion Capture), that relies on Raspberry Pi Camera Boards that are ideal for recording in both bright light, low light, and dark conditions under infrared light. PiRATeMC offers users control over nearly every recording parameter. This setup can easily be scaled up and synchronously controlled in clusters via a self-contained network to record a large number of simultaneous behavioral sessions without burdening institutional network infrastructure. Furthermore, the Raspberry Pi is an excellent platform for novice and inexperienced programmers interested in using an open-source recording system, with a large online community that is very active in developing novel open-source tools. Moreover, it easily interfaces with Arduinos and other microcontrollers, allowing simple synchronization and interfacing of video recording with nearly any behavioral equipment using GPIO pins to send or receive 3.3V or 5V signals, I2C, or serial communication.

INTRODUCTION

Preclinical studies have long relied on traditional predetermined activity patterns to assess behaviors such as affect, motivation, cognitive function, memory, motor coordination, etc. While these historical approaches have led to countless discoveries, the evolution of behavioral paradigms has yielded increasingly complex interpretations of the outcomes. Bias behavioral scoring overlooks potentially unique behaviors that may occur in specific groups or subgroups within experiments. Moreover, manual behavioral scoring is highly vulnerable to human error, biases, and inter-rater variability. Using unbiased pose estimation techniques with open-source machine learning-based software such as DeepLabCut[1, 2], and behavioral mapping or clustering analysis with programs such as B-SOID[3] or VAME[4] have begun to shift behavioral neuroscience into a new era of behavioral analysis and categorization. These techniques are able to segment behaviors in an unbiased way, and eliminate inconsistencies due to human error and inter-rater variability. To maximize the potential for these and other programs, high resolution cameras are essentially required, and more so, they must be able to interface with existing real-time controllers for other behavioral equipment, such as *in vivo* activity measurement equipment, or operant chambers.

Here we introduce PiRATeMC (Pi-based Remote Acquisition Technology for Motion Capture), an affordable, user-friendly, modular, open-source camera system that runs off of a Raspberry Pi (RPi) miniature computer and an accompanying 8-megapixel (MP) Camera Board (Sony IMX219 CMOS sensor). These cameras can record high quality video under either infrared (IR) or white light. Moreover, they offer far more flexibility in recording parameters than most commercially available camera system. The user can manually set recording parameters like frame size, frame rate (up to 120FPS), white-balance (crucial for high-quailty IR videos), brightness/contrast, ISO, saturation, bitrate, and many more (additional details below). Finally, the PiRATeMC system can easily be controlled remotely via *ssh* (remote secure shell) over a local area network (LAN), and clusters of cameras can be controlled synchronously with millisecond precision using ClusterSSH (easily installed via apt), allowing either multi-angle recording of single subjects (e.g. for 3D-DeepLabCut[5]), or an easy method of recording a large number of behavioral sessions simultaneously. We provide step-by-step instructions to physically assemble the camera and Raspberry Pi, as well as a cloned operating system (PiCamOS) that can be uploaded to an SSD card (source code for building PiCamOS is also available). Lastly, we describe a simple data management pipeline, whereby with minimal user modification of PiCamOS, a large number of RPiCams can be controlled simultaneously, and deposit all recorded videos in the same 'sink' directory on a remote local network (LAN) host. The goal of this paper is to provide an easily obtainable recording system that is highly flexible in recording parameters, can interface with numerous real-time equipment controllers and other open-source analysis software, and can easily be scaled up to record a large number of videos synchronously. Increasing accessibility and usability of acquisition

and analysis programs for assessing rodent behavior has the potential to provide a wealth of new behavioral data that may have been overlooked using traditional approaches.

METHODS

Note that any text highlighted in grey below represents inputs or outputs from the Linux terminal, and is case-sensitive.

Camera Assembly

Raspberry Pis (RPis) are single-board computers that run a full Linux operating system (Raspbian), and thus offer greater computational capabilities than other single-board computing devices such as Arduinos. For a simple recording setup, we recommend using the RPi 3 Model B+, as this model is the last to have a standard HDMI output port and micro-USB charger. RPi 4 and newer can certainly be used, however newer models only have micro-HDMI output, and a USB-C power input, which likely necessitates purchase of additional adapters. There are two options for 8MP camera boards that connect to the RPi camera interface: a NoIR Camera Board, and a standard Camera Board v2. The naming of these cameras is not intuitive, the NoIR camera is the camera that is sensitive to infrared light, (i.e., does not have an IR filter), but may produce lower quality videos under white light. If you only plan to record experiments under white light, the standard Camera Board v2 is recommended, as an IR filter will enhance video quality under white light. In order to set up a single camera, the minimal parts required are listed in **Table 1**. Note that only one of the two camera options (NoIR or standard) is necessary, and these cameras do come with a Flex Cable, however the stock cable is only 6” long, so while a longer Flex Cable is not absolutely necessary, we consider a longer flex cable necessary equipment, and the price is very low.

Basic Camera Necessities:			
Part:	**Vendor (suggested):**	**Product #:**	**Price:**
Raspberry Pi 3 Model B+ (or newer)	Adafruit Industries, Newark Electronics	3775 (Adafruit), 49AC7637 (Newark),	$35.00
Raspberry Pi NoIR Camera Board v2 - 8MP	Adafruit Industries	3100	$29.95
Raspberry Pi Camera Board v2 - 8MP	Adafruit Industries	3099	
5V 2.5A Switching Power Supply with 20AWG MicroUSB Cable	Adafruit Industries	1995	$7.50
Kingston 32GB microSD card	CDW	5849358	$4.99
Flex Cable for Camera (various lengths available)	Adafruit Industries	1730	$2.50
		Total:	**$79.94**

Table 1. Parts List. This table contains the minimum essential parts to get started with one camera. Only one camera (either NoIR or standard camera board) is needed. For mixed dark/white light use, we recommend the NoIR camera. For a full list of optional parts/accessories, as well as notes about each component, see **Supplemental Table 1.**

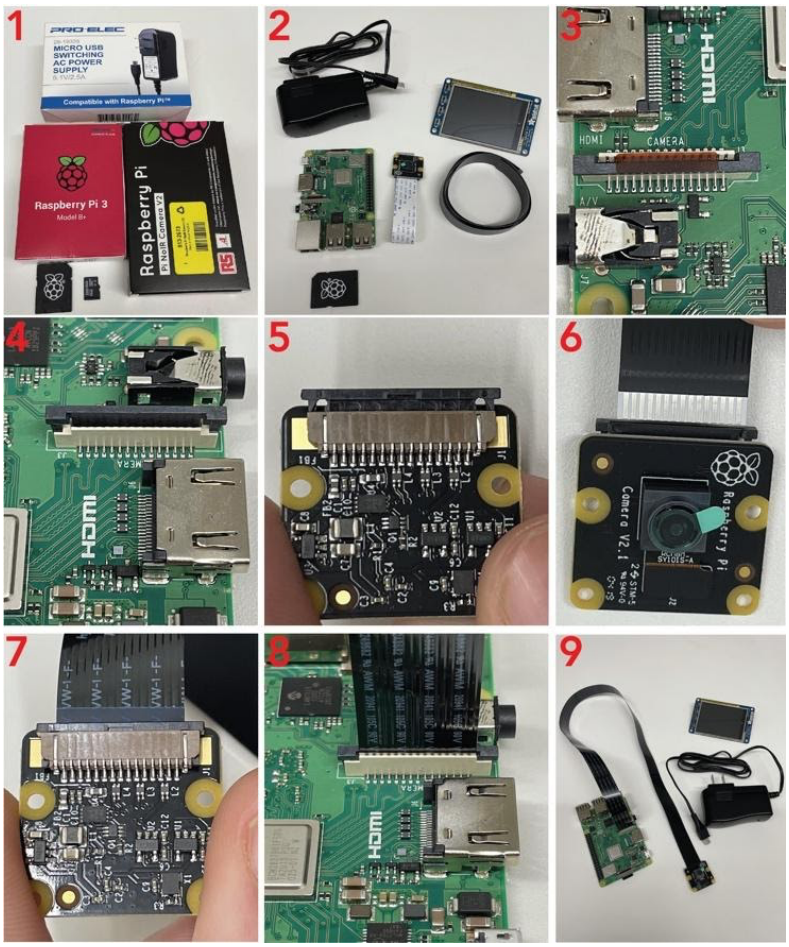

Figure 1. Attached the Camera to the Raspberry Pi. *Panel 1 shows the minimum parts needed for assembly. Panel 2 shows the unpackaged parts, as well as the optional 24" camera cable, and PiTFT touch screen (see Supp. Table 1 for details). The camera cable is attached at both ends by black clamps. Remove the plastic covering from the Pi (Panel 3), and gently lift the edges as shown in Panel 4. If you are replacing the stock camera cable with a longer cable (recommended), optionally do the same to the clamp on the camera, and remove the cable as shown in Panel 5. To attach a new camera cable, the silver leads on the cable face the same direction as the lens (Panel 6). Insert the cable all the way into the camera, then gently press the clamps back down (Panel 7). Follow the same procedure to insert the new cable into the camera port on the Pi, with the silver leads facing away from the clamp (towards the HDMI port on Pi 3), then gently press down on the edges to secure the cable in place. Panel 9 shows an assembled Pi with a 24" camera cable.*

Once the required parts have been gathered, assembly is very easy. First, replace the stock 6" camera cable with a longer one with a length of your choice (we use 24" for recording inside operant chambers). When inserting flex cables, the silver leads of the cable always face away from the slider clamp that secures the cable in place, on both the camera and the RPi. Instructions and example photos for attaching the camera to the RPi are shown in **Figure 1.**

<u>Remote Controller Hardware Configuration</u>

While RPis can be connected to a keyboard and monitor and operated as standalone computers, the most convenient way to control the cameras is via a remote secure shell (SSH) connection. This allows the RPi to be controlled from a remote computer (referred to here as the 'remote controller') connected to the same network as the RPi, and the remote controller can also serve as a data sink where videos are automatically transferred after recording. Because the RPi operating system is a Linux distribution (Raspbian), it is most convenient if the remote controller is also running a UNIX-based operating system (Mac OSX, Ubuntu, or any Linux Distribution). Users that only have

Windows PCs available should use a Bash emulator such as Git Bash (https://gitforwindows.org/), which will allow use of all terminal commands described for UNIX based operating systems below (see Supplemental Material - Notes for Windows Users for details). If you plan to scale up the number of RPis and cameras for larger experiments, we recommend using a mini-PC such as the AWOW MiniPC running Ubuntu 18.04 or later (see **Supplemental Table 1** for product details). Because many institutional IT departments prohibit use of network switches, the remote controller should have at least a dual-port network adapter card, as transmitting video data over WiFi is orders of magnitude slower. This will allow the user to maintain connectivity to the internet and backbone institutional LAN on the remote controller using one network port, and also to configure the remote controller to act as a DHCP server, creating its own LAN to manage the RPis. Detailed instructions for this process are at https://github.com/alexcwsmith/PiRATeMC/tree/master/docs/networking. A network switch can then be connected to the second port, allowing the remote controller to assign and manage IP addresses to any RPis connected to the switch, without the RPis having access to the main institutional network. Thus, PiRATeMC does not pose any security risk at hospitals/ university medical centers and other institutions where security is a significant concern. Detailed instructions for configuring this network are provided in supplemental materials, and an instructional walk-through video can be found in the documentation in the GitHub repo linked above. The packages that need to be installed (via sudo apt install) on the remote controller are: *openssh-server, clusterssh, isc-dhcp-server, bind9*. Before beginning any reconfiguration, users should connect the remote controller to the institutional backbone network, and enter ip a s into a terminal, and record the information there (or write to a plain text file with echo $(ip a s) > ipas.txt), and also create backups of the files at: /etc/netplan/*.yaml and /etc/dhcp/dhcpclient.conf, and also record the institutional network's default network settings (see **Figure 3** for an example of what network settings to record prior to making changes; this is a critical point). Users planning to record videos with only one camera should not have an issue connecting to the institutional network without an intermediate network switch, or in the simplest use case, can connect a PiTFT Touch Screen (add on accessory, see **Supplemental Table 1**) or monitor and a keyboard directly to the RPi and record videos locally without any network connectivity.

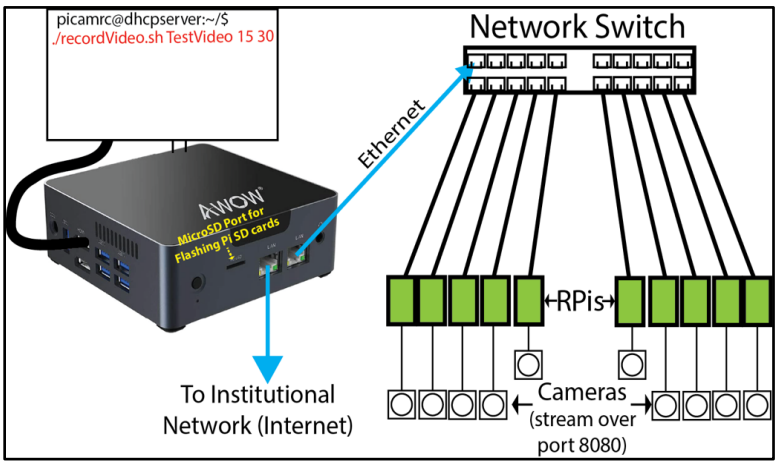

Figure 2. Schematic showing infrastructure for creating isolated LAN separate from main institutional network to allow using an affordable network switch to manage clusters of PiRATeMC Cameras.

Software Configuration

Two versions of pre-configured and fully functional cloned disk images of the PiRATeMC operating system are available to download from Google Drive (along with other resources) at: https://tinyurl.com/jaaeu8s2. The 'standalone' version is optimally suited for users who want to use a single camera and are able to directly connect the RPi to their institutional LAN, or who will use an RPi without a remote connection. The 'cluster' version is optimized for users who want to build clusters of cameras to record a large number of behavioral sessions simultaneously using a network switch and an isolated LAN. The source code for these operating systems, and documentation is available on GitHub at https://github.com/alexcwsmith/PiRATeMC. To flash the operating system onto the SD card that will be used as the storage drive of the RPi, use rpi-imager, available for download at https://www.raspberrypi.org/software/, or by typing: sudo apt install rpi-imager into a Linux terminal. We have created a video showing detailed steps for writing PiCamOS to the SD card, on our system this process takes ~3 minutes, you can find this video here: https://youtu.be/Ier37fRuUos. PiCamOS is a modified version of Raspbian Buster, and comes pre-installed with drivers for the PiTFT Resistive Touch Screen, and the UV4L video streaming service and WebRTC. PiCamOS also has pre-installed shell scripts for logging IP addresses to the remote controller at startup (sendIP.sh), and for recording videos with highly flexible parameters (recordVideo.sh).

After flashing PiCamOS to the SD card, it will be automatically unmounted/ejected. Before placing the SD card into the RPi, re-mount it into the remote controller, and navigate to the folder /rootfs/home/pi/. On Raspbian (and all UNIX-based operating systems), any file names that start with '.' are hidden files, so make sure that hidden files are viewable (Ctrl+h on Linux, Cmd+Shift+. on Mac). Open the file '.bashrc' with either a GUI text editor (gedit or TextEdit), or with a terminal text editor like *nano* or *vim* by typing into the terminal: nano .bashrc. This .bashrc file is a type of configuration script (equivalent to .bash_profile on Mac OSX) that is run every time a new terminal is opened, and defines system variables, runs startup scripts, or performs other tasks to initialize a user session. Near the top of this file you will see four lines beginning with 'export' that define system variables:

1) export REMOTEPATH=rpicam@10.1.1.243
    a) This is the username & IP address to an account on the remote controller computer that also serves as a 'data sink'. This information will be used for automatically transferring recorded videos rom the source (RPi) to the sink (remote controller).
2) export REMOTEPASS=$(cat .pass_file)
    a) This variable reads the password to the REMOTEPATH account from another hidden file in the /home/pi/ directory, called .pass_file. Note in a graphical interface the .pass_file command will appear locked, and is only viewable by the file owner or the system root. In

order to edit the contents of this file, either open it with 'sudo nano .pass_file' in a terminal, or as an administrator on Windows.

3) export REMOTELOGPATH=$HOME/RPi_Sessions/
    a) Path to a directory on the remote controller to write log files upon RPi startup.
4) export REMOTEVIDPATH=/d1/studies/Raspicam/
    a) Path to a directory on remote computer to store recorded video files.

After these variables have been set, plug the RPi into an ethernet port, either on a network switch if running in a cluster, or directly if running on a main institutional backbone network. If everything is configured correctly, shortly after powering on, the RPi will transmit a log file to the directory set in $REMOTELOGPATH above. If running in a cluster, typing dhcp-lease-list on the remote controller will output a list of connected RPis and their IP addresses. You can then access the RPi from a terminal on the remote controller via ssh pi@ip.address (the default password is raspberry).

RESULTS

Recording or Streaming Video:

After the PiRATeMC hardware and software have been configured, and you are able to access the RPi through an SSH connection, you are nearly ready to begin recording or streaming videos. The first time you power on each RPi, the first command entered should be sudo raspi-config. This will bring you to a GUI configuration manager, where it is advised to change the password, the hostname (give each pi a distinct and recognizable hostname; for example we name each Pi according to the location and number of the operant chamber it will record in), and the localization/time zone settings. If you are based outside of the USA, it may be necessary to change the keyboard layout as well. There are several methods for recording or streaming videos.

Recording via recordVideo.sh script:

The recordVideo.sh script is the most powerful method for recording high-quality videos, as it offers the most flexibility of recording parameters. The usage for running this script is:

- ./recordVideo.sh <VideoName> <DurationInMinutes> <FramesPerSecond>

For example, ./recordVideo.sh TestVideo1 0.25 30 will record a 15-second video with 30 frames per second, and will be saved with filename TestVideo with the hostname and date appended to the filename, in a .mp4 format. This video will be stored locally on the Pi, and will also be automatically transferred to the location set in the $REMOTEVIDPATH variable above. Please note that videos will also be saved locally on the RPi, and should therefore be deleted regularly to avoid running out of storage. **This is critical**, as full storage will not prevent the recording from starting, only from saving at the end of the recording. To clear all videos from the Rpi, enter the command rm *mp4 while in the home folder. **Warning:** use caution with the rm command, as an accidental space between the * and

mp4 will delete the entire OS and you will have to reinstall. A safer, but more time-consuming way is to use the rm command with the exact filename (e.g., rm TestVideo1.mp4). To confirm the files are removed, use the command ls *.mp4. No files with an .mp4 extension should be present.

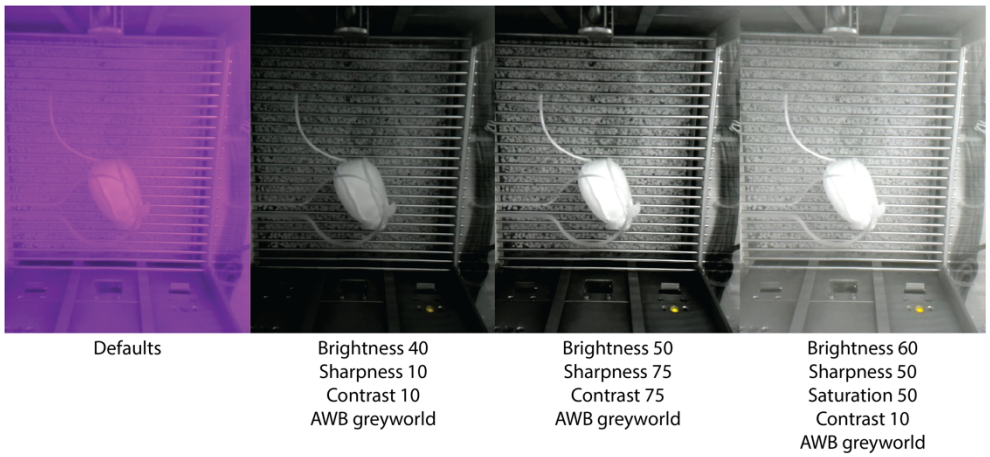

Figure 3. *Demonstration of the effect of different recording parameters on video quality under infrared light. Most obviously, setting the auto-white-balance (--awb option) to 'greyworld' is necessary for correcting for the red-shifted light from the infrared light source. Tuning brightness, saturation, sharpness, and contrast also have obvious effects on video quality. See Table 2 for the parameters we find most helpful, and Supplemental Table 2 for all available options.*

Table 2 shows some of the most useful recording parameters that can be manually set. To change these parameters, edit the recordVideo.sh script with nano recordVideo.sh, and parameters can be inserted in line 3 after the raspivid command. The impact of some of these recording parameters on video quality is shown in **Figure 3.** A caveat of the minimal setup we have described here is that the recordVideo.sh script does not easily allow simultaneous viewing of the video while it is being recorded. This can be remedied by attaching a 2.8" touchscreen to the RPi and running the command: sudo python3 ~/setupScripts/adafruit-pitft.py, and following the prompts. The final prompt of the setup process will ask "Would you like the console to appear on the screen?", and answering "No" to this will result on the video being displayed on the screen while it is recorded. Alternatively, a 7" display can be purchased and attached via a flex cable to the Display Port of the RPi, and this will display the stream while recording is ongoing. Part numbers for both options are provided in **Supplemental Table 1.** As a third option, the RPi can be plugged directly into a monitor via the HDMI port, and the monitor will display video while it is being recorded. We do not consider these options necessary, and they increase the price of each PiRATeMC unit by 2-3 fold, and in our experience while recording many videos simultaneously inside of operant boxes, there is no real need to be view the streams live, as videos are analyzed with DeepLabCut immediately following acquisition (potentially automatically in future versions, see discussion). A fourth option to view videos while recording is via online streaming with WebRTC (described in detail below). While this adds no additional cost, WebRTC offers far fewer parameters to change, and can cause inconsistent recordings (i.e., dropped frames).

Short form	**Long form**	**Explanation**
-?	--help	Help
-w	--width	Width of image (default 1920)

-h	--height	Height of image (default 1080)
-o	--output	Output filename
-fps	--framerate	Number of frames to record per second
-sh	--sharpness	Image sharpness (-100 to 100)
-co	--contrast	Image contrast (-100 to 100)
-br	--brightness	Image brightness (0 to 100)
-sa	--saturation	Image saturation (-100 to 100)
-awb	--awb	Set auto white balance (options= off, auto, sun, cloud, shade, tungsten, fluorescent, incandescent, flash, horizon, greyworld)

Table 2. *Abbreviated list of Raspivid commands that can be used in recordVideo.sh line 3 after raspivid.*

Streaming via UV4L:

You can also stream videos over the network from the remote controller (or any computer connected to the same network as the RPi) through port 8080 by opening your internet browser of choice, and entering the RPi IP address followed by :8080 into the address bar, e.g. 10.1.1.50:8080. This will take you to a UV4L Streaming Service configuration page shown in **Figure 4.**

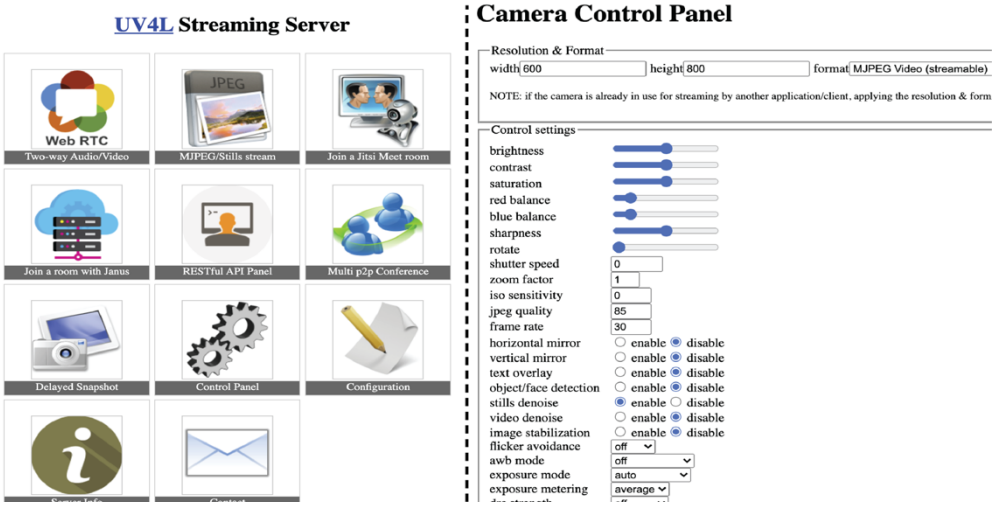

Figure 4. *UV4L Streaming Server Control Pages. The left side is the UV4L home page. On the right is the destination of the 'Control Panel' link. Clicking 'MJPEG/Stills stream' on the UV4L home page results in a live stream (not shown).*

The UV4L streaming service is ideal for optimizing recording parameters to use in the recordVideo.sh script, and for viewing the live stream while fixing cameras in place to optimally capture the field of view for behavioral equipment. However, the UV4L service does not offer a way to both view the live stream and record simultaneously, and it does not offer a way to synchronize multiple cameras. The UV4L driver also does not offer a 'greyworld' mode for the AWB setting, so video quality in these streams will not be as good as can be accomplished via the recordVideo.sh script. However, this does offer a powerful way to optimize camera position, and to test the effect of manipulating parameters such as brightness/contrast/saturation on video quality.

Streaming via WebRTC:

Similar to streaming via UV4L, you can also stream through an internet browser by entering an IP address followed by :8080/stream/webRTC/. This method does allow simultaneous recording and streaming, however it does not offer flexibility or tuning of recording parameters, and is more prone to dropped frames. Using this method, videos will be recorded and saved locally on whatever computer is running the web browser, not necessarily to the path saved as the data sink.

DISCUSSION

A major confound in behavioral neuroscience is the rigidity and inflexibility of many commercially available behavioral tracking software, in addition to the high costs of implementing these systems. Many programs require a specific type of camera, offer limited options for adjusting the image, and lack the adaptability to sync across other acquisition programs. Moreover, specific video file outputs require time consuming conversion software to analyze videos with external programs. Here we present an affordable, scalable, customizable, open source video recording configuration, PiRATeMC, that can be optimized for recording animal behavior in any setting. Setting up PiRATeMC requires very little programming/coding knowledge. Simply upload the software onto a microSD card, set four environment variables on the microSD card while inserted into a PC, insert it into the RPi and power on, and record videos. Video recording settings can then be modified to get very high quality videos of large behavioral arenas illuminated by either infrared light or white light. Unbiased behavioral mapping is becoming increasingly important and informative in neuroscience, and the output videos from PiRATeMC can be easily incorporated into widely used open-source analysis pipelines such as DeepLabCut, B-SOID, VAME, etc.

Setting up PiRATeMC requires very little programming and coding skills. Simply upload the software onto a microSD card, turn on the Raspberry Pi, adjust settings, and record videos. All of the steps can be completed using simple commands in Terminal, and we attempt to clearly state which parts of the pipeline require specifying the user's computer/network information. To provide support beyond this paper, we include links to a GitHub, YouTube tutorials, and webpages relevant to PiRATeMC. Accordingly, we present a ground level version of PiRATeMC, and encourage those with experience in Linux coding and Raspberry Pi computing to build more code into this pipeline as needed such as adding TTL outputs to the Raspberry Pi GPIO to trigger the start of an external optogenetics or photometry program, allowing for precise time locked videos. In addition, a logical next step for streamlining PiRATeMC is to convert the command line code into a unified Python code and/or a local graphical user interface (GUI) for an even more user friendly protocol.

Being able to easily record video of a large number of behavioral sessions simultaneously may usher in a new era of behavioral neuroscience analysis. In the field of drug addiction, we have been

studying self-administration for decades using lever-pressing or nose-poking as the only proxy of 'addictive-like behaviors'. By recording full behavioral sessions and analyzing the data with DeepLabCut and VAME, we have already begun to discover behavioral phenotypes that are highly predictive of an 'addiction score' that are not able to be detected by these standard behavioral metrics alone. Furthermore, behavioral neuroscience has long relied on human scoring and classification of behaviors, which suffers from serious confounding issues with inter-rater variability, the need for *a priori* knowledge of relevant behaviors to score, and capture of video data of high enough quality for accurate scoring. By using PiRATeMC in combination with machine-learning behavioral analysis, we address all three of these issues, and provide a method for unbiased, high-throughput behavioral analysis and classification.

We acknowledge that the use of this pipeline is still in its infancy and confounds still exist. First, PiRATeMC has only been validated using Linux and Mac operating systems and has not been tested using Windows. Another caveat is the difficulty in viewing the videos in real time while recording as alluded to above, although if this is required for behaviors without a predetermined timeline, either the 2.8" PiTFT touchscreen or 7" display can be used to view during recording with additional monetary cost, or the WebRTC platform can be used to view and record videos simultaneously at the cost of flexibility of recording parameters and synchronization of recording parameters. We hope the open-source nature of this pipeline will encourage users to expand this pipeline into many more interfaces beyond those outlined here, and further refine PiRATeMC to be optimized for each lab's needs. Future editions of PiRATeMC will incorporate microcontrollers for closed-loop experiments (for example with optogenetic or MedAssociates equipment), and a streamlined data analysis pipeline whereby new video data is automatically detected and analyzed with a pre-set DeepLabCut model as soon as it finishes recording.

REFERENCES CITED

1. Mathis A*, et al.* DeepLabCut: markerless pose estimation of user-defined body parts with deep learning. *Nat Neurosci* **21**, 1281-1289 (2018).

2. Sehara K, Zimmer-Harwood P, Larkum ME, Sachdev RNS. Real-Time Closed-Loop Feedback in Behavioral Time Scales Using DeepLabCut. *eNeuro* **8**, (2021).

3. Hsu AI, EA Y. An Open Source Unsupervised Algorithm for Identification and Fast Prediction of Behaviors. *bioRxiv*, (2021).

4. Luxem K, Fuhrmann F, Kürsch J, Remy S, P B. Identifying Behavioral Structure from Deep Variational Embeddings of Animal Motion. *bioRxiv*, (2020).

5. Nath T, Mathis A, Chen AC, Patel A, Bethge M, Mathis MW. Using DeepLabCut for 3D markerless pose estimation across species and behaviors. *Nat Protoc* **14**, 2152-2176 (2019).