Graph-based algorithms for phase-type distributions

Tobias Røikjer[1], Asger Hobolth[2] and Kasper Munch[3*]

1. Affiliation. Email: tobiasroikjer@gmail.com

2. Department of Mathematics, Aarhus University. Email: asger@math.au.dk

ORC-ID: 0000-0003-4056-1286

3. Bioinformatics Research Center, Aarhus University. Email: kaspermunch@birc.au.dk

ORC-ID: 0000-0003-2880-6252

*. Corresponding author

March 12, 2022

Statements and Declarations:
The authors did not receive support from any organization for the submitted work. The authors have no relevant financial or non-financial interests to disclose.

Abstract

Phase-type distributions model the time until absorption in continuous or discrete-time Markov chains on a finite state space. The multivariate phase-type distributions have diverse and important applications by modeling rewards accumulated at visited states. However, even moderately-sized state spaces make the traditional matrix-based equations computationally infeasible. State spaces of phase-type distributions are often very large but sparse, with only a few transitions from a state. This sparseness makes a graph-based representation of the phase-type distribution more natural and efficient than the traditional matrix-based representation. In this paper, we develop graph-based algorithms for analyses of phase-type distributions. In addition to algorithms for state-space construction, reward transformation, and moments calculation, we give algorithms for the marginal distribution functions of multivariate phase-type distributions and for the state probability vector of the underlying Markov chains of both time-homogeneous and time-inhomogeneous phase-type distributions. The algorithms are available as a numerically stable and memory-efficient open-source software package written in `C` named `ptdalgorithms`. This library exposes all methods in the programming languages `C` and `R`. We demonstrate with a classic problem from population genetics how `ptdalgorithms` serves as a much faster, much simpler, and completely general modeling alternative.

Key words: Phase-type distributions, computational statistics, moments, distribution, graph-based algorithms.

1 Introduction

A discrete phase-type distribution is the time until absorption in a discrete-time Markov chain on a finite state space. A (continuous) phase-type distribution is the time until absorption in a time-continuous Markov jump process on a finite state space. Phase-type distributions find many uses in statistical modeling, such as in physics, telecommunication, and queuing theory (e.g. Aalen (1995); Faddy and McClean (1999); Acal et al. (2019)). Recently, phase-type distributions have been applied in population genetics to model the coalescence process, which describes the genealogical relationship among DNA sequences (Hobolth et al., 2019). The solid theoretical foundation of phase-type distributions (e.g. Bladt and Nielsen (2017)) allows for elegant matrix-based formulations and mathematical proofs. However, computations using matrix-based formulations become infeasible even for systems with just thousands of states. One such example is the basic coalescence model (see Section 3 in (Hobolth et al., 2021)), where the number of states grows exponentially fast in the square root of the sample size.

In most models of real-world phenomena, states are sparsely connected, and a graph-based description is thus more natural and much more efficient than a matrix-based representation. In this article, we use a graph-based approach to develop efficient algorithms for computing the moments, probability distribution, state probability vector, and reward transformations for phase-type distributions. Working with phase-type distributions as graphs has several advantages. First, the state-space can be constructed iteratively, making it easy to build models for very complex phenomena. Second, as the phase-type distribution is not stored as a matrix, its representation requires much less memory. Third, the moments and distributions are computed orders of magnitude faster than using matrix operations. These advances are made by constructing algorithms for phase-type distributions that apply directly to the graph structure.

We present efficient graph-based algorithms for generalized iterative state-space construction, for reward transformation for positive or zero rewards, for computation of the exact marginal and joint moments of multivariate phase-type distributions, for computation of the distribution functions, and for computation of the state probability vector of the Markov process at any given time for both time-homogeneous and time-inhomogeneous distributions. The algorithms apply to both continuous and discrete phase-type distributions. The algorithms are written in `C` with methods exposed as an open-source library, named `ptdalgorithms`, in `C` and `R`. The library is available at GitHub and is easily installed and compiled using only this `R` code:

```
library(devtools)
devtools::install_github("TobiasRoikjer/PtDAlgorithms")
```

Here, we present the theoretical principles and probabilistic interpretation of our algorithms with brief code examples. The full documentation of the package is available at the GitHub website, and as `R` man pages of the `ptdalgorithms` `R` package.

2 Graph-based algorithms for phase-type distributions

2.1 Graph-representation of a phase-type distribution

In our matrix description of a continuous phase-type distributions, we follow Section 3 of Bladt and Nielsen (2017). We assume p transient states with the initial distribution α_i, $i = 1, \ldots, p$, with a potential defect $\alpha_0 = 1 - \sum_{i=1}^{p} \alpha_i$. Let $\boldsymbol{\alpha}$ be the vector of initial distribution with entries α_i.

The instantaneous sub-intensity matrix (the rate matrix excluding absorbing states) is denoted $\boldsymbol{S}$ and the Green matrix (the expected waiting time in state j if the Markov chain begins in state i) is $\boldsymbol{U} = (-\boldsymbol{S})^{-1}$. The cumulative distribution function is given by:

$$F_\tau(t) = 1 - \boldsymbol{\alpha} e^{\boldsymbol{S}t} \boldsymbol{e}, \;\; t \geq 0,$$

where $e^{\boldsymbol{S}t}$ is the matrix exponential of the matrix $\boldsymbol{S}t$.

In our description of phase-type distributions as a weighted directed graph, we follow the standard notation found in e.g. Frydenberg (1990); Younes and Simmons (2004). A directed graph G is a tuple $G = (V, E)$ where V is a set of vertices and E is a set of ordered pairs of vertices. An edge from a vertex $\mathtt{v} \in V$ to $\mathtt{z} \in V$ is denoted $(\mathtt{v} \to \mathtt{z}) \in E$. The set of edges $(\mathtt{v} \to \mathtt{z})$ for all $\mathtt{z} \in V$ are referred to as the out-going edges of $\mathtt{v}$ and the set of edges $(\mathtt{u} \to \mathtt{v})$ for all $\mathtt{u} \in V$ as the in-going edges of $\mathtt{v}$. For any pair of vertices connected by an edge $(\mathtt{u} \to \mathtt{v})$, $\mathtt{u}$ is referred to as a *parent* of $\mathtt{v}$, and $\mathtt{v}$ as a *child* of $\mathtt{u}$. The set of children of a vertex v is denoted $\mathtt{children}(\mathtt{v})$ and the set of parents is denoted $\mathtt{parents}(\mathtt{v})$. Note that, if the graph has cycles, a parent of a vertex may also be a child of the same vertex.

A *weighted* directed graph associates each edge with a real-valued weight function, $W \colon E \to \mathbb{R}$ that represent the transition rate between two states. The weight of an edge $(\mathtt{v} \to \mathtt{z}) \in E$ is denoted $w(\mathtt{v} \to \mathtt{z}) \in \mathbb{R}$ and the sum of weights of out-going edges for a vertex $\mathtt{v}$ is denoted:

$$\lambda_{\mathtt{v}} = \sum_{\mathtt{z} \in \mathtt{children}(\mathtt{v})} w(\mathtt{v} \to \mathtt{z}) \tag{1}$$

For a weighted directed graph to correspond to a valid phase-type distribution defined by the sub-intensity matrix, all weights are strictly positive real numbers corresponding to exponential or geometric rates. There can be no self-loops. A vertex with no outgoing edges must exist, representing an absorbing state. Finally, all vertices must have a path to an absorbing vertex with a strictly positive probability.

As the algorithms are iterative, we consider the graph to be mutable, and we can add vertices, add or remove edges, and change the weight of an edge. Notation-wise, we will often use a prime symbol to denote a transformation or change to a phase-type distribution or graph, i.e., G' would stem from the graph G with a list of transformations applied to it, and denote the updated graph. This update of G will be designated as $G \leftarrow G'$ in the algorithms.

2.2 State-space construction

We represent the state-space as an iteratively constructed graph. Iterative construction greatly simplifies the specification of large and complex state spaces because they can be specified from simple rules governing transitions between states. Our construction algorithm iteratively visits each vertex in the graph once and independently of any other vertices. The iterative construction is possible because of the Markov property of phase-type distributions: For any state, all outgoing transitions and their rate can be specified knowing only the current state. The construction algorithm is shown in Algorithm-2.1. An example state-space construction is shown in fig. 1 alongside an example of the `R` code needed to generate the state-space.

Our algorithm requires an efficient lookup data structure that represents a one-to-one bijection between a state and a vertex in the graph. In `ptdalgorithms` we use an AVL tree to map a state to a vertex. We use a vector of integers to describe each state, but any representation of a state with an equivalence relation and an ordering ($<$ relation) can be used.

While the algorithms are independent of the underlying data structure, the asymptotic complexities of the algorithms stated in this article assume that all children of a vertex `v` can be merged to all of its parents in quadratic time in the number of vertices, either by updating the weight of the edge or by adding a new edge from the parent to the child. This requires that the addition of new edges and updates of weight are both constant-time operations. In `ptdalgorithms`, we store the edges in an ordered linked list, and we can merge two ordered linked lists in linear time by comparing them element-wise in their sorted order. For $O(|V|)$ parents, we perform $O(|V|)$ merges each in time $O(2|V|)$, and therefore in quadratic time, where $|V|$ denotes the cardinality (number of entries) of the set V.

For modeling convenience, `ptdalgorithms` supports parametrization of edges, allowing edge weights to be updated after construction of the state space. This feature is useful for exploring the effect of different model parameter values (see `ptdalgorithms` documentation).

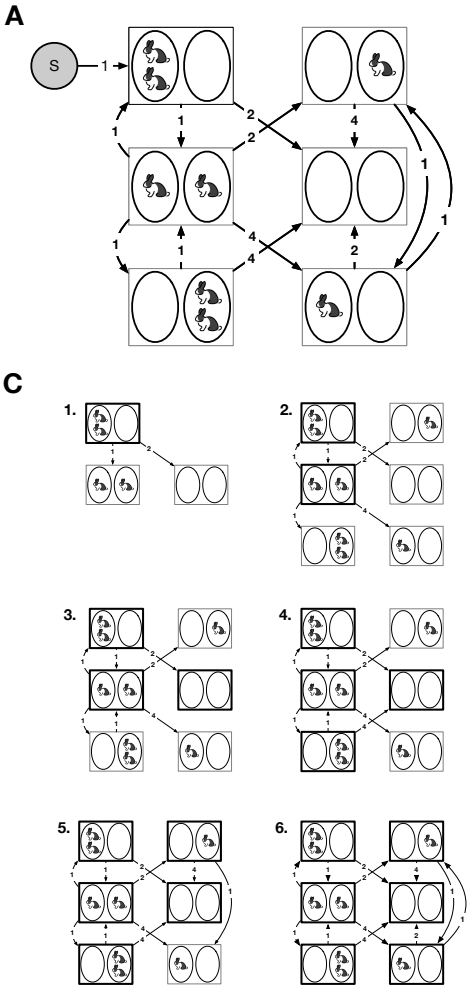

B

```
state_vector_length <- 2
graph <- create_graph(state_vector_length)
starting_vertex <- vertex_at(graph, 1)
initial_state <- c(2, 0)
add_edge(
  starting_vertex,
  create_vertex(graph, initial_state),
  1
)
index <- 2
while (index <= vertices_length(graph)) {
  vertex <- vertex_at(graph, index)
  state <- vertex$state
  if (state[1] > 0) {
     # Rabbit jump left to right
     child_state <- c(state[1] - 1, state[2] + 1)
     add_edge(
       vertex,
       find_or_create_vertex(graph, child_state),
       1
     )
     # Left island flooding
     child_state <- c(0, state[2])
     add_edge(
       vertex,
       find_or_create_vertex(graph, child_state),
       2
     )
  }
  if (state[2] > 0) {
     # Rabbit jump right to left
     child_state <- c(state[1] + 1, state[2] - 1)
     add_edge(
       vertex,
       find_or_create_vertex(graph, child_state),
       1
     )
     # Right island flooding
     child_state <- c(state[1], 0)
     add_edge(
       vertex,
       find_or_create_vertex(graph, child_state),
       4
     )
  }
  index <- index + 1
}
```

Figure 1: **Example state-space construction.** In this model, rabbits jump between two islands with a rate of 1. The two islands are flooded at rates 2 and 4, drowning all rabbits on the flooded island. The absorbing state is when all rabbits have drowned. **(A)** shows the state-space with transitions. **(B)** shows the `R` code that generates the state-space. States are encoded as vectors of two integers that represent the numbers of rabbits on each island. We iteratively construct the state-space by adding vertices and edges. Vertices are visited in the order they are added to the graph. We do not label absorbing states explicitly, as they are simply vertices with no outgoing edges. The special starting vertex goes to the initial state with two rabbits on the left island with a probability of 1. The graph keeps a record of its vertices and their matching state, and the function `find_or_create_vertex` only creates vertices for states that do not exist. **(C)** the state-space after each iteration of the `while` loop. The `index` variable enumerates the visited states shown with bold outline, while `vertices_length(graph)` returns the number of states currently added to the graph. Once these are equal, the state-space construction is completed.

Algorithm 2.1 General state-space generation algorithm

Let V be the set of vertices in the graph, `visited` be a subset of these vertices, and E be the set of edges in the graph. Let W be a function from $E \to \mathbb{R}$, the weights of the edges. Let f be a bijection between a state and a vertex by some data structure, and f^{-1} be the inverse function mapping from a vertex to a state. Denote the starting vertex as `S`. The following two functions are user defined: TRANSITIONS(`state`) returns the set of states that `state` can transition to. RATE(`state_from`, `state_to`) returns the transition rate from `state_from` to `state_to`.

```
function GenerateStateSpace(Transitions, Rate)
    V ← {S}
    unvisited ← {S}
    E ← ∅
    W ← ∅
    while unvisited ≠ ∅ do
        v ← any entry from unvisited
        unvisited ← unvisited \ {v}
        for state ∈ Transitions(f^{-1}(v)) do
            if f does not contain state then
                Add new vertex z
                V ← V ∪ {z}
                unvisited ← unvisited ∪ {z}
                f ← f ∪ {state ↦ z}
            end if
            z ← f(state)
            E ← E ∪ {(v → z)}
            W ← W ∪ {(v → z) ↦ Rate(f^{-1}(v), f^{-1}(z))}
        end for
    end while
    return Graph (V, E) and weight function W
end function
```

2.3 Reward transformation of a phase-type graph

We can assign a real-valued strictly positive or zero reward to each state, and the waiting time in each state is scaled with this reward. The phase-type distribution is no longer the time until absorption but rather the accumulated reward until absorption (eqn. 2). If all rewards assigned to all states are one, the phase-type distribution is unchanged. Let τ be a phase-type distributed stochastic variable with p transient states, $\tau \sim \mathrm{PH}_p(\boldsymbol{\alpha}, \boldsymbol{S})$, and let $\{X_t\}$ be the underlying Markov jump process. We are interested in the reward-transformed variable

$$Y = \int_0^\tau r(X_t)dt, \tag{2}$$

where $\boldsymbol{r} = (r(1), \ldots, r(p))$ is a vector of non-negative rewards. Theorem 3.1.33 in Bladt and Nielsen (2017) state that Y is also phase-type distributed, and they provide matrix formulas for computing the sub-intensity rate matrix of the reward-transformed variable. In this section we derive the corresponding graph-based construction.

Consider the reward-transformation where a strictly positive reward $r_k > 0$ is assigned to state k and where the rewards assigned to all other states remain unchanged, i.e. $r_i = 1$, $i \neq k$. The reward-transformed sub-intensity matrix is then obtained by scaling row k in the rate matrix by the inverse of r_k

$$\boldsymbol{S}' = \boldsymbol{S}\triangle(1/\boldsymbol{r}).$$

In the directed weighted graph, this corresponds to multiplying the weight of all outgoing edges from vertex k by $1/r_k$.

Now consider the alternative reward-transformation with a zero reward $r_k = 0$ assigned to only state k so that $r_i = 1$, $i \neq k$. In this case, we need to remove the vertex for state k from the graph and update the edges and their weights accordingly. The transition matrix of the Markov chain embedded in the graph has entries

$$q_{ij} = s_{ij}/\lambda_i, \quad i \neq j, \quad \text{and} \quad q_{ii} = 0,$$

where s_{ij} is the intensity from state i to j, represented by the weight of edge $(i \to j)$, and where λ_i is the sum of the out-going weights from i. The transition probability from state $i \neq k$ to state $j \neq k$ for the embedded Markov chain with state k removed is

$$p_{ij} = q_{ij} + q_{ik}q_{kj}.$$

The waiting time in each state of the reward-transformed Markov jump process must remain the same, and therefore the intensity from state i to state j must be $s'_{ij} = \lambda_i p_{ij}$. The sub-intensity matrix for the Markov jump process with state k removed therefore has entries

$$s'_{ij} = \lambda_i p_{ij} = \lambda_i(q_{ij} + q_{ik}q_{kj}) = s_{ij} + s_{ik}\frac{s_{kj}}{\lambda_k}.$$

In terms of graph-operations this means that if edge $(i \to j)$ already exists (if $s_{ij} > 0$), we should add $s_{ik}s_{kj}/\lambda_k$ to the weight of that edge. If the graph does not have edge $(i \to j)$ (if $s_{ij} = 0$), then we add it to the graph with weight $s_{ik}s_{kj}/\lambda_k$. The resulting algorithm is shown in Algorithm 2.2 and an example reward transformation is shown in Figure 2.

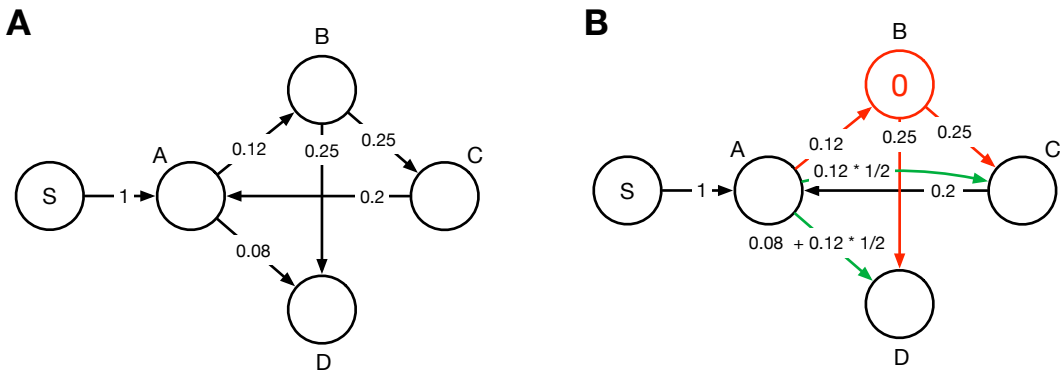

Figure 2: **Reward transformation with zero reward. (A)** Original graph. **(B)** Graph after reward transformation assigning a zero reward to state `B` and a 1 reward to states `A`, `C` and `D` in accordance with Algorithm 2.2. Red vertices and edges are removed in the transformation. Green edges are added or updated.

Algorithm 2.2 Reward transformation in a graph

```
function RewardTransformVertex(v)
    if v = S or v is absorbing then
        return
    end if
    if r(v) ≠ 0 then
        for z ∈ children(v) do
            Scale weight w(v → z) by 1/r(v)
        end for
    else
        for u ∈ parents(v) do
            Remove edge (u → v)
            for z ∈ children(v) do
                if edge (u → z) exists then
                    Increment weight w(u → z) by (w(v→z)/λ_v) w(u → v)
                else if u ≠ z then
                    Add edge (u → z) with weight (w(v→z)/λ_v) w(u → v)
                end if
            end for
        end for
    end if
end function
```

2.4 Moments

The higher-order moments of reward-transformed phase-type distributions are determined by matrix-based equations (e.g. Theorem 8.1.5, Bladt and Nielsen (2017))

$$\mathbb{E}[\tau^k] = k!\boldsymbol{\alpha}(\boldsymbol{U}\triangle(\boldsymbol{r}))^k\boldsymbol{e}.$$

The expectation is thus

$$\mathbb{E}[\tau] = \boldsymbol{\alpha}\boldsymbol{U}\triangle(\boldsymbol{r})\boldsymbol{e},$$

and the second moment is

$$\mathbb{E}[\tau^2] = 2\boldsymbol{\alpha}\boldsymbol{U}\triangle(\boldsymbol{r})\boldsymbol{U}\triangle(\boldsymbol{r})\boldsymbol{e}.$$

By the associative property of matrix multiplication, we can first compute the part $\triangle(\boldsymbol{r})\boldsymbol{U}\triangle(\boldsymbol{r})\boldsymbol{e}$, which gives us a column vector that we can write as $\triangle(\boldsymbol{r'})\boldsymbol{e}$. This implies that by using a different vector of rewards, the second moment can be computed the same way as the first moment. By induction, we find a new set of rewards such that:

$$\mathbb{E}[\tau^k] = \boldsymbol{\alpha}(k!\boldsymbol{U}\triangle(\boldsymbol{r}'))\boldsymbol{e} = \mathbb{E}[\tau'],$$

where τ' is a new phase-type distribution with the same state-space as τ, but with different rewards. For example, for the second moment, we can identify a new reward vector $\boldsymbol{r}'$ such that:

$$\mathbb{E}[\tau^2] = 2\boldsymbol{\alpha}\boldsymbol{U}\underbrace{\triangle(\boldsymbol{r})\boldsymbol{U}\triangle(\boldsymbol{r})\boldsymbol{e}}_{\triangle(\boldsymbol{r}')\boldsymbol{e}}.$$

In the sections below, we will use this property to construct an algorithm for all moments as well as an algorithm for all joint moments.

Any rewarded phase-type distribution can be normalized such that the intensities for each state sum to 1 by also adjusting the rewards for each state so that the reward divided by the total intensity remains the same. This normalization exposes the embedded Markov process and thus allows the expected accumulated reward at each state to be expressed simply as the expected number of visits to each state scaled by its reward.

In our graph-based formulation of rewarded phase-type distributions, both the reward and transition rate contribute to the weight of each edge. However, in normalizing the distribution, we need to associate all vertices $\mathtt{v} \in V$ with a separate scalar, $x_{\mathtt{v}}$, that represents the rescaled reward:

$$x_{\mathtt{v}} = \frac{1}{\lambda_{\mathtt{v}}}$$

Once the edge weights are rescaled to sum to 1:

$$w'(\mathtt{v} \to \mathtt{z}) = \frac{w(\mathtt{v} \to \mathtt{z})}{\lambda_{\mathtt{v}}},$$

the rescaled reward, $x_{\mathtt{v}}$, ensures that the accumulated reward remains the same. At the starting vertex and the absorbing vertices, x is set to 0.

Acyclic phase-type distributions often appear and constitute an important special case. For acyclic phase-type distributions (Cumani, 1982) the sub-intensity matrix can be reorganized into an upper triangular matrix. In our graph-formulation, the such graphs have a topological ordering, which allow us to compute the expectations by simple recursions. Let $\mathtt{v}$ and $\mathtt{z}$ be vertices and let

$\mathbb{E}[\tau|\mathtt{v}]$ be the expected accumulated reward until absorption given a start at the vertex $\mathtt{v}$. For the normalized graph, this gives us the recursion known from first-step analysis of Markov Chains:

$$\mathbb{E}[\tau|\mathtt{v}] = x_{\mathtt{v}} + \sum_{\mathtt{z}\in\text{children}(\mathtt{v})} w(\mathtt{v} \to \mathtt{z})\mathbb{E}[\tau|\mathtt{z}]$$

Since we have a single starting vertex, the expectation of the phase-type distribution is:

$$\mathbb{E}[\tau] = \mathbb{E}[\tau|\mathtt{S}]$$

The topological ordering of vertices allows the recursion to be computed using dynamic programming, and we can compute k'th moment in quadratic time in the number of vertices $O(|V|^2k)$. This is not possible if the state-space has cycles since the recursion will then not have an end. However, as we show below, we can transform the graph for any cyclic phase-type distribution into a graph for an acyclic phase-type distribution with the same states.

2.5 Constructing an acyclic graph representation

We can manipulate the graph for a cyclic phase-type distribution to produce a graph for an acyclic phase-type distribution with the same states in such a way that the expected time and accumulated rewards until absorption remain the same. Once constructed, we can compute the expectation recursively as described above. Algebraically, we find a phase-type distribution such that:

$$\boldsymbol{U}\triangle(\boldsymbol{r})\boldsymbol{e} = \boldsymbol{U'}\triangle(\boldsymbol{r'})\boldsymbol{e}$$

where $\boldsymbol{S'} = (-\boldsymbol{U'})^{-1}$ constitutes an upper-triangular matrix. This matrix can be found by Gaussian elimination of the system of linear equations expressed as $-\boldsymbol{S}\boldsymbol{e} = \triangle(\boldsymbol{r})\boldsymbol{e}$. Gaussian elimination of sparse matrices by graph theory is a well-studied problem. In `ptdalgorithms` we apply this technique directly on the graph. We will assume below that the phase-type distribution have been normalized as described above, as this allows for a probabilistic interpretation of graph manipulations.

We first index each vertex arbitrarily to $\{1, 2, \ldots, |V|\}$, with the constraint that the starting vertex with no in-going edges, $\mathtt{S}$, has index 1, and the absorbing vertices have the highest indices. The algorithm we will describe visits all vertices in indexing order. We refer to the transformed graph after visiting the vertex with index i as $G^{(i)}$, and the initial graph is therefore denoted $G^{(0)}$. The algorithm ensures three invariants for each vertex i visited:

1. The vertex has no in-going edges from a vertex with a higher index.
2. The expected accumulated rewards until absorption, starting at any vertex, is preserved
3. The sum of weights for all outgoing edges remains 1 (but 0 for the absorbing vertex).

Algebraically, this means that

$$\boldsymbol{U}^{(i+1)}\triangle(\boldsymbol{r}^{(i+1)})\boldsymbol{e} = \boldsymbol{U}^{(i)}\triangle(\boldsymbol{r}^{(i)})\boldsymbol{e}$$

where $\boldsymbol{U}^{(i)}$ is the Green matrix for the phase-type distribution given by the graph $G^{(i)}$, and $\boldsymbol{r}^{(i)}$ are new associated rewards. As i has no in-going edges from a vertex j where $j > i$, the graph has a topological ordering and is acyclic once all vertices have been visited. We will later show

that we only need to perform this relatively expensive computation once to compute any number of moments.

We first show how we can remove an in-going and an outgoing edge of a vertex without changing the expectation. Let $\mathtt{v}$ and $\mathtt{z}$ describe vertices, with an associated index. Let $\mathbb{E}[\tau|\mathtt{v}]$ be the expected accumulated reward until absorption given that we start at vertex $\mathtt{v}$. The recursion to compute this expectation, as described in section 2.4, applies but will not end for a graph with cycles.

$$\mathbb{E}[\tau|\mathtt{v}] = x_{\mathtt{v}} + \sum_{\mathtt{z}\in\text{children}(\mathtt{v})} w(\mathtt{v}\to\mathtt{z})\mathbb{E}[\tau|\mathtt{z}]$$

However, we can expand the recursion, bridging the immediate child:

$$\mathbb{E}[\tau|\mathtt{v}] = x_{\mathtt{v}} + \sum_{\mathtt{z}_1\in\text{children}(\mathtt{v})} w(\mathtt{v}\to\mathtt{z}_1)\left(x_{\mathtt{z}_1} + \sum_{\mathtt{z}_2\in\text{children}(\mathtt{z}_1)} w(\mathtt{z}_1\to\mathtt{z}_2)\mathbb{E}[\tau|\mathtt{z}_2]\right)$$

and produce the equivalent equation:

$$\mathbb{E}[\tau|\mathtt{v}] = \left(x_{\mathtt{v}} + \sum_{\mathtt{z}_1\in\text{children}(\mathtt{v})} w(\mathtt{v}\to\mathtt{z}_1)x_{\mathtt{z}_1}\right) + \sum_{\mathtt{z}_1\in\text{children}(\mathtt{v})}\left(\sum_{\mathtt{z}_2\in\text{children}(\mathtt{z}_1)} w(\mathtt{v}\to\mathtt{z}_1)w(\mathtt{z}_1\to\mathtt{z}_2)\mathbb{E}[\tau|\mathtt{z}_2]\right),$$

This reveals that we can remove the edge $(\mathtt{v}\to\mathtt{z}_1)$ without changing $\mathbb{E}[\tau|\mathtt{v}]$ if we increase the re-scaled reward $x_{\mathtt{v}}$ of $\mathtt{v}$ to $x_v + \sum_{\mathtt{z}_1\in\text{children}(\mathtt{v})} w(\mathtt{v}\to\mathtt{z}_1)x_{\mathtt{z}_1}$, and if weights of edges from $\mathtt{v}$ to all $\mathtt{z}_2 \in \text{children}(\mathtt{z}_1)$ are changed to $w(\mathtt{v}\to\mathtt{z}_1)w(\mathtt{z}_1\to\mathtt{z}_2)$. We can thus remove a vertex, $\mathtt{v}$, from a state-path if we increase the reward of any parents by the in-going weight multiplied by $x_{\mathtt{v}}$, and add or update edges from each parent to all children of $\mathtt{v}$ by the product of the edge weights.

In the situation where vertex v is also a child of vertex z, the above procedure would create a self-loop that needs to be resolved. We can remove a self-loop with weight $w(\mathtt{v}\to\mathtt{v})$ and retain the expectation if we increase the re-scaled reward, x_v to $x'_{\mathtt{v}} = x_{\mathtt{v}}/w(\mathtt{v}\to\mathtt{v})$, and scale all other out-going edges by $\frac{1}{1-w(\mathtt{v}\to\mathtt{v})}$.

By our three invariants, once we visit the vertex with index i, $\mathtt{v}_i$, all children of vertex $\mathtt{v}_i$ will have a higher index because all vertices with indexes lower than i have been visited. At this stage, not all parents of $\mathtt{v}_i$ have an index smaller than i, but redirecting edges from parents with a larger index establishes the three invariants at vertex i. From the equation above, the expected accumulated reward until absorption is kept, and by induction, we end up with an acyclic graph once all vertices are visited. The algorithm is shown in algorithm 2.3 and lets us build an acyclic graph in $O(|V|^3)$ time. A worked example of the algorithm is shown in fig. 3.

The algorithm can now compute the expected accumulated reward recursively using dynamic programming in $O(|V|^2)$ time on the acyclic graph. In `ptdalgorithms` we improve the empirical running time of the acyclic construction by indexing vertices by topological ordering if one exists or by some ordering by the strongly connected components. We show in the section below that we only need to construct the new acyclic graph once.

To see the correspondence between the acyclic graph construction and Gauss elimination, note how the system of equations $-\boldsymbol{S}\boldsymbol{e} = \triangle(\boldsymbol{r})\boldsymbol{e}$ corresponds to the example graph show in fig. 3 when

$$\boldsymbol{S} = \begin{bmatrix} -1 & 0.6 & 0 \\ 0 & -1 & 0.5 \\ 1 & 0 & 0 \end{bmatrix}$$

and $\boldsymbol{r} = (5, 2, 5)$. We can write the system of equations as:

$$
\begin{aligned}
T_{\mathtt{A}} &= 5 + 0.6 \cdot T_{\mathtt{B}} \\
T_{\mathtt{B}} &= 2 + 0.5 \cdot T_{\mathtt{C}} \\
T_{\mathtt{C}} &= 5 + T_{\mathtt{A}}
\end{aligned}
$$

where $T_{\mathtt{A}} = \mathbb{E}[\tau|\mathtt{A}]$ is the expectation starting in state $\mathtt{A}$ and similarly for $T_{\mathtt{B}}$ and $T_{\mathtt{B}}$. The zero expectation starting at the absorbing state, $T_{\mathtt{D}}$, does not appear in the equations. Gauss elimination makes use of three different operations: The first is "Swap positions of rows". In our algorithm the appropriate ordering is maintained by visiting vertices in index order. The second is "Add to one row a scalar multiple of another" (insert one equation in another). This corresponds to the graph operations removing an edge to a parent with higher index. E.g., in fig. 3 step 1., the removal of edge ($\mathtt{C} \to \mathtt{A}$) and updates of edges ($\mathtt{C} \to \mathtt{B}$) and ($\mathtt{C} \to \mathtt{D}$) corresponds to inserting the first equation in the third. The third operation is "Multiply a row by a non-zero scalar" (remove multiple instances of a variable in an equation). This corresponds to the graph operations removing a self-loop. E.g., in fig. 3 step 4., the removal of self-loop ($\mathtt{C} \to \mathtt{C}$) and update of edge ($\mathtt{C} \to \mathtt{D}$) corresponds to isolating T_C in the equation $T_{\mathtt{C}} = 11.2 + 0.3 \cdot T_{\mathtt{C}}$. Once all vertices have been visited and the graph is acyclic, the system has an upper triangular form:

$$
\begin{aligned}
T_{\mathtt{A}} &= 5 + 0.6 \cdot T_{\mathtt{B}} \\
T_{\mathtt{B}} &= 2 + 0.5 \cdot T_{\mathtt{C}} \\
T_{\mathtt{C}} &= 16,
\end{aligned}
$$

and can be solved by back-substitution. This is done by recursion in topological order on graph at the end of algorithm 2.3.

2.6 Computing higher-order moments in quadratic time

Identifying the operations required to convert a cyclic graph to an acyclic one with the same expected rewards until absorption is $O(|V|^3)$ in complexity but only $O(|V|^2)$ updates of the scalars x are required. The edge-weights of the resulting acyclic graph are independent of rewards. This means that once the normalized acyclic graph is constructed and its edge weights are known, it can be re-constructed for an alternative set of rewards using only $O(|V|^2)$ updates of scalars x. Because higher-order moments of phase-type distributions are just expectations with different rewards, as described above, this property allows us to compute any number of moments in $O(|V|^2)$ time.

In the conversion to an acyclic graph, scalars x associated with vertices are updated in a series of increments. In the implementation of algorithm algorithm 2.3, we save this list of updates rather than applying them directly. The resulting list of update functions is at most $O(|V|^2)$ long as we visit each vertex at most once and update the scalars of at most $|V|$ parents. In our implementation of algorithm 2.3, we similarly save the update functions producing the initial rescaled rewards x for the normalized phase-type distribution and the update functions used to compute the expectation on the acyclic graph using dynamic programming (both $O(|V|^2)$ long). From this list of instructions, the expectation can be computed in $O(|V|^2)$ time. The acyclic graph and list of update functions is only created the first time the user calls a moment function in the `ptdalgorithms` library. All subsequent moment computations run in $O(|V|^2)$ time.

2.7 Multivariate distributions

Instead of assigning a single real-valued reward for each state, we can assign a vector of real-valued rewards for each state. The outcome of the phase-type distribution is now a vector of positive real numbers. Such a distribution is described in Chapter 8 of Bladt and Nielsen (2017) as the multivariate phase-type distribution and is defined as:

$$\boldsymbol{Y} \sim \mathrm{MPH}^*(\boldsymbol{\alpha}, \boldsymbol{S}, \boldsymbol{R}),$$

where $\boldsymbol{R}$ is now a matrix of rewards, such that each row is the accumulated reward earned at the state with that index. A single column of $\boldsymbol{R}$ represents a univariate phase-type distribution as described above. This means that the marginal moments of a multivariate phase-type distribution, Y_j, can be computed using the graph algorithms already described and still requires only a single computation of the acyclic graph.

The joint distribution of a multivariate phase-type distribution represents the conditional outcome of marginal phase-type distributions. Joint moments are also well defined as matrix-based formulations (Theorem 8.1.5 Bladt and Nielsen (2017)), and e.g., the first cross-moment is:

$$\mathbb{E}[Y_i Y_j] = \boldsymbol{\alpha}\boldsymbol{U}(\boldsymbol{R}_{\cdot i})\boldsymbol{U}(\boldsymbol{R}_{\cdot j})\boldsymbol{e} + \boldsymbol{\alpha}\boldsymbol{U}(\boldsymbol{R}_{\cdot j})\boldsymbol{U}(\boldsymbol{R}_{\cdot i})\boldsymbol{e}$$

and thereby the covariance is

$$\mathbb{C}ov(Y_i, Y_j) = \boldsymbol{\alpha}\boldsymbol{U}(\boldsymbol{R}_{\cdot i})\boldsymbol{U}(\boldsymbol{R}_{\cdot j})\boldsymbol{e} + \boldsymbol{\alpha}\boldsymbol{U}(\boldsymbol{R}_{\cdot j})\boldsymbol{U}(\boldsymbol{R}_{\cdot i})\boldsymbol{e} - \boldsymbol{\alpha}\boldsymbol{U}(\boldsymbol{R}_{\cdot i})\boldsymbol{e}\boldsymbol{\alpha}\boldsymbol{U}(\boldsymbol{R}_{\cdot j})\boldsymbol{e}.$$

All joint moments can be computed from the same constructed acyclic graph in quadratic time. Computing the covariance matrix of ℓ rewards can thus be done in $O(|V|^3 + \ell^2|V|^2)$ time. The utility functions `expectation`, `variance`, `covariance`, and `moments` functions provided by `ptdalgorithms` can be used for the multivariate phase-type distributions.

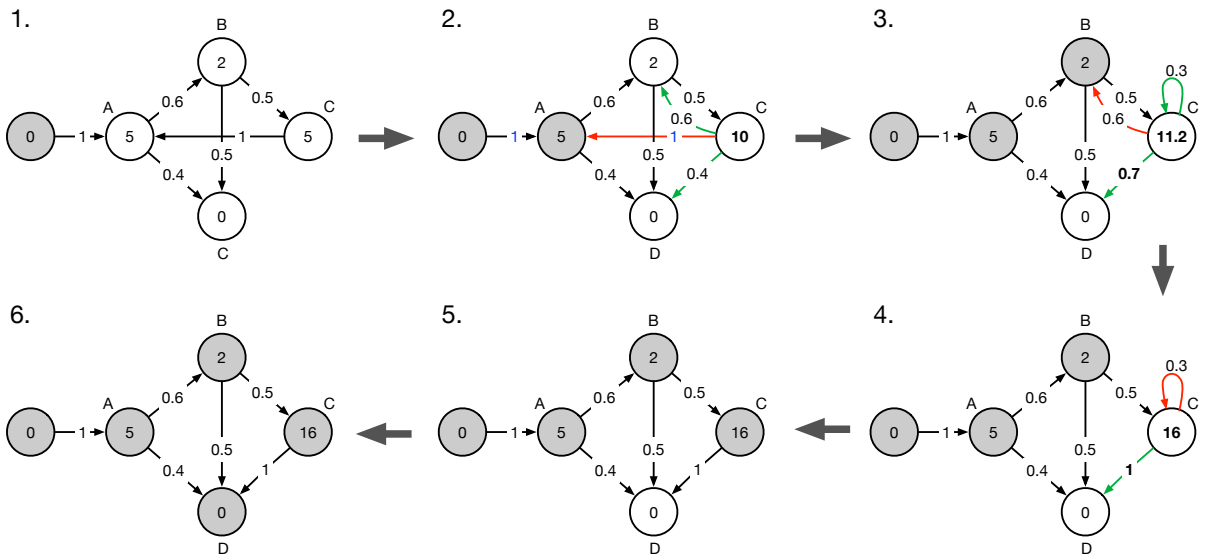

Figure 3: **Ayclic graph construction.** Example conversion of a normalized graph to acyclic form using algorithm 2.3. Visited vertices are colored grey. Removed edges are colored red and new or updated edges are colored green. The saved parameterized vertex updates are: step 2: $x_C \leftarrow x_C + x_A$, step 3: $x_C \leftarrow x_C \cdot 0.6$, step 4: $x_C \leftarrow x_C + x_C \cdot (\frac{1}{1-0.6} - 1)$.

Algorithm 2.3 Expected accumulated rewards until absorption

```
function ExpectedAccumulatedRewards(Graph (V, E))
    Initialize property x_v = r_v for all v ∈ V
    Uniquely index vertices i_v ∈ {1, 2, ..., |V|} matching order in list V
    for v ∈ V do                                          ▷ Set rates of non-absorbing to 1
        for z ∈ children(v) do
            w(v → z) ← w(v → z)/λ_v
            x_v ← x_v + x_v · (1/λ_v − 1)
        end for
    end for
    for v ∈ V do
        for u ∈ parents(v) where  i_u > i_v do
            for z ∈ children(v) do
                if edge (u → z) exists then
                    Increment weight w(u → z) by w(u → v)w(v → z)
                else
                    Add edge (u → z) with weight w(u → v)w(v → z)
                end if
            end for
            x_u ← x_u + x_v · w(u → v)
            Remove edge (u → v)
            if edge (u → u) exists then                   ▷ Rate must be 1, no self loops
                x_u ← x_u + x_u · (1/(1 − w(u → u)) − 1)
                for z ∈ children(u) do
                    w(u → z) ← w(u → z)/(1 − w(u → u))
                end for
                Remove edge (u → u)
            end if
        end for
    end for
    for v ∈ V in inverse order do
        for z ∈ children(v) do
            x_v ← x_v + w(v → z)x_z
        end for
    end for
    return x
end function
```

2.8 Discrete phase-type distributions

A discrete phase-type distribution is the number of jumps in a discrete Markov chain until the absorbing state is entered. States have a total transition probability of 1, and the state-space is traditionally represented by a sub-transition matrix, $\boldsymbol{T}$, of rates between non-absorbing states. The initial distribution is $\boldsymbol{\pi}$. As for the continuous phase-type distributions, the expectation is $\mathbb{E}[\tau] = \boldsymbol{\pi U e}$, but here the Green matrix is defined as $\boldsymbol{U} = -(\boldsymbol{T} - \boldsymbol{I})^{-1}$.

Our graph representation for continuous phase-type distributions directly accommodates unrewarded discrete phase-type distributions. We do not represent self-transitions as self-loops, $(\mathtt{v} \to \mathtt{v})$, as these are not compatible with our graph algorithms. Instead, we represent self-transitions by the missing transition rate, $1 - \lambda_{\mathtt{v}}$. After normalization of the graph, the sum of outgoing weights sum to one and the rescaled reward, $x_{\mathtt{v}}$, is equal to the geometric expectation of consecutive visits to the state (i.e., the transition to $\mathtt{v}$ and immediate self-transitions).

In the normalized discrete phase-type distribution, the sub-transition matrix, $\boldsymbol{T}$, has a diagonal of zero and $\boldsymbol{T} - \boldsymbol{I}$ thus shares the properties of the sub-intensity matrix, $\boldsymbol{S}$, of continuous distributions: a diagonal of -1 and row sums for non-absorbing states of zero. We can thus apply our moment algorithm in (algorithm 2.3) to discrete phase-type distributions as well.

Rewarded discrete phase-type distributions and multivariate discrete phase-type distributions have been described thoroughly in Navarro (2019). We can translate the matrix-based reward transformation algorithm from Theorem 5.2 in Navarro (2019) into one operating on the acyclic graph generated in algorithm 2.3. We do this by augmenting the acyclic graph to ensure that a visit to vertex $\mathtt{v}$ accumulates an integer reward $r_{\mathtt{v}}$. Consider a vertex $\mathtt{v}$ with reward $r_{\mathtt{v}} \in \mathbb{N}$. We augment the graph with a new sequence of connected auxiliary vertices, $\mathtt{H}_1 \to \mathtt{H}_2 \to \cdots \to \mathtt{H}_{r_{\mathtt{v}}-1} \to \mathtt{v}$, each connected by a single edge with weight 1. The last auxiliary vertex has an edge with weight 1 to the vertex $\mathtt{v}$ and the edge $(\mathtt{v} \to \mathtt{H}_1)$ has weight equal to the self-transition rate. By further redirecting all in-going edges to $\mathtt{v}$ to $\mathtt{H}_1$instead, we ensure that each visit to the vertex $\mathtt{v}$, results in $r_{\mathtt{v}}$ jumps in the unrewarded discrete phase-type distribution. Reward transformation of zero rewards can be done using the algorithm for the continuous phase-type distribution.

Higher-order moments are well defined for rewarded discrete phase-type distributions (see proposition 5.7 in Navarro (2019). The first moment is:

$$\mathbb{E}[\tau] = \boldsymbol{\pi U} \triangle(\boldsymbol{r}) \boldsymbol{e}$$

and the second moment is:

$$\mathbb{E}[\tau^2] = 2\boldsymbol{\pi U} \triangle(\boldsymbol{r}) \boldsymbol{U} \triangle(\boldsymbol{r}) \boldsymbol{e} - \boldsymbol{\pi U} \triangle(\boldsymbol{r}^2) \boldsymbol{e}$$

As for the continuous phase-type distribution, we can construct a multivariate discrete phase-type distribution by associating a vector of zero or positive integers as rewards to each vertex. The moment generating function is well defined for multivariate discrete phase-type distributions by matrix-equations (section 5.2.4 in Navarro (2019)). For example, the first cross moment is:

$$\mathbb{E}[Y_i Y_j] = \boldsymbol{\pi U} \triangle(\boldsymbol{r_i}) \boldsymbol{U} \triangle(\boldsymbol{r_j}) \boldsymbol{e} + \boldsymbol{\pi U} \triangle(\boldsymbol{r_j}) \boldsymbol{U} \triangle(\boldsymbol{r_i}) \boldsymbol{e} - \boldsymbol{\pi U} \triangle(\boldsymbol{r_i}) \triangle(\boldsymbol{r_j}) \boldsymbol{e}$$

Although the the moments of discrete phase-type distributions are defined differently from those of continuous phase-type distributions, terms involving $\boldsymbol{U}$ still have the form $\boldsymbol{U} \triangle(\boldsymbol{r}) \boldsymbol{e}$ from the right-hand side, which reduces to a single vector of rewards $\boldsymbol{U} \triangle(\boldsymbol{r}) \boldsymbol{e} = \triangle(\boldsymbol{r'}) \boldsymbol{e} = \boldsymbol{r'}$. These rewards correspond to the row sums of the Green matrix computed for the previous moment, as described for continuous phase-type distributions in section 2.4. This allows the $O(|V|^2)$ computation of higher order moments as described for continuous phase-type distributions in section 2.6.

2.9 Distribution function of discrete phase-type distributions

The probability mass function (PMF) of a discrete phase-type distribution at time t describes the probability of the Markov Chain entering the absorbing state exactly at jump t. A defective distribution, i.e., one where the initial probability vector does not sum to 1, will have a non-zero probability at $t = 0$. Likewise, the cumulative distribution function (CDF) describes, for time t, the probability that the Markov Chain has entered the absorbing vertex at jump t or before. In matrix form, the CDF is given by:

$$1 - \boldsymbol{\pi}\boldsymbol{T}^t\boldsymbol{e}$$

The Markov Chain embedded in the acyclic graph allow us to express the PMF of the discrete phase-type distribution as a recursion on t (Eisele, 2006). In our graph, we represent the probability of staying at vertex $\mathtt{v}$ after t jumps as a vertex-property $\mathtt{v}.q$ and compute the recursion as:

$$\mathtt{v}.q' = \sum_{\mathtt{u} \in \text{parents}(\mathtt{v})} \mathtt{u}.q \cdot w(\mathtt{u} \to \mathtt{v}) + (1 - \lambda_{\mathtt{v}})\mathtt{v}.q$$

for $t \geq 0$. In the base-case $t = -1$ $\mathtt{v}.q$ is zero for all vertices except the starting vertex where $\mathtt{S}.q = 1$. Using dynamic programming, we can find the PMF (and thereby the CDF) at time t by first computing the PMF at time $0, 1, \ldots, t-1$. To compute the CDF at time t, we sum over the PDF at times $0, 1, \ldots, t$. The asymptotic complexity of the computation to time t is $O(t|V|^2)$, which is both orders of magnitude faster and more memory efficient than matrix-based computations, which require $t - 1$ matrix multiplications or inversion of the matrix in order to diagonalize it.

We note that, although computationally intractable, the joint distribution function of multivariate discrete phase-type distributions can also be described by such a recursive algorithm by replacing the scalar $\mathtt{v}.q$ with an array of accumulated rewards that are incremented at each time step.

2.10 Distribution function for continuous phase-type distributions

Using the matrix formulation of continuous phase-type distributions, computing the CDF requires exponentiation of the sub-intensity matrix. However, a continuous phase-type distribution can be approximated, with arbitrary precision, by a discrete phase-type distribution (Bobbio et al., 2004). The number of discrete steps occupying each state has a geometric expectation that approximates the exponential expectation of the continuous distribution. This allows us to efficiently compute the PDF, the CDF, and the probability of occupying each state at any time, using algorithm-2.4. The precision is determined by the size of discrete steps, which in turn is controlled by the granularity parameter. A granularity of 1000 implies that each time unit of the continuous distribution is divided into 1000 discrete steps. As the graph representations used for discrete and continuous phase-type distributions are identical, we can simply divide all outgoing weights by this granularity.

To verify the numerical accuracy of this approach, we compared it to the matrix exponential of a phase-type distribution with 1000 fully connected states. Transition rates were sampled randomly in the interval $[0, 1]$, and each graph vertex thus had an average total outgoing rate of 500. With a granularity of 10,000, the average self-loop probability is thus 0.95. We computed the cumulative distribution function for times $(0, 0.01, 0.02, \ldots, 1.00)$ using both algorithm-2.4 and the matrix exponential $1 - \boldsymbol{\alpha}e^{\boldsymbol{S}t}\boldsymbol{e}$ and the `ptdalgorithms` package. The average absolute and maximum difference were 0.00003 and 0.0002, respectively.

2.11 Time-inhomogeneous discrete phase-type distributions

The algorithms presented so far have assumed that the phase-type distributions are time-homogeneous, i.e., that the rates between states are constant in time. The alternative time-inhomogeneous phase-type distributions are also well-described using matrix-based equations (Albrecher and Bladt, 2019). Although time-inhomogeneous phase-type distributions are not the focus of this paper, we note that our algorithm for computing the distribution function (algorithm-2.4) can be applied to produce the distribution and state probability vector of a time-inhomogeneous phase-type distribution. This is achieved by changing edge weights at each time step (using the function `graph_update_weights_parameterized` in `ptdalgorithms`) in effect allowing the edge weight or the existence of an edge to be a time-dependent variable. Having computed the probability distribution in this way, we can compute all moments of unrewarded time-inhomogeneous phase-type distributions and the expectation of rewarded time-inhomogeneous phase-type distributions.

Because algorithm 2.4 computes the probability of standing at each vertex at any given time step, we can compute the accumulated waiting time in each state by some time t, $\boldsymbol{a}(t)$. This allows us to compute the expectation of a reward-transformed truncated distribution as the dot product $\boldsymbol{r} \cdot \boldsymbol{a}(t)$. In models where the state-space changes at only at one or a few points in time, this provides an efficient means to compute the expectation as the sum of expectations of truncated time-homogeneous distributions.

3 Empirical running time

Here we describe the empirical running time of state-space construction, moment computation, and computation of the cumulative distribution in the rabbit island model shown in fig. 1. All experiments are done on a MacBook Pro with an i7 processor using a single core.

Although all features of the `ptdalgorithms` library are exposed as `R` functions, the similar `C` API offers an efficient alternative for the generation of very large state spaces. In fig. 4A, we show the time it takes to construct the state space for different numbers of rabbits using both the `R` and `C` APIs. For 1000 rabbits, where the system has more than half a million states, we can construct the state-space compute the expectation in two minutes (not shown). Figure 4B shows the time used to construct the acyclic moment graph, compared to the matrix inversion required by the matrix formulation. Figure 4C shows the time it takes to compute 100 moments or cross-moments (E.g., a 10x10 covariance matrix) once the moment graph is constructed. Figure 4D shows the time it takes to compute the CDF until 0.99.

4 An application in population genetics

To demonstrate the capabilities of `ptdalgorithms`, we feature an example from the field of population genetics. In a recent paper (Kern and Hey, 2017), the authors describe and implement a method for the exact computation of what, in population genetics, is known as the joint site frequency spectrum (JSFS) for an isolation-with-migration (IM) model. A site frequency spectrum (SFS) is simply the number of single-base genetic variants shared by $1 \ldots n-1$ among n DNA sequences sampled from a population. The JSFS tabulates the variants shared by i sequences in one population and j in another. This JSFS matrix can be obtained empirically and reflects joint effects of the population size, the migration rate between the two populations, and the time since the two populations shared a common ancestral population (fig. 5A).

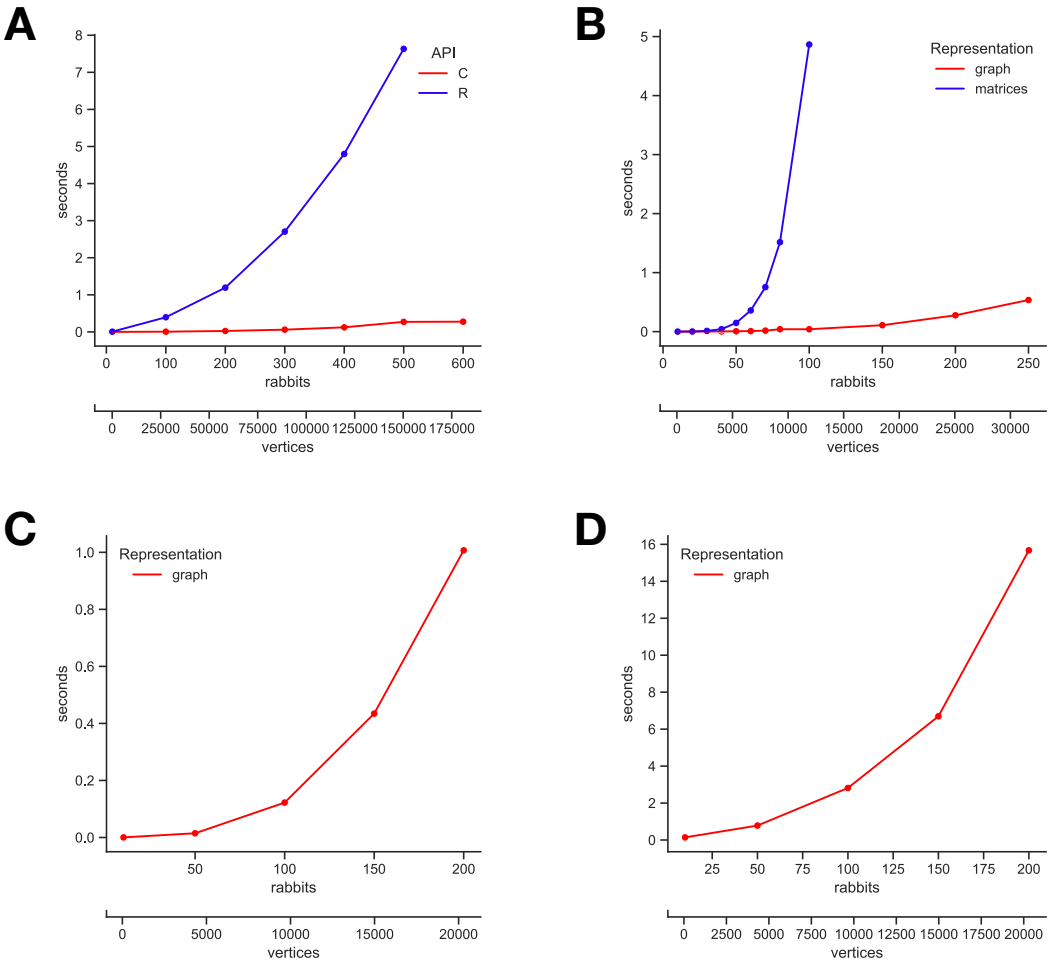

Figure 4: **Empirical running time experiments**: **(A)** Running time in seconds to construct the rabbit example state-space from fig. 1. The x-axis is the number of starting rabbits. The blue curve is with an implementation in `C`, the red curve is the implementation in `R`. **(B)** Running time in seconds to build the list of variable changes to compute the moments in the rabbit example state-space from fig. 1. The x-axis is the number of vertices. The blue curve is the time to build the list of variable increments to compute moments. Red curve is time to "naively" invert the state-space matrix using `solve` in `R`. **(C)** Running time in seconds to compute 100 moments after computing the moment graph once fig. 1. The x-axis is the number of vertices. **(D)** Running time in seconds to find the distribution until 0.99 CDF. With granularity 10000 fig. 1. The x-axis is the number of vertices.

A genetic variant that appears in three samples from population one and four samples from population two, arose from a mutation on a genealogical lineage with three and four descendants in populations one and two. Knowing the mutation rate, the JSFS is given by the expected length of branches with different numbers of descendants in each population. The Coalescent models the length of such ancestral branches (Kingman, 1982), and formulated as a continuous phase-type distribution, states may represent ancestral lineages with particular numbers (i,j) of descendants in each population. The initial state represents i and j individual lineages, each with a single descendant. The absorbing state is reached when all lineages have found a single common ancestor.

The IM model is not time-homogeneous as it changes from two separate populations to a single shared one at time T. With `ptdalgorithms`, we can easily model this using one time-homogeneous continuous phase-type distribution truncated at time T and another representing the system after time T, as described in section 2.11. The first represents the stage with two populations, and the second is the stage with one shared population.

The expected length of genealogical branches with i and j descendants from the two populations is readily computed after appropriately reward-transforming the two phase-type distributions. With seven samples from each population, the two state spaces have 123,135 and 2,999 states. Using their software built and optimized for this specific purpose, Kern and Hay computed the JSFS in 15 minutes using 12 cores. For comparison, the state space construction and computation of JSFS takes only 35 seconds on a single core using `ptdalgorithms` (fig. 5B). This is particularly noteworthy considering that `ptdalgorithms` is a general purpose library not tailored to this specific problem. The code for construction of the model and computing the JSFS is available with `ptdalgorithms` on GitHub.

5 Conclusion

In this paper, we have presented a new open-source library called `ptdalgorithms` written in `C` that implements graph-based algorithms for constructing and transforming unrewarded and rewarded continuous and discrete phase-type distributions and for computing their moments and distribution functions. The computation of moments extends to multivariate phase-type distributions and we provide some additional support for time-inhomogeneous phase-type distributions. The library has a native interface in two programming languages `C` and `R`. Some of the methods presented in this paper build on previously published graph-based matrix manipulation, but to our knowledge, this is the first time these graph-based approaches have been applied to phase-type distributions and published as an accessible software package.

The straightforward iterative construction of state spaces lends itself to powerful modeling and our algorithms allow the computation of moments and distributions for huge state spaces. The general multivariate phase-type distributions allow marginal expectations and the covariance between events to be studied easily. As `ptdalgorithms` include functions for converting between graph and matrix representations, our library may serve as a plug-in in a multifaceted modeling and inference process. We hope that this package will enable users to easily and accessibly model many different complex phenomena in natural sciences, including population genetics.

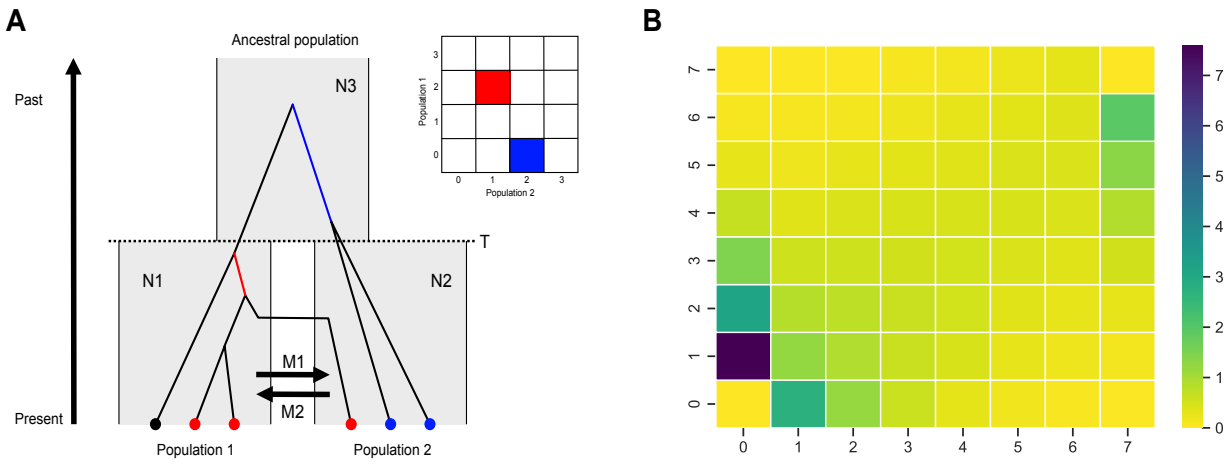

Figure 5: **The exact joint site frequency spectrum of an isolation-with-migration model**: **(A)** The isolation-with-migration model. One ancestral population is split in two at time T, after which the descendant populations are only connected by migration at rates $M1$ and $M2$ in each direction. Scaled population sizes are $N1$, $N2$, and $N3$. In the example genealogy, the red branch has two descendants in population one and one descendant in population two. The blue branch has two descendants in population two and none in population one. The insert matrix shows the entries in the JSFS that the two example of branches contribute to. (B) Exact joint site frequency spectrum. Population-scaled parameters are N1=2, N2=1, N3=4, M1=0.005, M2=2, T=3). Each (i,j) cell shows the expected length of branches with i descendants from population one and j descendants from population two.

References

O. O. Aalen. Phase type distributions in survival analysis. Scandinavian journal of statistics, pages 447–463, 1995.

C. Acal, J. E. Ruiz-Castro, A. M. Aguilera, F. Jiménez-Molinos, and J. B. Roldán. Phase-type distributions for studying variability in resistive memories. Journal of Computational and Applied Mathematics, 345:23–32, 2019.

H. Albrecher and M. Bladt. Inhomogeneous phase-type distributions and heavy tails. Journal of Applied Probability, 56(4):1044–1064, 2019.

M. Bladt and B. F. Nielsen. Matrix-exponential distributions in applied Probability, volume 81. Springer, 2017.

A. Bobbio, A. Horváth, and M. Telek. The scale factor: a new degree of freedom in phase-type approximation. Performance Evaluation, 56(1-4):121–144, 2004.

A. Cumani. On the canonical representation of homogeneous markov processes modelling failure-time distributions. Microelectronics Reliability, 22(3):583–602, 1982.

K.-T. Eisele. Recursions for compound phase distributions. Insurance: Mathematics and Economics, 38(1):149–156, 2006.

M. Faddy and S. McClean. Analysing data on lengths of stay of hospital patients using phase-type distributions. Applied Stochastic Models in Business and Industry, 15(4):311–317, 1999.

M. Frydenberg. The chain graph Markov property. Scandinavian Journal of Statistics, pages 333–353, 1990.

A. Hobolth, A. Siri-Jegousse, and M. Bladt. Phase-type distributions in population genetics. Theoretical population biology, 127:16–32, 2019.

A. Hobolth, M. Bladt, and L. N. Andersen. Multivariate phase-type theory for the site frequency spectrum. Journal of Mathematical Biology, 2021.

A. D. Kern and J. Hey. Exact calculation of the joint allele frequency spectrum for isolation with migration models. Genetics, 207(1):241–253, 2017.

J. F. Kingman. On the genealogy of large populations. Journal of applied probability, 19(A): 27–43, 1982.

A. C. Navarro. Order statistics and multivariate discrete phase-type distributions. 2019.

H. L. Younes and R. G. Simmons. Solving generalized semi-Markov decision processes using continuous phase-type distributions. In AAAI, volume 4, page 742, 2004.

Algorithm 2.4 The distribution function of a discrete phase-type distribution

```
Initialize the number of jumps to t = −1
Initialize the property v.q = 0 for all vertices v ∈ V, and let S.q = 1. Let v.q be the current
  probability of standing at the vertex v at time t
Assume out-going weights summing to a value less than or equal to 1
Let cdf[] be a an array of the cumulative distribution function such that the entry 0 corresponds
  to the start at no jumps, t = 0.
Let pmf[] be an array of the probability mass function.
Initialize cdf[−1] = 0 and pmf[−1] = 0
function StepDPH(V, E)
    for v ∈ V do
        v.r ← v.q
    end for
    for v ∈ V do
        for z ∈ children(v) do
            z.q ← z.q + v.r · w(v → z)
            v.q ← v.q − v.r · w(v → z)
        end for
    end for
    t ← t + 1
    cdf[t] ← cdf[t − 1]
    for v ∈ V do
        if children(v) = ∅ then
            cdf[t] ← cdf[t] + v.q
            v.q ← 0
        end if
    end for
    pdf[t] ← cdf[t] − cdf[t − 1]
end function

function DistributionFunction(Graph (V, E), t)
    while i ≤ t do
        StepDPH(V, E)
        i ← i + 1
    end while
end function
```