A comprehensive proteomic and bioinformatics analysis of human spinal cord injury plasma identifies proteins associated with the complement cascade and liver function as potential prognostic indicators of neurological outcome

Gabriel Mateus Bernardo Harrington, PhD* Paul Cool, MD†
Charlotte Hulme, PhD Jessica Fisher-Stokes, MRes Mandy Peffers, PhD
Wagih El Masri, MD Aheed Osman, MBChB Joy Roy Chowdhury, MBBS
Naveen Kumar, MBBS Srinivasa Budithi, MD Karina Wright, PhD‡

2022-07-26

1 Abstract

1.1 Introduction

Spinal Cord Injury (SCI) is a major cause of disability, with complications post-injury often leading to life-long health issues with need of extensive treatment. Neurological outcome post-SCI can be variable and difficult to predict, particularly in incomplete injured patients. The identification of specific SCI biomarkers in blood, may be able to improve prognostics in the field. This study has utilised proteomic and bioinformatics methodologies to investigate differentially expressed proteins in plasma samples across human SCI cohorts with the aim of identifying prognostic biomarkers and biological pathway alterations that relate to neurological outcome.

1.2 Methods and Materials

Blood samples were taken, following informed consent, from ASIA impairment scale (AIS) grade C "Improvers" (those who experienced an AIS grade improvement) and "Non-Improvers" (No AIS change), and AIS grade A and D at <2 weeks ("Acute") and approx. 3 months ("Sub-acute") post-injury. The total protein concentration from each sample was extracted, with pooled samples being labelled and non-pooled samples treated with ProteoMiner™ beads. Samples were then analysed using two 4-plex isobaric tag for relative and absolute quantification (iTRAQ) analyses and a label-free experiment for comparison, before quantifying with mass spectrometry. Data are available via ProteomeXchange with identifiers PXD035025 and PXD035072 for the iTRAQ and label-free experiments respectively.

Proteomic datasets were analysed using OpenMS (version 2.6.0). R (version 4.1.4) and in particular, the R packages MSstats (version 4.0.1) and pathview (version 1.32.0) were used for downstream analysis. Proteins of interest identified from this analysis were further validated by enzyme-linked immunosorbent assay (ELISA).

*Keele University
†Robert Jones and Agnes Hunt Orthopaedic Hospital NHS Foundation Trust; Keele University
‡karina.wright1@nhs.net

1.3 Results

The data demonstrated proteomic differences between the cohorts, with the results from the iTRAQ approach supporting those of the label-free analysis. A total of 79 and 87 differentially abundant proteins across AIS and longitudinal groups were identified from the iTRAQ and label-free analyses, respectively. Alpha-2-macroglobulin (A2M), retinol binding protein 4 (RBP4), serum amyloid A1 (SAA1), Peroxiredoxin 2, alipoprotein A1 (ApoA1) and several immunoglobulins were identified as biologically relevant and differentially abundant, with potential as individual prognostic biomarkers of neurological outcome. Bioinformatics analyses revealed that the majority of differentially abundant proteins were components of the complement cascade and most interacted directly with the liver.

1.4 Conclusions

Many of the proteins of interest identified using proteomics were detected only in a single group and therefore have potential as a binary (present or absent) biomarkers, RBP4 and PRX-2 in particular. Additional investigations into the chronology of these proteins, and their levels in other tissues (cerebrospinal fluid in particular) are needed to better understand the underlying pathophysiology, including any potentially modifiable targets. Pathway analysis highlighted the complement cascasde as being significant across groups of differential functional recovery.

2 Introduction

Spinal cord injury (SCI) is the transient or permanent loss of normal spinal sensory, motor or autonomic function, and is a major cause of disability. Globally, SCI affects around 500,000 people each year and is most commonly the result of road traffic accidents or falls.(Crozier-Shaw, Denton, and Morris 2020) Patients typically require extensive medical, rehabilitative and social care at high financial cost to healthcare providers. The lifetime cost of care in the UK is estimated to be £1.12 million (mean value) per SCI, with the total cost of SCI in the UK to the NHS being £1.43 billion in 2016.(McDaid et al. 2019) Individuals with SCI show markedly higher rates of mental illness relative to the general population.(Furlan, Gulasingam, and Craven 2017) Complications arising post-SCI can be long-lasting and often include pain, spasticity and cardiovascular disease, where the systemic inflammatory response that follows SCI can frequently result in organ complications, particularly in the liver and kidneys.(Gris, Hamilton, and Weaver 2008; Sun et al. 2016; Hagen 2015)

The recovery of neurological function post-SCI is highly variable, requiring any clinical trials to have an impractically large sample size to prove efficacy, hence the translation of novel efficacious therapies is challenging and expensive.(Spiess et al. 2009) Being able to more accurately predict patient outcomes would aid clinical decisions and facilitate future clinical trials. Therefore, novel biomarkers that allow for stratification of injury severity and capacity for neurological recovery would be of high value to the field.

Biomarkers studies in SCI often investigate protein changes in cerebral spinal fluid (CSF) as the closer proximity of this medium is thought to be more reflective of the parenchymal injury.(Brian K. Kwon et al. 2019; Hulme et al. 2017) Whilst this makes CSF potentially more informative for elucidating the pathology of SCI, the repeated use of CSF for routine analysis presents challenges in clinical care due to the risk and expense associated with the invasiveness of the collection procedure. In contrast, systemic biomarkers measurable in the blood represent a source of information that can be accessed and interpreted both a lower cost and risk. Studies of traumatic brain injury have demonstrated that protein markers identified in CSF are also detectable in both plasma and serum.(Wang et al. 2018) More recently, circulating white blood cell populations have also been identified as potential SCI injury biomarkers, with a 2021 study showing that elevated levels of neutrophils were associated with no AIS grade conversion, while conversely an increase in lymphocytes during the first week post-SCI were associated with an AIS grade improvement.(Jogia et al. 2021)

A number of individual proteins have been shown to be altered in the bloods post-SCI, including multiple interleukins (IL), tumour necrosis factor alpha (TNF-α) and C-reactive protein (CRP).(Segal et al. 1997; Hayes et al. 2002; Frost et al. 2005)

Further, changes in inflammatory marker levels detected in acute SCI patients were found to be mirrored in donor-matched blood and CSF, albeit at lower absolute concentrations systemically.(Brian K. Kwon et al. 2010)

Previously, we have shown that routinely collected blood measures associated with liver function and inflammation added predictive value to AIS motor and sensor outcomes at discharge and 12-months post-injury.(Bernardo Harrington et al. 2020; Brown et al. 2019) The current study uses an unbiased shotgun proteomic approach to investigate differentially expressed proteins in SCI patients, coupled with bioinformatics pathway and network analyses.

3 Methods and Materials

3.1 Patients

Blood samples were taken from SCI patients who had provided informed consent and in accordance to ethical provided by the National Research Ethics Service [NRES] Committee North West Liverpool East [11/NW/0876]. "Improvers" were defined as individuals who experienced an AIS grade improvement from admission to a year post-injury, whereas "non-improvers" were defined as patients who saw no change in AIS grade in the same period (Table 1).

Table 1: Patient demographics. ± denotes interquartile range

	n	Percent
Polytrauma		
Yes	16	41
No	23	59
Gender		
F	13	33
M	26	67
Diabetes		
Yes	7	18
No	32	82
Neurological level		
C	26	67
L	4	10
T	9	23
AIS change		
A	11	28
C	7	18
C->D	10	26
D	11	28
Age at injury (Median years±IQR)	53±26	-

3.2 Plasma collection and storage

Plasma samples were collected within 2 weeks of injury (acute) and at approximately 3 months post-injury (subacute). Upon collection in EDTA (ethylenediaminetetraacetic acid) coated tubes samples were centrifuged at 600g for 15 minutes, to pellet erythrocytes and the resultant plasma fraction was aspirated and divided into aliquots for long-term storage in -80°C briefly and liquid nitrogen in the longer term.

3.3 Sample preparation and analysis using iTRAQ proteomics

Thawed plasma samples ($2\mu l$) each were diluted with distilled water ($98\mu l$). Total protein was quantified using a Pierce™ $660nm$ Protein Assay (Thermo Fisher Scientific, Hemel Hempstead, UK)(Stoscheck 1987).

A total of $100mg$ of plasma protein was taken from each sample and pooled equally to form a patient test group. For example, the AIS C improver group was pooled from 10 separate patient samples, 10mg of protein per patient.

The pooled plasma samples were precipitated by incubation of the sample in six times the volume of chilled acetone for 1 hour at -20°C. The samples were then centrifuged at 6,000G for 10 minutes at 4°C, and re-suspended in $200\mu l$ of triethylammonium bicarbonate buffer. Sequencing Grade Modified Trypsin ($10\mu g/85\mu g$ of protein; Promega, Madison, WI, USA) was then added to the samples for overnight digestion at 37°C. Peptides underwent reduction and alkylation (according to the manufacturer's instructions; Applied Biosystems, Bleiswijk, The Netherlands). Tryptic digests were labelled with iTRAQ tags (again according to the manufacturer's instructions for the iTRAQ kit), before being pooled into test groups and dried in a vacuum centrifuge. Two individual iTRAQ experiments were set up, the first to assess acute and sub-acute improvers or non-improvers and the second to assess acute improvers and non-improvers to AIS grade A and D patients. The following tags were used for each group of patient samples 114 tag - acute improvers, 115 tag - sub-acute improvers, 116 tag - acute non-improvers and 117 tag - sub-acute non-improvers for run 1 and 114 tag - acute improvers, 115 tag - acute non-improvers, 116 tag - AIS grade A and 117 tag - AIS grade D for run 2.

3.3.1 iTRAQ mass spectrometry analysis

The samples were analysed at the BSRC St. Andrews University Mass Spectrometry and Proteomics Facility. A total of 12 SCX fractions were analysed by nano-electrospray ionisation-liquid chromatography/tandem mass spectrometry (LC-MS/MS) using a TripleTOF 5600 tandem mass spectrometer (AB Sciex, Framingham, MA, USA) as described previously.(Fuller et al. 2015) Each fraction ($10\mu l$) was then analysed by nanoflow LC-ESI-MSMS, as described previously.

The mass spectrometry proteomics data have been deposited to the ProteomeXchange Consortium via the PRIDE partner repository with the dataset identifier PXD035025 and 10.6019/PXD035025.(Perez-Riverol et al. 2021)

3.4 Sample preparation and analysis using label-free proteomics

No sample pooling was used, and so each of the 73 samples were maintained separately throughout protein equalisation, mass spectrometry, and label-free quantification steps. Thus, protein abundance was quantified for each sample, whereupon mean protein abundance across experimental groups was calculated to assess protein changes.

To reduce the dynamic range of proteins, ProteoMiner™ beads (BioRad, Hemel Hempstead, UK) were used.(Boschetti and Righetti 2008) Total protein was quantitated with a Pierce™ $660nm$ Protein Assay (Thermo Fisher Scientific, Hemel Hempstead, UK), whereupon 5 mg of total protein was applied to ProteoMiner™ beads, and processed as described previously.(Stoscheck 1987; Peffers et al. 2015)

3.4.1 Label free mass spectrometry analysis

Tryptic peptides were subjected to LC-MC/MC via a 2-h gradient on a NanoAcquity™ ultraperformance LC (Waters, Manchester, UK) connected to a Q-Exactive Quadrupole-Orbitrap instrument (Thermo-Fisher Scientific Hemel Hempstead, UK).

The Q-Exactive was operated in a data dependent positive electrospray ionisation mode, automatically switching between full scan MS and MS/MS acquisition. Survey full scan MS spectra (m/z 300–2000) were acquired in the Orbitrap with 70,000 resolution (m/z 200) following accumulation of ions to 1×10^6 target value based on the predictive automatic gain control values from the previous full scan. Dynamic exclusion was set to 20s, the 10 most intense multiply charged ions ($z \geq 2$) were sequentially isolated and fragmented

in the octopole collision cell by higher energy collisional dissociation (HCD), with a fixed injection time of 100ms and 35,000 resolution. The following mass spectrometric conditions were used: spray voltage, 1.9kV, no sheath or axillary gas flow; normalised HCD collision energy 30%; heated capillary temperature, 250°C. MS/MS ion selection threshold was set to 1×10^4 count and 2Da isolation width was set.

The mass spectrometry proteomics data have been deposited to the ProteomeXchange Consortium via the PRIDE partner repository with the dataset identifier PXD035072 and 10.6019/PXD035072.(Perez-Riverol et al. 2021)

3.5 iTRAQ OpenMS analysis

TripleTOF 5600 tandem mass spectrometer output files produced in the ABSciex proprietary `.wiff` file format were converted to an open file format, `.mzML` for analysis with OpenMS (version 2.6.0). The docker image of ProteoWizard version 3.0.20287 was used for conversion, and peak picking was applied on conversion (Chambers et al. 2012). OpenMS version 2.6.0 was used for further analysis.(Röst et al. 2016) Unless otherwise stated, default arguments were used. The 12 fraction files were merged and sorted by retention time. A decoy database was generated with `DecoyDatabase` and the `-enzyme` flag set to `Trypsin`, the human reference proteome was taken from Uniprot (Proteome ID: UP000005640, downloaded: 2020-10-01), as was the `.fasta` for porcine trypsin (Entry: P00761, downloaded: 2020-10-01).(The UniProt Consortium 2021)

The `MSFGPlusAdapter` was used to run the search. For the `-fixed_modifications` "Methylthio (C)" and "iTRAQ4plex (N-term)" were passed due to the alkylating agent used in sample preperation and to account for the N-terminus modifications made by iTRAQ tags. "Oxidation (M)" was passed to `-variable_modifications` to reflect the likely occurrence of methionine oxidation. To reflect the instrument the following flags were also set: `-precursor_mass_tolerance 20 -enzyme Trypsin/P -protocol iTRAQ -instrument high_res`.

To annotate the search results `PeptideIndexer` and `PSMFeatureExtractor` were used. For peptide level score estimation and filtering `PercolatorAdapter` was used with the following arguments: `-score_type q-value -enzyme trypsinp`. `IDFilter` was used to filter to a peptide score of 0.05 with `-score:pep 0.05`

`IsobaricAnalyzer` with `-type itraq4plex` was used with the merged `.mzML` files to assign protein-peptide identifications to features or consensus features with `IDMApper`. The files for each run output by `IDMapper` were then merged with `FileMerger`. Bayesian score estimation and protein inference was performed with `Epifany` and the following flags: `-greedy_group_resolution remove_proteins_wo_evidence -algorithm:keep_best_PSM_only false` Decoys were removed and 0.05 FDR filtering was done via `IDFilter` with `-score:protgroup 0.05 -remove_decoys`. Finally, `IDConflictResolver` was used to resolve ambiguous annotations of features with peptide identifications, before quantification with `ProteinQuantifier`.

3.6 Label free OpenMS analysis

For quantification, the raw spectra files were analysed via OpenMS (version 2.6.0) command line tools, with the workflow from the prior section (3.5) adapted to suit a label-free analysis. The files were first converted from the proprietary .Raw format to the open .mzML standard with the `FileConverter` tool via the open-source `ThermoRawFileParser`.(Röst et al. 2016; Hulstaert et al. 2020) Unless otherwise stated, default arguments were used throughout.

The decoy database generated in the prior section (iTRAQ OpenMS analysis) was also re-used. The `CometAdapter` was used to run the search.(Eng, Jahan, and Hoopmann 2013) Fixed modifications were set to "Carbamidomethyl (C)" and "Oxidation (M)" was set as a variable modification. To reflect the instrument the following flags were also set: `-precursor_mass_tolerance 20 -isotope_error 0/1`.

To annotate the identified peptides with proteins the `PeptideIndexer` tool was used. `PeptideIndexer` and `PSMFeatureExtractor` were used for annotation. For peptide level score estimation and filtering `PercolatorAdapter` was used with the following flags: `-score_type q-value -enzyme trypsin`. `IDFilter` was used to filter to a peptide score of 0.01 with `-score:pep 0.01` followed by `IDScoreSwitcher` with the

following flags: `-new_score "MS:1001493" -new_score_orientation lower_better -new_score_type "pep" -old_score "q-value"`. The `ProteomicsLFQ` was used for subsequent processing with the flags: `-proteinFDR 0.05 -targeted_only true`. The `-out_msstats` flag was also used to produce quantitative data for downstream statistical analysis with the R package `MSstats`.(Choi et al. 2014)

3.7 Network and pathway analysis

The Bioconductor package ReactomePA, which employs the open-source, open access, manually curated and peer-reviewed pathway database Reactome was used for network analysis.(Yu and He 2016; Jassal et al. 2020)

3.8 Enzyme-linked immunosorbent assays

Four proteins identified by the iTRAQ analysis were measured by enzyme-linked immunoabsorbent assay (ELISA) from non-pooled samples to validate the iTRAQ findings.

These proteins were alpha-2-macroglobulin (A2M), retinol binding protein 4 (RBP4), serum amyloid A1 (SAA1) and apolipoprotein A1 (ApoA1). They were selected for their biological relevance and differential abundance between AIS C improvers and non-improvers, implying potential as biomarkers of neurological outcome prediction. A2M, RBP4 and SAA1 were assessed using a human DuoSet® ELISAs (R&D Systems, Abingdon, UK). ApoA1 was assessed using a human Quantikine® ELISA (R&D Systems, Abingdon, UK). Samples were diluted 1:600,000 for A2M and RBP4, 1:100 for SAA1 and 1:20,000 for ApoA1 in the respective assay kit diluent. Samples that were above the assay detection limit were rerun at 1:300 and 1:40,000 for SAA1 and ApoA1 respectively. All ELISAs were carried out according to the manufacturer's protocol. Protein concentrations were normalised to the sample dilution factor. Statistical analysis was performed using the statistical programming language R version 4.1.3 (2022-03-10). Pairwise t tests with bonferroni adjusted P-values with the R `rstatix` package were used to assess differential abundance.

4 Results

Plasma from American Spinal Injury Association (ASIA) grade C SCI patients (total n=17) contrasting those who experienced an AISA grade conversion (n=10), and those who did not (n=7) collected within 2 weeks, and at approximately 3 months post-injury (Improvers n=9 vs Non-improvers n=6). Relative protein abundance in AIS grade A (n=10) and grade D (n=11) patients was also examined.

In the interest of brevity, only the plots of acute and subactue AIS C improvers VS non-improvers are included here, please see the supplemental data for the other comparisons (section 5).

4.1 iTRAQ analyses

4.2 Differential protein abundances

AIS C improvers had 18 more abundant proteins and 49 less abundant proteins at the acute phase relative to non-improvers. Similarly, at the subacute phase, AIS C improvers had 34 more abundant proteins and 34 less abundant proteins relative to non-improvers. The AIS A group had 56 more abundant and 9 less abundant proteins respectively relative to non-improvers. Acutely, AIS C improvers relative to AIS A and D had 21 and 53 more abundant and 46 and 12 less abundant proteins.

Please see the Tables S2, S3 & S4 for a full list of protein fold change changes.

4.3 Heatmaps

The majority of the pathways associated with the proteins identified by these iTRAQ experiments are related to the complement cascade and platelet activity (Figure 1, 2). There are also several pathways implicated in metabolic processes, particularly with apolipoproteins and retinoids.

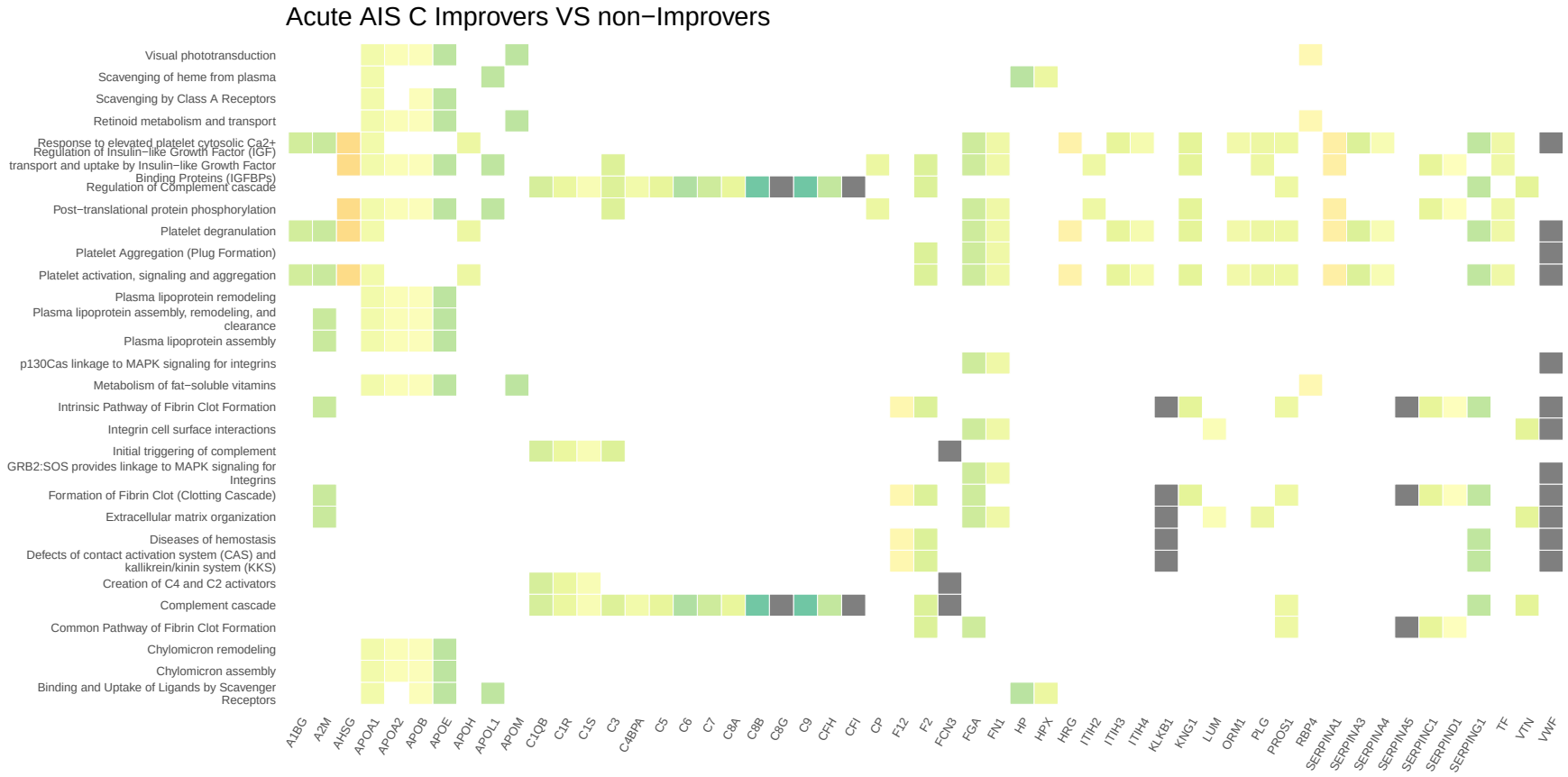

Figure 1: Heatmap denoting the $\log_2$ fold change of proteins in plasma collected 2-weeks post-injury, and the biological pathways these proteins are associated with on Reactome. This compares AIS C SCI patients who experienced an AIS grade improvement and those who did not.

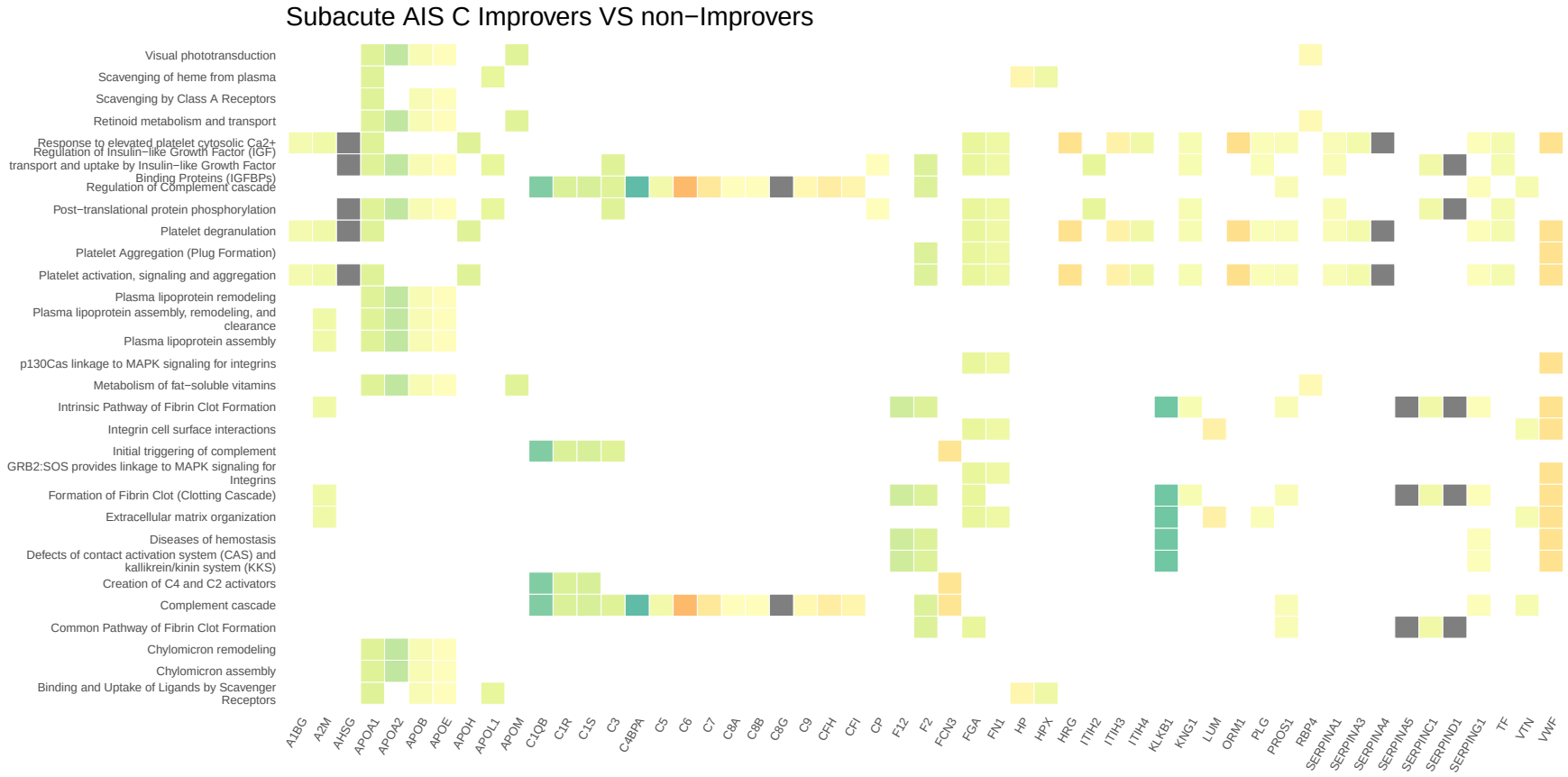

Figure 2: Heatmap denoting the $\log_2$ fold change of proteins in plasma collected 3-months post-injury, and the biological pathways these proteins are associated with on Reactome. This compares AIS C SCI patients who experienced an AIS grade improvement and those who did not.

Similarly to the iTRAQ data, many of the Reactome pathways are associated with the complement cascade and platelets activation (Figures 3, 4).

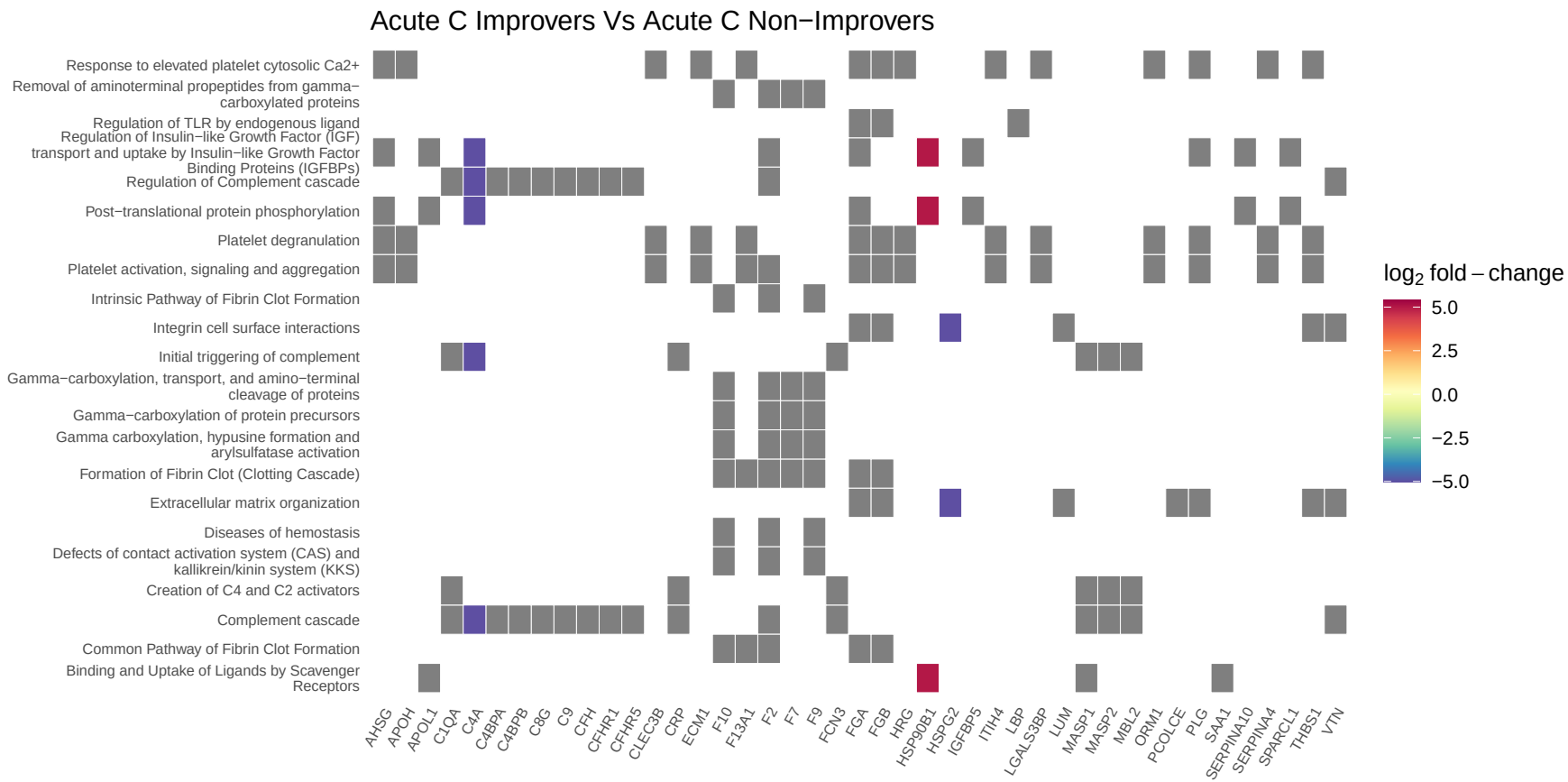

Figure 3: Heatmap denoting the $\log_2$ fold change of proteins in plasma collected 2-weeks post-injury, and the biological pathways these proteins are associated with on Reactome. This compares AIS C SCI patients who experienced an AIS grade improvement and those who did not. Grey blocks denote proteins not present in the comparison.

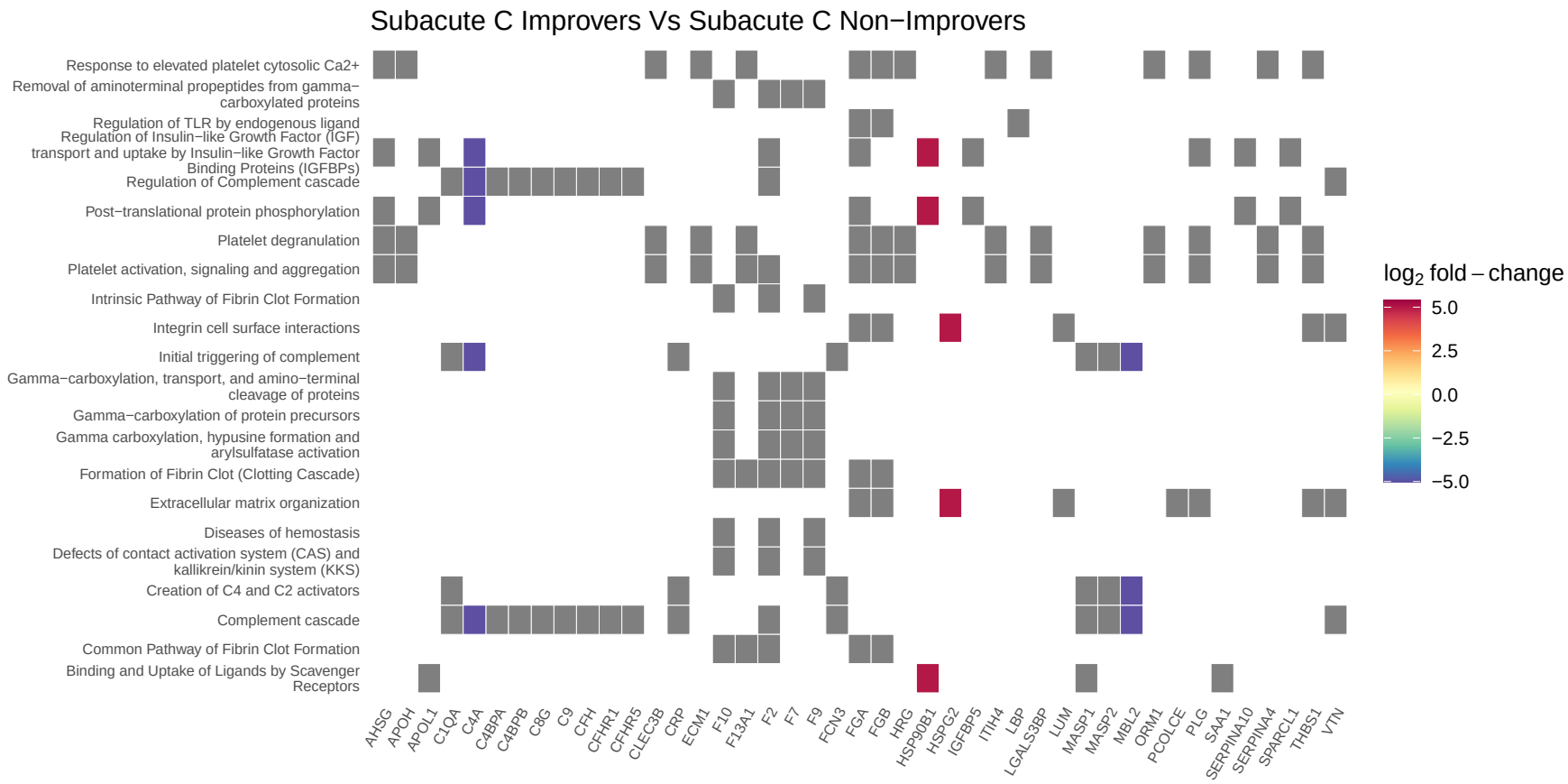

Figure 4: Heatmap denoting the $\log_2$ fold change of proteins in plasma collected 3-months post-injury, and the biological pathways these proteins are associated with on Reactome. This compares AIS C SCI patients who experienced an AIS grade improvement and those who did not. Grey blocks denote proteins not present in the comparison.

4.4 Network analysis of Differentially Abundant Proteins between AIS C improvers and non-improvers

Similar to the heatmaps, network plots highlighted that the majority of proteins changes were associated with the complement cascade and pathways linked to platelet activity (Figure 5, 6). Several proteins were also associated with the regulation of insulin-like growth factor.

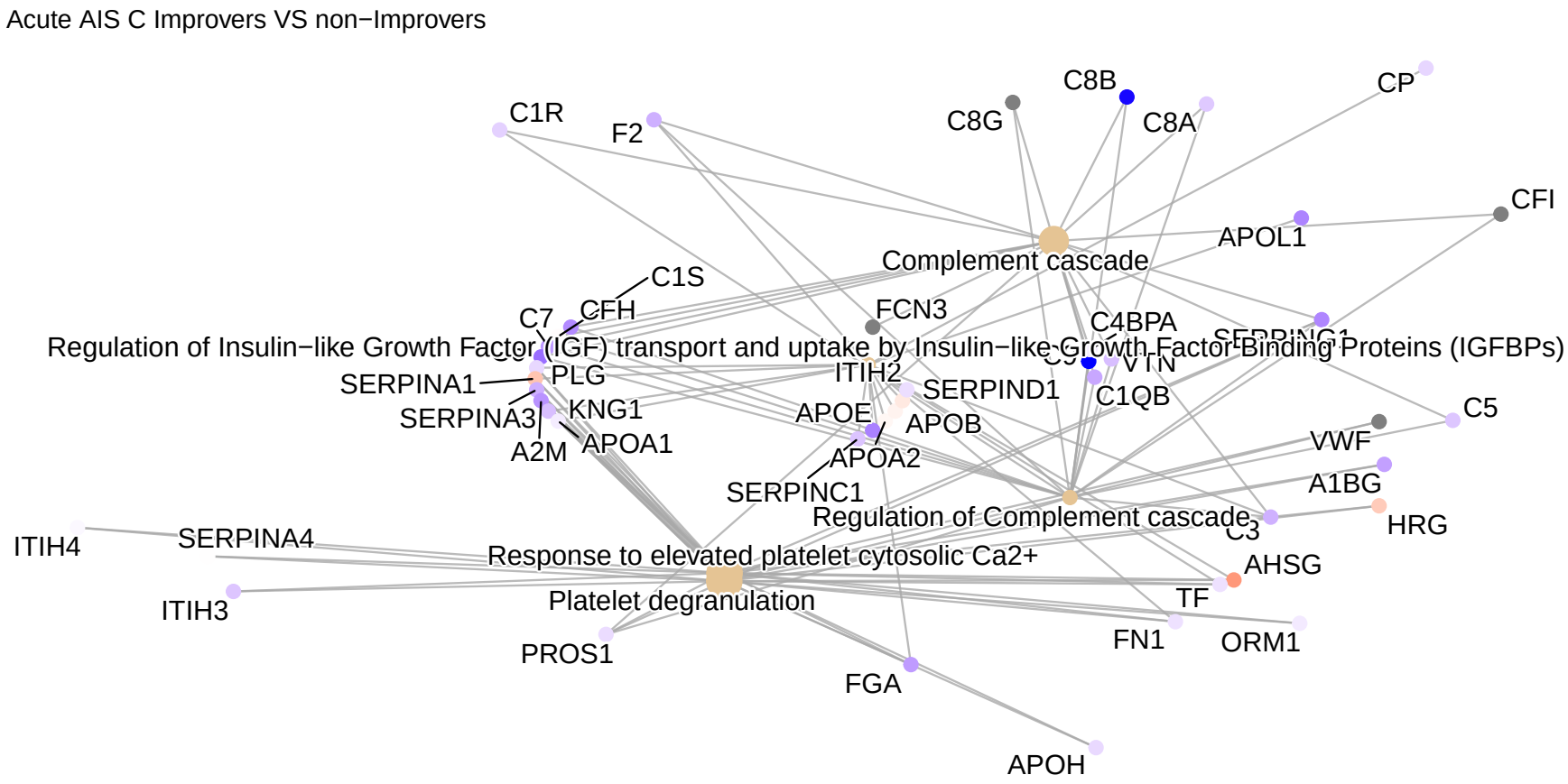

Figure 5: Network plot denoting the $\log_2$ fold change of proteins in plasma collected 2-weeks post-injury, and the biological pathways these proteins are associated with on Reactome. This compares AIS C SCI patients who experienced an AIS grade improvement and those who did not.

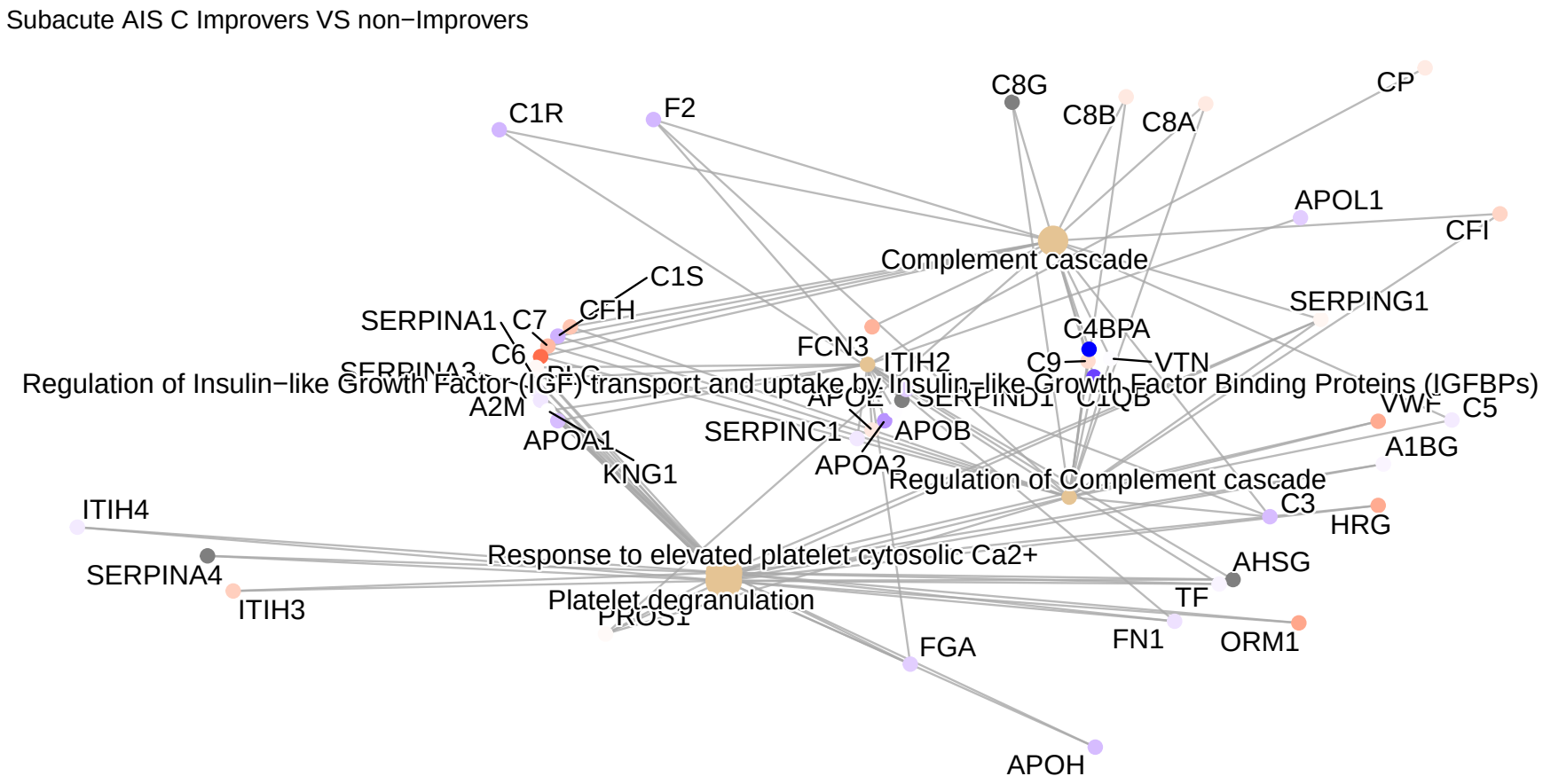

Figure 6: Network plot denoting the $\log_2$ fold change of proteins in plasma collected 3-months post-injury, and the biological pathways these proteins are associated with on Reactome. This compares AIS C SCI patients who experienced an AIS grade improvement and those who did not.

Similarly to the heatmaps and the iTRAQ data, network plots derived using the label-free data highlight the majority of differential proteins are associated with the complement cascade and pathways linked to platelets (Figures 7, 8).

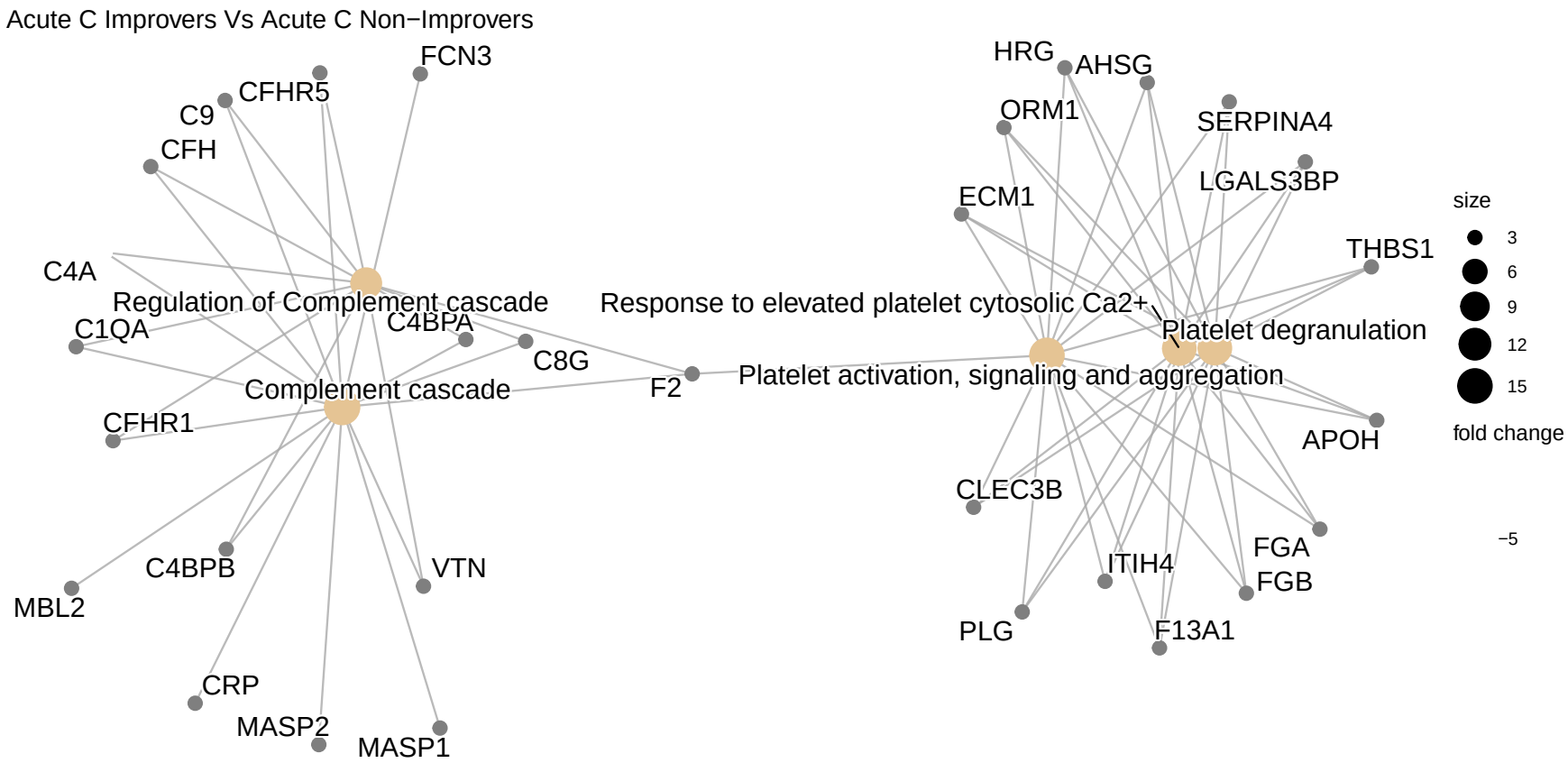

Figure 7: Network plot denoting the $\log_2$ fold change of proteins in plasma collected 2-weeks post-injury, and the biological pathways these proteins are associated with on Reactome. This compares AIS C SCI patients who experienced an AIS grade improvement and those who did not.

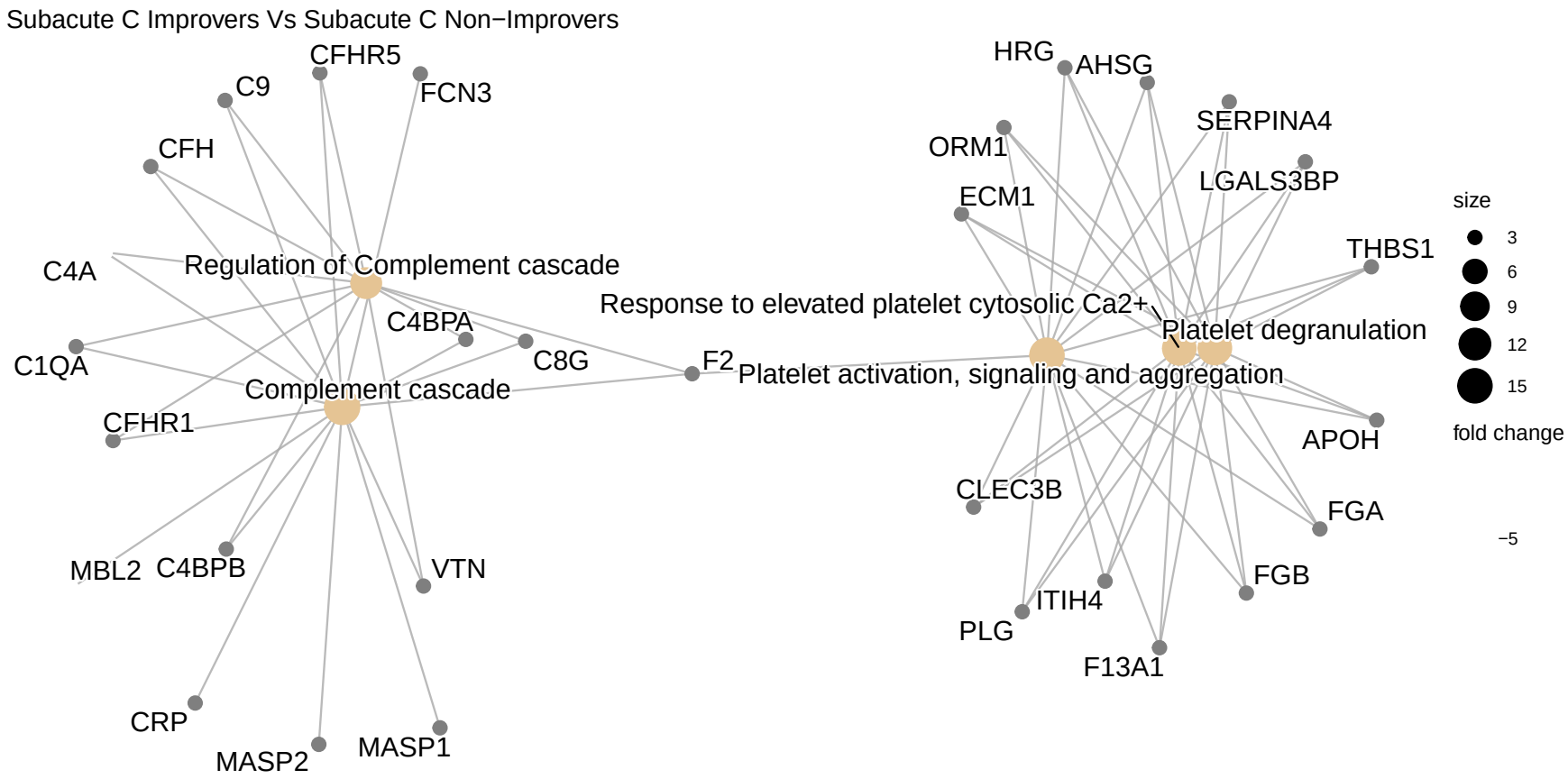

Figure 8: Network plot denoting the $\log_2$ fold change of proteins in plasma collected 3-months post-injury, and the biological pathways these proteins are associated with on Reactome. This compares AIS C SCI patients who experienced an AIS grade improvement and those who did not.

4.5 Pathway analysis of Differentially Abundant Proteins between AIS C improvers and non-improvers

Pathway analysis via the `pathview` R package returned the complement and coagulation cascade to be on the sole significant KEGG pathway to derive from the OpenMS analysed data. The majority of the proteins present in this pathway were less abundant in the 2-week post-injury plasma of AIS C patients who experienced an AIS grade conversion and those who did not (Figure 9).

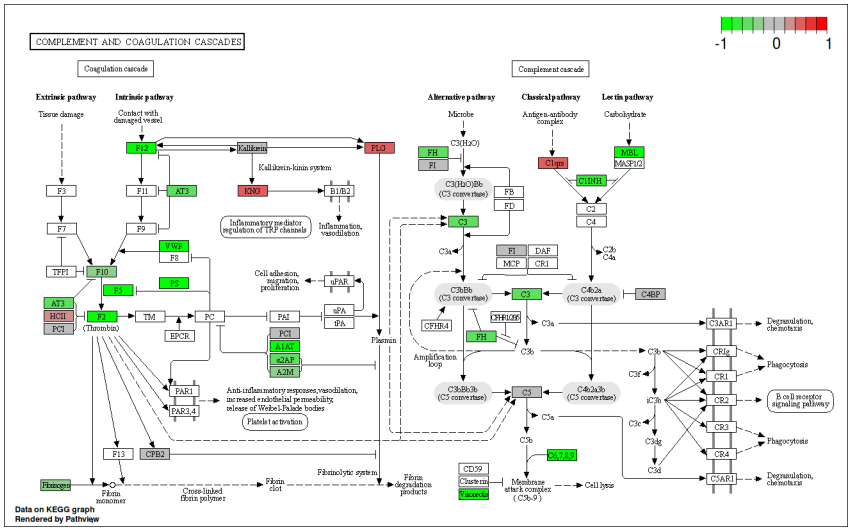

Figure 9: KEGG complement cascade pathway annotated with $\log_2$ fold change of proteins in plasma collected 2-weeks post-injury. This compares AIS C SCI patients who experienced an AIS grade improvement and those who did not.

Similarly to the iTRAQ pathway analysis, the label free data analysed via the pathview R package returned the complement and coagulation cascade to be the sole significant KEGG pathway derived from the OpenMS analysed data. The majority of the proteins present in this pathway were less abundant 2-weeks post-injury in the plasma of AIS C patients who experienced an AIS grade conversion than those who did not (Figure 10).

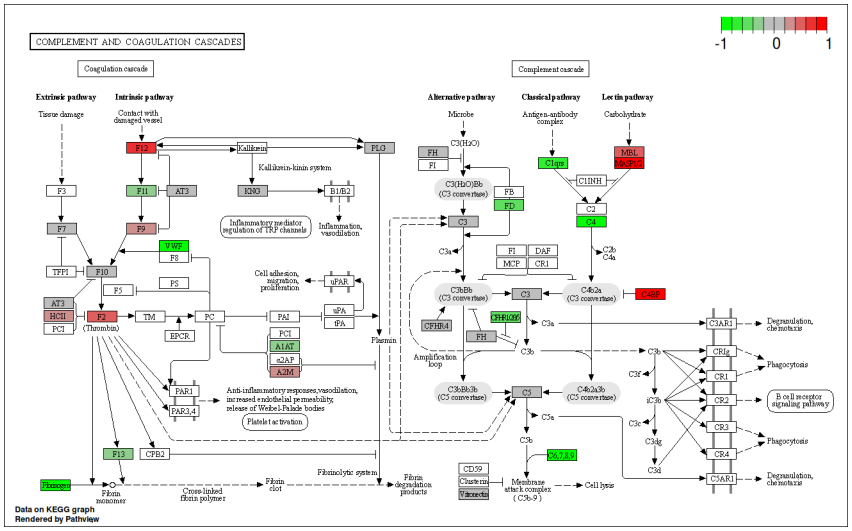

Figure 10: KEGG complement cascade pathway annotated with $\log_2$ fold change of proteins in plasma collected 2-weeks post-injury. This compares AIS C SCI patients who experienced an AIS grade improvement and those who did not.

4.6 Validation of Proteomic Data using ELISA

No statistically significant difference between groups for A2M abundance in plasma via DuoSet® ELISAs, though there were outliers in the AIS A and D groups, and particularly in the AIS C patients at 3-months who did not experience an AIS grade conversion (Figure 11).

A significant difference was found between AIS C non-improvers at 2-weeks and AIS D for SAA1, with outliers in AIS C non-improvers at 2-weeks, and both AIS C improvers and non-improvers at 3-months post-injury (Figure 11). For ApoA1 plasma abundance estimated via Quantikine® ELISAs, statistically significant differences were found between AIS C improvers at 2-weeks and both AIS C improvers and non-improvers at 3-months, AIS C 3-month improvers and AIS A and D, and AIS C 3-month non-improvers and AIS A and D (Figure 11). A statistically significant difference was also found between AIS C improvers and non-improvers at 2-weeks post-injury for RBP4 (Figure 11).

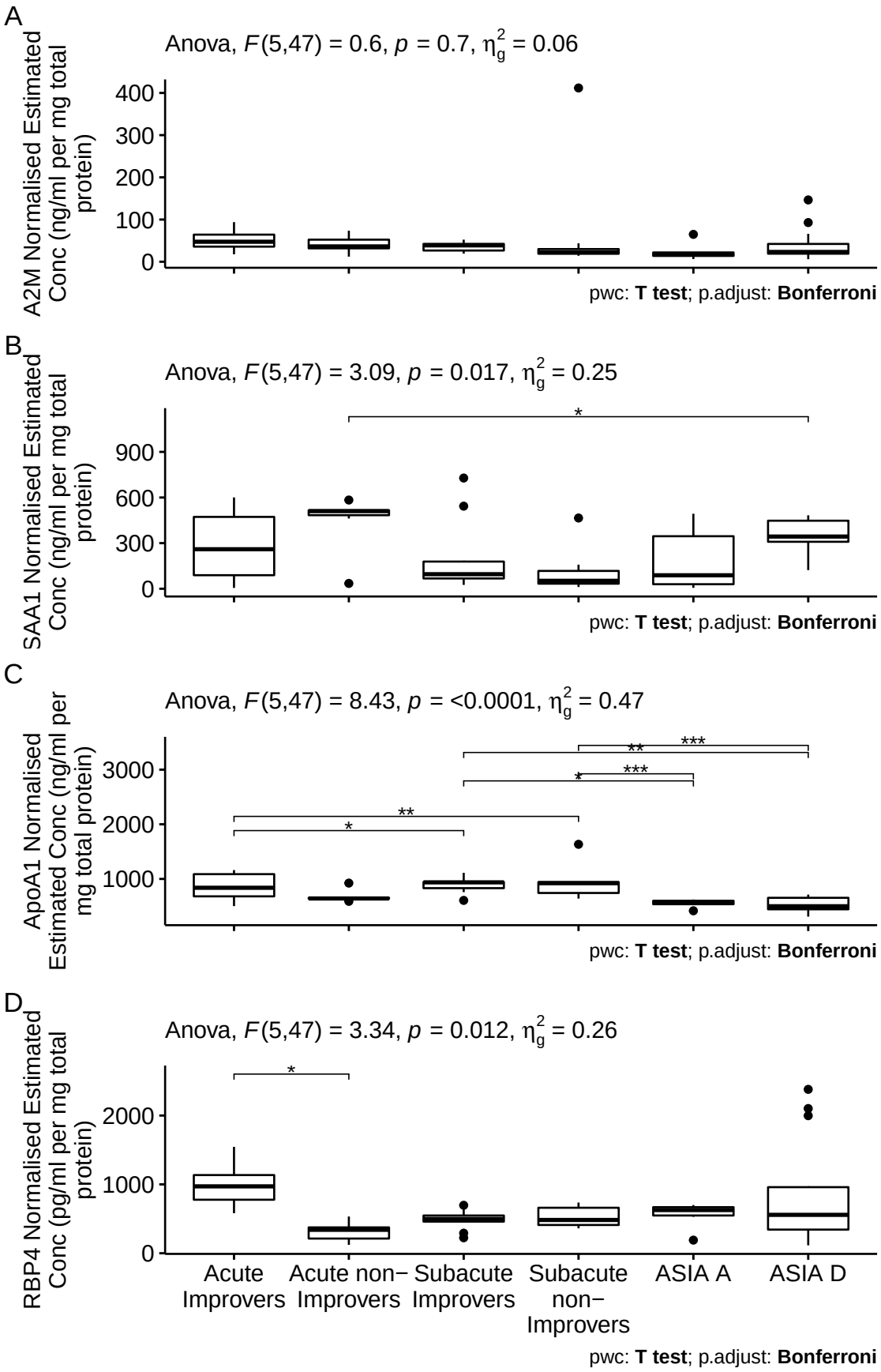

Figure 11: Normalised estimated concentration of α-2-macroglobulin (A), serum amyloid A1 (B), apolipoprotein A1 (C) and retinol binding protein 4 (D). Estimates were calculated from the optical density of a standard curve produced via a DuoSet® ELISA. Plasma from each patient that made up the pooled iTRAQ samples was assayed and pairwise t-tests with bonferroni adjusted P-values were performed to assess differential abundance.

4.7 Comparing iTRAQ and label-free proteins

A total of 87 and 79 unique proteins were identified across the label-free and iTRAQ experiments respectively, with a modest overlap of 26 proteins found using both techniques.

5 Discussion

This is the first study, to our knowledge, to investigate the plasma proteome in SCI patients whose AIS scores either improved or did not improve post injury and also to compare these to AIS grade A and D patients. We have used two proteomic techniques allowing us to profile both high and low abundance proteins, in order to identify protein candidate biomarkers which may have potential to predict neurological improvement within the acute setting. Moreover, this data can better inform us of the biology underlying neurological improvement or stability in a cohort of patients being conservatively managed post SCI.

Briefly, for processing of proteomic data, we compared the performance of the mass spectrometry vendor (ABSciex) provided ProteinPilot (version 4.5) and OpenMS (version 2.6.0). As there were only modest difference in both the proteins identified and the respective fold changes (data not shown), we opted to use OpenMS for the greater transparency and reproducibility it offers as open-source software.

This study has highlighted a number of proteins that may be able to discriminate in, the acute phase following injury, between AIS grade C patients who either improve or do not improve by an AIS grade following SCI. The most promising of these is Retinol Binding Protein 4 (RBP4) which was demonstrated to be increased in non-improvers compared to improvers in the acute phase. Further this change could be confirmed using ELISA, which may provide a more clinically useful means of assessment on a wide scale.

RBP4 is synthesised in the liver and binds retinol that is released following vitamin A deficiency.(Peterson 1971) Once delivered to target cells, retinol can either be converted to retinaldehyde, which is required for functional vision, or oxidised to retinoic acid, which is a ligand for nuclear receptors, thus regulating gene expression.(Lane and Bailey 2005; Balmer and Blomhoff 2002) The role of retinoid signalling in spinal cord and motor neuron differentiation, including development of regions of the spinal cord has been outlined, and implies a possible involvement in maintaining motor neuron integrity.(Colbert et al. 1995; Sockanathan and Jessell 1998) The mRNA of a rodent homologue of RBP was found to be up-regulated at 24 hours post-SCI and may promote cell proliferation and regeneration by increasing retinoid metabolism.(Song et al. 2001; Hurst et al. 1999)

Another study of amyotrophic lateral sclerosis (ALS), a neurodegenerative disease, comparing gene expression between post-mortem spinal cord samples of ALS and controls similarly observed up-regulation of RBP1 in ALS spinal cord.(Malaspina, Kaushik, and Belleroche 2001) Furthermore, a transgenic mouse study reported retinoid signalling may contribute to the retained plasticity and regenerative potential of the mature spinal cord.(Haskell et al. 2002) Collectively, these results might support a hypothesis that AIS C improvers have increased levels of RBP4 and this relates to improved capacity for neuronal regeneration/plasticity. Whether this is due to increased expression or due to higher vitamin A dietary intake is unclear from this data.

Alongside RBP4, a number of other protein abundance differences across the different biological comparisons were identified in proteins associated with liver function. Our previous work investigating the potential of routinely measured haematological analytes for predicting neurological outcome in SCI patients also highlighted several proteins that were linked with liver function; thus providing further support to the theory that liver status is relevant to differential functional recover.(Brown et al. 2019; Bernardo Harrington et al. 2020) The pathway analysis specifically indicated that the acute phase response (APR) is implicated.

The APR is the bodies first response to infection or injury, including SCI. This systemic response is largely coordinated by factors released from the liver, but the APRs effects extend to multiple peripheral organs including the kidneys, lungs and spleen.(Bao et al. 2012; Campbell, Zahid, et al. 2008; Fleming et al. 2012; Gris, Hamilton, and Weaver 2008) This hepatic response is typically transient and quickly fades, but prolonged liver inflammation and pathology has been observed in rodent SCI models.(Goodus et al. 2018; Sauerbeck et al. 2014) Basic liver functions are chronically impaired by SCI, including metabolising carbohydrates, fats and

proteins, storage of minerals vitamins and glycogen and filtering blood from the digestive tract.(García-López et al. 2007; DeLeve 2007; Farkas and Gater 2018; Chow et al. 2012; Sauerbeck et al. 2014)

The acute (1-7 days) liver response to SCI is well documented; the inflammatory cytokines including TNFα, IL-1α, IL-1β and IL-6, released at the injury site, reach the liver through the bloodstream.(Fleming et al. 2012; Hundt et al. 2011) This provokes the liver to enter the APR and produce acute phase proteins thus stimulating a greater immune response.(Anthony and Couch 2014; Fleming et al. 2012) The hepatocytes that make up the majority of the liver biomass, express receptors that bind the aforementioned inflammatory cytokines; similarly the hepatic macrophage Kupffer cells also bind these cytokines, complement proteins and lipopolysaccharide (LPS) and swiftly remove microorganisms, endotoxins and other debris from the blood.(Yang et al. 2013; Szalai et al. 2000; Crispe 2016; Campbell et al. 2005) Furthermore, it has been suggested that liver inflammation and Kupffer cells activity promote recruitment of leukocytes to the injury site in brain or spinal trauma, potentially enhancing CNS injury.(Anthony and Couch 2014; Campbell et al. 2005) For example, a rodent study demonstrated depletion of Kupffer cells prior to injury resulted in few neutrophils infiltrating the injury site.(Campbell, Zahid, et al. 2008; Campbell, Anthony, et al. 2008)

Another protein that out label-free proteomic data highlights is Peroxiredoxin 2 (PRX-2), which was detected acutely in AIS C improvers and AIS D patients, and subacutely in AIS A and AIS D. Peroxiredoxins are a large and highly conserved family of enzymes that reduce peroxides. PRX-2 is highly abundant in RBCs and intracellularly serves as an important anti-oxidant role in various cells types, including neurons.(Low, Hampton, and Winterbourn 2008) By contrast, extracellular PRX-2 has been suggested to act as an inflammatory DAMP, leading microglia and macrophages to release a plethora of pro-inflammatory factors.(Salzano et al. 2014; Garcia-Bonilla and Iadecola 2012; Shichita et al. 2012) An *in vitro* primary neurons and microglia co-culture study reported PRX-2 activating microglia via TLR-4, potentially leading to neuronal apoptosis.(Lu et al. 2018) A murine study found over-expression of PRX-2 attenuated oxidative stress and neuronal apoptosis following subarachnoid haemorrhage.(Lu et al. 2019) Over-expression of PRX-2 is speculated to protect again ischaemic neuronal injury by modulating the redox-sensitive thioredoxin-apoptosis signal-regulating kinase (ASK) 1 signalling complex.(Gan et al. 2012) Several molecular chaperones can interact with ASK1, including thioredoxin and TNF receptor-associated factor 6.(Matsuzawa et al. 2005) The dissociation of the thioredoxin-ASK1 complex activates ASK1. PRX-2 is oxidised after scavenging free radicals, whereupon its antioxidantive activity is reduced. This inactivation can be reversed by the thioredoxin-thioredoxin reductase system, whereby oxidised PRX-2 can regain its activity by reducing thioredoxin, leading to the dissociation of the thioredoxin-ASK1 complex.(Rhee and Woo 2011) Additionally, oxidised PRX-1 can inhibit ASK1-induced apoptosis via the thioredoxin-binding domain on ASK1.(Kim, Kim, and Lee 2008)

The presence of PRX-2 in acute AIS C improvers and absence in acute C non-improvers suggests the protein could indicate a more protective action against oxidative stress, and implies the protein has potential value as a biomarker of functional outcomes. Similarly, PRX-2 may be acting as a healthy response to trauma-induced oxidative stress in both acute AIS D, although the persistence to the subacute time-point is less clear. Likewise, the presence of PRX-2 in AIS A subacutely, but not acutely is more perplexing. It should be noted that as plasma was used and cells were lysed, there is no distinction between intracellular and extracellular PRX-2 in this data. Perhaps in the more severe AIS A injury, secondary injuries, including oxidative stress, are greater and so persist to the subacute time-point. The acute absence may be a result of an overwhelmed physiology unable to respond or prioritise managing oxidative stress.

Pathway analysis from both the iTRAQ and label-free experiments identified the complement and coagulation cascades as a significant pathway of interest. More broadly, the trend in this data is for proteins in the complement pathway is lower abundance, or inhibitory proteins such as C4BP to be more abundant, in the acute improvers. C3 for instance, cleavage of which is vital for complement activation, was less abundant in acute AIS C improvers relative to non-improvers. This finding is in line with a genetic C3 knockout study in mice which reported better neurological scores 2 days post-injury, reduced residual consolidated neurological deficit at 21 days and display minor change in reduced gliosis (20% decrease at 1h timepoint) but a three-to-fourfold decrease in neutrophil infiltration, resulting in enhanced regeneration of axons.(Qiao et al. 2006) Another study using a similar C3 knockout model reported improved neurological scores at acute and long-term time points.(Guo et al. 2010) These results imply that the complement cascade is a particularly important component of a differential response to neurological injury which ultimately leads to

greater functional recovery. Given the complexity of the complement cascade and the limited time points in this study, further work is needed to elucidate which facets of the cascade are outcome modifying, and at which stages post-injury.

AIS A and D samples were included largely to compare to the AIS C improvers. If the improvers were all just a less severe AIS C, we might expect them to be more similar to the AIS D samples, with the non-improvers being closer to the As. As this is not what we observed, we can conclude there is more to the differential functional recovery than initial injury severity.

The small number of statistically significant proteins speaks to the variability of human plasma samples, and is likely exacerbated by the inconstant timing of sample collection relative to injury. Thus, a repeat of this experiment with a larger sample size will likely reveal many more proteins of potential interest. Regardless, this study has highlighted RPB4 and PRX-2 as potential biomarkers of functional recover. We have also highlighted the complement cascade as being a particularly important pathway in differential recovery. Additional investigation of these proteins, but also the complement cascade more broadly, particularly at more acute time points, would also be valuable. Furthermore, a metabolomic analysis with a similar samples would greatly compliment this work, particularly with regards to investigating further links to the livers role in neurological recovery. Similarly, this additional work could complement the AIS A and D sample data, which may reveal further insights from this data.

Supplementary material

5.1 Session Information

```
##                _
## platform       aarch64-apple-darwin20
## arch           aarch64
## os             darwin20
## system         aarch64, darwin20
## status
## major          4
## minor          1.3
## year           2022
## month          03
## day            10
## svn rev        81868
## language       R
## version.string R version 4.1.3 (2022-03-10)
## nickname       One Push-Up
```

Table S1: Packages Used

package	version	date
base	4.1.3	2022-03-18
MSstats	4.2.0	2021-05-31
STRINGdb	2.6.5	2020-01-10
ReactomePA	1.38.0	2021-10-26
rlang	1.0.4	2022-07-12
bookdown	0.27	2022-06-14
lime	0.5.2	2021-02-24
RColorBrewer	1.1.3	2022-04-03
ggVennDiagram	1.2.0	2021-10-19
DiagrammeR	1.0.9	2022-03-04
lubridate	1.8.0	2021-10-03
patchwork	1.1.1	2020-12-15
cowplot	1.1.1	2020-12-15
readxl	1.4.0	2022-03-28
BiocManager	1.30.18	2022-05-18
knitr	1.39	2022-04-26
rmarkdown	2.14	2022-04-25
data.table	1.14.2	2021-09-23
naniar	0.6.1	2021-05-14
psych	2.2.5	2022-05-01
Hmisc	4.7.0	2022-04-12
Formula	1.2.4	2020-10-16
survival	3.3.1	2022-02-20
lattice	0.20.45	2021-09-18
bibtex	0.4.2.3	2020-09-19
captioner	2.2.3	2015-07-15
forcats	0.5.1	2021-01-27
stringr	1.4.0	2019-02-09
dplyr	1.0.9	2022-04-27
purrr	0.3.4	2020-04-16
readr	2.1.2	2022-01-30
tidyr	1.2.0	2022-01-27
tibble	3.1.7	2022-04-26
ggplot2	3.3.6	2022-04-27
tidyverse	1.3.1	2021-04-15
kableExtra	1.3.4	2021-02-19

Table S2: OpenMS $\log_2$ fold changes in the plasma proteome of SCI patients from iTRAQ experiments. 'Acute' and 'Subacute' samples collected within 2 week and approximately 3-months post-injury respectively.

gene	Acute AIS C improvers vs non-improvers	Subacute AIS C improvers vs non-improvers	AIS C improvers acute vs subacute	AIS C non-improvers acute vs subacute	AIS C improvers vs non-improvers	AIS A vs D	AIS C improvers vs A	AIS C improvers vs D	AIS C non-improvers vs A	AIS C non-improvers vs D
A1BG	-0.9032	-0.1018	-0.6088	0.1926	0.2253	0.7937	-0.3498	0.4440	-0.5750	0.2187
A2M	-1.0386	-0.2464	-0.6761	0.1161	-1.2301	1.4248	-1.6030	-0.1782	-0.3729	1.0519
AFM	-0.3788	-1.2249	0.4815	-0.3645	0.5518	1.1924	-1.2566	-0.0642	-1.8084	-0.6160
AHSG	1.1795		-0.5545							
AMBP	0.6562	-0.3433	0.8607	-0.1389	-0.9023		1.2038		2.1061	
APCS	0.1498	0.2109	-0.0114	0.0497		0.3557			-0.0495	0.3063
APOA1	-0.1817	-0.6924	-0.2338	-0.7444	-0.7677	0.6941	-1.3173	-0.6232	-0.5496	0.1446
APOA2	0.0900	-1.1461	-0.6668	-1.9029						
APOA4	0.1296	0.9637	-1.2313	-0.3972	-1.3254	0.7876	-1.3347	-0.5471	-0.0093	0.7783
APOB	0.1379	-0.0164	-0.6333	-0.7876	-0.8570	0.5260	-1.2346	-0.7086	-0.3775	0.1485
APOE	-1.2134	0.2931	-0.6884	0.8180	-0.9078	0.7747	-1.5477	-0.7731	-0.6399	0.1347
APOH	-0.3602	-0.7025	-0.6445	-0.9867	-0.9997	2.8144	-1.0092	1.8052	-0.0095	2.8048
APOL1	-1.1791	-0.5194	-1.0440	-0.3843	-0.1153	0.5653	0.1299	0.6952	0.2452	0.8105
APOM	-1.2168	-0.6820	0.6935	1.2283		0.6562			0.6665	1.3227
ATRN			-1.0063							
AZGP1	1.2192	1.0252	0.0811	-0.1129	-3.3890	-3.6441	0.3703	-3.2738	3.7592	0.1152
C1QB	-0.8410	-2.0020	0.7071	-0.4539	-1.9729	1.3563	-2.0066	-0.6503	-0.0337	1.3226
C1R	-0.4335	-0.7632	0.0366	-0.2931	-0.1467	0.7976	0.3564	1.1540	0.5032	1.3008
C1S	0.0295	-0.8194	0.1680	-0.6809						
C2					-2.5581	2.5641	-2.5953	-0.0312	-0.0372	2.5269
C3	-0.7441	-0.6969	0.0652	0.1124	-1.0731	1.2388	-2.1616	-0.9228	-1.0886	0.1503
C4BPA	-0.1810	-2.4455	1.6628	-0.6017	-1.2379	1.5490	-1.8449	-0.2959	-0.6070	0.9420
C5	-0.5448	-0.2031	0.9230	1.2647	-0.7200	1.2710	-1.6769	-0.4058	-0.9569	0.3142
C6	-1.3936	1.7817	-1.3097	1.8656	-3.0452	1.7642	-3.2550	-1.4908	-0.2098	1.5544
C7	-0.9642	0.8848	-0.7827	1.0663	0.9970	0.0709	-1.1136	-1.0428	-2.1107	-2.0398
C8A	-0.5118	0.2737	-0.7630	0.0224	-2.8108	0.1731	-2.1285	-1.9554	0.6823	0.8554
C8B	-2.1950	0.2789	-1.5955	0.8785	-1.8944	-0.4803	-0.9598	-1.4400	0.9346	0.4544
C8G			-1.6305							
C9	-2.2199	0.4534	-1.9250	0.7483	-0.7346	0.6496	-3.2424	-2.5928	-2.5078	-1.8583
CD5L	-0.9293	-0.6205	-0.7146	-0.4057	-2.4643	0.4483	-2.3260	-1.8778	0.1383	0.5865
CFH	-1.1240	0.7407	-1.6481	0.2166	-1.0359	0.1380	-1.3260	-1.1880	-0.2902	-0.1522
CFI		0.5360		1.2578						
CLU	-1.1959	-0.8682	-0.1722	0.1555	-1.3664	0.8252	-2.1976	-1.3724	-0.8312	-0.0060
CP	-0.3892	0.2565	-0.4537	0.1920	-0.6658	0.4235	-0.2696	0.1540	0.3962	0.8197
F12	0.4852	-0.9398	0.6703	-0.7547	-0.8534	0.5550	-1.3146	-0.7596	-0.4612	0.0938
F2	-0.7493	-0.7564	0.0983	0.0912	-0.5409	1.1677	-1.5476	-0.3799	-1.0067	0.1610
FCN3		0.9645								
FGA	-0.9591	-0.5109	0.4842	0.9324	-1.0156	1.0487	-1.4708	-0.4221	-0.4552	0.5934
FGB	-0.8339	-0.1254	0.0684	0.7770	-0.8343	1.0951	-1.4647	-0.3695	-0.6303	0.4648
FGG	-1.1433	-0.0247	-0.2978	0.8208	-0.7191	0.7607	-1.0780	-0.3173	-0.3589	0.4018
FN1	-0.2796	-0.3153	0.2899	0.2541	-0.5778	1.1463	-1.2551	-0.1088	-0.6773	0.4690
GC	-0.5583	0.4051	-0.7950	0.1684	-1.8700	-0.2961	-1.2641	-1.5602	0.6059	0.3098
GSN	0.0705	0.0479	-0.6710	-0.6935						
HABP2					-0.5367	1.4446	-0.7071	0.7375	-0.1704	1.2742
HP	-1.2469	0.5276	-0.3488	1.4257	-0.6394	0.9683	-1.2963	-0.3280	-0.6570	0.3114
HPX	-0.4105	-0.2881	-0.7115	-0.5891	-0.3598	0.9360	-1.1034	-0.1674	-0.7437	0.1924
HRG	0.5979	1.0673	0.0322	0.5015	-0.7301	0.6894	-0.8232	-0.1338	-0.0931	0.5963
IGHA1	1.7636	1.3477	0.3629	-0.0530	-2.0152	0.4328	-2.2081	-1.7753	-0.1929	0.2399
IGHD					-2.4500	0.4182	-3.4285	-3.0102	-0.9785	-0.5603
IGHG1	-0.0855	0.9292	-0.4963	0.5184	-0.0970	-1.8091	0.4814	-1.3277	0.5785	-1.2306

Table S2: OpenMS $\log_2$ fold changes in the plasma proteome of SCI patients from iTRAQ experiments. 'Acute' and 'Subacute' samples collected within 2 week and approximately 3-months post-injury respectively. *(continued)*

gene	Acute AIS C improvers vs non-improvers	Subacute AIS C improvers vs non-improvers	AIS C improvers acute vs subacute	AIS C non-improvers acute vs subacute	AIS C improvers vs non-improvers	AIS A vs D	AIS C improvers vs A	AIS C improvers vs D	AIS C non-improvers vs A	AIS C non-improvers vs D
IGHG2	0.9720	0.3502	0.4608	-0.1611	-0.6249	-1.5107	0.2705	-1.2401	0.8955	-0.6152
IGHG3	-0.1942	1.4323	-0.9310	0.6955	-1.8544	-0.3927	-1.8870	-2.2798	-0.0327	-0.4254
IGHM	-0.6318	-0.8967	-0.4175	-0.6824	-1.1742	1.7916	-2.3509	-0.5593	-1.1767	0.6149
IGKC	-0.0697	0.0420	-0.1150	-0.0032	-1.1868	-0.2875	-1.1765	-1.4641	0.0103	-0.2772
IGKV3D-20					-0.3699	-0.0537	0.2115	0.1578	0.5814	0.5277
ITIH1	-0.9767	0.7057	-0.5212	1.1612	-0.6149	0.5496	-0.5039	0.0456	0.1110	0.6605
ITIH2	-0.3143	-0.5283	-0.2363	-0.4504	-0.7432	0.6757	-1.2137	-0.5379	-0.4705	0.2052
ITIH3	-0.5456	0.6139	0.3513	1.5108	-2.0564	1.2902	-1.8743	-0.5841	0.1821	1.4724
ITIH4	-0.0670	-0.2189	0.3809	0.2289	-1.0844	0.9773	-1.8198	-0.8425	-0.7355	0.2418
KLKB1		-2.2093		-0.2714						
KNG1	-0.6198	-0.0025	-0.0676	0.5497	-0.6644	0.8053	0.0312	0.8365	0.6956	1.5009
LRG1	-0.7988	0.2565	0.1402	1.1955	-0.9516	1.7018	-2.1951	-0.4933	-1.2435	0.4583
LUM	0.0832	0.6580	-1.2636	-0.6888						
ORM1	-0.1975	1.1178	-0.2240	1.0913	-1.9126	1.6761	-1.3026	0.3735	0.6100	2.2862
PGLYRP2										
PLG	-0.3680	0.0881	-0.8410	-0.3850	-1.0702	2.7112	-2.8493	-0.1381	-1.7792	0.9321
PROS1	-0.3301	0.0624	-0.7963	-0.4039	-0.5090	1.5350	-3.8745	-2.3396	-3.3656	-1.8306
RBP4	0.4506	0.4186	-0.0212	-0.0532	-4.0971	1.4352	-2.9877	-1.5525	1.1094	2.5446
SAA1	-2.7778	2.3464	-0.5152	4.6090	-1.3859	2.4855	-2.5594	-0.0739	-1.1735	1.3120
SERPINA1	0.6826	0.0482	1.7824	1.1481	-0.0999	-0.1559	-1.3635	-1.5194	-1.2636	-1.4195
SERPINA3	-0.7582	-0.1618	0.1837	0.7802	-0.7418	2.2311	-2.0353	0.1958	-1.2936	0.9375
SERPINA4	0.0099		-1.0180		-1.4474		-0.6572		0.7902	
SERPINA5				0.2757						
SERPINC1	-0.5553	-0.2339	-0.5421	-0.2207	-0.7720	1.1067	-1.3465	-0.2398	-0.5744	0.5322
SERPIND1	0.2536		0.0459		0.3050	2.3844	-1.6469	0.7375	-1.9519	0.4325
SERPING1	-1.1615	0.1192	-1.3511	-0.0705	-0.9302	1.0767	-1.0905	-0.0138	-0.1603	0.9164
TF	-0.2824	-0.1105	-0.4844	-0.3125	-0.7682	0.5876	-0.9946	-0.4070	-0.2264	0.3612
VTN	-0.6186	-0.0324	-0.2690	0.3172	-1.7235	1.4919	-2.1518	-0.6599	-0.4283	1.0636
VWF		1.0586		1.3918	-2.5663	0.5162	-1.9774	-1.4612	0.5889	1.1051

Table S3: OpenMS $\log_2$ fold changes in the plasma proteome of SCI patients from label-free experiments. 'Acute' and 'Subacute' samples collected within 2 week and approximately 3-months post-injury respectively.

Protein	Acute A Vs Subacute D	Acute C Improvers Vs Subacute D	Acute C Improvers Vs Subacute A	Acute C Non-Improvers Vs Subacute A	Acute A Vs Acute C Improvers	Acute A Vs Subacute C Non-Improvers	Acute A Vs Subacute A	Acute A Vs Subacute C Improvers	Acute C Non-Improvers Vs Subacute D
AFM		-0.7786		-1.1371					-1.3604
AHSG		-2.7643	-3.4309	-3.3017			-1.9761		
APOA4	-1.0588					-1.2657		-1.1544	
APOC3					-1.4275	-1.6878			
APOH		-1.3700							-1.5614
APOL1							-0.8923		
AQR								0.6965	
C4BPA		1.2058							
C4BPB		1.3009						1.3841	
C8G		-1.2253	-1.0543		1.1118				
C9	1.4444	1.0533				1.0217		1.2553	1.3765
CFH	0.5112	0.5790							
CFHR1		0.9812						1.4700	
CFHR5	1.3097								
CLEC3B	-1.9123	-1.5100				-1.4447		-1.3585	-1.6640
COMP		-2.2269	-2.8311	-2.3546			-2.4495		
CRP	4.0520					3.8525			3.3381
ECM1		-1.8865							
F10		1.1353							
F13A1	-2.0331	-1.9770	-1.9454			-1.8768	-2.0015	-2.0606	
F2		1.0044	0.8140						
F7					-0.7634				
F9		1.0227							
FCN3						-1.1449		-0.9483	
FGA	1.0806	0.7180				1.0275		0.7479	1.0928
FGB	0.7119	0.5186		0.7340		0.7738		0.5500	0.9761
FGL1	2.5544					2.5246		2.4956	
GPLD1					-1.4430				
GPX3	0.8877	0.7335							
HABP2	0.9940	1.1355							
HRG	-0.6336								
HYI							-1.0768		
IGHG2		-1.8011							
IGHG4			-2.2253	-2.6735					
IGLV3-19			-1.9672						
ITIH1						-1.0172			
ITIH4	1.9473	3.9089	0.8010	0.8216			0.8095	1.3021	1.4555
LBP	2.0666					1.6765	1.7122	1.8745	1.6204
LGALS3BP			1.9633						
LUM	-1.3539	-1.2002	-1.2800	-1.4246		-1.6006	-1.4338	-1.1914	-1.3447
LYZ				1.2935					
MASP1		0.9681			-1.0112				
MASP2		0.9549	0.9501						
ORM1		-1.2827			1.2451				
PCOLCE	-1.9201				-1.7506				
PGLYRP2	-1.2799	-0.9299	-1.1251	-1.4588		-1.4051	-1.4751	-1.2655	-1.2637
PLG		0.3879						0.3532	
PRG4	1.8915	1.9399	1.7628			1.4891	1.7144	1.3478	
RNASE4			4.3884				3.9924		
SAA1	5.4086					4.5431		3.6939	4.3015

Table S3: OpenMS $\log_2$ fold changes in the plasma proteome of SCI patients from label-free experiments. 'Acute' and 'Subacute' samples collected within 2 week and approximately 3-months post-injury respectively. *(continued)*

Protein	Acute A Vs Subacute D	Acute C Improvers Vs Subacute D	Acute C Improvers Vs Subacute A	Acute C Non-Improvers Vs Subacute A	Acute A Vs Acute C Improvers	Acute A Vs Subacute C Non-Improvers	Acute A Vs Subacute A	Acute A Vs Subacute C Improvers	Acute C Non-Improvers Vs Subacute D
SAA2					4.4465				
SERPINA10		0.9102							
SERPINA4	-1.8496	-1.2216		-1.3820		-1.9414	-1.5613	-1.3615	-1.6703
SERPINF1	-1.1883								
THBS1			2.8162						
Trypsin		-0.5747							
VTN		0.7175	0.6959					0.7629	

Table S4: OpenMS $\log_2$ fold changes in the plasma proteome of SCI patients from label-free experiments. 'Acute' and 'Subacute' samples collected within 2 week and approximately 3-months post-injury respectively.

Protein	Acute D Vs Subacute A	Acute C Improvers Vs Subacute C Improvers	Acute C Non-Improvers Vs Subacute C Non-Improvers	Acute C Non-Improvers Vs Subacute C Improvers	Acute D Vs Subacute D	Acute A Vs Acute D	Acute C Improvers Vs Subacute C Non-Improvers	Acute D Vs Subacute C Improvers	Acute D Vs Subacute C Non-Improvers
AFM			-1.216	-1.0952					
AHSG	-2.441								
APOH					-1.754				
C1QA				1.4061					
C4BPA		1.1610							
C4BPB		1.7228							
C9		0.8642		1.1875					
CFHR1		1.5119		1.5921					
COMP	-3.071								
CRP			3.139						
F13A1		-2.0045							
F2		1.0382							
F9		0.9526							
FGA			1.040						
FGB			1.038	0.8142					
FGL1						2.371			
GPLD1						-1.266			
HABP2		1.0118							
IGLV3-19	-2.495								
ITIH4					1.356				
LUM	-1.280	-1.0377	-1.591	-1.1822	-1.200		-1.447	-1.038	-1.447
PGLYRP2		-0.9155	-1.389	-1.2493					
PLG		0.4401							
PRG4		1.3963							
RNASE4	4.339								
SERPINA4			-1.762			-1.245			
VTN		0.9532		0.7628					

References

Anthony, Daniel C., and Yvonne Couch. 2014. "The Systemic Response to CNS Injury." *Experimental Neurology*, Special Issue: Neuroimmunology of spinal cord injury, 258 (August): 105–11. https://doi.org/10.1016/j.expneurol.2014.03.013.

Balmer, James E., and Rune Blomhoff. 2002. "Gene Expression Regulation by Retinoic Acid." *Journal of Lipid Research* 43 (11): 1773–1808. https://doi.org/10.1194/jlr.R100015-JLR200.

Bao, Feng, Vanessa Omana, Arthur Brown, and Lynne C. Weaver. 2012. "The Systemic Inflammatory Response After Spinal Cord Injury in the Rat Is Decreased by a4B1 Integrin Blockade." *Journal of Neurotrauma* 29 (8): 1626–37. https://doi.org/10.1089/neu.2011.2190.

Bernardo Harrington, Gabriel Mateus, Paul Cool, Charlotte Hulme, Aheed Osman, Joy Chowdhury, Naveen Kumar, Srinivasa Budithi, and Karina Wright. 2020. "Routinely Measured Haematological Markers Can Help to Predict AIS Scores Following Spinal Cord Injury." *Journal of Neurotrauma*, July. https://doi.org/10.1089/neu.2020.7144.

Boschetti, Egisto, and Pier Giorgio Righetti. 2008. "The ProteoMiner in the Proteomic Arena: A Non-Depleting Tool for Discovering Low-Abundance Species." *Journal of Proteomics*, Proteomic Technologies, 71 (3): 255–64. https://doi.org/10.1016/j.jprot.2008.05.002.

Brown, Sharon J., Gabriel M. B. Harrington, Charlotte H. Hulme, Rachel Morris, Anna Bennett, Wai-Hung Tsang, Aheed Osman, Joy Chowdhury, Naveen Kumar, and Karina T. Wright. 2019. "A Preliminary Cohort Study Assessing Routine Blood Analyte Levels and Neurological Outcome After Spinal Cord Injury." *Journal of Neurotrauma*, July. https://doi.org/10.1089/neu.2019.6495.

Campbell, Sandra J., Daniel C. Anthony, Fiona Oakley, Harald Carlsen, Ahmed M. Elsharkawy, Rune Blomhoff, and Derek A. Mann. 2008. "Hepatic Nuclear Factor kB Regulates Neutrophil Recruitment to the Injured Brain." *Journal of Neuropathology & Experimental Neurology* 67 (3): 223–30. https://doi.org/10.1097/NEN.0b013e3181654957.

Campbell, Sandra J., V. Hugh Perry, Fernando J. Pitossi, Angus G. Butchart, Mariela Chertoff, Sara Waters, Robert Dempster, and Daniel C. Anthony. 2005. "Central Nervous System Injury Triggers Hepatic CC and CXC Chemokine Expression That Is Associated with Leukocyte Mobilization and Recruitment to Both the Central Nervous System and the Liver." *The American Journal of Pathology* 166 (5): 1487–97. https://doi.org/10.1016/S0002-9440(10)62365-6.

Campbell, Sandra J., Imran Zahid, Patrick Losey, Shing Law, Yanyan Jiang, Mehmet Bilgen, Nico van Rooijen, Damineh Morsali, Andrew E. M. Davis, and Daniel C. Anthony. 2008. "Liver Kupffer Cells Control the Magnitude of the Inflammatory Response in the Injured Brain and Spinal Cord." *Neuropharmacology* 55 (5): 780–87. https://doi.org/10.1016/j.neuropharm.2008.06.074.

Chambers, Matthew C., Brendan Maclean, Robert Burke, Dario Amodei, Daniel L. Ruderman, Steffen Neumann, Laurent Gatto, et al. 2012. "A Cross-Platform Toolkit for Mass Spectrometry and Proteomics." *Nature Biotechnology* 30 (10): 918–20. https://doi.org/10.1038/nbt.2377.

Choi, Meena, Ching-Yun Chang, Timothy Clough, Daniel Broudy, Trevor Killeen, Brendan MacLean, and Olga Vitek. 2014. "MSstats: An R Package for Statistical Analysis of Quantitative Mass Spectrometry-Based Proteomic Experiments." *Bioinformatics* 30 (17): 2524–26. https://doi.org/10.1093/bioinformatics/btu305.

Chow, Diana S. L., Yang Teng, Elizabeth G. Toups, Bizhan Aarabi, James S. Harrop, Christopher I. Shaffrey, Michele M. Johnson, et al. 2012. "Pharmacology of Riluzole in Acute Spinal Cord Injury." *Journal of Neurosurgery: Spine* 17 (Suppl1): 129–40. https://doi.org/10.3171/2012.5.AOSPINE12112.

Colbert, Melissa C., William W. Rubin, Elwood Linney, and Anthony-Samuel LaMantia. 1995. "Retinoid signaling and the generation of regional and cellular diversity in the embryonic mouse spinal cord." *Developmental Dynamics* 204 (1): 1–12. https://doi.org/10.1002/aja.1002040102.

Crispe, Ian N. 2016. "Hepatocytes as Immunological Agents." *The Journal of Immunology* 196 (1): 17–21. https://doi.org/10.4049/jimmunol.1501668.

Crozier-Shaw, Geoff, Hazel Denton, and Seamus Morris. 2020. "Management Strategies in Acute Traumatic Spinal Cord Injury: A Narrative Review." *Neuroimmunology and Neuroinflammation* 7 (September). https://doi.org/10.20517/2347-8659.2019.005.

DeLeve, Laurie D. 2007. "Hepatic Microvasculature in Liver Injury." *Seminars in Liver Disease* 27 (04): 390–400. https://doi.org/10.1055/s-2007-991515.

Eng, Jimmy K., Tahmina A. Jahan, and Michael R. Hoopmann. 2013. "Comet: An Open-Source MS/MS

Sequence Database Search Tool." *PROTEOMICS* 13 (1): 22–24. https://doi.org/10.1002/pmic.201200439.

Farkas, Gary J., and David R. Gater. 2018. "Neurogenic Obesity and Systemic Inflammation Following Spinal Cord Injury: A Review." *The Journal of Spinal Cord Medicine* 41 (4): 378–87. https://doi.org/10.1080/10790268.2017.1357104.

Fleming, Jennifer C., Christopher S. Bailey, Hans Hundt, Kevin R. Gurr, Stewart I. Bailey, Gediminas Cepinskas, Abdel-rahman Lawendy, and Amit Badhwar. 2012. "Remote Inflammatory Response in Liver Is Dependent on the Segmental Level of Spinal Cord Injury." *Journal of Trauma and Acute Care Surgery* 72 (5): 1194–1201. https://doi.org/10.1097/ta.0b013e31824d68bd.

Frost, Frederick, Mary Jo Roach, Irving Kushner, and Peter Schreiber. 2005. "Inflammatory C-reactive Protein and Cytokine Levels in Asymptomatic People with Chronic Spinal Cord Injury." *Archives of Physical Medicine and Rehabilitation* 86 (2): 312–17. https://doi.org/10.1016/j.apmr.2004.02.009.

Fuller, Heidi R., Robert Slade, Nataša Jovanov-Milošević, Mirjana Babić, Goran Sedmak, Goran Šimić, Matthew A. Fuszard, Sally L. Shirran, Catherine H. Botting, and Monte A. Gates. 2015. "Stathmin Is Enriched in the Developing Corticospinal Tract." *Molecular and Cellular Neuroscience* 69 (November): 12–21. https://doi.org/10.1016/j.mcn.2015.09.003.

Furlan, Julio C, Sivakumar Gulasingam, and B Catharine Craven. 2017. "The Health Economics of the Spinal Cord Injury or Disease Among Veterans of War : A Systematic Review." *The Journal of Spinal Cord Medicine* 40 (6): 649–64. https://doi.org/10.1080/10790268.2017.1368267.

Gan, Yu, Xunming Ji, Xiaoming Hu, Yumin Luo, Lili Zhang, Peiying Li, Xiangrong Liu, et al. 2012. "Transgenic Overexpression of Peroxiredoxin-2 Attenuates Ischemic Neuronal Injury Via Suppression of a Redox-Sensitive Pro-Death Signaling Pathway." *Antioxidants & Redox Signaling* 17 (5): 719–32. https://doi.org/10.1089/ars.2011.4298.

Garcia-Bonilla, Lidia, and Costantino Iadecola. 2012. "Peroxiredoxin Sets the Brain on Fire After Stroke." *Nature Medicine* 18 (6): 858–59. https://doi.org/10.1038/nm.2797.

García-López, P., A. Martínez-Cruz, G. Guízar-Sahagún, and G. Castañeda-Hernández. 2007. "Acute Spinal Cord Injury Changes the Disposition of Some, but Not All Drugs Given Intravenously." *Spinal Cord* 45 (9): 603–8. https://doi.org/10.1038/sj.sc.3102001.

Goodus, Matthew T., Andrew D. Sauerbeck, Phillip G. Popovich, Richard S. Bruno, and Dana M. McTigue. 2018. "Dietary Green Tea Extract Prior to Spinal Cord Injury Prevents Hepatic Iron Overload but Does Not Improve Chronic Hepatic and Spinal Cord Pathology in Rats." *Journal of Neurotrauma* 35 (24): 2872–82. https://doi.org/10.1089/neu.2018.5771.

Gris, Denis, Eilis F. Hamilton, and Lynne C. Weaver. 2008. "The Systemic Inflammatory Response After Spinal Cord Injury Damages Lungs and Kidneys." *Experimental Neurology* 211 (1): 259–70. https://doi.org/10.1016/J.EXPNEUROL.2008.01.033.

Guo, Qiang, Shurong Li, Yajie Liang, Yanling Zhang, Jiqiang Zhang, Can Wen, Sen Lin, Hanzhi Wang, and Bingyin Su. 2010. "Effects of C3 Deficiency on Inflammation and Regeneration Following Spinal Cord Injury in Mice." *Neuroscience Letters* 485 (1): 32–36. https://doi.org/10.1016/j.neulet.2010.08.056.

Hagen, Ellen Merete. 2015. "Acute Complications of Spinal Cord Injuries." *World Journal of Orthopedics* 6 (1): 17–23. https://doi.org/10.5312/wjo.v6.i1.17.

Haskell, Gloria Thompson, Thomas Michael Maynard, Ron Andrew Shatzmiller, and Anthony-Samuel Lamantia. 2002. "Retinoic Acid Signaling at Sites of Plasticity in the Mature Central Nervous System." *Journal of Comparative Neurology* 452 (3): 228–41. https://doi.org/10.1002/cne.10369.

Hayes, K.c., T.c.l. Hull, G.a. Delaney, P.j. Potter, K.a.j. Sequeira, K. Campbell, and P.g. Popovich. 2002. "Elevated Serum Titers of Proinflammatory Cytokines and CNS Autoantibodies in Patients with Chronic Spinal Cord Injury." *Journal of Neurotrauma* 19 (6): 753–61. https://doi.org/10.1089/08977150260139129.

Hulme, C. H., S. J. Brown, H. R. Fuller, J. Riddell, A. Osman, J. Chowdhury, N. Kumar, W. E. Johnson, and K. T. Wright. 2017. "The Developing Landscape of Diagnostic and Prognostic Biomarkers for Spinal Cord Injury in Cerebrospinal Fluid and Blood." *Spinal Cord* 55 (2): 114–25. https://doi.org/10.1038/sc.2016.174.

Hulstaert, Niels, Jim Shofstahl, Timo Sachsenberg, Mathias Walzer, Harald Barsnes, Lennart Martens, and Yasset Perez-Riverol. 2020. "ThermoRawFileParser: Modular, Scalable, and Cross-Platform RAW File Conversion." *Journal of Proteome Research* 19 (1): 537–42. https://doi.org/10.1021/acs.jproteome.9b00328.

Hundt, H., J. C. Fleming, J. T. Phillips, A. Lawendy, K. R. Gurr, S. I. Bailey, D. Sanders, et al. 2011.

"Assessment of Hepatic Inflammation After Spinal Cord Injury Using Intravital Microscopy." *Injury* 42 (7): 691–96. https://doi.org/10.1016/j.injury.2010.12.013.

Hurst, Robert E., Przemyslaw Waliszewski, Miroslawa Waliszewska, Rebecca B. Bonner, Doris M. Benbrook, Arindam Dar, and George P. Hemstreet. 1999. "Complexity, Retinoid-Responsive Gene Networks, and Bladder Carcinogenesis." In *Advances in Bladder Research*, edited by Laurence S. Baskin and Simon W. Hayward, 462:449–67. Advances in Experimental Medicine and Biology. Boston, MA: Springer US. https://doi.org/10.1007/978-1-4615-4737-2_35.

Jassal, Bijay, Lisa Matthews, Guilherme Viteri, Chuqiao Gong, Pascual Lorente, Antonio Fabregat, Konstantinos Sidiropoulos, et al. 2020. "The Reactome Pathway Knowledgebase." *Nucleic Acids Research* 48 (D1): D498–503. https://doi.org/10.1093/nar/gkz1031.

Jogia, Trisha, Marcel A. Kopp, Jan M. Schwab, and Marc J. Ruitenberg. 2021. "Peripheral White Blood Cell Responses as Emerging Biomarkers for Patient Stratification and Prognosis in Acute Spinal Cord Injury." *Current Opinion in Neurology* 34 (6): 796–803. https://doi.org/10.1097/WCO.0000000000000995.

Kim, So Yong, Tae Jin Kim, and Ki-Young Lee. 2008. "A Novel Function of Peroxiredoxin 1 (Prx-1) in Apoptosis Signal-Regulating Kinase 1 (Ask1)-Mediated Signaling Pathway." *FEBS Letters* 582 (13): 1913–18. https://doi.org/10.1016/j.febslet.2008.05.015.

Kwon, Brian K., Ona Bloom, Ina-Beate Wanner, Armin Curt, Jan M. Schwab, James Fawcett, and Kevin K. Wang. 2019. "Neurochemical Biomarkers in Spinal Cord Injury." *Spinal Cord* 57 (10): 819–31. https://doi.org/10.1038/s41393-019-0319-8.

Kwon, Brian K, Anthea M T Stammers, Lise M Belanger, Arlene Bernardo, Donna Chan, Carole M Bishop, Gerard P Slobogean, et al. 2010. "Cerebrospinal Fluid Inflammatory Cytokines and Biomarkers of Injury Severity in Acute Human Spinal Cord Injury." *Journal of Neurotrauma* 27 (4): 669–82. https://doi.org/10.1089/neu.2009.1080.

Lane, Michelle A., and Sarah J. Bailey. 2005. "Role of Retinoid Signalling in the Adult Brain." *Progress in Neurobiology* 75 (4): 275–93. https://doi.org/10.1016/j.pneurobio.2005.03.002.

Low, Felicia M., Mark B. Hampton, and Christine C. Winterbourn. 2008. "Peroxiredoxin 2 and Peroxide Metabolism in the Erythrocyte." *Antioxidants & Redox Signaling* 10 (9): 1621–30. https://doi.org/10.1089/ars.2008.2081.

Lu, Yue, Xiang-Sheng Zhang, Zi-Huan Zhang, Xiao-Ming Zhou, Yong-Yue Gao, Guang-Jie Liu, Han Wang, Ling-Yun Wu, Wei Li, and Chun-Hua Hang. 2018. "Peroxiredoxin 2 Activates Microglia by Interacting with Toll-like Receptor 4 After Subarachnoid Hemorrhage." *Journal of Neuroinflammation* 15 (1): 87. https://doi.org/10.1186/s12974-018-1118-4.

Lu, Yue, Xiang-Sheng Zhang, Xiao-Ming Zhou, Yong-Yue Gao, Chun-Lei Chen, Jing-Peng Liu, Zhen-Nan Ye, et al. 2019. "Peroxiredoxin 1/2 Protects Brain Against H2O2-induced Apoptosis After Subarachnoid Hemorrhage." *The FASEB Journal* 33 (2): 3051–62. https://doi.org/10.1096/fj.201801150R.

Malaspina, Andrea, Narendra Kaushik, and Jackie De Belleroche. 2001. "Differential Expression of 14 Genes in Amyotrophic Lateral Sclerosis Spinal Cord Detected Using Gridded cDNA Arrays." *Journal of Neurochemistry* 77 (1): 132–45. https://doi.org/10.1046/j.1471-4159.2001.00231.x.

Matsuzawa, Atsushi, Kaoru Saegusa, Takuya Noguchi, Chiharu Sadamitsu, Hideki Nishitoh, Shigenori Nagai, Shigeo Koyasu, Kunihiro Matsumoto, Kohsuke Takeda, and Hidenori Ichijo. 2005. "ROS-dependent Activation of the TRAF6-ASK1-p38 Pathway Is Selectively Required for TLR4-mediated Innate Immunity." *Nature Immunology* 6 (6): 587–92. https://doi.org/10.1038/ni1200.

McDaid, David, A.-La Park, Angela Gall, Mariel Purcell, and Mark Bacon. 2019. "Understanding and Modelling the Economic Impact of Spinal Cord Injuries in the United Kingdom." *Spinal Cord* 57 (9): 778–88. https://doi.org/10.1038/s41393-019-0285-1.

Peffers, M. J., B. McDermott, P. D. Clegg, and C. M. Riggs. 2015. "Comprehensive Protein Profiling of Synovial Fluid in Osteoarthritis Following Protein Equalization." *Osteoarthritis and Cartilage* 23 (7): 1204–13. https://doi.org/10.1016/j.joca.2015.03.019.

Perez-Riverol, Yasset, Jingwen Bai, Chakradhar Bandla, David García-Seisdedos, Suresh Hewapathirana, Selvakumar Kamatchinathan, Deepti J Kundu, et al. 2021. "The PRIDE Database Resources in 2022: A Hub for Mass Spectrometry-Based Proteomics Evidences." *Nucleic Acids Research* 50 (D1): D543–52. https://doi.org/10.1093/nar/gkab1038.

Peterson, P. A. 1971. "Studies on the Interaction Between Prealbumin, Retinol-Binding Protein, and Vitamin A." *The Journal of Biological Chemistry* 246 (1): 44–49.

Qiao, Fei, Carl Atkinson, Hongbin Song, Ravinder Pannu, Inderjit Singh, and Stephen Tomlinson. 2006. "Complement Plays an Important Role in Spinal Cord Injury and Represents a Therapeutic Target for Improving Recovery Following Trauma." *The American Journal of Pathology* 169 (3): 1039–47. https://doi.org/10.2353/ajpath.2006.060248.

Rhee, Sue Goo, and Hyun Ae Woo. 2011. "Multiple Functions of Peroxiredoxins: Peroxidases, Sensors and Regulators of the Intracellular Messenger H2o2, and Protein Chaperones." *Antioxidants & Redox Signaling* 15 (3): 781–94. https://doi.org/10.1089/ars.2010.3393.

Röst, Hannes L., Timo Sachsenberg, Stephan Aiche, Chris Bielow, Hendrik Weisser, Fabian Aicheler, Sandro Andreotti, et al. 2016. "OpenMS: A Flexible Open-Source Software Platform for Mass Spectrometry Data Analysis." *Nature Methods* 13 (9): 741–48. https://doi.org/10.1038/nmeth.3959.

Salzano, Sonia, Paola Checconi, Eva-Maria Hanschmann, Christopher Horst Lillig, Lucas D. Bowler, Philippe Chan, David Vaudry, et al. 2014. "Linkage of Inflammation and Oxidative Stress via Release of Glutathionylated Peroxiredoxin-2, Which Acts as a Danger Signal." *Proceedings of the National Academy of Sciences* 111 (33): 12157–62. https://doi.org/10.1073/pnas.1401712111.

Sauerbeck, Andrew D., J. Lukas Laws, Veera V. R. Bandaru, Phillip G. Popovich, Norman J. Haughey, and Dana M. McTigue. 2014. "Spinal Cord Injury Causes Chronic Liver Pathology in Rats." *Journal of Neurotrauma* 32 (3): 159–69. https://doi.org/10.1089/neu.2014.3497.

Segal, J. L., E. Gonzales, S. Yousefi, L. Jamshidipour, and S. R. Brunnemann. 1997. "Circulating Levels of IL-2r, ICAM-1, and IL-6 in Spinal Cord Injuries." *Archives of Physical Medicine and Rehabilitation* 78 (1): 44–47. https://doi.org/10.1016/s0003-9993(97)90008-3.

Shichita, Takashi, Eiichi Hasegawa, Akihiro Kimura, Rimpei Morita, Ryota Sakaguchi, Ichiro Takada, Takashi Sekiya, et al. 2012. "Peroxiredoxin Family Proteins Are Key Initiators of Post-Ischemic Inflammation in the Brain." *Nature Medicine* 18 (6): 911–17. https://doi.org/10.1038/nm.2749.

Sockanathan, Shanthini, and Thomas M Jessell. 1998. "Motor Neuron-Derived Retinoid Signaling Specifies the Subtype Identity of Spinal Motor Neurons." *Cell* 94 (4): 503–14. https://doi.org/10.1016/S0092-8674(00)81591-3.

Song, Guoqing, Cate Cechvala, Daniel K. Resnick, Robert J. Dempsey, and Vemuganti L. Raghavendra Rao. 2001. "GeneChip Analysis After Acute Spinal Cord Injury in Rat." *Journal of Neurochemistry* 79 (4): 804–15. https://doi.org/10.1046/j.1471-4159.2001.00626.x.

Spiess, Martina R., Roland M. Müller, Rüdiger Rupp, Christian Schuld, and Hubertus J. A. van Hedel. 2009. "Conversion in ASIA Impairment Scale During the First Year After Traumatic Spinal Cord Injury." *Journal of Neurotrauma* 26 (11): 2027–36. https://doi.org/10.1089/neu.2008.0760.

Stoscheck, Christa M. 1987. "Protein Assay Sensitive at Nanogram Levels." *Analytical Biochemistry* 160 (2): 301–5. https://doi.org/10.1016/0003-2697(87)90051-0.

Sun, Xin, Zachary B. Jones, Xiao-ming Chen, Libing Zhou, Kwok-Fai So, and Yi Ren. 2016. "Multiple Organ Dysfunction and Systemic Inflammation After Spinal Cord Injury: A Complex Relationship." *Journal of Neuroinflammation* 13 (1): 260. https://doi.org/10.1186/s12974-016-0736-y.

Szalai, Alexander J., Frederik W. van Ginkel, Yue Wang, Jerry R. McGhee, and John E. Volanakis. 2000. "Complement-Dependent Acute-Phase Expression of C-Reactive Protein and Serum Amyloid P-Component." *The Journal of Immunology* 165 (2): 1030–35. https://doi.org/10.4049/jimmunol.165.2.1030.

The UniProt Consortium. 2021. "UniProt: The Universal Protein Knowledgebase in 2021." *Nucleic Acids Research* 49 (D1): D480–89. https://doi.org/10.1093/nar/gkaa1100.

Wang, Kevin K., Zhihui Yang, Tian Zhu, Yuan Shi, Richard Rubenstein, J. Adrian Tyndall, and Geoff T. Manley. 2018. "An Update on Diagnostic and Prognostic Biomarkers for Traumatic Brain Injury." *Expert Review of Molecular Diagnostics* 18 (2): 165–80. https://doi.org/10.1080/14737159.2018.1428089.

Yang, Chih-Ya, Jiun-Bo Chen, Ting-Fen Tsai, Yi-Chen Tsai, Ching-Yen Tsai, Pi-Hui Liang, Tsui-Ling Hsu, et al. 2013. "Clec4f Is an Inducible C-Type Lectin in F4/80-Positive Cells and Is Involved in Alpha-Galactosylceramide Presentation in Liver." *PLOS ONE* 8 (6): e65070. https://doi.org/10.1371/journal.pone.0065070.

Yu, Guangchuang, and Qing-Yu He. 2016. "ReactomePA: An R/Bioconductor Package for Reactome Pathway Analysis and Visualization." *Molecular BioSystems* 12 (2): 477–79. https://doi.org/10.1039/c5mb00663e.