Dauer fate in a *Caenorhabditis elegans* Boolean network model

Alekhya Abhiram Kandoor[1] and Janna L. Fierst[2*]

[1] Department of Biomedical Engineering, University of Virginia, Charlottesville, VA, USA

[2] Biomolecular Sciences Institute and Department of Biological Sciences, Florida International University, Miami, FL, USA

* Author for correspondence: jfierst@fiu.edu

**Abstract**

Cellular fates are determined by genes interacting across large, complex biological networks. A critical question is how to identify causal relationships spanning distinct signaling pathways and underlying organismal phenotypes. Here, we addressed this by constructing a Boolean model of a well-studied developmental network and analyzing information flows through the system. Depending on environmental signals *Caenorhabditis elegans* develop normally to sexual maturity or enter a reproductively delayed, developmentally quiescent 'dauer' state, progressing to maturity when the environment changes. The developmental network that starts with environmental signal and ends in the dauer/no dauer fate involves genes across 4 signaling pathways including cyclic GMP, Insulin/IGF-1, TGF-β and steroid hormone synthesis. We identified three stable motifs leading to normal development, each composed of genes interacting across the Insulin/IGF-1, TGF-Beta and steroid hormone synthesis pathways. Causal logic analysis identified a five gene cyclic subgraph summarizing the information flow from environmental signal to dauer fate. Perturbation analysis showed that a multifactorial insulin profile determined the stable motifs the system entered and interacted with *daf-12* as the switchpoint driving the dauer/no dauer fate. Our results demonstrate how complex organismal systems can be distilled into abstract representations that permit full characterization of the causal relationships driving development.

**Introduction**

Cellular states, developmental pathways and organismal phenotypes are determined by interactions between biomolecules. These biological networks are large and complex, involving genes, proteins and regulatory molecules spanning diverse pathways and levels of biological organization [1]. Data-based network inference often implicates large numbers of biomolecules through correlation-based methods [2] but network modeling and analysis indicate causal relationships are the key to controlling

information flow and determining cellular fates [3]. A fundamental question is how to identify the critical, causal relationships within complex biological systems and between distant nodes in a network [4]. Here, we construct a Boolean model of a well-studied model system and use network analysis techniques to identify the core interactions responsible for the phenotype.

*C. elegans* is a small nematode worm that has been used as a model organism in biological research for over 50 years [5]. *C. elegans* was the first metazoan to have its genome fully sequenced [6, 7] and the long history of *C. elegans* research has provided a wealth of genetic, genomic and developmental understanding of this small worm [8-11].

One of the most studied developmental processes in *C. elegans* is dauer [12, 13]. The small worms are vulnerable to environmental conditions including lack of food or moisture [14] and high temperature [15]. *C. elegans* senses its environment through chemoreceptors that perceive biomolecules including pheromones produced by other worms [16]. In low-stress environments the worms progress through discrete larval stages L1-L4, to adulthood and reproductive maturity [12]. When worms sense pheromones (indicating high population density) or a resource-poor environment a developmental switch is activated at the L1 stage to dauer arrest [17]. Dauer worms can move but are developmentally quiescent and survive without feeding for periods of up to 4 months. Dauer entry and exit occur at variable rates depending on environment [18] and genotype [19] and undergoing dauer has lasting effects on worm reproduction [20], physiology [21] and locomotion [22].

Dauer is a unique, discrete developmental switch and the molecular basis has been studied extensively. Over 100 genes across 4 signaling pathways (cyclic GMP, Insulin/IGF-1, TGF-β and steroid hormone synthesis) have been implicated as influencing dauer [12, 23]. Despite extensive descriptive characterization, we lack a robust understanding of the interplay between these pathways and the causal links that drive the system to one fate or another. Here, we study a Boolean model and identify the critical interactions determining dauer fate.

Simplified representations of complex biological networks can accurately distill systems down to essential interactions [24]. Boolean networks are graphs where nodes represent genes and edges are regulatory interactions defined as Boolean functions or logic gates [25]. We use our Boolean network to emulate cellular behavior observed in experimental settings and systematically perturb the system to

discover causal links within the larger complex network. We identify the critical interactions and combinations of gene states that determine dauer fate.

## Results

### *Constructing a dauer Boolean network*

We performed an exhaustive literature survey to identify essential regulatory interactions among dauer pathway genes and constructed a Boolean network with 26 nodes and 33 interactions (Figure 1a; Supplementary Table 1). The nodes "pheromone" [26] and "*cmk-1*" (a food receptor [27]) were input signals that allowed the model to converge onto the dauer/no dauer output node.

### *Identifying stable motifs*

A network attractor is a set of gene states the system can stabilize in [28]. The dauer Boolean network had 10 different attractor states (Supplementary Figure 1) with 1 resulting in developmental progression to adult, 8 resulting in the dauer fate and 1 resulting in either dauer or no dauer depending on system conditions [29]. Although an attractor represents a potential stable point, not all attractors are accessible from all states. To further analyze system stability, we divided the total network into small subgraphs [3, 30]. We identified three Stable Motifs (SMs) in the developmental progression to adult (Figure 1b-d). Each of these encompassed genes from at least two different pathways. Stable Motif 1 (SM1; Figure 1b) spanned 10 genes across the IGF-1/insulin signaling, TGF-β and Steroid hormone pathways [12]. SM2 and SM3 involved 4 and 8 genes, respectively, across the IGF-1/insulin signaling and TGF-β pathways. *daf-2*, *daf-7* and *hsf-1* (heat shock protein) were common between all 3 stable motifs with *hsf-1* acting as a crucial node where different pathways intersect. This result has been shown by previous experimental work [31]. Each of the SMs involved a different insulin signaling gene, *ins-1*, *ins-7* or *ins-18*. We did not identify any SMs for dauer formation (the A3 attractor; Supplementary Figure 1).

### *Identifying driver nodes in the SMs*

We simulated gene perturbations to identify the driver nodes for each of these SMs [29]. Changing the existing state of the critical nodes shared between the stable motifs (i.e., *daf-2* or *daf-7* downregulation or *hsf-1* upregulation) prevented the system from entering into any of the SMs and pushed it to one of the dauer attractors. Perturbation analysis identified the critical causal interactions in the network as SM2, encompassing *daf-2*, *daf-7*, *ins-7* and *hsf-1*. Perturbation of *daf-2*, *daf-7* or *hsf-1* genes prohibited

the system from stabilizing in the SM and the attractors corresponded to each of these nodes. We concluded that *daf-2*, *daf-7* and *hsf-1* were the driver nodes for the SMs.

***Analyzing causal interactions in the dauer Boolean network***

We identified a reduced network representing causal information flow [32] from environmental input to dauer fate (Figure 2a). The reduced network contained a cyclic subgraph (Figure 2b) similar to SM2, containing *daf-2*, *daf-7*, *ins-7* and *hsf-1*. However, it included a necessary inhibitory regulation of *daf-9* by *daf-2*. The dynamics of the entire system can be summarized as input to this subgraph. The full reduced network (Figure 2c) included 12 nodes and 13 edges.

***Insulin signaling drives the binary dauer/no dauer fate***

Gene perturbations revealed an additional 7 SMs (SM4-10; Supplementary Table 3). For each of the perturbations performed, the system could end up in one of 10 different attractors but few of these could be reached from stable conditions with active stable motifs. Activating 'dauer' conditions including low food and pheromone presence resulted in dauer fate and the A3 attractor (Figure 3a) and available food with pheromone absence resulted in the system reaching the A7 attractor through SMs 1, 2 or 3 (Figure 3b).

We identified insulin-dependent dauer arrest attractors across the perturbations. Activation of *ins-1* and *ins-18* resulted in the dauer fate through SMs 4-10 but inactivation of either pushed the system to normal development (Figure 3c). Together with *ins-7* the activation/inactivation profile of these genes pushed the system to normal development through SMs 1, 2 or 3 (Figure 1b-d). Similarly, *daf-12* activation resulted in dauer arrest with the insulin profile determining the SM the system entered. When the antagonistic insulins (*ins-1* and *ins-18*) were activated the system stabilized into SM 8 and when *ins-1* was turned off the system stabilized in either SM 2 or 3 (Figure 3d). The insulin genes were the decision makers for the convergence of these dauer pathways.

***Identifying binary states across dauer pathways***

For normal development we identified one strongly correlated module, one strongly anticorrelated module and a third set of genes with quantitative relationships across the SMs (Supplementary Figure 2). For dauer arrest we identified two strongly correlated modules and two strongly anticorrelated

modules. These modules span the 4 signaling pathways involved in dauer arrest and indicate relationships between distant genes in the network.

**Discussion**

We have constructed a Boolean model of the dauer arrest network and identified the critical, causal interactions driving the system between dauer fate and normal development. Although the network contains 26 genes and 33 interactions, the system can be driven between the dauer/no dauer fate by controlling a few critical nodes. Importantly, the switchpoints for this system require specific combinations of gene states behaving synergistically or antagonistically.

There are over 100 genes that have been described as influencing the dauer state [12, 23]. However, many of these have been identified through mutant analyses or total loss of function alleles [33]. Genes may be capable of influencing the dauer state through loss-of-function or extreme phenotypes but this may not translate to a gene's involvment in the dauer/no dauer fate in natural populations. Here, we have chosen to focus on the genes and interactions determined essential to the dauer network. Distilling these further into causal interactions revealed a core set of genes and proteins controlling the dauer/no dauer fate.

Many of the results of our study mirror experimental dauer investigations. For example, a systematic analysis of mutants in 35 insulin signaling genes in *C. elegans* identified roles in lifespan, reproduction, pathogen resistance, thermotolerance and dauer entry and exit [34]. Here, by constructing a network that encompassed multiple signaling pathways we were able to analyze the role of insulin signaling genes and robustly identify the interaction between insulin signaling, heat shock response and daf-sensitive genes that determines dauer fate. Our results demonstrate that dauer signaling pathways find different routes to transduce the signals from the environment to developmental decision.

This work has important future applications. The model can used to study how different cellular responses work in cohort with dauer pathways by extending the system to encompass genes and interactions involved in disparate pathways including the cell cycle and immune response. Expanding this framework can provide a tractable system to test experimental hypotheses that are currently challenging, labor-intensive and beyond the scope of traditional laboratory investigations.

**Methods**

We first extracted all dauer-involved genes described in the WormBook 'Dauer' chapter [12]. For each of these genes, we then searched on WormBase [35] for genes known to interact with these dauer genes and genes known to act in the same pathways as these dauer genes. We next surveyed the literature for regulatory interactions within this gene and pathway set and created a filtered set of dauer genes and main-effect regulatory interactions (Supplementary Table 1). These interactions were mainly obtained from the WormBase database [35] and verified with the scientific publications cited on WormBase (a full list of nodes, interactions, citations and PMIDs is given in Supplementary Table 1).

We used this regulatory interaction information for each gene to formulate Boolean functions (Supplementary Table 2). We combined literature-reported regulations into a preliminary model and used results obtained from simulations and perturbations to fine-tune the Boolean functions for each node until we were able to mimic the expected behavior of the system. For example, multiple articles reported that *daf-16* was activated either when *akt* was repressed [36-39] or when *daf-12* was activated [40, 41]. Simulated conditions for normal adult development should therefore result in *daf-16* repression and no dauer activation. To achieve this known output for *daf-16* we assigned an 'OR' operator for these two regulators. In some cases, we were able to extract the relationship between regulator nodes from the literature. This approach has been similarly demonstrated in previous works to gain qualitative insights using discrete networks [42, 43].

The initial conditions used to generate the trajectories of the system's dynamics were based on well-known environmental cues such as food availability (*cmk-1*) and pheromone (pher) detected by *C. elegans* [16, 27]. Favorable conditions allowed the organism to develop into an adult ("no dauer") and unfavorable conditions into "dauer" [26]. We set the initial conditions as *cmk-1* = 1 and pher = 0 for normal development (here, dauer = 0) and *cmk-1* = 0 and pher = 1 for dauer fate (here, dauer = 1). We monitored the dynamics and convergence of the system based on the state of the 'dauer' output node.

Simulations were performed with asynchronous updating using boolean2 software [44]. In this framework a collector class averaged the states of nodes over multiple runs for simulating a system with a non-deterministic updating scheme. We performed 100 simulations for each set of initial conditions and for every iteration, the collector averaged the state of each node generated for 1000 steps. In all

our simulations, the nodes reached equilibrium after approximately 15 iterations. Nodes with states > 0.5 were considered 'ON' (as indicated by [44]) and nodes with states <0.5 were considered 'OFF'.

***Validating the model***

To validate the model, we checked whether the model has the ability to reproduce known experimental outcomes. Mutant phenotypes in *C. elegans* that lead to either adult or dauer formation are well studied [12]. We used published experimental evidence to check whether our model could reproduce similar results. For example, dauer-constitutive (Daf-c) mutants are those for which genes mutated or down-regulated in favorable conditions (presence of food and no pheromone) lead to dauer formation. Dauer-defective (Daf-d) mutants are those for which genes can be down-regulated in unfavorable conditions (no food and pheromone present) and the worms will not develop into dauer larvae [17, 45-47]. In our model we show knocking down Daf-c genes (*daf-2*, *daf-7*, *daf-11*, and *daf-9*) separately under favourable initial conditions (cmk-1 = 1 and pheromone=0) forms dauer and knocking down daf-d mutants (daf-12 and daf-16) under unfavorable conditions does not form dauer. These results (Supplementary Figure 1b) validate our dauer Boolean model captures essential wild type and mutant phenotypes.

Attractors of Boolean networks are known to depict specific biological phenotypes. We explored the set of attractors and stable motifs for our model using pystablemotifs software [28, 29]. A perturbation of a node in our experiments refers to reverse the existing state of a node and specify that along with the initial conditions set. The network diagrams are created using Cytoscape [48]. Code, simulations and scripts are available at https://github.com/alekhyaa2/Dauer-Boolean-Model.

Acknowledgements

JLF and AAK were supported by National Science Foundation grants EF-1921562 and DEB1941854 to JLF.

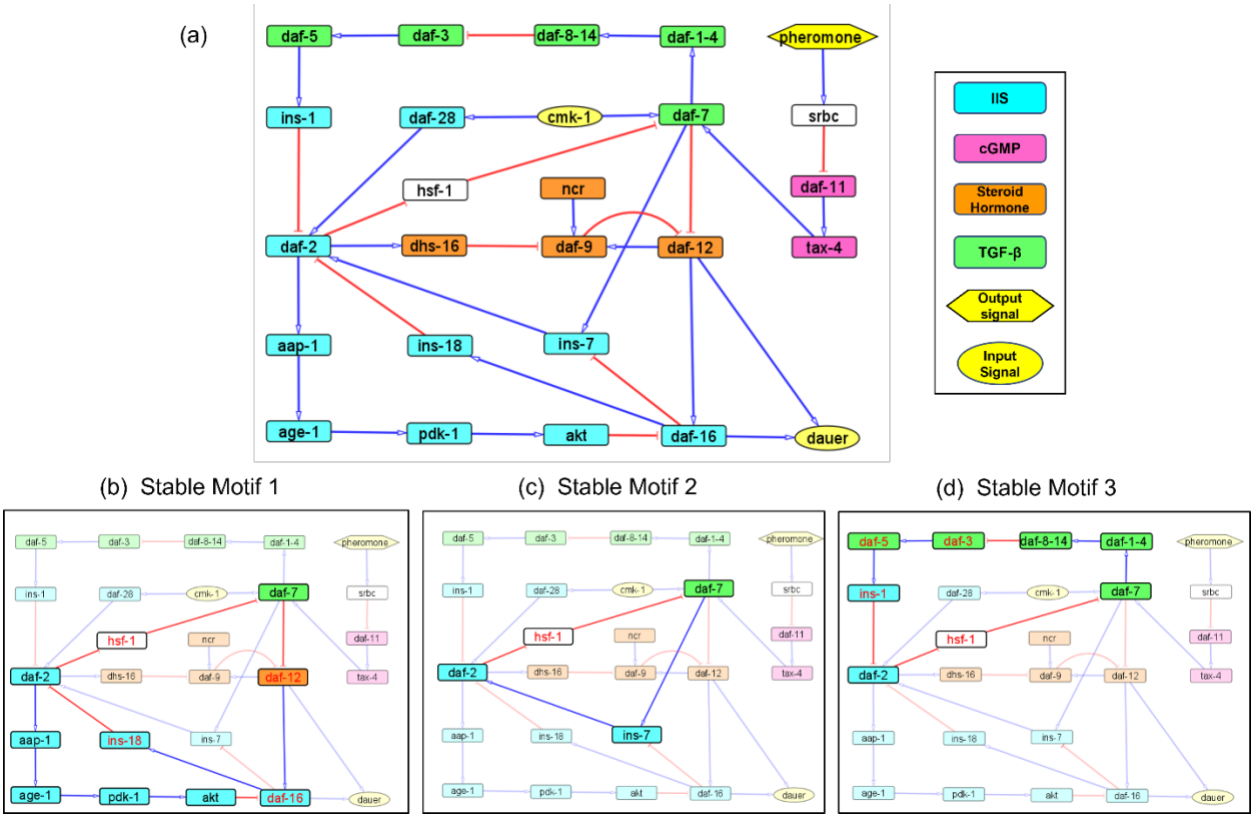


**Figure 1** Models representing the four major dauer inducing pathways and the stable motifs of this network. (a) The dauer Boolean network included 26 nodes and 34 edges. Each node represented a molecular entity (gene, receptor, protein, etc.) involved in signal transduction pathways. Blue and red edges indicated regulatory interactions between the nodes that activated (signified by arrow heads) or inhibited (signified by 'T' edges). The four dauer inducing pathways were represented by four different colors. Here, *cmk-1* and pheromone were input signals which when turned on and off, decided the dauer fate. Nodes *srbc* (pheromone receptor) and *hsf-1* (heat shock protein) did not belong to any of the four dauer pathways. (b), (c) and (d) Subgraphs that were part of the cyclic SMs 1, 2 and 3 respectively, into which the dauer Boolean network stabilizes. The nodes in red text were inhibited and nodes in black text were activated.

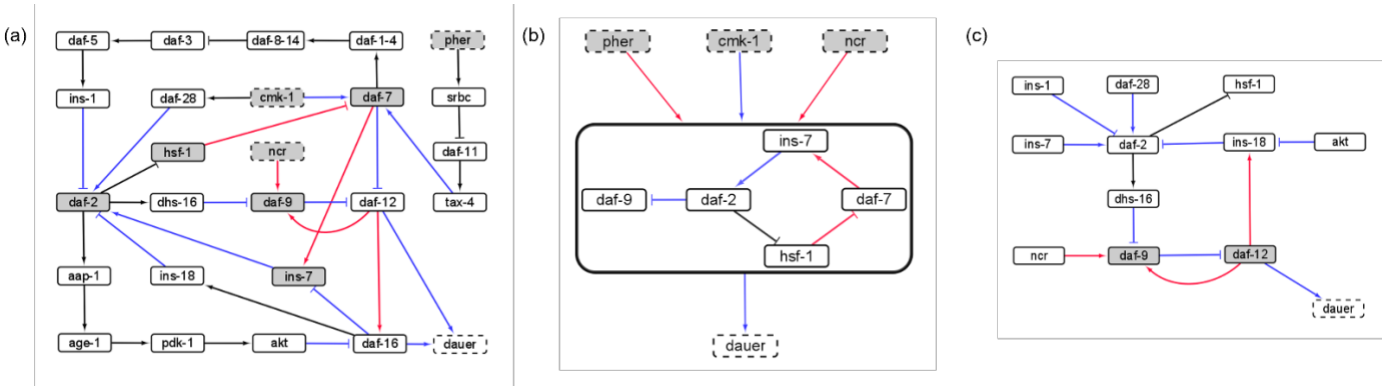


**Figure 2** The causal logic backbone of the dauer Boolean network. (a) The edges were assigned causal logic (blue = necessary, red = sufficient and black = sufficient and necessary). Nodes filled grey with dashed borders were input signals where grey filled nodes were part of cyclic subgraphs (SMs) and solid borders indicated output nodes. (b) The logic backbone derived from identifying subgraphs from input to motif nodes and motif nodes to output signals. Activation of pher and *ncr* was sufficient to reach the motif and *cmk-1* was necessary. The motif stabilization was sufficient to control dauer fate. (c) The reduced dauer logic network consisted of 12 nodes and 13 edges. *Daf-9* and *daf-12* entered a cyclic feedback loop. The insulin factors involved in different endocrine pathways were important points of the network regulating *daf-2* activity and present in the reduced network.

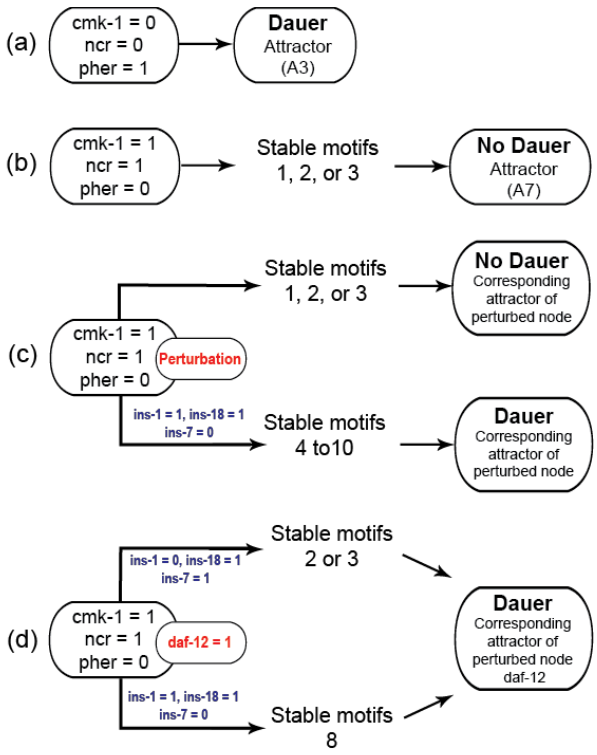


**Figure 3** Model transitions from initial conditions to attractors. (a) Under unfavourable conditions, the system eventually reached the "Dauer" attractor A3 without settling in any of the cyclic motifs. (b) Under favorable conditions (*cmk-1* is on and pheromone is off), the network stabilized in either of the three cyclic SMs which led to the attractor A7 and the "No dauer" phenotype. (c) When a node of SM 1, 2 or 3 was perturbed the system stabilized in different SMs and converged on either dauer arrest or normal development. (d) *daf-12* perturbation resulted in dauer arrest through SMs 2, 3 or 8. *daf-12* presence, irrespective of initial conditions, was sufficient for dauer formation. SMs 4-10 and the attractors of the perturbed node simulations are given in the Supplementary Materials.

References


1. Weng, G., U.S. Bhalla, and R. Iyengar, *Complexity in biological signaling systems.* Science, 1999. **284**(5411): p. 92-6.
2. Stolovitzky, G., D. Monroe, and A. Califano, *Dialogue on reverse-engineering assessment and methods: the DREAM of high-throughput pathway inference.* Ann N Y Acad Sci, 2007. **1115**: p. 1-22.
3. Zanudo, J.G. and R. Albert, *Cell fate reprogramming by control of intracellular network dynamics.* PLoS Comput Biol, 2015. **11**(4): p. e1004193.
4. Lawyer, G., *Understanding the influence of all nodes in a network.* Sci Rep, 2015. **5**: p. 8665.
5. Girard, L.R., et al., *WormBook: the online review of Caenorhabditis elegans biology.* Nucleic Acids Research, 2007. **35**: p. D472-D475.
6. Consortium, C.e.S., *Genome sequence of the nematode C. elegans.* Science, 1998. **282**(5396): p. 2012-8.
7. Waterston, R.H., J.E. Sulston, and A.R. Coulson, *The Genome*, in *C. elegans II*, nd, et al., Editors. 1997: Cold Spring Harbor (NY).
8. Riddle, D.L., et al., *Introduction to C. elegans*, in *C. elegans II*, nd, et al., Editors. 1997: Cold Spring Harbor (NY).
9. Kemphues, K.J. and S. Strome, *Fertilization and Establishment of Polarity in the Embryo*, in *C. elegans II*, nd, et al., Editors. 1997: Cold Spring Harbor (NY).
10. Schedl, T., *Developmental Genetics of the Germ Line*, in *C. elegans II*, nd, et al., Editors. 1997: Cold Spring Harbor (NY).
11. Schnabel, R. and J.R. Priess, *Specification of Cell Fates in the Early Embryo*, in *C. elegans II*, nd, et al., Editors. 1997: Cold Spring Harbor (NY).
12. Hu, P.J., *Dauer.* WormBook.
13. Cassada, R.C. and R.L. Russell, *Dauerlarva, a Post-Embryonic Developmental Variant of Nematode Caenorhabditis-Elegans.* Developmental Biology, 1975. **46**(2): p. 326-342.
14. Golden, J.W. and D.L. Riddle, *The Caenorhabditis-Elegans Dauer Larva - Developmental Effects of Pheromone, Food, and Temperature.* Developmental Biology, 1984. **102**(2): p. 368-378.
15. Ailion, M. and J.H. Thomas, *Dauer formation induced by high temperatures in Caenorhabditis elegans.* Genetics, 2000. **156**(3): p. 1047-1067.
16. Jeong, P.Y., et al., *Chemical structure and biological activity of the Caenorhabditis elegans dauer-inducing pheromone.* Nature, 2005. **433**(7025): p. 541-5.
17. Vowels, J.J. and J.H. Thomas, *Genetic analysis of chemosensory control of dauer formation in Caenorhabditis elegans.* Genetics, 1992. **130**(1): p. 105-23.
18. Bubrig, L.T., J.M. Sutton, and J.L. Fierst, *Caenorhabditis elegans dauers vary recovery in response to bacteria from natural habitat.* Ecology and Evolution, 2020. **10**(18): p. 9886-9895.
19. Lee, D., et al., *Selection and gene flow shape niche-associated variation in pheromone response.* Nat Ecol Evol, 2019. **3**(10): p. 1455-1463.
20. Ow, M.C. and S.E. Hall, *Starvation memory resulting in reproductive plasticity is conserved in some Caenorhabditis elegans wild isolates.* MicroPubl Biol, 2020. **2020**.
21. Ow, M.C., A.M. Nichitean, and S.E. Hall, *Somatic aging pathways regulate reproductive plasticity in Caenorhabditis elegans.* Elife, 2021. **10**.

22. Pradhan, S., et al., *Environmental Programming of Adult Foraging Behavior in C. elegans.* Curr Biol, 2019. **29**(17): p. 2867-2879 e4.
23. Gilabert, A., et al., *Expanding the view on the evolution of the nematode dauer signalling pathways: refinement through gene gain and pathway co-option.* BMC Genomics, 2016. **17**: p. 476.
24. Bornholdt, S., *Less is more in modeling large genetic networks.* Science, 2005. **310**(5747): p. 449-+.
25. Bornholdt, S., *Boolean network models of cellular regulation: prospects and limitations.* Journal of The Royal Society Interface, 2008. **5**(Suppl 1): p. S85.
26. Golden, J.W. and D.L. Riddle, *The Caenorhabditis elegans dauer larva: developmental effects of pheromone, food, and temperature.* Dev Biol, 1984. **102**(2): p. 368-78.
27. Neal, S.J., et al., *Feeding state-dependent regulation of developmental plasticity via CaMKI and neuroendocrine signaling.* Elife, 2015. **4**.
28. Rozum, J.C., et al., *Parity and time reversal elucidate both decision-making in empirical models and attractor scaling in critical Boolean networks.* Sci Adv, 2021. **7**(29).
29. Rozum, J.C., et al., *pystablemotifs: Python library for attractor identification and control in Boolean networks.* Bioinformatics, 2021.
30. Zanudo, J.G. and R. Albert, *An effective network reduction approach to find the dynamical repertoire of discrete dynamic networks.* Chaos, 2013. **23**(2): p. 025111.
31. Barna, J., et al., *Heat shock factor-1 intertwines insulin/IGF-1, TGF-beta and cGMP signaling to control development and aging.* BMC Dev Biol, 2012. **12**: p. 32.
32. Maheshwari, P. and R. Albert, *A framework to find the logic backbone of a biological network.* BMC Syst Biol, 2017. **11**(1): p. 122.
33. Fay, D., *Genetic mapping and manipulation: chapter 1--Introduction and basics.* WormBook, 2006: p. 1-12.
34. Fernandes de Abreu, D.A., et al., *An insulin-to-insulin regulatory network orchestrates phenotypic specificity in development and physiology.* PLoS Genet, 2014. **10**(3): p. e1004225.
35. Harris, T.W., et al., *WormBase: a modern Model Organism Information Resource.* Nucleic Acids Research, 2019. **48**(D1): p. D762-D767.
36. Henderson, S.T. and T.E. Johnson, *daf-16 integrates developmental and environmental inputs to mediate aging in the nematode Caenorhabditis elegans.* Curr Biol, 2001. **11**(24): p. 1975-80.
37. Lin, K., et al., *Regulation of the Caenorhabditis elegans longevity protein DAF-16 by insulin/IGF-1 and germline signaling.* Nat Genet, 2001. **28**(2): p. 139-45.
38. Lee, R.Y., J. Hench, and G. Ruvkun, *Regulation of C. elegans DAF-16 and its human ortholog FKHRL1 by the daf-2 insulin-like signaling pathway.* Curr Biol, 2001. **11**(24): p. 1950-7.
39. Paradis, S. and G. Ruvkun, *Caenorhabditis elegans Akt/PKB transduces insulin receptor-like signals from AGE-1 PI3 kinase to the DAF-16 transcription factor.* Genes Dev, 1998. **12**(16): p. 2488-98.
40. Matyash, V., et al., *Sterol-derived hormone(s) controls entry into diapause in Caenorhabditis elegans by consecutive activation of DAF-12 and DAF-16.* PLoS Biol, 2004. **2**(10): p. e280.
41. Dowell, P., et al., *Convergence of peroxisome proliferator-activated receptor gamma and Foxo1 signaling pathways.* J Biol Chem, 2003. **278**(46): p. 45485-91.

42. Hopfensitz, M., et al., *Attractors in Boolean networks: a tutorial.* Computational Statistics, 2013. **28**(1): p. 19-36.
43. Bornholdt, S., *Boolean network models of cellular regulation: prospects and limitations.* J R Soc Interface, 2008. **5 Suppl 1**: p. S85-94.
44. Albert, I., et al., *Boolean network simulations for life scientists.* Source Code Biol Med, 2008. **3**: p. 16.
45. Vowels, J.J. and J.H. Thomas, *Multiple chemosensory defects in daf-11 and daf-21 mutants of Caenorhabditis elegans.* Genetics, 1994. **138**(2): p. 303-16.
46. Gottlieb, S. and G. Ruvkun, *daf-2, daf-16 and daf-23: genetically interacting genes controlling Dauer formation in Caenorhabditis elegans.* Genetics, 1994. **137**(1): p. 107-20.
47. Albert, P.S. and D.L. Riddle, *Mutants of Caenorhabditis elegans that form dauer-like larvae.* Dev Biol, 1988. **126**(2): p. 270-93.
48. Shannon, P., et al., *Cytoscape: a software environment for integrated models of biomolecular interaction networks.* Genome Res, 2003. **13**(11): p. 2498-504.

**Supplementary Materials**

**Supplementary Table 1** Regulatory interactions of the dauer Boolean network.

| Upstream node | Downstream node | Interaction | PubMed ID |
|---|---|---|---|
| *aap-1* | *age-1* | Activating | 12393910 |
| *age-1* | *pdk-1* | Activating | 10364160 |
| *akt** | *daf-16* | Inhibitory | 11747825, 11381260, 11747821, 9716402 |
| *cmk-1* | *daf-28* | Activating | 26335407 |
| *cmk-1* | *daf-7* | Activating | 26335407 |
| *daf-1* | *daf-8-14** | Activating | 10887089 |
| *daf-11** | *tax-4* | Activating | 8893027 |
| *daf-12* | *daf-16* | Activating | 15383841, 12966085 |
| *daf-12* | *daf-16* | Activating | 15383841 |
| *daf-12* | *daf-9* | Activating | 15084461 |
| *daf-12* | dauer | Activating | 15383841 |
| *daf-16* | *ins-18* | Activating | 22683638 |
| *daf-16* | *ins-7* | Inhibitory | 12845331 |
| *daf-16* | *ins-7* | Inhibitory | 19489741 |
| *daf-16* | dauer | Activating | 15383841 |
| *daf-2* | *aap-1* | Activating | 12393910 |
| *daf-2* | *dhs-16* | Activating | 22505847 |
| *daf-2* | *hsf-1* | Inhibitory | 23116063 |
| *daf-28* | *daf-2* | Activating | 12654727, 27125673 |
| *daf-3* | *daf-5* | Activating | 14681186 |
| *daf-5* | *ins-1* | Activating | 21533078 |
| *daf-7* | *daf-1-4* | Activating | 10887089, 8413626, 8570636 |
| *daf-7* | *ins-7* | Activating | 19489741 |
| *daf-8-14** | *daf-3* | Inhibitory | 20081192, 14992718 |
| *dhs-16* | *daf-9* | Inhibitory | 22505847 |
| *hsf-1* | *daf-7* | Inhibitory | 23116063 |
| *ins-1* | *daf-2* | Inhibitory | 21343369, 11274053 |

| | | | |
|---|---|---|---|
| *ins-18* | *daf-2* | Inhibitory | 22683638 |
| *ins-7* | *daf-2* | Activating | 12845331 |
| *ncr** | *daf-9* | Activating | 15509773 |
| *pdk-1* | *akt** | Activating | 10364160 |
| *pher** | *srbc** | Activating | 19797623 |
| *srbc** | *daf-11** | Inhibitory | 19797623 |
| *tax-4* | *daf-7* | Activating | 16903785 |

*****The nodes names used in literature have been modified for convenience. Here, *daf-11* = cGMP, pher = Pheromone, *ncr* = *ncr-1/2, daf-8-14* = *daf-8* and *daf-14*, *akt* = *akt-1/2*, *srbc* = *srbc-64* and *srbc-66*. PMID Supplementary References [1-27].

**Supplementary Table 2** The Boolean rules of the dauer network. Initial conditions for dauer were *cmk-1* = 0, *ncr* = 0 and pher = 1. Initial conditions for normal development were *cmk-1* = 1, *ncr* = 1 and pher = 0. The state of each node at time 't+1' was calculated according to the states of upstream regulator nodes at time 't'.

| **Downstream node *= Upstream regulators** |
|---|
| *aap-1 *= daf-2* |
| *age-1 *= aap-1* |
| *akt *= pdk-1* |
| *daf-11 *=* not *srbc* |
| *daf-12 *=* not *daf-9* or not *daf-7* |
| *daf-1-4 *= daf-7* |
| *daf-16 *=* not *akt* or *daf-12* |
| *daf-2 *= (ins-7* and *daf-28)* or *(*not *ins-1* or not *ins-18)* |
| *daf-28 *= cmk-1* |
| *daf-3 *=* not *daf-8-14* |
| *daf-5 *= daf-3* |
| *daf-7 *= (tax-4* and *cmk-1)* and not *hsf-1* |
| *daf-8-14 *= daf-1-4* |
| *daf-9 *=* not *dhs-16* or *ncr* or *daf-12* |
| *dauer *= daf-16* and *daf-12* |
| *dhs-16 *= daf-2* |
| *hsf-1 *=* not *daf-2* |
| *ins-1 *= daf-5* |
| *ins-18 *= daf-16* |
| *ins-7 *= daf-7* or not *daf-16* |
| *pdk-1 *= age-1* |
| *srbc *= pher* |
| *tax-4 *= daf-11* |

**Supplementary Table 3** Stable motifs in the dauer Boolean network.

| Name | Stable motif | Perturbation |
|---|---|---|
| SM 4 | *{'ins-18': 1, 'pdk-1': 0, 'daf-5': 1, 'akt': 0, 'age-1': 0, 'daf-16': 1, 'aap-1': 0, 'hsf-1': 1, 'daf-3': 1, 'daf-8-14': 0, 'daf-2': 0, 'ins-1': 1, 'daf-7': 0, 'daf-1-4': 0}* | *ins-7*=0 |
| SM 5 | *{'ins-18': 1, 'daf-5': 1, 'daf-12': 1, 'daf-16': 1, 'hsf-1': 1, 'daf-3': 1, 'daf-8-14': 0, 'daf-2': 0, 'ins-1': 1, 'daf-7': 0, 'daf-1-4': 0}* | *ins-7*=0 |
| SM 6 | *{'pdk-1': 0, 'daf-5': 1, 'akt': 0, 'age-1': 0, 'daf-16': 1, 'aap-1': 0, 'hsf-1': 1, 'daf-3': 1, 'daf-8-14': 0, 'daf-2': 0, 'ins-1': 1, 'daf-7': 0, 'ins-7': 0, 'daf-1-4': 0}* | *ins-18*=1 |
| SM 7 | *{'daf-5': 1, 'daf-12': 1, 'daf-16': 1, 'hsf-1': 1, 'daf-3': 1, 'daf-8-14': 0, 'daf-2': 0, 'ins-1': 1, 'daf-7': 0, 'ins-7': 0, 'daf-1-4': 0}* | *ins-18*=1 |
| SM 8 | *{'daf-5': 1, 'daf-12': 1, 'daf-16': 1, 'hsf-1': 1, 'daf-3': 1, 'daf-8-14': 0, 'daf-2': 0, 'ins-1': 1, 'daf-7': 0, 'ins-7': 0, 'daf-1-4': 0}* | *daf-12*=1, *daf-16*=1, *akt*=0, *pdk-1*=0, *age-1*=0, *aap-1*=0 |
| SM 9 | *{'ins-18': 1, 'daf-12': 1, 'daf-16': 1, 'daf-2': 0, 'daf-7': 0, 'ins-7': 0, 'hsf-1': 1}* | *ins-1*=1, *daf-5*=1, *daf-3*=1, *daf-8-14*=0, *daf-1-4*=0 |
| SM 10 | *{'ins-18': 1, 'pdk-1': 0, 'akt': 0, 'age-1': 0, 'daf-16': 1, 'hsf-1': 1, 'daf-2': 0, 'daf-7': 0, 'ins-7': 0, 'aap-1': 0}* | *ins-1*=1, *daf-5*=1, *daf-3*=1, *daf-8-14*=0, *daf-1-4*=0 |

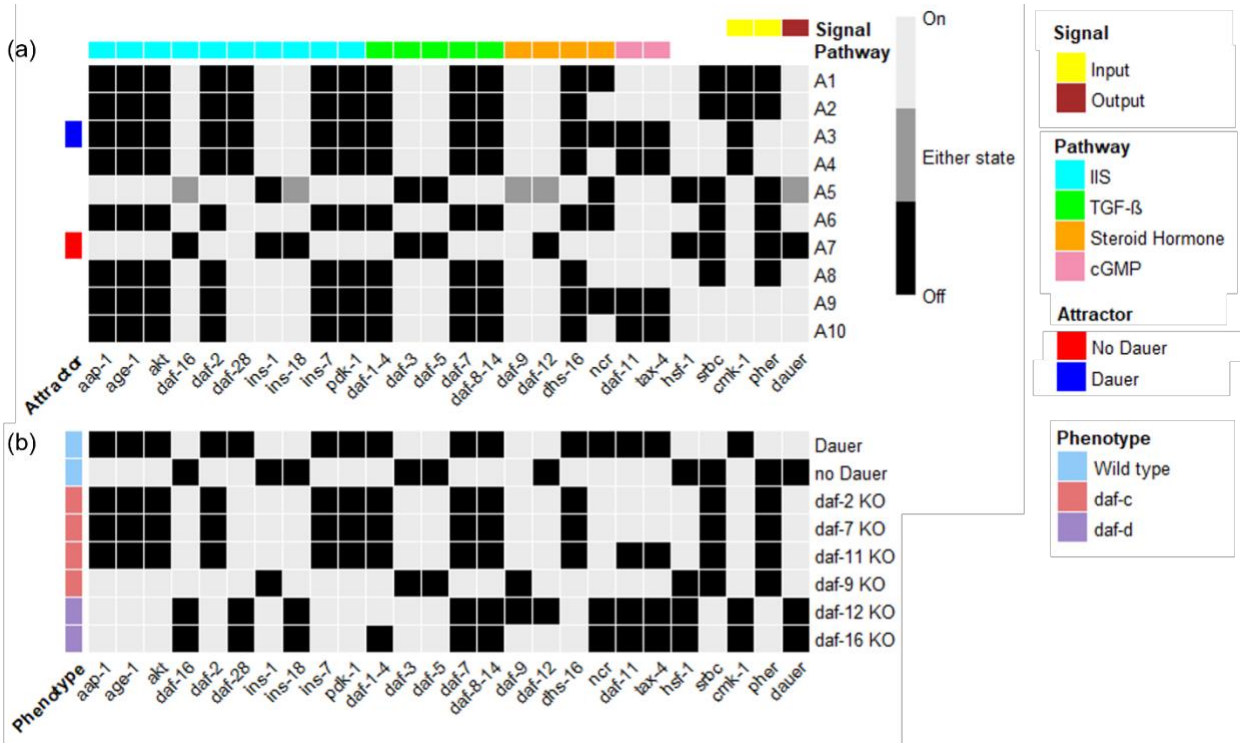


**Supplementary Figure 1** Trajectories of attractors and phenotypes. (a) A heatmap that shows the states of every node of the system in its steady state for 10 different attractors (A1 – A10) identified for this dauer network. Attractors A3 and A7 represent the two wild type phenotypes of this system i.e. “dauer” and “no dauer”. The nodes part of the four different pathways and those that are output/input signals are annotated. (b) A similar heatmap for different phenotypes exhibited by the system.

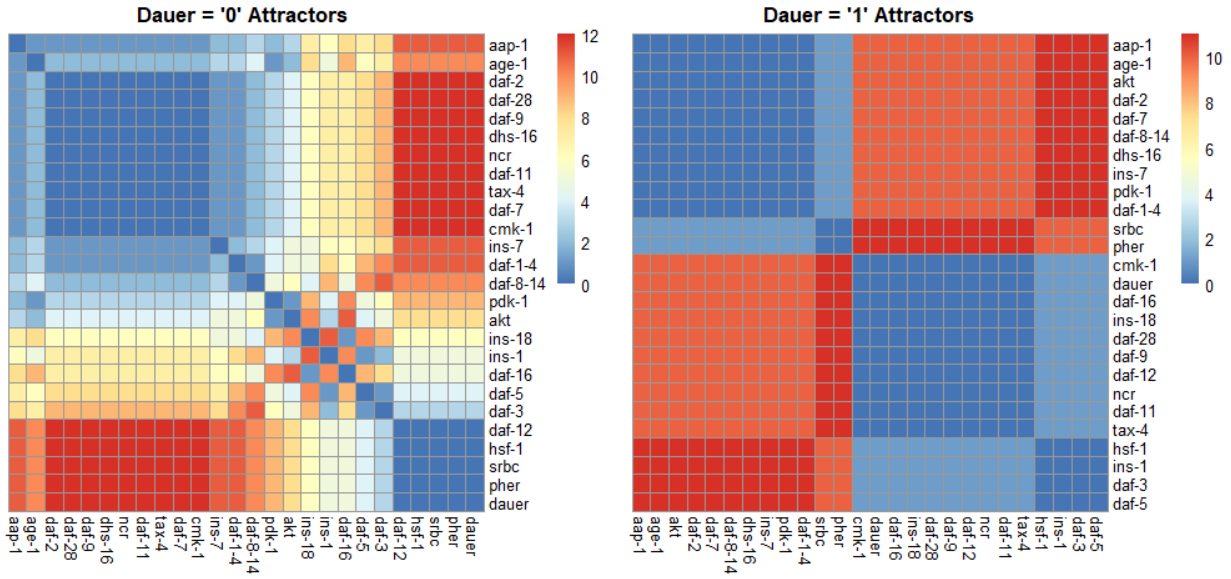


**Supplementary Figure 2** Correlation plots as a function of hamming distance for every node of the attractors converging to either “dauer” or “no dauer” when the nodes of the SMs were perturbed. Hamming distance = 0 implied that the two nodes were in the same state and as the distance value increased the states in which these two nodes exist in the attractors varied. From the dauer=1 correlation plot we observed clusters of nodes that existed in same state across the four dauer inducing pathways. *Ins-1* and *ins-18* were positively and negatively correlated when attractors converged on dauer and no dauer phenotypes, respectively.

**Supplementary References**


1. Lin, K., et al., *Regulation of the Caenorhabditis elegans longevity protein DAF-16 by insulin/IGF-1 and germline signaling.* Nat Genet, 2001. **28**(2): p. 139-45.
2. Artan, M., et al., *Food-derived sensory cues modulate longevity via distinct neuroendocrine insulin-like peptides.* Genes Dev, 2016. **30**(9): p. 1047-57.
3. Neal, S.J., et al., *Feeding state-dependent regulation of developmental plasticity via CaMKI and neuroendocrine signaling.* Elife, 2015. **4**.
4. Wollam, J., et al., *A novel 3-hydroxysteroid dehydrogenase that regulates reproductive development and longevity.* PLoS Biol, 2012. **10**(4): p. e1001305.
5. Matsunaga, Y., et al., *Physiological function, expression pattern, and transcriptional regulation of a Caenorhabditis elegans insulin-like peptide, INS-18.* Biochem Biophys Res Commun, 2012. **423**(3): p. 478-83.
6. Barna, J., et al., *Heat shock factor-1 intertwines insulin/IGF-1, TGF-beta and cGMP signaling to control development and aging.* BMC Dev Biol, 2012. **12**: p. 32.
7. Narasimhan, S.D., et al., *PDP-1 links the TGF-beta and IIS pathways to regulate longevity, development, and metabolism.* PLoS Genet, 2011. **7**(4): p. e1001377.
8. Cornils, A., et al., *Specific insulin-like peptides encode sensory information to regulate distinct developmental processes.* Development, 2011. **138**(6): p. 1183-93.
9. Park, D., A. Estevez, and D.L. Riddle, *Antagonistic Smad transcription factors control the dauer/non-dauer switch in C. elegans.* Development, 2010. **137**(3): p. 477-85.
10. Choi, J.K. and Y.J. Kim, *Implications of the nucleosome code in regulatory variation, adaptation and evolution.* Epigenetics: official journal of the DNA Methylation Society, 2009. **4**(5): p. 291.
11. Hahm, J.H., S. Kim, and Y.K. Paik, *Endogenous cGMP regulates adult longevity via the insulin signaling pathway in Caenorhabditis elegans.* Aging Cell, 2009. **8**(4): p. 473-83.
12. Chang, A.J., et al., *A distributed chemosensory circuit for oxygen preference in C. elegans.* PLoS Biol, 2006. **4**(9): p. e274.
13. Tewari, M., et al., *Systematic interactome mapping and genetic perturbation analysis of a C. elegans TGF-beta signaling network.* Mol Cell, 2004. **13**(4): p. 469-82.
14. Matyash, V., et al., *Sterol-derived hormone(s) controls entry into diapause in Caenorhabditis elegans by consecutive activation of DAF-12 and DAF-16.* PLoS Biol, 2004. **2**(10): p. e280.
15. da Graca, L.S., et al., *DAF-5 is a Ski oncoprotein homolog that functions in a neuronal TGF beta pathway to regulate C. elegans dauer development.* Development, 2004. **131**(2): p. 435-46.
16. Gerisch, B. and A. Antebi, *Hormonal signals produced by DAF-9/cytochrome P450 regulate C. elegans dauer diapause in response to environmental cues.* Development, 2004. **131**(8): p. 1765-76.
17. Murphy, D.L., et al., *Experimental gene interaction studies with SERT mutant mice as models for human polygenic and epistatic traits and disorders.* Genes, Brain and Behavior, 2003. **2**(6): p. 350-364.
18. Li, W., S.G. Kennedy, and G. Ruvkun, *daf-28 encodes a C. elegans insulin superfamily member that is regulated by environmental cues and acts in the DAF-2 signaling pathway.* Genes Dev, 2003. **17**(7): p. 844-58.

19. Dowell, P., et al., *Convergence of peroxisome proliferator-activated receptor gamma and Foxo1 signaling pathways.* J Biol Chem, 2003. **278**(46): p. 45485-91.
20. Wolkow, C.A., et al., *Insulin receptor substrate and p55 orthologous adaptor proteins function in the Caenorhabditis elegans daf-2/insulin-like signaling pathway.* J Biol Chem, 2002. **277**(51): p. 49591-7.
21. Pierce, S.B., et al., *Regulation of DAF-2 receptor signaling by human insulin and ins-1, a member of the unusually large and diverse C. elegans insulin gene family.* Genes Dev, 2001. **15**(6): p. 672-86.
22. Lee, R.Y., J. Hench, and G. Ruvkun, *Regulation of C. elegans DAF-16 and its human ortholog FKHRL1 by the daf-2 insulin-like signaling pathway.* Curr Biol, 2001. **11**(24): p. 1950-7.
23. Gunther, C.V., L.L. Georgi, and D.L. Riddle, *A Caenorhabditis elegans type I TGF beta receptor can function in the absence of type II kinase to promote larval development.* Development, 2000. **127**(15): p. 3337-47.
24. Paradis, S., et al., *A PDK1 homolog is necessary and sufficient to transduce AGE-1 PI3 kinase signals that regulate diapause in Caenorhabditis elegans.* Genes Dev, 1999. **13**(11): p. 1438-52.
25. Paradis, S. and G. Ruvkun, *Caenorhabditis elegans Akt/PKB transduces insulin receptor-like signals from AGE-1 PI3 kinase to the DAF-16 transcription factor.* Genes Dev, 1998. **12**(16): p. 2488-98.
26. Savage, C., et al., *Caenorhabditis elegans genes sma-2, sma-3, and sma-4 define a conserved family of transforming growth factor beta pathway components.* Proc Natl Acad Sci U S A, 1996. **93**(2): p. 790-4.
27. Komatsu, H., et al., *Mutations in a cyclic nucleotide-gated channel lead to abnormal thermosensation and chemosensation in C. elegans.* Neuron, 1996. **17**(4): p. 707-18.