Customized genomes for human and mouse ribosomal DNA mapping

Subin S. George[1], Maxim Pimkin[2], Vikram R. Paralkar[3,4,5]

1. Institute for Biomedical Informatics, University of Pennsylvania Perelman School of Medicine, Philadelphia, PA 19104, USA
2. Cancer and Blood Disorders Center, Dana-Farber Cancer Institute and Boston Children's Hospital, Harvard Medical School, Boston, MA 02215, USA
3. Division of Hematology and Oncology, Department of Medicine, University of Pennsylvania Perelman School of Medicine, Philadelphia, PA 19104, USA
4. Department of Cell and Developmental Biology, University of Pennsylvania Perelman School of Medicine, Philadelphia, PA 19104, USA
5. Abramson Family Cancer Research Institute, University of Pennsylvania Perelman School of Medicine, Philadelphia, PA 19104, USA

Correspondence: vikram.paralkar@pennmedicine.upenn.edu

ABSTRACT

Motivation

Ribosomal RNAs (rRNAs) form a majority of cellular RNA, and the loci from which they are transcribed (rDNA gene repeats) are among the most intensively transcribed regions of the genome. Due to the repetitive nature of rDNA, there has been a historical lack of genome assemblies and bioinformatic pipelines capable of yielding rDNA signal from high-throughput sequencing datasets. The study of rDNA regulation has been stunted by the lack of such tools, leading most investigators to ignore rDNA in genome wide studies, creating a significant knowledge gap in our understanding of how the most abundant RNA in the cell is regulated. Our recent work[1] revealed previously-unnoticed binding of numerous mammalian transcription factors and chromatin proteins to rDNA. Several of these factors were known to play critical roles in development, tissue function, immunity, and malignancy, and had been dissected in detail for decades, but their potential rDNA roles had remained unexplored. Our work demonstrates the extent of the blind spot into which rDNA has fallen in modern genetic and epigenetic studies, and highlights an unfulfilled need for rDNA-optimized public genome assemblies and accessible mapping workflows.

Results

We customized the human hg38 and mouse mm39 genomes to render them suitable for rDNA mapping. The standard builds for these genomes contain numerous partial or fragmented rDNA loci. We identified and masked all rDNA-like regions in the hg38 and mm39 assemblies, added a single rDNA reference sequence of the appropriate species as a ~45kb chromosome R. We also created annotation files to aid visualization of rDNA features in genome browser tracks. We validated the utility of these customized genomes for mapping of known rDNA binding proteins, and we present in this paper a simple workflow for mapping ChIP-seq datasets to rDNA and generating browser tracks. These resources make rDNA mapping and visualization readily accessible to a broad audience.

Availability and Implementation

Customized genome assemblies (*hg38-rDNA v1.0* and *mm39-rDNA v1.0*), annotation files, and positive and negative control mapping tracks are freely available through GitHub at:
https://github.com/vikramparalkar/rDNA-Mapping-Genomes

1 INTRODUCTION

Ribosomes are essential ribonucleoproteins composed in eukaryotes of large 60S and small 40S subunits[2]. RNA components of the ribosome, comprising a majority of its mass, are termed rRNAs (28S, 5.8S, 5S rRNAs in the 60S subunit, and 18S rRNA in the 40S subunit), and collectively form >80% of total cellular RNA. Of these, 18S, 5.8S and 28S rRNAs are produced in mammals through stepwise cleavage of a 13.4 kb 47S pre-rRNA, the transcription of which from rDNA genes by RNA Polymerase I (RNA Pol I) is the rate-limiting step of ribosome biogenesis. rDNA genes, each containing a transcribed region (producing 47S pre-rRNA) followed by a ~30 kb intergenic spacer, are present in hundreds of near-identical copies (typically 200-600 per cell) in repetitive tandem arrays called Nucleolar Organizing Regions (NORs)[3] distributed across 5 chromosomes in humans and mice[4,5]. rDNA genes are the most intensively transcribed loci in dividing cells, and account for the bulk of all transcription[6,7].

The repetitive nature of rDNA has placed substantial bioinformatic barriers in its study. Most standard genome assemblies do not contain intact rDNA sequences, and instead contain a scattering of rDNA fragments, inhibiting the ability of investigators to effectively map high-throughput datasets to them[1]. The new telomere-to-telomere (T2T-CHM13) human genome assembly contains multiple full NOR arrays[8], however the presence in this assembly of 219 rDNA repeats creates non-trivial mapping and interpretive complexities. A handful of groups with ribosome biogenesis expertise have mapped datasets to rDNA using privately-generated rDNA-containing assemblies[9–12], but, to our knowledge, these genomes are not publicly deposited. The historical lack of suitable public assemblies has led investigators at large to simply ignore rDNA when profiling the binding sites of their transcriptional regulators of interest, creating a significant vacuum in the understanding of how the most abundant RNA in the cell is regulated. Recently published work by our group illustrated the extent of this vacuum, when, through unbiased mapping of ~2200 ChIP-seq datasets for ~250 target proteins to rDNA, we identified conserved patterns of rDNA binding for numerous hematopoietic transcription factors and chromatin regulators[1]. Several of the transcription factors, including the CEBP family, IRF family, and SPI1, all of which have critical roles in hematopoiesis, immune cell development and function, and leukemogenesis, showed consistent, robust peaks at canonical motif sequences. Several of these motifs were conserved between human and mouse. Most of these factors had been extensively studied for decades, and had been subjected to ChIP-seq by dozens of investigators, but their striking rDNA occupancy had passed unnoticed due to a lack of appropriate bioinformatic tools. We further demonstrated that the myeloid factor CEBPA promotes RNA Pol I occupancy on rDNA in myeloid progenitors[1]. Our work used mammalian hematopoiesis as a model system, but there is no reason to believe that the binding of cell-type-specific transcriptional regulators to rDNA is restricted to just one tissue; this is likely a universal mechanism that is repurposed across all tissues to modulate rRNA transcription rates to meet tissue-specific needs, but whose prevalence is unknown due to a dearth of suitable mapping tools. Collectively, our work highlighted an unmet need for public assemblies that can be easily used for rDNA mapping.

In this paper, we present human and mouse genome assemblies customized for rDNA mapping (*hg38-rDNA*

v1.0 and *mm39-rDNA v1.0*). We generated these assemblies by masking degenerate rDNA-matching loci in the standard hg38 and mm39 genomes, and inserting a new Chromosome R composed of a single rDNA reference sequence of the appropriate species. We have made these genomes accessible by depositing them to GitHub, along with annotation files and control mapping tracks. Here, we present validation for the use of these genomes for rDNA ChIP-seq, along with a simple workflow to produce rDNA mapping tracks.

2 MATERIALS AND METHODS

2.1 Identifying regions of hg38/mm39 genome assemblies with sequence similarity to human/mouse reference rDNA

The full length rDNA sequence is ~45 kilobases (kb) in human and mouse[13,14], and the hg38 and mm39 assemblies contain numerous partial, fragmented, or repeated rDNA sequence stretches. To systematically identify these regions for masking, we used three methods: (i) We obtained from the USCS genome browser[15] a list of all Repeatmasker[16] annotations titled 'LSU-rRNA' or 'SSU-rRNA' (large and small subunit rRNA), which yielded 564 human and 507 mouse intervals. (ii) We obtained from NCBI Genbank[17] the reference sequences for human and mouse rDNA (KY962518.1[13] and BK000964.3[14] respectively), and used BLAT[18] to identify 107 human and 150 mouse genomic intervals with matches to the reference sequences. (iii) Modifying a previously reported approach[19], we fragmented the KY962518.1 and BK000964.3 rDNA gene reference sequences to a collection of 50 nucleotide (nt) "reads" that we mapped to the hg38 and mm39 genomes respectively using Bowtie2[20] with the -k 10 parameter to include multiple mapped locations. We then parsed the output SAM file to identify stretches of the genome with consecutive mapping of at least 8 of the fragmented "reads", including those in which adjacent stretches were separated by less than 200 nt. This identified 17 human and 18 mouse intervals. To add a buffer region, we extended intervals from (i) and (ii) by 100 nt upstream and downstream, and those from (iii) by 500 nt, and because several intervals were overlapping or redundant, we used the Merge tool in the public Galaxy server usegalaxy.org[21] to merge the interval groups and produce a final non-redundant set of intervals (Table S1). For human, we finalized a total of 473 intervals ranging from 226 to 271,228 nt in length, with mean and median lengths of 1,862 nt and 323 nt respectively. 4 human intervals were longer than 45 kb (the reference rDNA length), and on manual curation were all found to be composed of combinations of sequences corresponding to more than one rDNA copy. For mouse, we finalized a total of 516 intervals ranging from 223 to 31,550 nt in length, with mean and median lengths of 554 nt and 318 nt respectively.

2.2 Generating masked hg38/mm39 genome assemblies

We used the bedtools maskfasta[22] tool to mask the human and mouse rDNA-like loci in the hg38 and mm39 genomes, and masked a total of 880,516 nt and 285,953 nt respectively. We remapped the 50 nt fragmented reads generated from human and mouse rDNA reference (see section above) to the masked genomes of the respective species, and found no consecutive mapping of more than 8 reads, confirming adequate masking.

2.3 Adding human/mouse reference rDNA sequence to masked hg38/mm39 assemblies

The human KY962518.1 (44,838 nt) and mouse BK000964.3 (45,306 nt) reference rDNA sequences both start with the rRNA transcription start site (TSS) and end with the Pol I promoter. Given that these ~45 kb units are repeated in tandem arrays in NORs, their 3' ends can be seen as continuous with their 5' ends, and we therefore modified their sequences to bring their promoters upstream of their TSSs for ease of visualization. We did so by cutting the human KY962518.1 sequence at the 35,500 nt position and the mouse BK000964.3 sequence at the 36,000 nt position, and transposed the sequences downstream of the cut to upstream of the TSSs, such that in the modified orientation, the rDNA sequences began with ~10 kb of IGS before transitioning into promoters and transcribed regions (final orientation shown in Fig 1A). We chose the cut sites based on our rDNA mapping study of ~2200 ChIP-seq datasets[1], which did not show overlap of these sites with any transcription factor, chromatin protein, or histone modification peaks. We then added the modified rDNA reference sequences to the masked genomes of the respective species as an additional chromosome R (chrR) (Fig 1B). These assemblies have been deposited to GitHub as *hg38-rDNA v1.0* and *mm39-rDNA v1.0*.

2.4 Generating annotation files for hg38/mm39 assemblies containing chromosome R

We obtained from the USCS genome browser[15] the RefGene[23] annotation BED files for hg38/mm39 assemblies, and added chrR annotations depicting the known locations of spacer and 47S promoters, rRNA transcript segments, and TTF1 binding sites within the rDNA references[1,11,24]. The final files were confirmed to be compatible with the IGV browser[25] for visualization of chrR as well as for genome wide visualization of standard gene structures. These annotation BED files have been deposited to GitHub with the genomes.

3 RESULTS

3.1 Generation of customized human and mouse genomes with rDNA

Human KY962518.1 (44,838 nt) and mouse Genbank BK000964.3 (45,306 nt) reference rDNA sequences are available from NCBI Genbank[17], and are used in the literature as consensus reference rDNA sequences for their respective species[8,26–28]. Each reference contains two promoters (spacer promoter and 47S promoter), a 13.4 kb transcribed region, and intergenic spacer sequence (IGS) (Fig 1A). The human hg38 and mouse mm39 genome assemblies contain multiple partial, fragmented rDNA-matching loci. We identified and masked 473 and 516 such loci in human and mouse respectively (Table S1, see Methods), masking a total of 881 kb and 286 kb in hg38 and mm39 assemblies respectively. We then added to these masked genomes a single full-length rDNA sequence of the respective species as an additional chromosome R (chrR) to generate the *hg38-rDNA v1.0* and *mm39-rDNA v1.0* genomes (Fig 1B).

3.2 Workflow for mapping to customized genomes with rDNA

Aiming to make routine rDNA mapping accessible to users with no more than basic Linux command line experience, we designed a simple workflow optimized for mapping of high-throughput datasets to the

customized genomes (Fig 2). Given the repetitive nature of rDNA, and given that all reads deriving from rDNA will map to the custom chrR, even datasets with lower read numbers may give interpretable chrR coverage, however we recommend using datasets with at least 10 million total reads. We recommend running Trimmomatic[29] with standard parameters. We recommend Bowtie2[20] with -X 2000 parameter to permit paired-end sequence mapping with accommodation for 1-2 kb indel variation that has been documented in rDNA repeats[13]. We recommend filtering SAM files produced by Bowtie2 with Samtools view[30] -q 1 to allow for some residual multi-mapping that may occur despite genome masking. After sorting and indexing the resultant BAM files with Samtools[30], we recommend using DeepTools BamCoverage[31] with -bs 1 to generate nucleotide-resolution tracks. PCR duplicate removal is not recommended; dense overlapping read coverage is expected on chrR due to the presence of hundreds of rDNA copies per cell, leading to the unavoidable presence of independent reads with the same start and end sites, confounding PCR duplicate removal tools. Instead, to distinguish specific signal from background, artifact, or PCR duplication, the inclusion of at least two biological replicates, along with paired Input and/or IgG pulldown samples prepared through the same protocol and with the same number of PCR cycles, is strongly recommended. We also mention at the bottom of Fig 2 a method of track normalization, to be used if quantitative signal comparison between datasets is required.

3.3 Validation of customized genomes with rDNA

To validate the ability of our customized genomes and workflow to yield valid rDNA tracks, we picked four proteins whose rDNA ChIP-seq mapping patterns are known[1,11]: UBTF (HMG-box protein that binds and activates rDNA), POLR1A (core catalytic subunit of RNA Pol I), TBP (TATA-binding protein), and CTCF (Insulator transcription factor). Using the public repositories ENCODE[32] and GEO/SRAdb[33], we identified human and mouse ChIP-seq datasets for each of these factors, and downloaded their raw FASTQ files as well as their matched negative controls (Input or IgG deposited in the same accession) (links to original datasets are provided in Table S2). We passed these datasets through the workflow in Fig 2, and visualized BigWig (.bw) tracks on the IGV browser along with the genome and annotation files (Fig 3A, 3B). In all cases, negative controls (Input and IgG) showed flat background chrR coverage of significantly lower intensity compared to specific factor pulldown. UBTF and POLR1A showed the expected broad signal throughout the transcribed region, TBP showed the expected peaks at the spacer and 47S promoters, and CTCF showed the expected sharp peak slightly upstream of the TBP peak at the spacer promoter[1,11]. (Fig 3A, 3B). Thus, we have validated the customized genomes and the workflow for high-throughput dataset mapping.

DISCUSSION

The public availability of genome assemblies[34], enabling widespread profiling in diverse cell types of chromatin accessibility, histone modifications, transcription factor binding, and chromosome conformation, has facilitated unprecedented progress over the past two decades in our understanding of gene regulation in health and disease. However, certain regions of the genome remain poorly studied due to their repetitive nature[35].

Ribosomal DNA genes, organized in tandem arrays in NORs, are a prominent example. Due to the inability of standard genome assemblies and mapping pipelines to yield interpretable rDNA data, a stark contrast has emerged between the depth of our understanding of coding genes compared to rDNA genes. Given that rRNA is the most abundant cellular RNA, and accounts for the bulk of all transcription, this is a significant bioinformatic blind spot.

We attempt in this paper to address this blind spot by generating and depositing to GitHub customized human and mouse genomes containing a single copy of reference rDNA as an added chromosome, along with annotation files, sample tracks, and a simple mapping workflow. Our recent work[1] indicates that rDNA is bound and regulated in complex eukaryotes by a variety of cell-type-specific transcription factors. The implications of such binding for evolution, cell biology, development, and oncogenesis are substantial, and warrant a systematic exploration of whether modulation of ribosome production rates through control of rRNA transcription is a conserved function of many transcription factors and chromatin regulators, and whether this regulation is hijacked in malignancies to promote rapid ribosome biogenesis in service of rapid proliferation. Identification of such factors will only become possible with the routine incorporation of rDNA-containing genomes into mapping pipelines.

rDNA repeats, though fairly uniform in their tandem repeat arrangements, are not perfectly identical, and show variations in the form of single nucleotide polymorphisms scattered throughout the repeat, as well as small insertions and deletions in the IGS[13,28,36,37]. These variations can be seen between different repeats within the same cell as well as between different individuals within the same species. The next challenge for rDNA bioinformatics will be to accommodate rDNA variants. Continued work by the T2T Consortium[8] and the Human Pangenome Project[38] will, over time, reveal the full extent of variation in rDNA allele number and sequence in the human genome. We anticipate that future standard genome assemblies of all species will contain a systematized diversity of rDNA repeat sequences, and the next generation of mapping tools will need to grapple with the peculiar challenges of effectively mapping to these repetitive loci.

In summary, we provide in this paper customized genomes, annotation files, and a simple workflow to make human and mouse rDNA mapping accessible to non-specialists in ribosome biogenesis. We envision that routine integration of these genomes into standard bioinformatic pipelines will allow the discovery and characterization of novel regulators of rDNA relevant to normal and disease biology.

DATASETS

Customized genome assemblies (hg38-rDNA v1.0 and mm39-rDNA v1.0), annotation files, and positive and negative control mapping tracks are freely available through GitHub at:
https://github.com/vikramparalkar/rDNA-Mapping-Genomes

ACKNOWLEDGEMENTS

V.R.P is supported by the National Institute of General Medical Sciences (NIGMS) of the National Institutes of Health (NIH) under award number R35-GM138035.

AUTHOR CONTRIBUTIONS

V.R.P. conceived the project and supervised the study, with conceptual input from M.P. S.S.G. generated customized genomes, and optimized and executed all bioinformatic pipelines. S.S.G. and V.P. wrote the manuscript with input from M.P.

DECLARATION OF INTERESTS

The authors declare no competing interests.

Figure 1

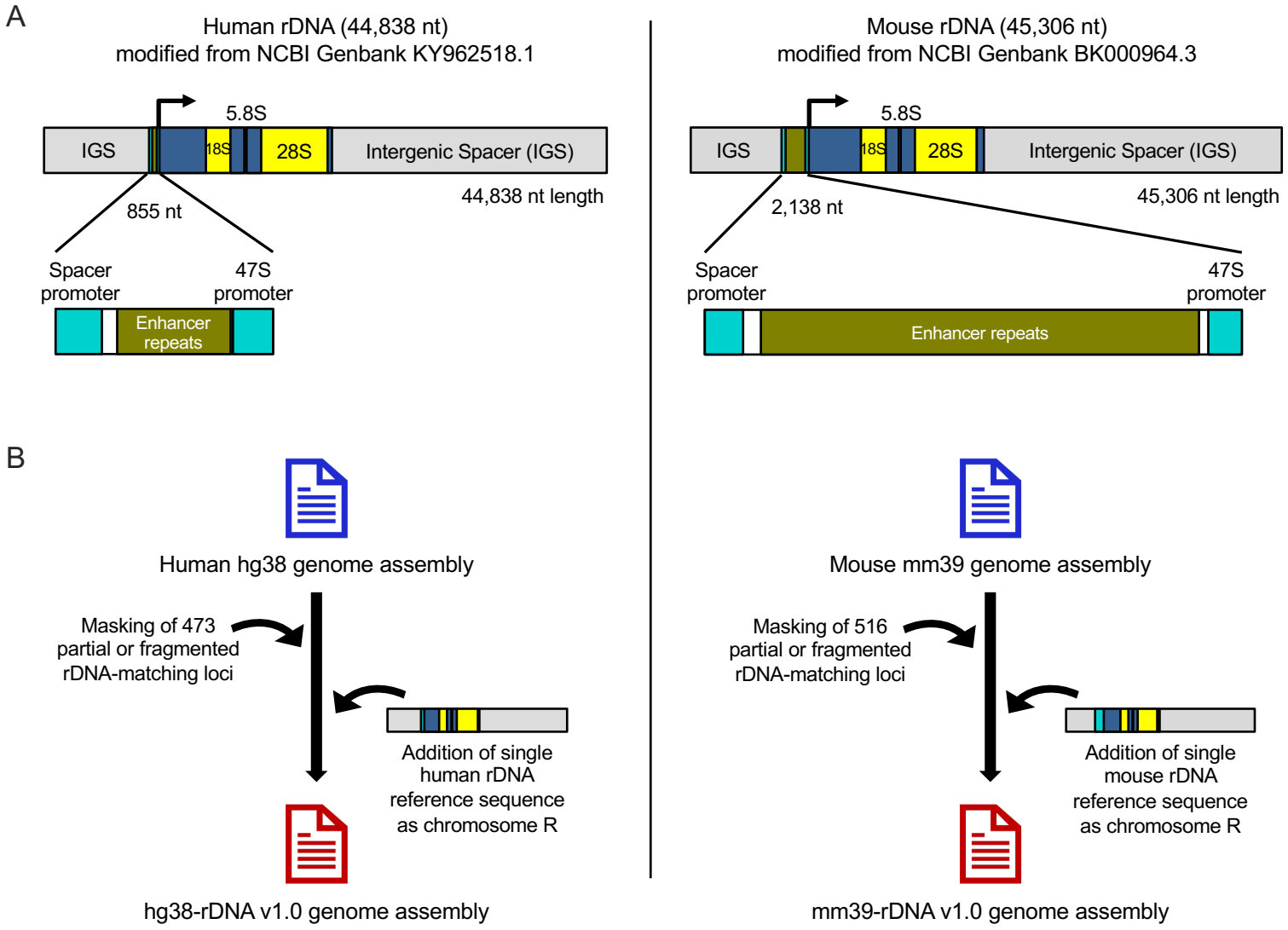
A
Human rDNA (44,838 nt)
modified from NCBI Genbank KY962518.1
5.8S
IGS
18S
28S
Intergenic Spacer (IGS)
44,838 nt length
855 nt
Spacer promoter
47S promoter
Enhancer repeats
Mouse rDNA (45,306 nt)
modified from NCBI Genbank BK000964.3
5.8S
IGS
18S
28S
Intergenic Spacer (IGS)
45,306 nt length
2,138 nt
Spacer promoter
47S promoter
Enhancer repeats
B
Human hg38 genome assembly
Masking of 473 partial or fragmented rDNA-matching loci
Addition of single human rDNA reference sequence as chromosome R
hg38-rDNA v1.0 genome assembly
Mouse mm39 genome assembly
Masking of 516 partial or fragmented rDNA-matching loci
Addition of single mouse rDNA reference sequence as chromosome R
mm39-rDNA v1.0 genome assembly

Figure 1. Generation of customized human and mouse genomes with rDNA

(A) Schematic of human and mouse reference rDNA: Reference human (NCBI Genbank KY962518.1) and mouse (NCBI Genbank BK000964.3) rDNA sequences, modified by cutting the original Genbank references at 35,500 and 36,000 nt positions respectively, and transposing the downstream sequence (containing the terminal part of IGS and promoters) upstream of the transcription start site. The transcribed region is depicted in blue and yellow bands, with the sequences corresponding to mature 18S, 5.8S, 28S rRNAs in yellow and those corresponding to external and internal transcribed spacers (ETS and ITS) in blue. The intergenic spacer (IGS) is shown in grey, and promoters are shown in inset detail, with spacer and 47S promoters in cyan. The same colors are used to mark rDNA regions in the annotation BED files deposited to GitHub.

(B) Generation of custom genomes: 473 human and 516 mouse regions, identified as containing fragmented rDNA sequences, were masked from the hg38 and mm39 genome assemblies respectively, and a reference rDNA sequence of the appropriate species was added on as chromosome R (chrR) to each masked genome to generate the *hg38-rDNA v1.0* and *mm39-rDNA v1.0* genomes respectively.

Figure 2

Workflow for custom rDNA genome mapping

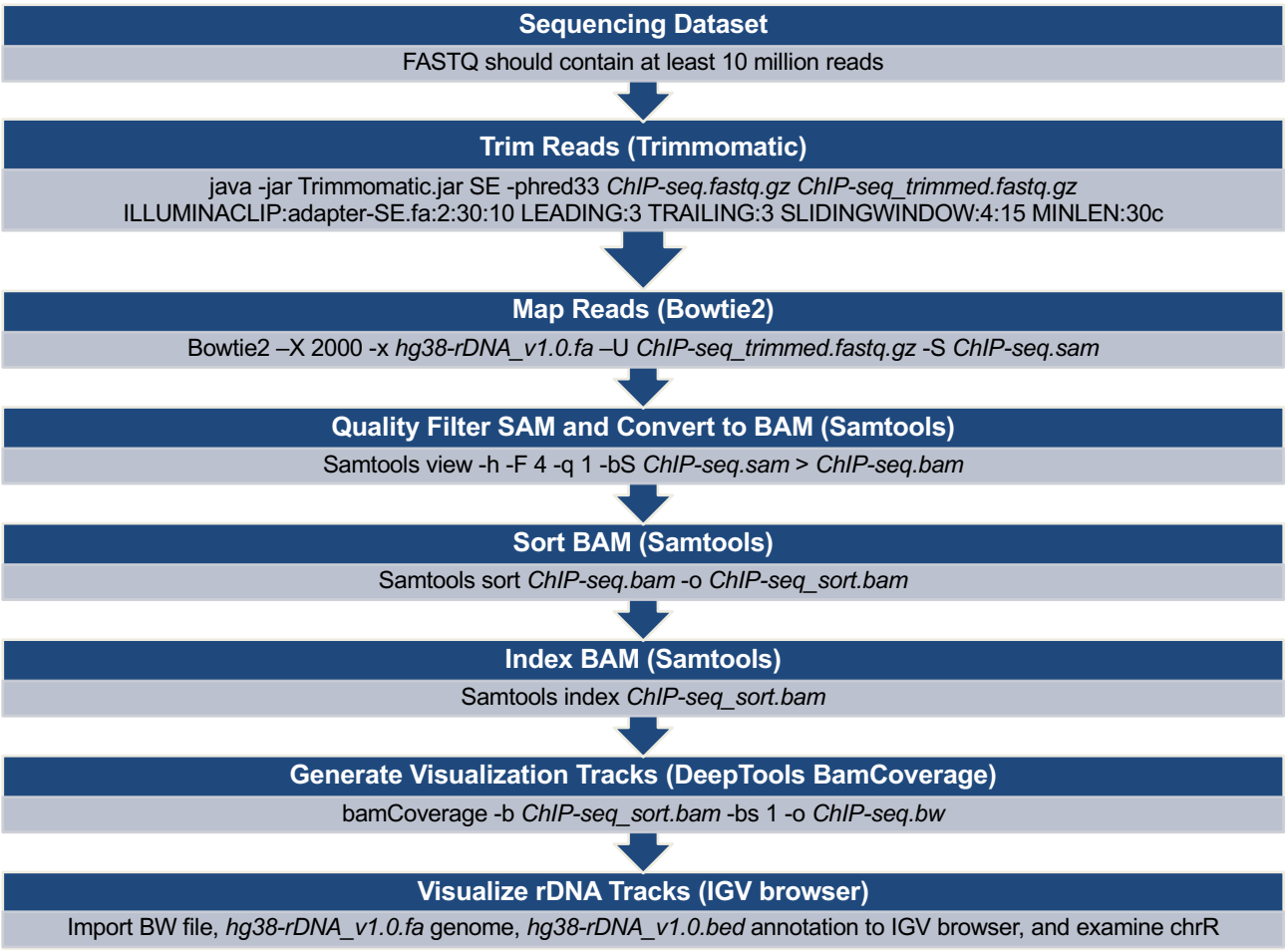

Additional or optional parameters:

- Trimmomatic: Use SE or PE for single vs paired-end reads per standard parameters. For increased speed with greater memory usage, may run with “-threads 8” or “-threads 16” parameter.

- Bowtie2: For increased speed with greater memory usage, may run with “-p 8” or “-p 16” parameter.

- BamCoverage:
    - Normalization is not required for basic exploratory mapping, but if planning to compare mapping signal between datasets, BamCoverage may be run with the “--scaleFactor” parameter, providing an arbitrary scaling number inversely proportional to the total sequenced reads per dataset. Default scaleFactor is 1.
    - For rapid track generation restricted to rDNA, may use “--region chrR”, which will output only chrR coverage.
    - May use larger bin size “-bs” for faster speed but lower nucleotide resolution coverage.

- PCR duplicates: We do not recommend removing PCR duplicates.

Figure 2. Workflow for mapping to customized genomes with rDNA

Stepwise workflow for mapping of hypothetical high-throughput dataset *ChIP-seq.fastq.gz* to rDNA, involving sequential steps of adapter trimming with Trimmomatic, mapping with Bowtie2, quality filtering with Samtools view, and generation of visualization tracks with BamCoverage. Additional or optional parameters are provided below the workflow.

Figure 3

A

Human chrR ChIP-seq tracks of core rDNA transcriptional machinery

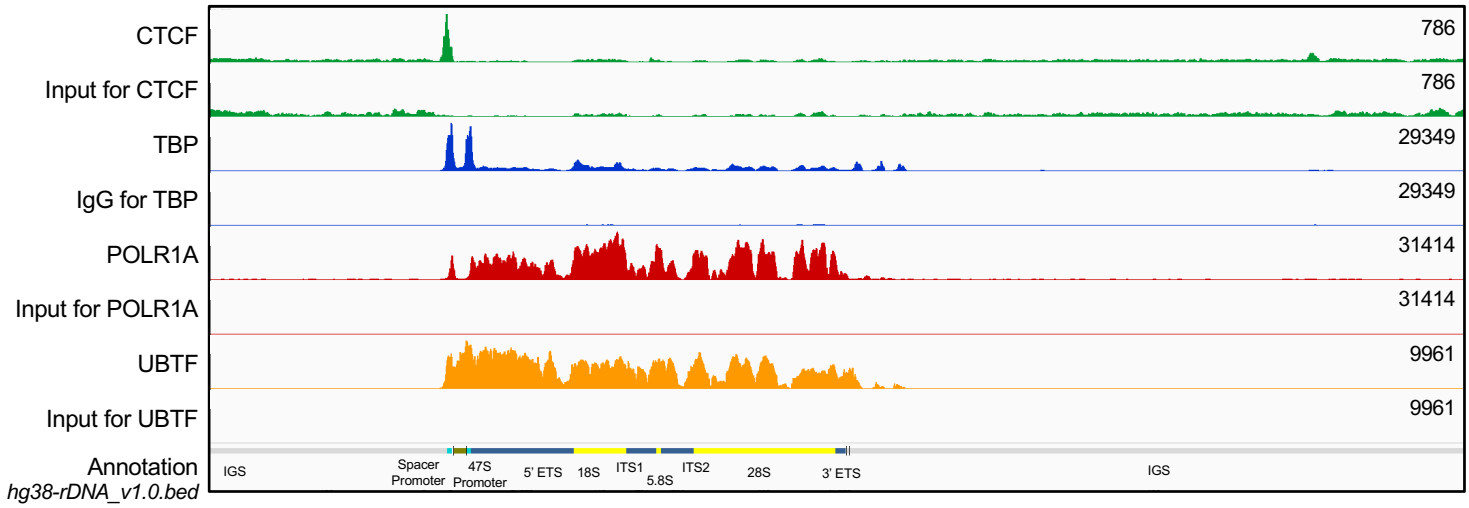

B

Mouse chrR ChIP-seq tracks of core rDNA transcriptional machinery

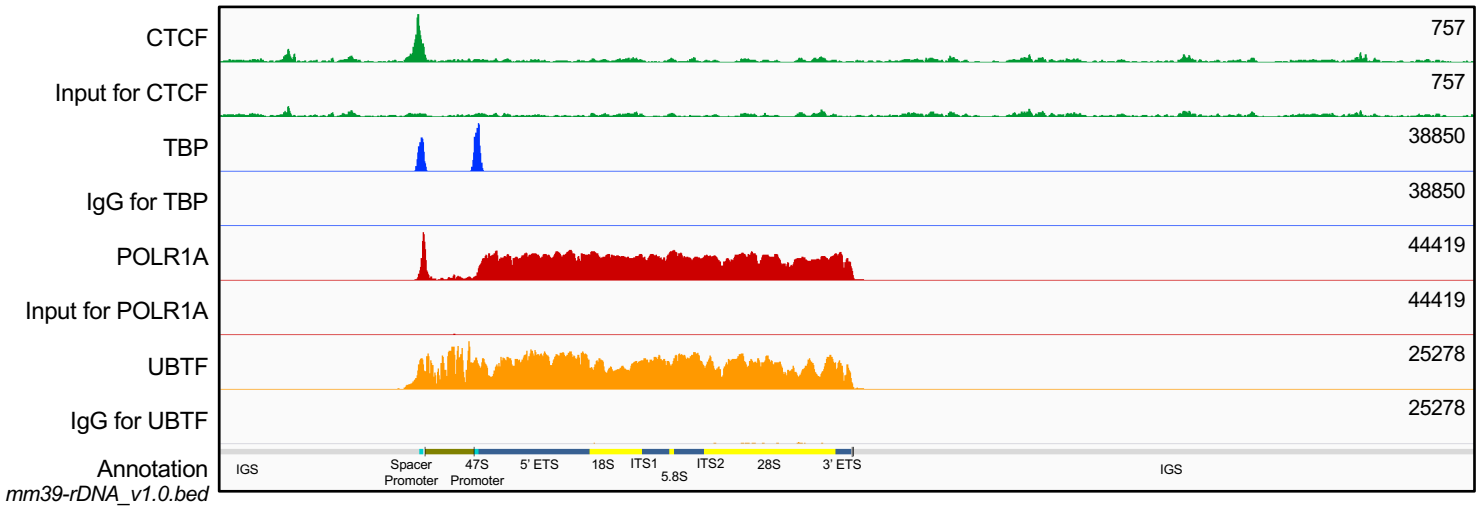

Figure 3: Validation of customized genomes with rDNA

IGV browser track visualizations of: (A) Human chrR ChIP-seq mapping of known rDNA binding proteins CTCF, TBP, POLR1A, and UBTF as positive controls, with matched Input or IgG as negative controls. (B) Mouse chrR ChIP-seq mapping of known rDNA binding proteins CTCF, TBP, POLR1A, and UBTF as positive controls, with matched Input or IgG as negative controls. Factor names are listed on the left, and Y-axis scale of each track is listed on the right. Matched pairs of positive and negative control tracks have been set to the same Y-axis scale. At the base of each image are rDNA segment annotations. 5' ETS and 3' ETS are External Transcribed Spacers, ITS1 and ITS2 are Internal Transcribed Spacers. IGS is the Intergenic Spacer.

REFERENCES

1. Antony C, George SS, Blum J, et al. Control of ribosomal RNA synthesis by hematopoietic transcription factors. *Mol. Cell*. 2022;
2. Baßler J, Hurt E. Eukaryotic Ribosome Assembly. *Annu. Rev. Biochem.* 2019;88:281–306.
3. Long EO, Dawid IB. Repeated Genes in Eukaryotes. *Annual Review of Biochemistry*. 1980;49(1):727–764.
4. Henderson AS, Warburton D, Atwood KC. Location of ribosomal DNA in the human chromosome complement. *Proc. Natl. Acad. Sci. U. S. A.* 1972;69(11):3394–3398.
5. Dev VG, Tantravahi R, Miller DA, Miller OJ. Nucleolus organizers in Mus musculus subspecies and in the RAG mouse cell line. *Genetics*. 1977;86(2 Pt. 1):389–398.
6. Miller OL, Beatty BR. Visualization of Nucleolar Genes. *Science*. 1969;164(3882):955–957.
7. Pederson T. The nucleolus. *Cold Spring Harb. Perspect. Biol.* 2011;3:a000638.
8. Nurk S, Koren S, Rhie A, et al. The complete sequence of a human genome. *Science*. 2022;376(6588):44–53.
9. Zentner GE, Saiakhova A, Manaenkov P, Adams MD, Scacheri PC. Integrative genomic analysis of human ribosomal DNA. *Nucleic Acids Res.* 2011;39(12):4949–4960.
10. Zentner GE, Balow SA, Scacheri PC. Genomic characterization of the mouse ribosomal DNA locus. *G3* . 2014;4(2):243–254.
11. Herdman C, Mars J-C, Stefanovsky VY, et al. A unique enhancer boundary complex on the mouse ribosomal RNA genes persists after loss of Rrn3 or UBF and the inactivation of RNA polymerase I transcription. *PLoS Genet.* 2017;13(7):e1006899.
12. Diesch J, Bywater MJ, Sanij E, et al. Changes in long-range rDNA-genomic interactions associate with altered RNA polymerase II gene programs during malignant transformation. *Commun Biol*. 2019;2:39.
13. Kim J-H, Dilthey AT, Nagaraja R, et al. Variation in human chromosome 21 ribosomal RNA genes characterized by TAR cloning and long-read sequencing. *Nucleic Acids Res.* 2018;46(13):6712–6725.
14. Grozdanov P, Georgiev O, Karagyozov L. Complete sequence of the 45-kb mouse ribosomal DNA repeat: analysis of the intergenic spacer. *Genomics*. 2003;82(6):637–643.
15. Kent WJ. The Human Genome Browser at UCSC. *Genome Research*. 2002;12(6):996–1006.
16. Bao W, Kojima KK, Kohany O. Repbase Update, a database of repetitive elements in eukaryotic genomes. *Mob. DNA*. 2015;6:11.
17. Sayers EW, Bolton EE, Brister JR, et al. Database resources of the national center for biotechnology information. *Nucleic Acids Res.* 2022;50(D1):D20–D26.
18. Kent WJ. BLAT--the BLAST-like alignment tool. *Genome Res.* 2002;12(4):656–664.
19. Mars J-C, Sabourin-Felix M, Tremblay MG, Moss T. A Deconvolution Protocol for ChIP-Seq Reveals Analogous Enhancer Structures on the Mouse and Human Ribosomal RNA Genes. *G3* . 2018;8(1):303–314.
20. Langmead B, Salzberg SL. Fast gapped-read alignment with Bowtie 2. *Nat. Methods*. 2012;9(4):357–359.
21. Galaxy Community. The Galaxy platform for accessible, reproducible and collaborative biomedical analyses: 2022 update. *Nucleic Acids Res.* 2022;
22. Quinlan AR, Hall IM. BEDTools: a flexible suite of utilities for comparing genomic features. *Bioinformatics*. 2010;26(6):841–842.
23. O'Leary NA, Wright MW, Brister JR, et al. Reference sequence (RefSeq) database at NCBI: current status, taxonomic expansion, and functional annotation. *Nucleic Acids Res.* 2016;44(D1):D733–45.
24. Diermeier SD, Németh A, Rehli M, Grummt I, Längst G. Chromatin-specific regulation of mammalian rDNA transcription by clustered TTF-I binding sites. *PLoS Genet.* 2013;9(9):e1003786.
25. Robinson JT, Thorvaldsdóttir H, Winckler W, et al. Integrative genomics viewer. *Nature Biotechnology*. 2011;29(1):24–26.
26. Henras AK, Plisson-Chastang C, O'Donohue M-F, Chakraborty A, Gleizes P-E. An overview of pre-ribosomal RNA processing in eukaryotes. *Wiley Interdisciplinary Reviews: RNA*. 2015;6(2):225–242.
27. Agrawal S, Ganley ARD. The conservation landscape of the human ribosomal RNA gene repeats. *PLoS One*. 2018;13(12):e0207531.
28. Hori Y, Shimamoto A, Kobayashi T. The human ribosomal DNA array is composed of highly homogenized tandem clusters. *Genome Res.* 2021;31(11):1971–1982.

29. Bolger AM, Lohse M, Usadel B. Trimmomatic: a flexible trimmer for Illumina sequence data. *Bioinformatics*. 2014;30(15):2114–2120.
30. Li H, Handsaker B, Wysoker A, et al. The Sequence Alignment/Map format and SAMtools. *Bioinformatics*. 2009;25(16):2078–2079.
31. Ramírez F, Ryan DP, Grüning B, et al. deepTools2: a next generation web server for deep-sequencing data analysis. *Nucleic Acids Res.* 2016;44(W1):W160–5.
32. ENCODE Project Consortium. An integrated encyclopedia of DNA elements in the human genome. *Nature*. 2012;489(7414):57–74.
33. Barrett T, Wilhite SE, Ledoux P, et al. NCBI GEO: archive for functional genomics data sets--update. *Nucleic Acids Res.* 2013;41(Database issue):D991–5.
34. Gates AJ, Gysi DM, Kellis M, Barabási A-L. A wealth of discovery built on the Human Genome Project - by the numbers. *Nature*. 2021;590(7845):212–215.
35. Treangen TJ, Salzberg SL. Repetitive DNA and next-generation sequencing: computational challenges and solutions. *Nat. Rev. Genet.* 2011;13(1):36–46.
36. Parks MM, Kurylo CM, Dass RA, et al. Variant ribosomal RNA alleles are conserved and exhibit tissue-specific expression. *Sci Adv*. 2018;4(2):eaao0665.
37. Fan W, Eklund E, Sherman RM, et al. Widespread genetic heterogeneity of human ribosomal RNA genes. *RNA*. 2022;28(4):478–492.
38. Wang T, Antonacci-Fulton L, Howe K, et al. The Human Pangenome Project: a global resource to map genomic diversity. *Nature*. 2022;604(7906):437–446.