Switching state-space modeling of neural signal dynamics

Mingjian He[1,2◑], Proloy Das[1,4◑], Gladia Hotan[3], Patrick L. Purdon[1,4,*]

1 Department of Anesthesia, Critical Care and Pain Medicine, Massachusetts General Hospital, Boston, MA, USA

2 Harvard-MIT Health Sciences and Technology, Massachusetts Institute of Technology, Cambridge, MA, USA

3 Institute of High Performance Computing, Agency for Science, Technology and Research (A*STAR), Singapore

4 Harvard Medical School, Boston, MA

[◑]These authors contributed equally to this work.

[*]Corresponding Author: patrick.purdon@mgh.harvard.edu

Abstract

Linear parametric state-space models are a ubiquitous tool for analyzing neural time series data, providing a way to characterize the underlying brain dynamics with much greater statistical efficiency than non-parametric data analysis approaches. However, neural time series data are frequently non-stationary, exhibiting rapid changes in dynamics, with transient activity that is often the key feature of interest in the data. Stationary methods can be adapted to time-varying scenarios by employing fixed-duration windows under an assumption of quasi-stationarity. But time-varying dynamics can be explicitly modeled by switching state-space models, i.e., by using a pool of state-space models with different properties selected by a probabilistic switching process. Unfortunately, unlike linear state-space models, exact solutions for state inference and parameter learning with switching state-space models are intractable. Here we derive a solution to the inference problem for a general probabilistic switching state-space framework based on a variational approximation on the joint posterior

distribution of the underlying states and the switching process. We then use this state-inference solution within a generalized expectation-maximization (EM) algorithm to learn the model parameters of the linear state-space models and the switching process. We perform extensive simulations in different settings to benchmark the performance of our method against existing switching inference methods. We also demonstrate the robustness of our switching inference to characterize dynamics outside the generative switching model class. In addition, we introduce a novel initialization strategy for the expectation step of the generalized EM algorithm using a leave-one-out strategy to compare among candidate models, which significantly improves performance compared to existing switching methods that employ deterministic annealing. Finally, we demonstrate the utility of our method for the problem of sleep spindle detection, showing how switching state-space models can be used to detect and extract transient spindles from human sleep electroencephalograms in an unsupervised manner.

Author summary

An inherent aspect of brain activity is that it changes over time, but existing methods for analyzing neuroscience data typically assume that the underlying activity is stationary, i.e., the properties of that activity do not change over time. One way of handling time-varying data is to break the data into smaller segments that one assumes to be stationary, but this approach only works if signals vary gradually, and tends to perform poorly when changes are rapid or the target activity is transient in nature. A class of models called linear switching state-space models can explicitly represent time-varying activity, but they present another set of challenges: exact solutions for such models are intractable, and existing approximate solutions can be highly inaccurate. In this work we derive a new solution for linear switching state-space models that is able to accurately recover the underlying states and model parameters for time-varying dynamics in a way that is robust to model mis-specification and that outperforms previously proposed methods. We demonstrate the usefulness of our method by applying it to the problem of sleep spindle detection and show that switching state-space models can automatically detect spindles from human sleep electroencephalograms.

Introduction

State-space modeling is a promising and versatile analytic approach for characterizing neural signals that has received substantial attention over many decades [1]. State-space models can be highly effective for analyzing neural time series data, particularly if the model formulation and parameterization are able to accurately represent the dynamics of the data generating process [2–4]. Powerful neural data analysis methods have been developed using stationary linear models [1, 5–9], for which inference and learning algorithms can be readily derived using well-established methods. However, real neural signals are more often non-linear and non-stationary, due to either intrinsic fluctuations of physiological states or extrinsic influences from cognitive and environmental processes [10–15]. Accordingly, mismatches between chosen state-space models and true underlying dynamical processes can be a major source of error in such algorithms [16].

In practice, researchers can manage non-stationarity by allowing the model parameters to vary across time or fitting different model parameters to consecutive windows of data. Thresholds can also be used to exclude outliers and limit the range of time series data within some neighborhood where a stationary approximation remains valid. These approaches can be effective when the temporal variation can be tracked by changing parameter values within a given model class, or when the temporal dynamics evolve slowly compared to the window length. However, they fall short when the neural signals of interest are by definition transient. Examples of such transient activity are abundant in neuroscience, including epileptic bursts, ripples, or event-related potentials [17–21]. In other scenarios, neural dynamics can change abruptly at unpredictable times, for instance, during anesthesia-induced burst-suppression, different stages of sleep, or modulations from active learning and behavioral responses [22–30]. Time-varying parameters or windowed approximations would perform sub-optimally at best in these cases, and could miss rapid transitions in the dynamics if the scale of temporal variation or window length is mis-specified.

State-space models with switching have been proposed to represent signals that are composed of multiple segments with different dynamics, under the assumption that each segment is approximately linear and stationary. Two distinct approaches have been taken to develop corresponding algorithms for these switching state-space models. In

one approach, approximate solutions were developed based on existing solutions [31] to stationary Gaussian state-space models, or Gaussian SSM for short. These early studies recognized the intractability of accounting for all possible switching transitions whose combinations grow exponentially with the length of the time series [32, 33]. Nevertheless, efficient inference algorithms have been developed by assuming that the transitions between multiple state-space dynamics follow a hidden Markov model (HMM) process and by approximating the conditional means and covariances of Gaussian hidden states [34–38]. These methods have focused on the filtered estimates of the switching model probabilities and therefore on the ability to forecast a transition in dynamics. While this inference is relevant in control systems and econometrics, data analysis questions in neuroscience are more often centered on segmenting a time series into periods with distinct neural dynamics and subsequently characterizing the properties of those dynamics. Likely for this reason, these inference algorithms have not been extensively applied in neural signal processing.

In another more recent approach, advances in Bayesian methods have enabled the development of several algorithms for switching state-space models incorporating both linear and non-linear dynamics [39–41]. These methods apply carefully constrained approximations to represent a broader range of switching processes besides the Markov process used in the HMM. Markov chain Monte Carlo sampling techniques are used to perform inference and learning for these models, which may be computationally burdensome for large data sets collected in neuroscience studies. Moreover, the nonparametric formulation of these algorithms may not be easily interpretable in relation to the neural mechanisms being studied. Similarly, under these methods it is difficult to constrain the switching inferences to candidate models formed from clinical or neuroscience domain knowledge. Perhaps due to these challenges, these more recent Bayesian algorithms have also not been widely adopted to study neural data with time-varying dynamics.

In 2000 Ghahramani and Hinton proposed an insightful solution for switching state-space models inspired by variational approximations from graphical models [42]. They employed generative models similar to the hybrid models combining Gaussian SSMs and HMM, but they derived approximate inference and learning computations akin to those in more recent Bayesian methods. The Ghahramani and Hinton algorithm

is uniquely situated between the above two eras of research on switching state-space models, and it provides an opportunity to combine the strengths from both approaches to study quasi-stationary neural activity using interpretable models and optimized approximations. Despite the important and significant conceptual advance described by Ghahramani and Hinton, its applications in neuroscience have also been limited. Overall, the likelihood function for switching state-space models is non-convex and solutions are therefore sensitive to the initialization conditions. To address this issue, Ghahramani and Hinton used deterministic annealing, enabling the algorithm to perform comparably to past inference methods, but with little improvement. Moreover, the complexity of the algorithm and its computational requirements may have limited its adoption.

In this paper we introduce methods to significantly improve switching state-space model inference and learning under the framework initially proposed by Ghahramani and Hinton. First, we present a simple and intuitive derivation of this algorithm under the variational Bayes and expectation-maximization (EM) frameworks, complete with all closed-form equations involved along with practical considerations when applying this method to neuroscience problems. We then describe a novel initialization procedure that addresses the crucial challenge of navigating the non-concave log-likelihood function to find relevant optimal solutions. We show results on how this method significantly improves over deterministic annealing, enabling variational inference to outperform past inference algorithms. We also show that our approach improves parameter recovery, which makes it possible to more accurately characterize non-stationary dynamics. We then extend the generative model structure to accommodate more complicated switching state-space models including nested models, which are frequently encountered in many applications including neuroscience. Finally, we apply our variational Bayesian learning algorithm to a long-standing problem of sleep spindle detection from electroencephalography (EEG) recordings during sleep in humans and show compelling results that our method can reliably identify transient neural activity.

Results

Throughout this work, we use regular and boldface lowercase letters to denote scalars and vectors, respectively. Matrices are denoted by boldface uppercase letters or by regular uppercase letters when the matrices are one-dimensional. The transpose of a matrix $\mathbf{M}$ is denoted by $\mathbf{M}^\top$, and $\mathbf{M}_{ij}$ indicates the element of the matrix at the ith row and jth column position. A variable indexed with another discrete variable s taking values in $\{1, \cdots, M\}$, e.g., $z^{(s)}$, refers to the following:

$$z^{(s)} = \begin{cases} z^{(1)} & s = 1 \\ z^{(2)} & s = 2 \\ \vdots & \\ z^{(M)} & s = M \end{cases}$$

We consider switching state-space models to consist of a set of M uncorrelated linear Gaussian SSMs encoding arbitrarily distinct dynamics and an HMM of a discrete variable s taking values in $\{1, \cdots, M\}$. The latent states of these models evolve in parallel and are allowed to be of different dimensions with appropriate mapping to observations. At every time point, the HMM selects one of the Gaussian SSMs to generate the observed data, giving rise to the switching behavior of this generative model. However, this flexible switching structure comes with high computational complexity: exact inference of the hidden states from observed data quickly becomes intractable, even for $M = 2$ with moderately long time series.

It has been noted that when the switching states are known, the hidden states of Gaussian SSMs can be efficiently estimated. Conversely, one can infer the hidden HMM states given the Gaussian SSM states [42]. Based on this insight, the intractability can be avoided by using a surrogate distribution, q, which approximates the intractable posterior, p. Specifically, we introduce two auxiliary variables $g_t^{(m)}$ and $h_t^{(m)}$: $g_t^{(m)}$ acts as the model evidence for the mth Gaussian SSM to produce the observed data in the absence of known Gaussian SSM states, while $h_t^{(m)}$ represents the model responsibility for the mth Gaussian SSM to explain the observed data when the switching states are unknown. Therefore, alternately updating $g_t^{(m)}$ and $h_t^{(m)}$ allows us to efficiently

estimate all hidden states. The functional forms of these variables are obtained by maximizing a closeness metric between the two distributions p and q. This procedure is known as variational approximation [43, 44]. We can also use this approximate variational inference within an instance of generalized EM algorithm to learn (fine-tune) the Gaussian SSM and HMM parameters when the model parameters are unknown (unsatisfactory). Fig 1 outlines this variational Bayesian learning algorithm for switching state-space models, with further details in Materials and methods.

In the following results sections, we show simulation examples to assess the performance of such variational inference and learning. As a performance metric, we evaluate the segmentation accuracy of a time series by the learned switching states against the ground truth. We then model human sleep EEG using switching state-space models and apply the proposed algorithm to detect the occurrence of sleep spindles in a completely unsupervised manner.

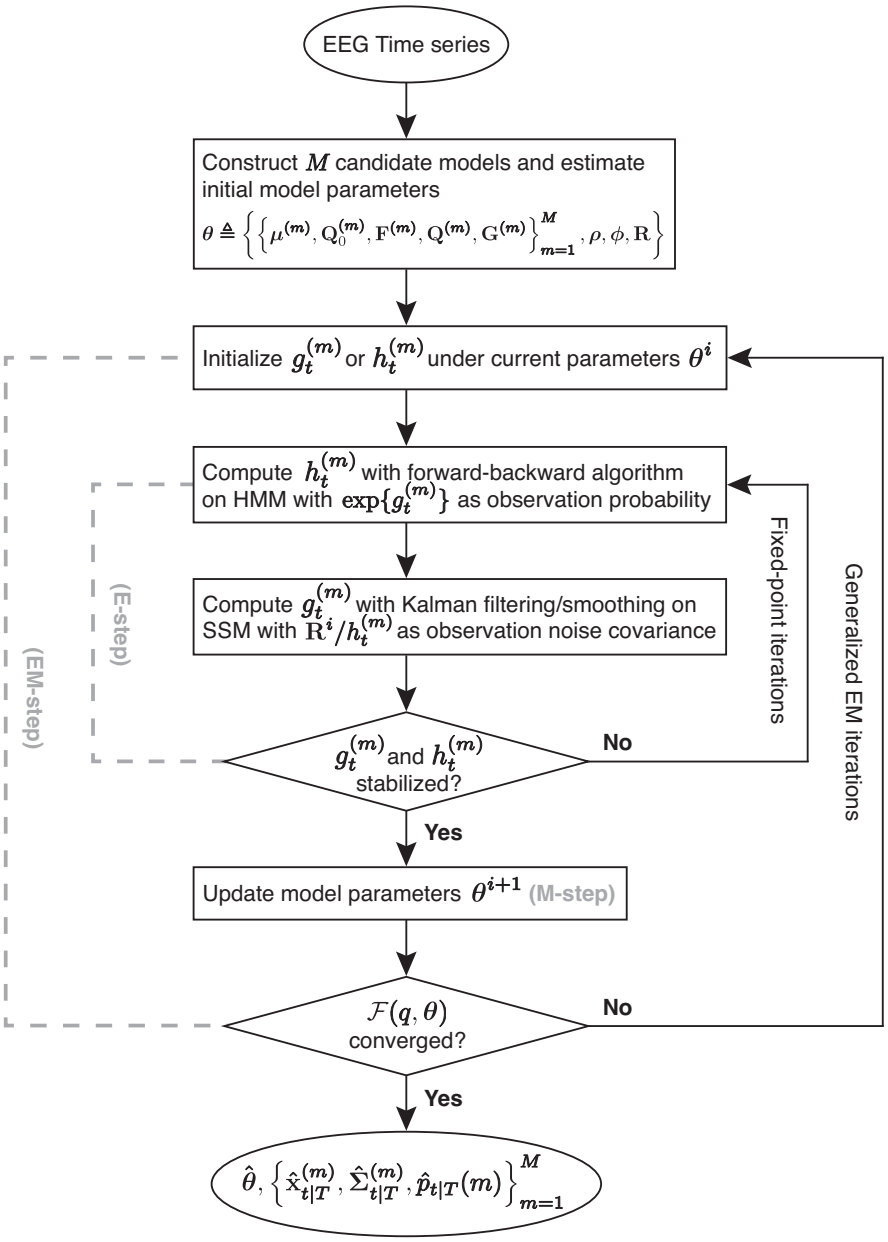

Fig 1. Flowchart of the variational Bayesian learning as an instance of generalized EM algorithm. M Gaussian SSMs, indexed by $m \in \{1, \cdots, M\}$, is parameterized by $\left\{ \boldsymbol{\mu}^{(m)}, \mathbf{Q}_0^{(m)}, \mathbf{F}^{(m)}, \mathbf{Q}^{(m)}, \mathbf{G}^{(m)} \right\}$ and augmented with an HMM parameterized by $\boldsymbol{\rho}$ and $\boldsymbol{\phi}$. The HMM determines the switching among the Gaussian SSMs to produce observed data. The observations are corrupted by observation noise with covariance $\mathbf{R}$ and indexed by $t \in \{1, \cdots, T\}$. We introduce $g_t^{(m)}$ and $h_t^{(m)}$, two variational summary statistics, to approximate the true posterior distribution p with a different distribution q. The E-step requires inference of the hidden states, achieved through fixed-point iterations that improve the variational approximation incrementally. Once the E-step has stabilized, model parameters are updated in the M-step. The convergence of the inner (E-step) iterations and outer (EM) iterations, index by i, is checked using the negative variational free energy $\mathcal{F}(q, \boldsymbol{\theta})$. This algorithm outputs 1) posterior estimates of model parameters, $\hat{\boldsymbol{\theta}}$, 2) state inferences, i.e., the means and covariances of Gaussian SSM hidden states, $\hat{\mathbf{x}}_{t|T}^{(m)}$ and $\hat{\boldsymbol{\Sigma}}_{t|T}^{(m)}$, and 3) estimates of M model probabilities of generating the observation at each time point, $\hat{p}_{t|T}(m)$.

Segmentation with posterior inference

We first focus on the variational inference part (E-step) of the algorithm that approximates the true posterior distribution p with a structured approximate posterior distribution q via fixed-point iterations (see the Variational approximation of hidden state posterior section of Materials of methods). One novel feature of our approach is that, instead of using deterministic annealing [42], we initialize the E-step with an "interpolated density" of the data at a given point in time, conditioned on all other time points. This density makes it possible to compare the candidate models at each time point and establish the initial weights for the HMM states. To demonstrate the advantage of this initialization procedure, we repeated the simulations from [42] using the following switching autoregressive (AR) models of order 1:

$$
\begin{aligned}
x_t^{(1)} &= 0.99\, x_{t-1}^{(1)} + w_t^{(1)}, \quad & w_t^{(1)} &\sim \mathcal{N}(0,1) \\
x_t^{(2)} &= 0.90\, x_{t-1}^{(2)} + w_t^{(2)}, \quad & w_t^{(2)} &\sim \mathcal{N}(0,10) \\
y_t &= x_t^{(s_t)} + v_t, & v_t &\sim \mathcal{N}(0,0.1)
\end{aligned}
$$

The starting points for each AR model were drawn from the same distribution as their respective state noises. The switching state s_t followed a binary HMM process with initial priors $\boldsymbol{\rho}_1 = \boldsymbol{\rho}_2 = 0.5$ and a symmetric state-transition probability matrix with $\boldsymbol{\phi}_{11} = \boldsymbol{\phi}_{22} = 0.95, \boldsymbol{\phi}_{12} = \boldsymbol{\phi}_{21} = 0.05$. We generated 200 sequences of 200 time points from the above generative model and analyzed the segmentation accuracy of inference algorithms given the true parameters.

Four inference algorithms were compared: static switching [33], interacting multiple models (IMM) [35], variational inference with deterministic annealing (VI-A) [42], and our proposed variational inference with interpolated densities (VI-I). Static switching assumes the switching state s_t to be independent across time points and applies the Bayes rule directly for switching inference [33]. IMM utilizes Gaussian merging to approximate the posterior distribution at each time point to estimate the switching state [35]. VI-A was initialized with a temperature parameter $\mathcal{T} = 100$ that decreased to $\mathcal{T} = 1$ over 12 fixed-point iterations with $\mathcal{T}_{i+1} = \frac{1}{2}\mathcal{T}_i + \frac{1}{2}$. For comparison, VI-I also ran for 12 fixed-point iterations. The estimated switching state at every time point was

determined with a decision threshold of 0.5 on the posterior model probabilities.

An example simulated y is shown in Fig 2a along with the estimated switching state by random segmentation and the four inference algorithms. Histograms of percentage correct segmentation (Fig 2b) verify that the same results of VI-A are obtained as in [42] with mean accuracy 0.810. Surprisingly, both static switching and IMM were more accurate, with means at 0.827 and 0.864, respectively. VI-I achieved the best mean accuracy at 0.890, surpassing all the other algorithms. The precision of correct segmentation, i.e., the width of the histograms in Fig 2b, also appears better for the static switching, IMM, and VI-I compared to VI-A.

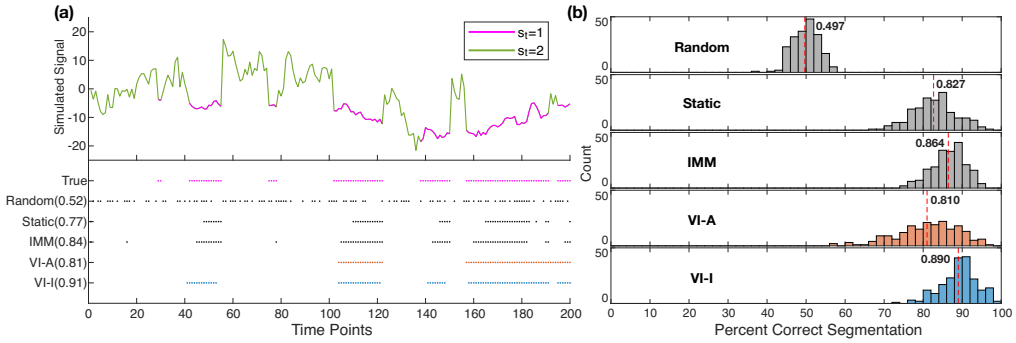

Fig 2. Simulation segmentation results given true parameters. (a) An example simulated sequence switching between two AR1 models with different dynamics. The top panel shows the time trace with the two states marked in different colors. The bottom panel shows the results of switching inference on this example simulated data given true parameters of the underlying generative model. Time points estimated to be in the first model ($s_t = 1$) are marked in colored dots for each inference method. Accuracy of each method in inferred switching across the 200 time points is displayed in parentheses. (b) Histograms of segmentation accuracy across 200 iterations. The mean segmentation accuracy for each method is displayed and marked by the dashed red line. True = simulated switching states; Random = random segmentation with a Bernoulli process; Static = static switching method; IMM = interacting multiple models method; VI-A = variational inference with deterministic annealing (orange color); VI-I = variational inference with interpolated densities (blue color).

Segmentation with parameter learning

An important advantage of the variational Bayesian framework over other approximate inference algorithms is the ability to learn model parameters using a generalized version of EM. When the underlying parameters are unknown, an accurate learning algorithm can improve segmentation performance over an arbitrary selection of parameters; conversely, if the learning algorithm is inaccurate, segmentation could become unreliable.

To investigate switching segmentation when the parameters are unknown and must be learned from data, we conducted simulations similar to the experiment above using the following generative model:

$$
\begin{aligned}
x_t^{(1)} &= 0.90\, x_{t-1}^{(1)} + w_t^{(1)}, \quad & w_t^{(1)} &\sim \mathcal{N}(0, 2) \\
x_t^{(2)} &= 0.70\, x_{t-1}^{(2)} + w_t^{(2)}, \quad & w_t^{(2)} &\sim \mathcal{N}(0, 10) \\
y_t &= x_t^{(s_t)} + v_t, & v_t &\sim \mathcal{N}(0, 0.1)
\end{aligned}
$$

Initial state values followed their model-specific state noise distributions. An identical HMM process as before was used for the switching state s_t, and we again generated 200 sequences of 200 time points. Instead of providing inference algorithms with the true parameters, we initialized all algorithms with random parameters drawn from uniform distributions centered around the true values for the lth sequence:

$$
\begin{aligned}
F^{(1)} &= 0.90, & F_l^{(1)} &\sim \mathcal{U}_{[0.8,1.0]} \\
F^{(2)} &= 0.70, & F_l^{(2)} &\sim \mathcal{U}_{[0.6,0.8]} \\
Q^{(1)} &= 2, & Q_l^{(1)} &\sim \mathcal{U}_{[1,3]} \\
Q^{(2)} &= 10, & Q_l^{(2)} &\sim \mathcal{U}_{[5,15]} \\
R &= 0.1, & R_l &\sim \mathcal{U}_{[0.01,0.2]} \\
\boldsymbol{\phi}_{11} &= \boldsymbol{\phi}_{22} = 0.95, & \boldsymbol{\phi}_{11,l} &= \boldsymbol{\phi}_{22,l} \sim \mathcal{U}_{[0.9,0.99]}
\end{aligned}
$$

where the notations for model parameters are described in the Real- and discrete-valued state-space models section of Materials and methods.

We compared the same four algorithms: for static switching and IMM inference algorithms, we estimated the segmentation of sequences using the randomly initialized parameters, since parameter learning is not part of these algorithms; for the VI-A EM and VI-I EM learning algorithms, we ran both the fixed-point iterations during the E-step and generalized EM iterations until convergence (see the Fixed-point iterations section of Materials and methods and S3 Appendix). The same temperature decaying in the variational inference analysis was used for the VI-A EM learning at every E-step. Estimated switching state was determined with a decision threshold of 0.5 on the

posterior model probabilities.

Percentage correct segmentation histograms show degraded performance as expected across all algorithms compared to inference with true parameters (Fig 3a). Despite the use of incorrect parameters, static switching and IMM achieved reasonable segmentation accuracy, with mean accuracies of 0.750 and 0.809, respectively, which decreased by 6-7% compared to when the true parameters were used. Notably, VI-A EM was much less accurate, with a mean accuracy of 0.705. In contrast, VI-I EM maintained excellent segmentation accuracy, outperforming the other algorithms, with a mean of 0.849 that only decreased 4.1% compared to the results from using the true parameters.

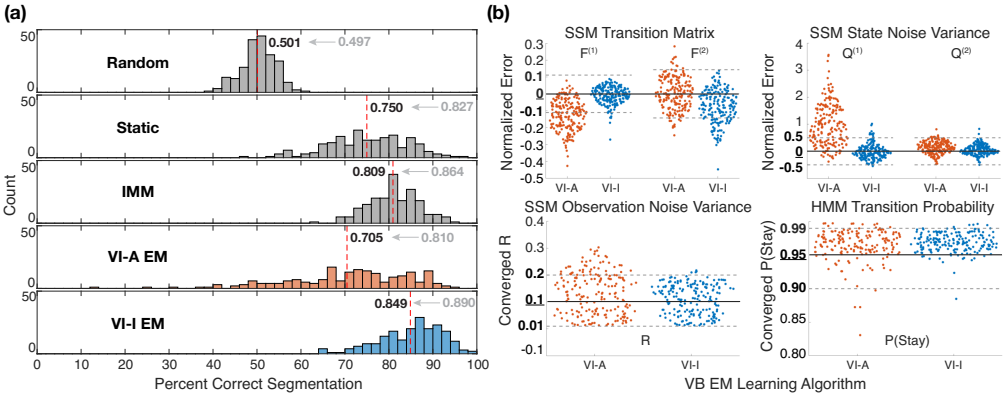

Fig 3. Simulation segmentation results with parameter learning. (a) Histograms of segmentation accuracy across 200 iterations while the true parameters are unknown and parameter learning is performed by the variational methods. The mean segmentation accuracy for each method is displayed and marked by the dashed red line, and it is compared to the mean accuracy previously obtained using true parameters shown in gray. Random = random segmentation with a Bernoulli process; Static = static switching method; IMM = interacting multiple models method; VI-A EM = variational EM learning with deterministic annealing (orange color); VI-I EM = variational EM learning with interpolated densities (blue color). (b) Swarm plots showing the distributions of model parameters learned by the variational learning algorithms. The values in the top row for transition matrix F and state noise variance Q are displayed on scales of normalized error (error = (learned - true) / true) relative to the true parameter values. The ranges used in the uniform distributions to sample initial model parameters are marked in bold fonts on the y-axes, as well as using solid black lines (true values) and dotted gray lines (upper and lower bounds of the ranges). VI-A/VI-I EM denotes annealed learning or learning with interpolated densities.

To characterize the robustness of variational learning and the ability to recover generative model parameters via EM, we analyzed the converged model parameters produced by the two variational learning algorithms relative to the true values (Fig 3b). Across model parameters, VI-A EM failed to identify the true values in most cases, suggesting the algorithm got trapped in local maxima of log-likelihood (see S1 Appendix

for an analysis of negative free energy), which explains the poor segmentation accuracy results in Fig 3a. VI-I EM estimated model parameters that have distributional modes at the true values, indicating successful parameter recovery. Both learning algorithms tend to overestimate the probability of HMM to stay in the same model, likely a bias due to finite sampling. Nevertheless, these results demonstrate that our variational learning method with interpolated densities is robust to uncertain model parameters.

Extensions of model structure and parameter estimation

The simulations studied so far employ observations that switch between two AR1 models. While the findings are useful as a proof of principle for variational Bayesian learning, they are not representative of neural signals in real applications that require switching inference, as such signals usually have more complex dynamics. In addition, a binary HMM switching between two parallel processes introduces large change-point deviations as can be seen in Fig 2a, which might be trivially detected by looking at the first derivative of the time series. To address these gaps, we conducted simulation analyses using a single bivariate AR1 model that switches between two state-transition matrices. Specifically, the generative model is as follows:

$$\mathbf{x}_t = \begin{bmatrix} 0.5 & \mathbf{F}_{12}^{(s_t)} \\ 0 & 0.5 \end{bmatrix} \mathbf{x}_{t-1} + \mathbf{w}_t, \qquad \mathbf{w}_t \sim \mathcal{N}\left(\mathbf{0}, \begin{bmatrix} 2 & 0 \\ 0 & 2 \end{bmatrix}\right)$$
$$\mathbf{y}_t = \begin{bmatrix} 1 & 0 \\ 0 & 1 \end{bmatrix} \mathbf{x}_t + \mathbf{v}_t, \qquad \mathbf{v}_t \sim \mathcal{N}\left(\mathbf{0}, \begin{bmatrix} 0.1 & 0 \\ 0 & 0.1 \end{bmatrix}\right)$$

where $\mathbf{F}_{12}^{(1)} = 0.5$ and $\mathbf{F}_{12}^{(2)} = 0$. The switching state s_t followed a binary HMM process as before with initial priors $\boldsymbol{\rho}_1 = \boldsymbol{\rho}_2 = 0.5$ and a state-transition probability matrix with $\boldsymbol{\phi}_{11} = \boldsymbol{\phi}_{22} = 0.95, \boldsymbol{\phi}_{12} = \boldsymbol{\phi}_{21} = 0.05$. Therefore, this generative model consists of two identical AR1 models where the second model has time-varying influence on the first. An example simulated time series $\mathbf{y}$ is shown in Fig 4 along with the resultant segmentation by the four inference algorithms using true parameters. We generated 200 sequences of 200 time points and analyzed the segmentation accuracy of inference algorithms given the true parameters. The same temperature parameters as before were used for variational inference with deterministic annealing. Both VI-A and VI-I ran

until convergence of the fixed-point iterations. The estimated switching state was determined with a decision threshold of 0.5 on posterior model probabilities.

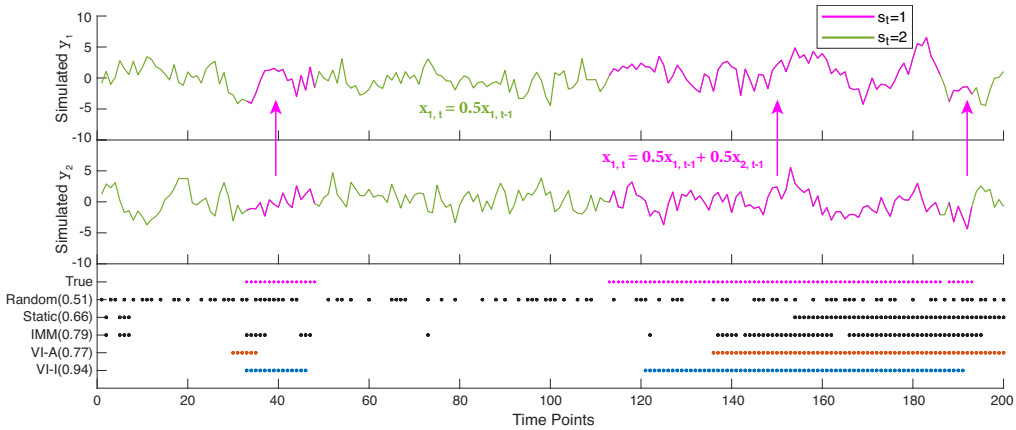

Fig 4. An example simulated sequence using a bivariate AR1 model. The top two panels show the two components, y_1 and y_2, of a simulated bivariate observed data $\mathbf{y}$. The second component of the underlying bivariate AR1 model has time-varying influence on the first model as represented by the upward arrows between the two panels. The time traces are also marked with different colors for the two states. The bottom panel shows the results of switching inference on this example simulated data given true parameters of the underlying generative model. Time points estimated to be in the first model ($s_t = 1$) are marked in colored dots for each inference method. Accuracy of each method in inferred switching across the 200 time points is displayed in parentheses. True = simulated switching states; Random = random segmentation with a Bernoulli process; Static = static switching method; IMM = interacting multiple models method; VI-A = variational inference with deterministic annealing (orange color); VI-I = variational inference with interpolated densities (blue color).

It is evident from both the generative model equations and the example time series that this is a much more difficult inference problem than previous studies using two AR1 models with uncoupled dynamics. Nevertheless, all inference algorithms provided informative estimates compared to random segmentation, with the variational inference algorithms obtaining better accuracy results (Fig 5a). VI-I produced segmentation with the best accuracy mean at 0.741, followed by VI-A at 0.719. Static switching and IMM had worse performance at 0.634 and 0.704 respectively. We note that the true generative model in this simulation is different from the assumed generative model employed in our VI-I algorithm. Nonetheless, we see that our algorithm still provides excellent switching inference. This feature is discussed in more detail below with parameter learning.

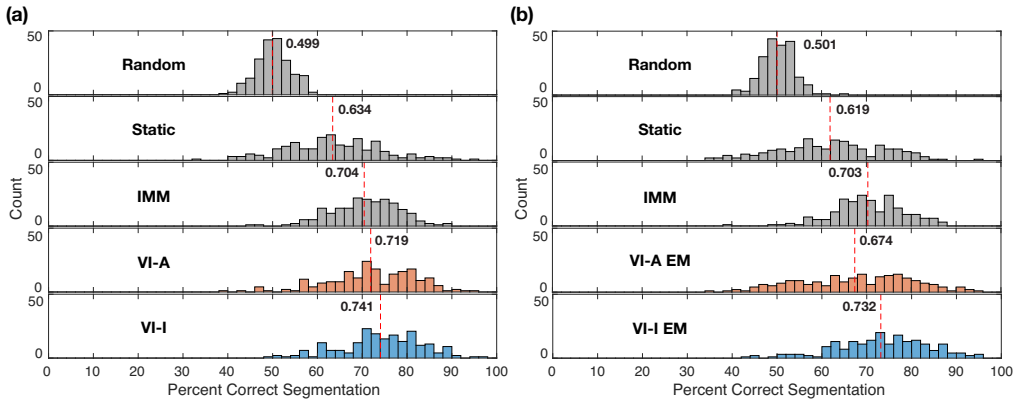

Fig 5. Segmentation results in the bivariate AR1 simulations. (a) Histograms of segmentation accuracy across 200 iterations given true parameters. (b) Histograms of segmentation accuracy across 200 iterations while the true parameters are unknown and parameter learning is performed by the variational methods. In both (a) and (b), the mean segmentation accuracy for each method is displayed and marked by the dashed red line. Random = random segmentation with a Bernoulli process; Static = static switching method; IMM = interacting multiple models method; VI-A = variational inference with deterministic annealing (orange color); VI-I = variational inference with interpolated densities (blue color). VI-A/VI-I EM denote the EM learning algorithms with the corresponding initialization approaches in variational inference during E-steps.

Next, we proceed to characterize the robustness of variational learning when the true parameters are unknown. We initialized all algorithms for the lth sequence with parameters drawn from uniform distributions centered around the true values:

$$\begin{aligned}
\mathbf{F}_{\{\backslash 21\}} &= 0.5, & \mathbf{F}_{11,l},\ \mathbf{F}_{22,l},\ \mathbf{F}^{(1)}_{12,l} &\sim \mathcal{U}_{[0.4,0.6]} \\
\mathbf{Q}_{11} = \mathbf{Q}_{22} &= 2, & \mathbf{Q}_{11,l},\ \mathbf{Q}_{22,l} &\sim \mathcal{U}_{[1,3]} \\
\mathbf{R}_{11} = \mathbf{R}_{22} &= 0.1, & \mathbf{R}_{11,l},\ \mathbf{R}_{22,l} &\sim \mathcal{U}_{[0.01,0.2]} \\
\phi_{11} = \phi_{22} &= 0.95, & \phi_{11,l} = \phi_{22,l} &\sim \mathcal{U}_{[0.9,0.99]}
\end{aligned}$$

Multivariate static switching and IMM were applied using the randomly initialized parameters. For VI-A EM and VI-I EM learning algorithms, we ran both the fixed-point iterations (E-step) and generalized EM iterations until convergence. Identical annealing and switching state decision thresholds were used as before.

With the M-step of variational learning in this analysis, we demonstrate an important extension of the variational Bayesian equations to support jointly estimated parameters across models. Specifically, the structured variational algorithms assume the

following generative model structure in this bivariate AR1 example:

$$
\begin{aligned}
\mathbf{x}_t^{(1)} &= \mathbf{F}^{(1)}\mathbf{x}_{t-1}^{(1)} + \mathbf{w}_t^{(1)}, & \mathbf{w}_t^{(1)} &\sim \mathcal{N}\left(\mathbf{0}, \mathbf{Q}^{(1)}\right) \\
\mathbf{x}_t^{(2)} &= \mathbf{F}^{(2)}\mathbf{x}_{t-1}^{(2)} + \mathbf{w}_t^{(2)}, & \mathbf{w}_t^{(2)} &\sim \mathcal{N}\left(\mathbf{0}, \mathbf{Q}^{(2)}\right) \\
\mathbf{y}_t &= \begin{bmatrix} 1 & 0 \\ 0 & 1 \end{bmatrix} \mathbf{x}_t^{(s_t)} + \mathbf{v}_t, & \mathbf{v}_t &\sim \mathcal{N}\left(\mathbf{0}, \mathbf{R}\right)
\end{aligned}
$$

where the two candidate models have distinct transition matrices $\mathbf{F}^{(1)}$ and $\mathbf{F}^{(2)}$ that could be updated separately during the M-step, likewise for $\mathbf{Q}^{(1)}$ and $\mathbf{Q}^{(2)}$. However, in real applications there are often prior knowledge on the relations between switching models. For instance, the true generative model here suggests that if two parallel models are used to approximate the switching dynamic, they should share all parameters except the $\mathbf{F}_{12}$ element of the state-transition matrix that gates the effect of the second model on the first. Simple manipulations of the update equations can exploit this shared structure to reduce the set size of parameters to be estimated and pool information across models during parameter learning. This joint parameter learning across models is described in detail in S2 Appendix.

The segmentation results show slightly degraded performance as expected compared to using true parameters, with the VI-I EM algorithm giving the best mean accuracy at 0.732 (Fig 5b). These results suggest that our method could be highly effective for analyzing neural signals that exhibit subtle switching dynamics. Furthermore, these simulations show that this switching state-space inference framework could be used to address time-varying Granger causality problems, particularly when the causal structure is changing rapidly [45–47]. The current example gives a statistical inference on the temporal forecasting of the first model by the second model at every time point without the need for log-likelihood ratio tests and windowing [48–51]. Our method also estimates parameters shared between the "full" and "reduced" models while incorporating observation noise [49, 52]. This application can be extended to higher-order models in a straightforward manner.

Real application: spindle detection

Sleep spindles are transient oscillatory bursts of neural activity observed in EEG recordings during non-rapid eye movement (NREM) sleep, with waxing and waning waveforms in the sigma frequency range (12 Hz–16 Hz) that last 0.5 s–3 s and that occur on a background of slow waves (0.5 Hz–2 Hz) [53]. In this section, we describe a novel spindle detection algorithm using our variational Bayesian method to illustrate how this approach can be easily applied in neural signal processing. As we will show, switching state-space models provide a rigorous and probabilistic detection tool for spindles.

The performance of parametric state-space methods, including all the algorithms studied here, is ultimately dependent on the ability of the chosen model class to represent the signals of interest. Oscillations are ubiquitous in neural signals, and therefore they need to be well modeled in order for likelihood profiles to reflect the presence of transient oscillations like spindles. Here, we employ a recently developed model that is uniquely suited for modeling oscillations in the state-space form [54]:

$$\begin{bmatrix} x_{t,1} \\ x_{t,2} \end{bmatrix} = a \begin{bmatrix} \cos\omega & -\sin\omega \\ \sin\omega & \cos\omega \end{bmatrix} \begin{bmatrix} x_{t-1,1} \\ x_{t-1,2} \end{bmatrix} + \begin{bmatrix} w_{t,1} \\ w_{t,2} \end{bmatrix}, \quad \begin{bmatrix} w_{t,1} \\ w_{t,2} \end{bmatrix} \sim \mathcal{N}\left(\mathbf{0}, \begin{bmatrix} \sigma^2 & 0 \\ 0 & \sigma^2 \end{bmatrix}\right)$$

$$y_t = \begin{bmatrix} 1 & 0 \end{bmatrix} \begin{bmatrix} x_{t,1} \\ x_{t,2} \end{bmatrix} + v_t, \quad v_t \sim \mathcal{N}(0, R)$$

This model can be viewed as a phasor rotating around the origin with frequency ω (in radians) in the real and imaginary plane whose projection onto the real line produces the observed oscillation. The Gaussian noise processes allow instantaneous fluctuations in oscillation amplitude and phase, also known as random frequency modulation [55]. We refer to this model as a neural oscillator hereafter.

To model slow oscillations (δ) and spindles (ς) during sleep, we can consider two independent neural oscillators within a set of two candidate models:

$$\mathbf{x}_t^{(1)} = \begin{bmatrix} a^\delta \mathcal{R}(\delta) & \mathbf{0} \\ \mathbf{0} & a^\varsigma \mathcal{R}(\varsigma) \end{bmatrix} \mathbf{x}_{t-1}^{(1)} + \mathbf{w}_t^{(1)}, \quad \mathbf{w}_t^{(1)} \sim \mathcal{N}\left(\mathbf{0}, \begin{bmatrix} (\sigma^2)^\delta \mathbf{I}_2 & 0 \\ 0 & (\sigma^2)^\varsigma \mathbf{I}_2 \end{bmatrix}\right)$$

$$\mathbf{x}_t^{(2)} = a^\delta \mathcal{R}(\delta)\, \mathbf{x}_{t-1}^{(2)} + \mathbf{w}_t^{(2)}, \qquad \mathbf{w}_t^{(2)} \sim \mathcal{N}\left(\mathbf{0}, (\sigma^2)^\delta \mathbf{I}_2\right)$$

where $\mathbf{x}_t^{(1)} = \left[x_{t,1}^{\delta^{(1)}}, x_{t,2}^{\delta^{(1)}}, x_{t,1}^{\varsigma^{(1)}}, x_{t,2}^{\varsigma^{(1)}}\right]^\top$ and $\mathbf{x}_t^{(2)} = \left[x_{t,1}^{\delta^{(2)}}, x_{t,2}^{\delta^{(2)}}\right]^\top$;

$$
\begin{aligned}
y_t &= \mathbf{G}^{(s_t)}\mathbf{x}_t^{(s_t)} + v_t, \qquad v_t \sim \mathcal{N}(0, R) \\
\mathbf{G}^{(1)} &= \begin{bmatrix} 1 & 0 & 1 & 0 \end{bmatrix}, \quad \mathbf{G}^{(2)} = \begin{bmatrix} 1 & 0 \end{bmatrix}
\end{aligned}
$$

where $\mathbf{I}_2$ is an identity matrix, and for $f \in \{\delta, \varsigma\}$, $\mathcal{R}(f) = \begin{bmatrix} \cos\omega^f & -\sin\omega^f \\ \sin\omega^f & \cos\omega^f \end{bmatrix}$. An HMM process determines the switching state s_t taking on values in $\{1, 2\}$ across time.

Here we again employ shared parameters between the two candidate models for the slow oscillation components. They capture the stationary dynamics of slow waves in the background, while allowing the models to represent transient sleep spindles by switching between the two "neural" states: one with both slow oscillations and spindles, and the other with only slow oscillations. In S2 Appendix, we describe how this model can be viewed as a close approximation to a range of other possible generative processes for spindles while conforming to the flexible variational framework presented here.

To begin spindle segmentation, we first initialized oscillator parameters as described in the Initialization of Gaussian SSM parameters section of Materials and methods. Briefly, the entire time series was modeled with a stationary state-space model including both slow oscillation and spindle oscillators, and parameters were learned through a standard EM algorithm. Given the generative model, we also derived M-step update equations for variational learning with jointly estimated parameters for the slow oscillator across models. In other words, the dynamics of the slow oscillations were modeled after pooling together segments regardless of the presence of sleep spindles (see S2 Appendix). We note that models with more hidden components will inherently be favored by log-likelihood measures during learning, owing to their higher numbers of degrees of freedom. To account for this, we matched the ensemble averages of model evidence from different Gaussian SSMs when initializing each E-step, described in detail in S3 Appendix. The HMM switching process was initialized with initial state priors $\boldsymbol{\rho}_1 = \boldsymbol{\rho}_2 = 0.5$ and a state-transition probability matrix with $\boldsymbol{\phi}_{11} = \boldsymbol{\phi}_{22} = 0.99$, $\boldsymbol{\phi}_{12} = \boldsymbol{\phi}_{21} = 0.01$, which were also updated during the M-steps.

We first compared variational learning methods with other inference algorithms on a

short segment of EEG data recorded during sleep. In addition to static switching and IMM, we also analyzed a special Gaussian merging algorithm derived for Gaussian SSMs where only the observation matrix is allowed to switch [34]. VI-A EM used the same temperature decay as before. The estimated switching state was determined with a decision threshold of 0.5 on posterior model probabilities. Fig 6 shows that the inference-only algorithms performed poorly even in this case with obvious strong spindle activity. Their posterior model probabilities were biased to select spindles due to the nested structure noted above. On the other hand, VI-A EM labelled spindles that appeared reasonable given the EEG waveform and spectrogram. In comparison, VI-I EM produced segmentation results that were even more accurate with tighter margins around time points when spindles were apparent on the time trace and spectrogram.

We then applied the best performing VI-I EM method to three randomly selected 30 s NREM2 sleep recordings, robustly extracting sleep spindles across all time points (Fig 7). These results demonstrate that switching oscillator models with variational learning could adjust to spindles present in different EEG recordings in an unsupervised manner. In each recording, the algorithm learned individual parameters for the oscillators to best capture the time-varying amplitudes, frequencies, and waveform shapes of the observed spindles. The posterior model probabilities of the HMM process account for temporal dynamics and provide a principled statistical criterion for detecting spindles, which is not possible with a simple fixed threshold on bandpass filtered data as with the de facto practice in sleep research.

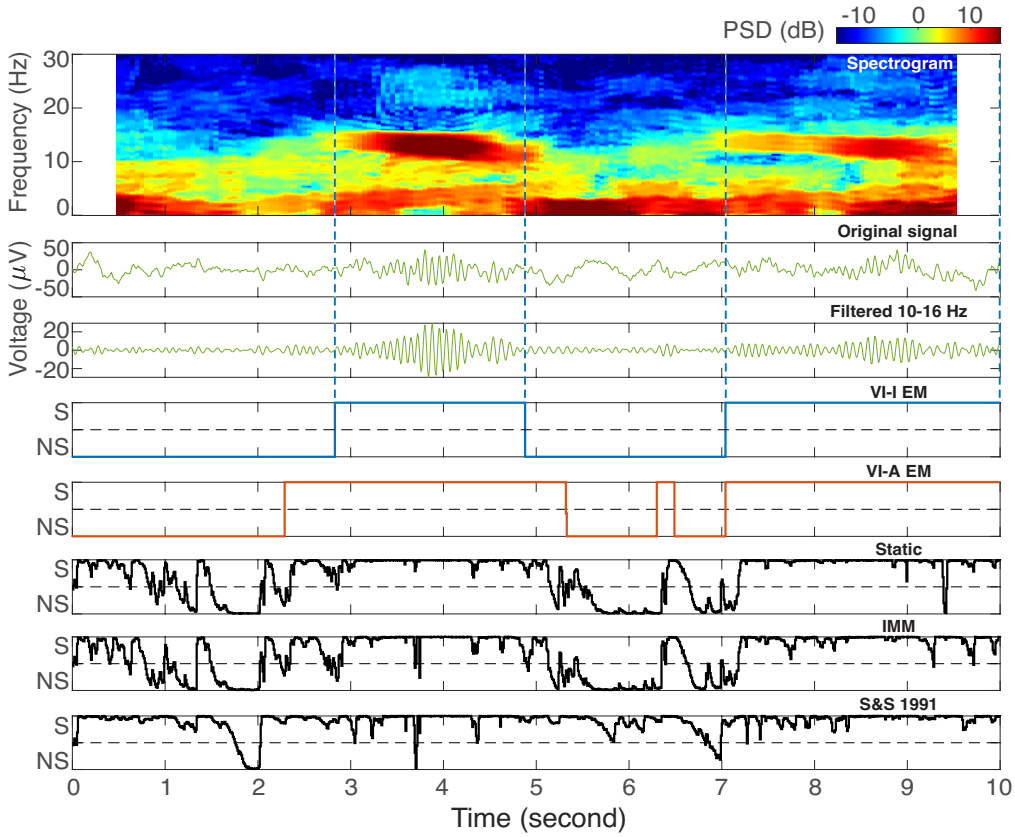

Fig 6. Comparison of switching inference algorithms applied to sleep spindle detection. In the top three panels, the spindle activity is visualized using a spectrogram, the original time trace, and after being bandpass filtered to 10 Hz–16 Hz. The bottom five panels show the posterior model probabilities of $s_t = 1$ as estimated by the five algorithms. A model probability closer to 1 suggests the presence of spindles (S = Spindle), while being closer to 0 indicates no spindles (NS = No Spindle). The middle value 0.5 model probabilities is marked with gray horizontal dashed lines. The margins of spindle events identified by the VI-I EM method are also marked with vertical dashed lines. VI-I EM = variational EM learning with interpolated densities (blue color); VI-A EM = variational EM learning with deterministic annealing (orange color); Static = static switching method; IMM = interacting multiple models method; S&S 1991 = the Gaussian merging method introduced by Shumway and Stoffer in 1991 [34].

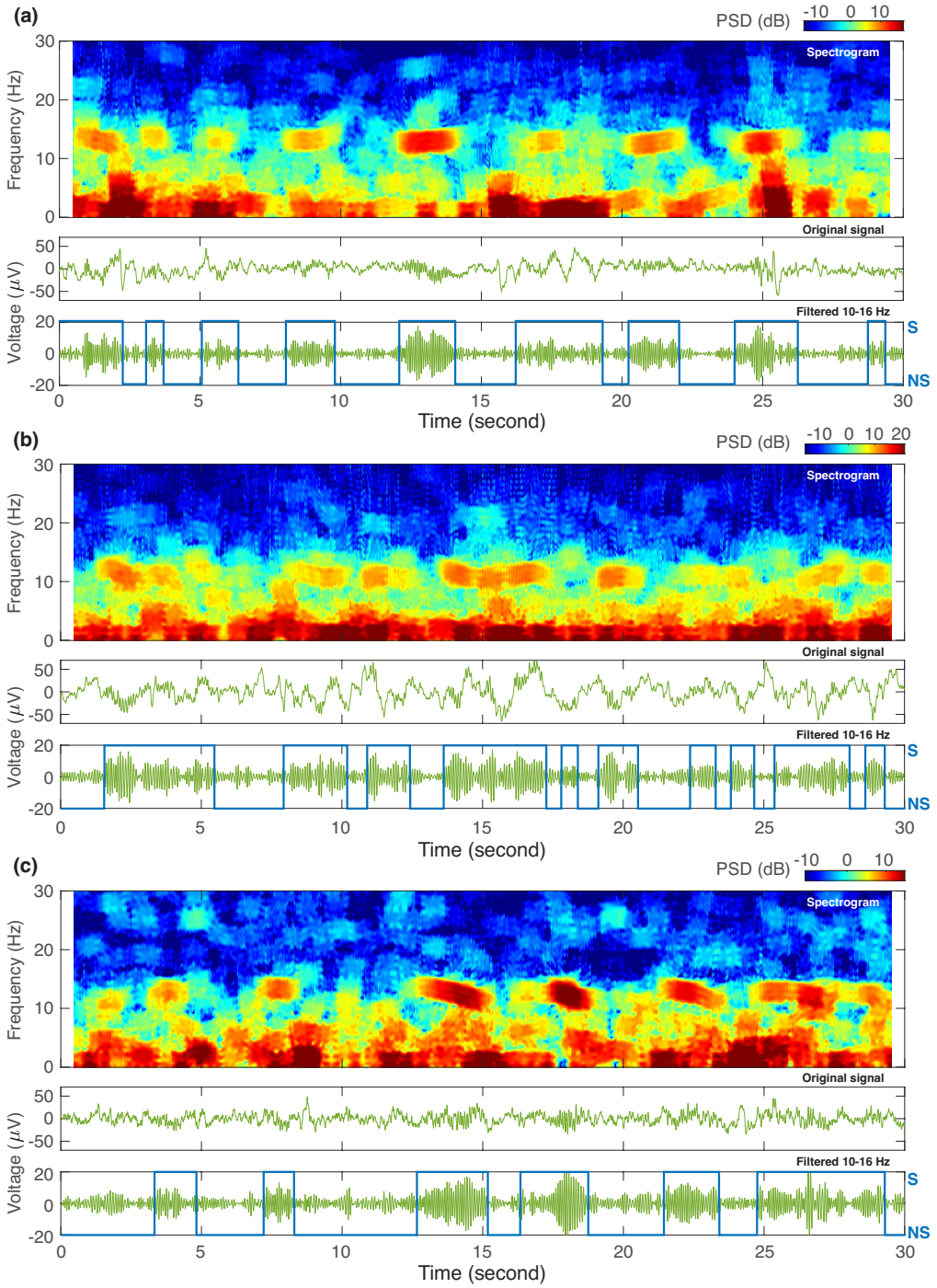

Fig 7. Automatic segmentation of sleep spindles using the VI-I EM method. Three 30 s EEG recordings of NREM2 sleep were segmented with the variational EM learning method with interpolated densities (VI-I EM) to identify spindles in an unsupervised manner. In each of the (a)-(c) recordings, the three sub-panels visualize spindle activity using a spectrogram, the original time trace, and after being bandpass filtered to the 10 Hz–16 Hz frequency range. The estimated posterior model probabilities for the switching model with both slow oscillations and spindles are plotted in blue lines and overlaid on the filtered signal time traces. S = Spindle; NS = No Spindle.

Discussion

In this paper we presented an algorithm for inference and learning with switching state-space models. This method holds promise in modeling time-varying dynamics of neural signals, in particular, neural time series data such as EEG. It takes a Variational Bayes approach to approximate the otherwise intractable posterior and enables state estimation and system identification via a generalized EM algorithm. We showed extensive simulation results on how the method can provide accurate segmentation of piece-wise linear dynamic regions, even when the true model parameters were unknown. We also extended the generative model structure to higher dimensions and to more subtle switching transitions instead of jumping between independent state-space models with distinct dynamics. Accordingly, we derived parameter learning rules that were modified to encode this structure and to provide more efficient parameter updates with joint estimation across switching models. Finally, we applied this learning algorithm to a real world neural signal processing problem of sleep spindle detection, providing excellent detection and extraction of spindles alongside a rigorous statistical characterization. Taken together, our results add to a growing literature showing how state-space models can provide powerful statistical inferences to study neural signals.

We were inspired by an earlier, influential paper by Ghahramani and Hinton that applied the variational approximation to switching state-space models [42], but we introduced several important innovations that significantly improved the performance of the variational EM algorithm for these models in practice. In addition, we described in detail a simpler derivation of variational algorithms for such models. Ghahramani and Hinton utilized the same basic form of generative models presented here, but postulated the functional forms of the marginal distributions by introducing additional parameters $\mathbf{g}_t$ and $\mathbf{h}_t$ and solved for their optimal values by minimizing the KL divergence between the exact and approximate Hamiltonian functions. In contrast, we derived the optimal functional forms of hidden state marginals to maximize the negative variational free energy, which is mathematically equivalent to minimizing the KL divergence. In this way, we obtained expressions for $\mathbf{g}_t$ and $\mathbf{h}_t$ as summary statistics of the hidden state marginals directly from the variational posterior (see the Variational approximation of hidden state posterior section of Materials and methods).

Given the non-convexity of the problem, robust initialization of the generalized EM iterations, in particular of the fixed-point iterations during the E-step, is crucial for achieving reliable segmentation and avoiding trivial local maxima in the negative free energy. Ghahramani and Hinton proposed a deterministic annealing approach [42], which can be viewed as a form of variational tempering [56]. As discussed in [42] and analyzed in this paper, the annealed learning does not improve performance over traditional inference-only algorithms. We proposed a novel initialization strategy for $\mathbf{g}_t$, based on the insight that interpolated densities provide a local statistical comparison between the candidate models, agnostic of switching dynamics. The interpolated densities therefore provide natural starting values for $\mathbf{g}_t$, which serves as the surrogate observation probabilities in the HMM switching process. Our results showed that this technique significantly improved the segmentation accuracy and system identification of our algorithm compared to the deterministic annealing approach. We found that this more accurate initialization was essential in more complicated scenarios, such as time-varying AR processes, or in practical neural signal processing applications, such as sleep spindle segmentation.

This algorithm provides a unique take on inference and learning for switching state-space models. Compared to traditional inference-only algorithms, also known as assumed density filtering (ADF) [57], the variational learning method allows iterative parameter tuning that improves segmentation. These learned parameters also allow us to characterize the properties of the underlying physical system, which may be important in scientific applications such as neural signal processing. Recent algorithms have explored smoothed inference by extending ADF algorithms [58, 59]. In contrast, our algorithm provides an elegant solution for smoothed inference using familiar message-passing algorithms such as the Kalman filter, RTS smoother, and forward-backward algorithm, which are applicable after the conditional dependencies between the real- and discrete-valued hidden states are ignored under the parallel model variational approximation. This approach is an instance of structured variational inference for time series data [44].

Other variational learning methods have been developed for switching linear dynamical systems [60–62] based on the same principle of approximating intractable posterior with factorized distributions. A notable difference is that these methods

assume a single multi-modal hidden state that is modulated by the switching state instead of the multiple parallel state-space models in our generative process. As we explored in the bi-variate AR1 simulation and spindle analyses, multiple parallel models can be an effective way to approximate multi-modality: the hidden states in parallel models are suppressed when they are not contributing to the observed data, since the Kalman filtering and smoothing within each model are weighted by the model responsibility $\mathbf{h}_t$. In addition, when multiple models contain hidden states reflected in the observed data, the smoothed estimates across parallel models are closely linked since they are all conditioned on the same observed data. A future study could compare these two approaches and characterize their computational costs and learning performance. Nevertheless, our initialization strategy using interpolated densities could still be helpful in these multi-modal variational learning algorithms. Given that the observed data have a sufficiently high sampling rate relative to the underlying state-transition dynamics, interpolated densities at each time point provide local comparisons among switching states to warm start the generalized EM iterations close to the desired optimal solution.

More recent algorithms for switching state-space models embrace a Bayesian approach by using sampling techniques to obtain posterior distributions. Some of these methods can simultaneously learn the number of switching states [39] and more complicated recurrent structures [41]. Recurrent neural networks can also be adapted to support Kalman updates in a deep state-space model and to characterize switching dynamics after training [63]. These methods have varying computational cost and complexity, which require careful adaptation for neural signal processing or biomedical applications. At least two studies have applied variational inference on more elaborate model structures and showed meaningful segmentation with neural signals [64, 65].

In comparison to the above algorithms, our method utilizes existing interpretable linear Gaussian SSMs that can sufficiently capture the distinct dynamics observed in neural signals. By applying an intuitive variational approximation on several candidate models constructed from clinical and neuroscience domain knowledge, the variational learning method we describe here provides a general solution for segmenting a given time series data set into neural dynamic states of interest. Many of the methodological considerations, including the bias of log-likelihoods in nested structures, are relevant to other methods. In addition, our work presents an accessible starting point for

researchers interested in using switching state-space models to analyze neural data. Given the straightforward applicability, the proposed variational learning method, combined with an appropriate SSM class (AR, oscillator, GLM, etc.), could be a highly effective approach for model building, and could be an important first step before considering more complex modeling approaches.

Sleep spindles analyzed here serve as a good example of scenarios where switching state-space models can be directly applied to achieve much more powerful analyses than standard methods employed in the field. Spindles have been studied with visual scoring by trained human experts for decades [66], until recent efforts to develop reliable detection algorithms [67] in light of their integral roles in normal sleep physiology, memory consolidation, and psychiatric and neurodegenerative diseases [68]. While different in the exact implementation, almost all spindle detection algorithms are fundamentally based on setting an arbitrary threshold and picking strong transient signals in predefined frequency ranges [69], which is severely biased as shown in a recent study [70]. With strong prior knowledge of sleep oscillations, reasonable state-space models can be constructed. It should be emphasized that the exact parameters of these models do not need to be specified since they vary across individuals and different stages of sleep. But one can decide on the number of switching models and their compositions given domain knowledge of sleep and the target spindle detection problem. In this study, we show that the variational learning method can robustly extract sleep spindles from NREM2 sleep in an unsupervised manner, which obviates the need for thresholding. At the same time, variational learning can better characterize spindle properties such as frequency and amplitude by focusing on periods when they are statistically detectable.

Similar applications can be widely found across neuroscience: burst-suppression induced by anesthetic drugs , epileptic bursts, event-related potentials during cognitive tasks, spike train recordings, or simply behavioral responses over a block of trials [1]. Switching state-space models provide a statistical framework to investigate temporal variations and extract distinct states that are ubiquitous in different datasets. Thus, we advocate for a broad adoption of switching methods in place of previous windowing techniques that limit the characterization of neural signals.

Conclusion

In this paper, we explored the use of switching state-space models for neural signal processing. We demonstrated the promising performance of a variational learning algorithm with interpolated densities, both in simulations and when applied to spindle detection in real sleep EEG data. Our method can be widely applied to neuroscience problems when the observed dynamics show transitions between periods that can be modeled by linear Gaussian state-space models.

Materials and methods

Definitions

We denote a sequence of values or vectors defined for $t = (0), 1, \cdots, T$ as $\{\bullet_t\}$, with $\{\bullet_t\}_a^b$ indicating $t = a, \cdots, b$. We denote the matrix trace operator by $\mathrm{Tr}\{\bullet\}$. Finally, by $\mathbf{z}_t \sim \mathcal{N}(\boldsymbol{\mu}, \boldsymbol{\Sigma})$, we mean the Gaussian distribution:

$$p(z_t) = |2\pi\boldsymbol{\Sigma}|^{-1/2} \exp\left\{-\frac{1}{2}(\mathbf{z}_t - \boldsymbol{\mu})^\top \boldsymbol{\Sigma}^{-1}(\mathbf{z}_t - \boldsymbol{\mu})\right\} \tag{1}$$

Real- and discrete-valued state-space models

A state-space model (SSM) defines a probability density of real-valued time series data, $\{\mathbf{y}_t\}$, by relating them to a sequence of hidden state vectors, $\{\mathbf{x}_t\}$, which follow the Markov independence property so that the joint probability for the state sequence and observations can be factored as:

$$p(\{\mathbf{y}_t, \mathbf{x}_t\}) = p(\mathbf{x}_0) \prod_{t=1}^{T} p(\mathbf{x}_t|\mathbf{x}_{t-1}) p(\mathbf{y}_t|\mathbf{x}_t) \tag{2}$$

In its simplest form, the transition and output processes are linear and time invariant, incorporating multivariate Gaussian uncertainties [71]:

$$\mathbf{x}_t = \mathbf{F}\mathbf{x}_{t-1} + \mathbf{w}_t, \quad \mathbf{w}_t \sim \mathcal{N}(\mathbf{0}, \mathbf{Q}) \tag{3}$$

$$\mathbf{y}_t = \mathbf{G}\mathbf{x}_t + \mathbf{v}_t, \quad \mathbf{v}_t \sim \mathcal{N}(\mathbf{0}, \mathbf{R}) \tag{4}$$

where $\mathbf{F}, \mathbf{G}$ are called state-transition and observation matrices. Provided $p(\mathbf{x}_0)$ is Gaussian, this set of equations defines a joint Gaussian density on $\{\mathbf{y}_t, \mathbf{x}_t\}$ — we use the term Gaussian SSM to denote a model of this form.

A closely related type of state-space models has hidden states, $\{s_t\}$, which are discrete-valued, i.e. a multinomial variable that can take one of K values. Using the Markov independence property, the joint probability for the discrete-valued state sequence and observations can be again factored as in Eq 2, with s_t taking place of $\mathbf{x}_t$:

$$p(\{\mathbf{y}_t, s_t\}) = p(s_0) \prod_{t=1}^{T} p(s_t|s_{t-1}) p(\mathbf{y}_t|s_t) \tag{5}$$

The state-transition probabilities, $p(s_t|s_{t-1})$, are specified by a $K \times K$ state-transition matrix, $\boldsymbol{\phi}$. If the observed data are also discrete symbols taking one of L values, the observation probabilities can be fully specified by a $K \times L$ observation matrix, $\boldsymbol{\psi}$. This type of models is known as hidden Markov models (HMM) [72–74].

Next, we outline the various existing exact inference and learning algorithms associated with Gaussian SSM and HMM, in order to define the terminologies used throughout this paper. These algorithms will serve as the building blocks for inference and learning computations of switching state-space models described later.

State estimation

Given the observations and model parameters, inferring the hidden states of SSM has well-established solutions in the literature for linear Gaussian SSM with parameters $\{\mathbf{F}, \mathbf{Q}, \mathbf{G}, \mathbf{R}\}$ and for HMM with parameters $\{\boldsymbol{\phi}, \boldsymbol{\psi}\}$.

For Gaussian SSM, the joint distribution of the observations and hidden states given in Eq 2 is Gaussian, so inference on the hidden states also induces Gaussian posteriors. Various different application scenarios call for three kinds of inference problems: filtering, smoothing, and prediction [75]. *Filtering* deals with computing the posterior distribution $p\left(\mathbf{x}_t | \{\mathbf{y}_t\}_1^t\right)$ of the current hidden state, $\mathbf{x}_t$, conditioned on the observations up to time t. The recursive algorithm that carries out the computation is known as Kalman-Bucy filter [31]. The *smoothing* problem addresses finding the posterior probabilities $p\left(\mathbf{x}_t | \{\mathbf{y}_t\}_1^T\right)$ of the hidden states $\mathbf{x}_t$ given also future observations, i.e. up to time $T > t$. A similar recursive algorithm running backward from T to t implements the computation [76]. This backward recursion, combined with the Kalman filter running forward recursions from time 1 to t, is called Rauch-Tung-Striebel (RTS) smoother [77]. Finally, *prediction* computes the posterior predictive distribution $p\left(\mathbf{x}_{t+\tau} | \{\mathbf{y}_t\}_1^t\right)$ of the future hidden states, $\mathbf{x}_{t+\tau}$, conditioned on observations up to time t, as well as $p\left(\mathbf{y}_{t+\tau} | \{\mathbf{y}_t\}_1^t\right)$ given the observation matrix that relates future hidden states to observations.

For HMM, there are two similar inference problems of interest [72]. First, the recursive forward-backward algorithm computes the posterior probabilities of the discrete hidden states given observations from time 1 to T. As the name suggests, the forward pass computation steps are analogous to the Kalman filter, while the backward

pass steps are analogous to the RTS smoother. The second form of inference deals with decoding the most likely sequence of hidden states that could generate the observations. A well-known solution is given by the Viterbi algorithm that relies on similar forward and backward passes through all time points [78].

System identification

The problem of finding the model parameters $\{\mathbf{F}, \mathbf{Q}, \mathbf{G}, \mathbf{R}\}$ and $\{\boldsymbol{\phi}, \boldsymbol{\psi}\}$ is known as system identification in the engineering literature. In the most general form, these problems assume that only the observed data sequence is accessible. Given the probabilistic nature of the models, one can choose to either seek a single locally optimal point estimate of the parameters (Maximum likelihood (ML) or Maximum a posteriori (MAP) learning) or follow a Bayesian approach to compute or approximate posterior distributions of the model parameters given the data. In the system identification context, estimates from the former category (i.e. ML or MAP learning) are more popular and make use of the EM algorithm [79]. The EM algorithm alternates between optimizing the posterior distribution of the hidden states given current parameter estimates (the E-step) and updating the parameter estimates from the optimized posterior distribution of the hidden states (the M-step). This general procedure is guaranteed to increase the log-likelihood of the observed data sequence w.r.t. the model parameters [79].

For Gaussian SSM, the E-step is realized by the RTS smoother, and the M-step takes the form of a linear regression problem [71]. For M-steps with ML estimates, the linear regression problem remains unconstrained. On the other hand, for M-steps with MAP estimates, priors on the model parameters put constraints on the log-likelihood. Update equations can be derived in closed-form after taking derivatives with respect to each of the model parameters [71].

In the case of HMM parameters, the E-step utilizes the forward-backward algorithm to infer the posterior probabilities of the hidden states [72]. The M-step uses the expected counts of the discrete-valued state transitions and observations to update the state-transition and observation matrices with ML or MAP estimates. This procedure, also known as the Baum-Welch algorithm [80], predates the EM algorithm above.

Switching state-space models

We employ one particular form of switching state-space models that allows time-varying dynamics among arbitrary real-valued state-space models with stationary parameters [42]. In addition to its more general formulation compared to modeling non-stationary parameters within a single model, this construction offers an elegant solution under the variational Bayesian framework [43] as detailed later. The generative model consists of M linear Gaussian SSMs indexed by numbers from 1 to M which each contain continuous real-valued states, and one HMM whose states take on discrete integer values from 1 to M. Furthermore, the states within each of the Gaussian SSMs are assumed to evolve independently from other models. The discrete HMM too is independent of the Gaussian SSM and decides which one of the M state-space models is generating the current observation data point. The directed acyclic graph corresponding to this conditional independence relation is shown in Fig 8.

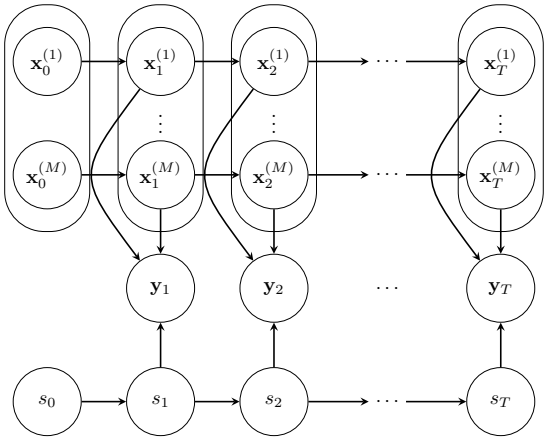

Fig 8. Generative structure with parallel switching state-space models. A directed acyclic graph is shown to represent the conditional independence structure between the M real-valued Gaussian hidden state sequences $\left\{\mathbf{x}_t^{(m)}\right\}$ for $m \in \{1, \cdots M\}$, a discrete-valued hidden Markov chain $\{s_t\}$, and the observed data $\{\mathbf{y}_t\}$ up to time T. In this generative structure, the observation at a given time point depends only on the hidden states of the M Gaussian models at that point, with the discrete-valued state selecting one of the models to produce the observation, hence the name *switching*.

The real-valued hidden states in the M Gaussian SSMs are labelled as $\left\{\mathbf{x}_t^{(m)}\right\}$ with $m \in \{1, \cdots, M\}$, the discrete-valued hidden states of HMM as $\{s_t\}$ where $s_t \in \{1, \cdots, M\}$, and the real-valued observations as $\{\mathbf{y}_t\}$. The joint probability for the

observations and hidden states therefore factors nicely as:

$$
\begin{aligned}
p\left(\left\{\mathbf{y}_t, \mathbf{x}_t^{(1)}, \cdots, \mathbf{x}_t^{(M)}, s_t\right\}\right) = & \prod_{t=1}^{T} p\left(\mathbf{y}_t | \mathbf{x}_t^{(1)}, \cdots, \mathbf{x}_t^{(M)}, s_t\right) \\
& \times \prod_{m=1}^{M} \left(p\left(\mathbf{x}_0^{(m)}\right) \prod_{t=1}^{T} p\left(\mathbf{x}_t^{(m)} | \mathbf{x}_{t-1}^{(m)}\right) \right) \\
& \times p(s_0) \prod_{t=1}^{T} p(s_t | s_{t-1}) \qquad (6)
\end{aligned}
$$

where all three parts have the familiar forms from classical Gaussian SSM and HMM literature. We provide each of these expressions below.

First of all, conditioned on the discrete hidden state, $s_t = m$, the observation is simply a multivariate Gaussian variable from the observation equation of the mth Gaussian SSM. The probability distribution of the observation vector is given by:

$$
\begin{aligned}
& p\left(\mathbf{y}_t | \mathbf{x}_t^{(1)}, \cdots, \mathbf{x}_t^{(M)}, s_t = m\right) = \\
& \qquad |2\pi\mathbf{R}|^{-1/2} \exp\left\{ -\frac{1}{2} \left(\mathbf{y}_t - \mathbf{G}^{(m)}\mathbf{x}_t^{(m)}\right)^\top \mathbf{R}^{-1} \left(\mathbf{y}_t - \mathbf{G}^{(m)}\mathbf{x}_t^{(m)}\right) \right\} \qquad (7)
\end{aligned}
$$

where $\mathbf{R}$ is the observation noise covariance matrix, and $\mathbf{G}^{(m)}$ is the observation matrix of the linear Gaussian SSMs indexed by m.

Secondly, the real-valued states of the M Gaussian SSMs evolve independently and in parallel, with dynamics specified by the model-specific state-transition matrix, $\mathbf{F}^{(m)}$, and state noise covariance, $\mathbf{Q}^{(m)}$, starting from different initial states, $\mathcal{N}\left(\boldsymbol{\mu}^{(m)}, \mathbf{Q}_0^{(m)}\right)$:

$$
\begin{aligned}
& p\left(\mathbf{x}_0^{(m)}\right) \prod_{t=1}^{T} p\left(\mathbf{x}_t^{(m)} | \mathbf{x}_{t-1}^{(m)}\right) = \\
& \quad \left|2\pi\mathbf{Q}_0^{(m)}\right|^{-1/2} \exp\left\{ -\frac{1}{2} \left(\mathbf{x}_0^{(m)} - \boldsymbol{\mu}^{(m)}\right)^\top \mathbf{Q}_0^{(m)^{-1}} \left(\mathbf{x}_0^{(m)} - \boldsymbol{\mu}^{(m)}\right) \right\} \times \\
& \prod_{t=1}^{T} \left|2\pi\mathbf{Q}^{(m)}\right|^{-1/2} \exp\left\{ -\frac{1}{2} \left(\mathbf{x}_t^{(m)} - \mathbf{F}^{(m)}\mathbf{x}_{t-1}^{(m)}\right)^\top \mathbf{Q}^{(m)^{-1}} \left(\mathbf{x}_t^{(m)} - \mathbf{F}^{(m)}\mathbf{x}_{t-1}^{(m)}\right) \right\} \qquad (8)
\end{aligned}
$$

Lastly, the discrete-valued switching state evolves according to the HMM specified by the $M \times M$ state-transition matrix $\boldsymbol{\phi}$ and initial state probabilities $\boldsymbol{\rho}$, independent

of the other M Gaussian SSMs with real-valued states:

$$p(s_0)\prod_{t=1}^{T} p(s_t|s_{t-1}) = \prod_{m=1}^{M} \boldsymbol{\rho}_m^{\mathbb{1}[s_0=m]} \prod_{t=1}^{T}\prod_{m,n=1}^{M} \boldsymbol{\phi}_{m,n}^{\mathbb{1}[s_t=m,s_{t-1}=n]} \tag{9}$$

Intractable posterior of hidden states

With the generative model defined, state estimation and system identification problems need to be solved. As reviewed above, both problems are encompassed in the EM algorithm, which alternates between 1) finding the posterior distribution of the hidden states $\left\{\mathbf{x}_t^{(1)}, \cdots, \mathbf{x}_t^{(M)}, s_t\right\}$ given the current values of model parameters, and 2) optimizing the model parameters given expectations of hidden states under the posterior distribution from 1). However, the hidden state posterior here cannot be computed explicitly. To illustrate this difficulty, we start with the complete log-likelihood of observations and hidden states:

$$\begin{aligned}
&\log p\left(\left\{\mathbf{y}_t, \mathbf{x}_t^{(1)}, \cdots, \mathbf{x}_t^{(M)}, s_t\right\}|\boldsymbol{\theta}\right) \\
&= -\frac{T}{2}\log|2\pi\mathbf{R}| - \frac{1}{2}\sum_{t=1}^{T}\sum_{m=1}^{M}\mathbb{1}[s_t=m]\left(\mathbf{y}_t - \mathbf{G}^{(m)}\mathbf{x}_t^{(m)}\right)^\top \mathbf{R}^{-1}\left(\mathbf{y}_t - \mathbf{G}^{(m)}\mathbf{x}_t^{(m)}\right) \\
&\quad - \frac{1}{2}\sum_{m=1}^{M}\log\left|2\pi\mathbf{Q}_0^{(m)}\right| - \frac{1}{2}\sum_{m=1}^{M}\left(\mathbf{x}_0^{(m)} - \boldsymbol{\mu}^{(m)}\right)^\top \mathbf{Q}_0^{(m)^{-1}}\left(\mathbf{x}_0^{(m)} - \boldsymbol{\mu}^{(m)}\right) \\
&\quad - \frac{T}{2}\sum_{m=1}^{M}\log\left|2\pi\mathbf{Q}^{(m)}\right| - \frac{1}{2}\sum_{m=1}^{M}\sum_{t=1}^{T}\left(\mathbf{x}_t^{(m)} - \mathbf{F}^{(m)}\mathbf{x}_{t-1}^{(m)}\right)^\top \mathbf{Q}^{(m)^{-1}}\left(\mathbf{x}_t^{(m)} - \mathbf{F}^{(m)}\mathbf{x}_{t-1}^{(m)}\right) \\
&\quad + \sum_{m=1}^{M}\mathbb{1}[s_0=m]\log\boldsymbol{\rho}_m + \sum_{t=1}^{T}\sum_{m,n=1}^{M}\mathbb{1}\left[s_t=m, s_{t-1}=n\right]\log\boldsymbol{\phi}_{m,n}
\end{aligned} \tag{10}$$

where $\boldsymbol{\theta} \triangleq \left\{\left\{\boldsymbol{\mu}^{(m)}, \mathbf{Q}_0^{(m)}, \mathbf{F}^{(m)}, \mathbf{Q}^{(m)}, \mathbf{G}^{(m)}\right\}, \boldsymbol{\rho}, \boldsymbol{\phi}, \mathbf{R}\right\}$, for $m = 1, \cdots, M$, is the set of parameters of the distributions that fully characterize the switching state-space generative model in Fig 8. Note that the HMM process does not have a separate observation probability parameter (e.g. $\boldsymbol{\psi}$). Once the switching state is fixed to $s_t = m$, the observation equation dynamic of the corresponding mth Gaussian SSM in the second term of Eq 10 specifies the likelihood of generating the observation at that time point.

State estimation, i.e., the E-step, is computationally difficult because of the products between the discrete switching states of the HMM and the real-valued states of the Gaussian SSMs. This conditional dependence between the hidden states (the 'two'

causes) when conditioning on the observations (the 'common' effect) has been described in the causal inference literature [81, pp. 40-45]. Graphically, conditioning on the children of v-structures results in a graph with parents connected with undirected edges for the new conditional (in)dependence relation (Fig 9a). The new edges introduced make it challenging to express the exact hidden state posterior in a factorized form. In particular, the individual Markov independence property within each Gaussian SSM is no longer present, since conditioning on $\mathbf{x}_{t-1}^{(m)}|\{\mathbf{y}_t\}$ alone does not make $\mathbf{x}_t^{(m)}|\{\mathbf{y}_t\}$ conditionally independent from the history $\mathbf{x}_{0,\cdots,t-2}^{(m)}|\{\mathbf{y}_t\}$ due to the new viable paths through the other Gaussian SSMs. Then exact inferences can only be solved after considering the combinations of states across all Gaussian SSMs and HMM. For example, the optimal filtering problem alone requires a bank of elemental estimators with the size of the bank increasing exponentially with time [32], so naturally the smoothing problem, i.e., state estimation of $p\left(\left\{\mathbf{x}_t^{(1)}, \cdots, \mathbf{x}_t^{(M)}, s_t\right\} \mid \{\mathbf{y}_t\}\right)$, becomes intractable. Without the hidden state posterior distribution estimated, system identification, i.e., parameter learning, cannot be performed either under the classical EM algorithm [71].

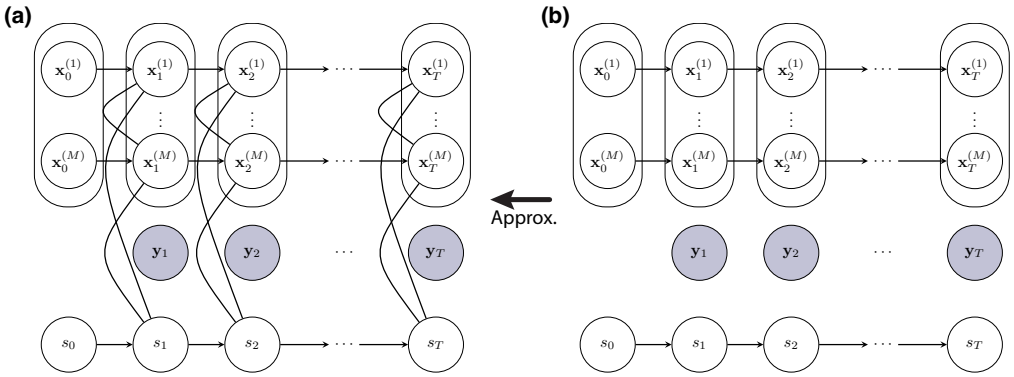

Fig 9. Posteriors of switching state-space models. (a) True posterior distribution. This is the resultant graph encoding the conditional independence relation after conditioning on the observed data $\{\mathbf{y}_t\}$ up to time T. The new edges between the hidden states make exact inference intractable. (b) Approximate posterior distribution. Compared to the true posterior, a structured approximation decouples the hidden state-space models from each other, making exact inference possible. The marginal distributions of the Gaussian hidden states $\{\mathbf{x}_t\}$ and the discrete-valued switching state $\{s_t\}$ are now inter-dependent through variational summary statistics $g_t^{(m)}$ and $h_t^{(m)}$.

Variational approximation of hidden state posterior

One possible solution is to use the Variational Bayes technique to approximate the true posterior of the hidden states, $p\left(\left\{\mathbf{x}_t^{(1)}, \cdots, \mathbf{x}_t^{(M)}, s_t\right\} \mid \{\mathbf{y}_t\}\right)$ [42]. The idea is to work within a subspace of tractable posterior probability distributions defined over the hidden states, and choose the optimal approximation, $q\left(\left\{\mathbf{x}_t^{(1)}, \cdots, \mathbf{x}_t^{(M)}, s_t\right\}\right)$, based on a lower bound on the marginal log-likelihood of observations:

$$\begin{aligned}
\log p\left(\{\mathbf{y}_t\}|\boldsymbol{\theta}\right) &= \log \sum_{\{s_t\}} \int d\{\mathbf{x}_t\} p\left(\left\{\mathbf{y}_t, \mathbf{x}_t^{(1)}, \cdots, \mathbf{x}_t^{(M)}, s_t\right\}|\boldsymbol{\theta}\right) \\
&= \log \sum_{\{s_t\}} \int d\left\{\mathbf{x}_t^{(1)}, \cdots, \mathbf{x}_t^{(M)}\right\} q\left(\left\{\mathbf{x}_t^{(1)}, \cdots, \mathbf{x}_t^{(M)}, s_t\right\}\right) \times \\
&\qquad \frac{p\left(\left\{\mathbf{y}_t, \mathbf{x}_t^{(1)}, \cdots, \mathbf{x}_t^{(M)}, s_t\right\}|\boldsymbol{\theta}\right)}{q\left(\left\{\mathbf{x}_t^{(1)}, \cdots, \mathbf{x}_t^{(M)}, s_t\right\}\right)} \\
&\geq \sum_{\{s_t\}} \int d\left\{\mathbf{x}_t^{(1)}, \cdots, \mathbf{x}_t^{(M)}\right\} q\left(\left\{\mathbf{x}_t^{(1)}, \cdots, \mathbf{x}_t^{(M)}, s_t\right\}\right) \times \\
&\qquad \log \frac{p\left(\left\{\mathbf{y}_t, \mathbf{x}_t^{(1)}, \cdots, \mathbf{x}_t^{(M)}, s_t\right\}|\boldsymbol{\theta}\right)}{q\left(\left\{\mathbf{x}_t^{(1)}, \cdots, \mathbf{x}_t^{(M)}, s_t\right\}\right)} \\
&= \mathbb{E}_q\left[\log \frac{p\left(\left\{\mathbf{y}_t, \mathbf{x}_t^{(1)}, \cdots, \mathbf{x}_t^{(M)}, s_t\right\}|\boldsymbol{\theta}\right)}{q\left(\left\{\mathbf{x}_t^{(1)}, \cdots, \mathbf{x}_t^{(M)}, s_t\right\}\right)}\right] \triangleq \mathcal{F}(q, \boldsymbol{\theta})
\end{aligned} \tag{11}$$

known as the *negative variational free energy* [43, 82, 83]. Since the distribution q is approximating the true posterior, the conditioning on $\{\mathbf{y}_t\}$ in the expression $q\left(\left\{\mathbf{x}_t^{(1)}, \cdots, \mathbf{x}_t^{(M)}, s_t \mid \{\mathbf{y}_t\}\right\}\right)$ is already implied, therefore omitted in all q notations.

The choice of $q\left(\left\{\mathbf{x}_t^{(1)}, \cdots, \mathbf{x}_t^{(M)}, s_t\right\}\right) = p\left(\left\{\mathbf{x}_t^{(1)}, \cdots, \mathbf{x}_t^{(M)}, s_t\right\} \mid \{\mathbf{y}_t\}\right)$ maximizes the negative free energy so that it reaches the true log-likelihood. However, since exact E-step is intractable due to the structure of the posterior distribution, we consider the following family of distributions that factor over the HMM and Gaussian SSMs, i.e.,

$$\mathcal{P} = \left\{q\left(\left\{\mathbf{x}_t^{(1)}, \cdots, \mathbf{x}_t^{(M)}, s_t\right\}\right) \;\middle|\; q\left(\bullet\right) = q\left(\{s_t\}\right) q\left(\left\{\mathbf{x}_t^{(1)}, \cdots, \mathbf{x}_t^{(M)}\right\}\right)\right\} \tag{12}$$

In other words, we get rid of the dependence between the switching state and real-valued states by limiting to distributions within this functional subspace. The graphical model corresponding to this conditional independence relation is shown in Fig 9b. It only

remains to find the optimal approximate posterior $q\left(\left\{\mathbf{x}_t^{(1)}, \cdots, \mathbf{x}_t^{(M)}, s_t\right\}\right)$ that is the *closest* to the true posterior $p\left(\left\{\mathbf{x}_t^{(1)}, \cdots, \mathbf{x}_t^{(M)}, s_t\right\} \mid \{\mathbf{y}_t\}\right)$. Since negative free energy is a lower bound on the marginal log-likelihood, we use the negative free energy as a measure of one-sided *closeness* to choose the optimal approximation as following:

$$q_{\boldsymbol{\theta}} = \arg\max_{q \in \mathcal{P}} \mathcal{F}(q, \boldsymbol{\theta}) \tag{13}$$

We proceed to a direct derivation of the optimal functional forms of the approximate posterior. Within the functional subspace $\mathcal{P}$, the negative free energy can be simplified:

$$\begin{aligned}\mathcal{F}(q, \boldsymbol{\theta}) = &\left\langle \left\langle \log p\left(\left\{\mathbf{y}_t, \mathbf{x}_t^{(1)}, \cdots, \mathbf{x}_t^{(M)}, s_t\right\} | \boldsymbol{\theta}\right)\right\rangle_s \right\rangle_x \\ &- \langle \log q\left(\{s_t\}\right)\rangle_s - \left\langle \log q\left(\left\{\mathbf{x}_t^{(1)}, \cdots, \mathbf{x}_t^{(M)}\right\}\right)\right\rangle_x \end{aligned} \tag{14}$$

where

$$\begin{aligned}\langle f \rangle_s &\triangleq \sum_{\{s_t\}} q\left(\{s_t\}\right) f \\ \langle f \rangle_x &\triangleq \int d\left\{\mathbf{x}_t^{(1)}, \cdots, \mathbf{x}_t^{(M)}\right\} q\left(\left\{\mathbf{x}_t^{(1)}, \cdots, \mathbf{x}_t^{(M)}\right\}\right) f\end{aligned}$$

Following the development in [43], the optimal functional forms for the variational log-posteriors to maximize Eq 14 are given as:

$$\log q\left(\{s_t\}\right) = \left\langle \log p\left(\left\{\mathbf{y}_t, \mathbf{x}_t^{(1)}, \cdots, \mathbf{x}_t^{(M)}, s_t\right\} | \boldsymbol{\theta}\right)\right\rangle_x - \log z \tag{15}$$

$$\log q\left(\left\{\mathbf{x}_t^{(1)}, \cdots, \mathbf{x}_t^{(M)}\right\}\right) = \left\langle \log p\left(\left\{\mathbf{y}_t, \mathbf{x}_t^{(1)}, \cdots, \mathbf{x}_t^{(M)}, s_t\right\} | \boldsymbol{\theta}\right)\right\rangle_s - \log z' \tag{16}$$

with z and z' being normalizing constants so that the posteriors sum or integrate to 1.

Substituting the expressions from Eq 10 into Eq 15 reveals that the variational log-posterior of the switching state can be written as:

$$\log q\left(\{s_t\}\right) = \sum_{m=1}^{M} \mathbb{1}[s_0 = m] \log \boldsymbol{\rho}_m + \sum_{t=1}^{T} \sum_{m,n=1}^{M} \mathbb{1}\left[s_t = m, s_{t-1} = n\right] \log \boldsymbol{\phi}_{m,n}$$
$$+ \sum_{t=1}^{T} \sum_{m=1}^{M} \mathbb{1}[s_t = m] g_t^{(m)} - \log \zeta \tag{17}$$
$$\text{with } g_t^{(m)} \triangleq -\frac{1}{2} \left\langle \left(\mathbf{y}_t - \mathbf{G}^{(m)} \mathbf{x}_t^{(m)}\right)^\top \mathbf{R}^{-1} \left(\mathbf{y}_t - \mathbf{G}^{(m)} \mathbf{x}_t^{(m)}\right) \right\rangle_x \tag{18}$$

This equation is identical to the log-posterior density of the discrete-valued states in an HMM with $\exp\{g_t^{(m)}\}$ as observation probabilities. In other words, $g_t^{(m)}$ functions as the model log-evidence of the mth state-space model in generating the data at time t in the HMM process. Thus, the desired posterior distribution, i.e. $q\left(s_t = m\right)$ at individual time points, can be expressed in terms of forward-backward variables $(\alpha_t(m), \beta_t(m))$ from the forward-backward procedure [72] and computed efficiently (S3 Appendix).

Similarly, using the expressions from Eq 10 and Eq 16, we obtain the following variational log-posterior of the real-valued states in the Gaussian SSMs:

$$\log q\left(\left\{\mathbf{x}_t^{(1)}, \cdots, \mathbf{x}_t^{(M)}\right\}\right) = -\frac{1}{2} \sum_{m=1}^{M} \left(\mathbf{x}_0^{(m)} - \boldsymbol{\mu}^{(m)}\right)^\top \mathbf{Q}_0^{(m)^{-1}} \left(\mathbf{x}_0^{(m)} - \boldsymbol{\mu}^{(m)}\right)$$
$$- \frac{1}{2} \sum_{m=1}^{M} \sum_{t=1}^{T} \left(\mathbf{x}_t^{(m)} - \mathbf{F}^{(m)} \mathbf{x}_{t-1}^{(m)}\right)^\top \mathbf{Q}^{(m)^{-1}} \left(\mathbf{x}_t^{(m)} - \mathbf{F}^{(m)} \mathbf{x}_{t-1}^{(m)}\right)$$
$$- \frac{1}{2} \sum_{t=1}^{T} \sum_{m=1}^{M} h_t^{(m)} \left(\mathbf{y}_t - \mathbf{G}^{(m)} \mathbf{x}_t^{(m)}\right)^\top \mathbf{R}^{-1} \left(\mathbf{y}_t - \mathbf{G}^{(m)} \mathbf{x}_t^{(m)}\right) - \log \zeta' \tag{19}$$
$$\text{with } h_t^{(m)} \triangleq \langle \mathbb{1}[s_t = m] \rangle_s \tag{20}$$

that factorizes over the M parallel state-space models, i.e.,

$$\log q\left(\left\{\mathbf{x}_t^{(1)}, \cdots, \mathbf{x}_t^{(M)}\right\}\right) = \sum_{m=1}^{M} \log q\left(\left\{\mathbf{x}_t^{(m)}\right\}\right) \tag{21}$$

Each of the log-posteriors within the sum takes the familiar Gaussian density form:

$$\begin{aligned}\log q\left(\left\{\mathbf{x}_t^{(m)}\right\}\right) = &-\frac{1}{2}\left(\mathbf{x}_0^{(m)} - \boldsymbol{\mu}^{(m)}\right)^\top \mathbf{Q}_0^{(m)^{-1}}\left(\mathbf{x}_0^{(m)} - \boldsymbol{\mu}^{(m)}\right)\\ &-\frac{1}{2}\sum_{t=1}^{T}\left(\mathbf{x}_t^{(m)} - \mathbf{F}^{(m)}\mathbf{x}_{t-1}^{(m)}\right)^\top \mathbf{Q}^{(m)^{-1}}\left(\mathbf{x}_t^{(m)} - \mathbf{F}^{(m)}\mathbf{x}_{t-1}^{(m)}\right)\\ &-\frac{1}{2}\sum_{t=1}^{T} h_t^{(m)}\left(\mathbf{y}_t - \mathbf{G}^{(m)}\mathbf{x}_t^{(m)}\right)^\top \mathbf{R}^{-1}\left(\mathbf{y}_t - \mathbf{G}^{(m)}\mathbf{x}_t^{(m)}\right) - \log \zeta_m^{'} \qquad (22)\end{aligned}$$

that can be computed using a forward pass through Kalman filter, followed by a backward pass through RTS smoother to get the posterior mean and covariance matrices, $\left\{\mathbf{x}_{t|T}^{(m)}, \boldsymbol{\Sigma}_{t|T}^{(m)}, \boldsymbol{\Sigma}_{t,t-1|T}^{(m)}\right\}$, as shown in S3 Appendix.

Given the third term in Eq 22, Kalman smoothing here should be modified to use $\mathbf{R}/h_t^{(m)}$ as the observation noise covariance. Scaling the observation noise leads to an intuitive interpretation: when $h_t^{(m)} \to 0$, resulting in high effective observation noise, the hidden state update that follows one-step prediction during Kalman filtering is effectively skipped for that time point; when $h_t^{(m)} \to 1$, the hidden state is updated as in recursions without switching. In this sense, $h_t^{(m)}$ represents the model responsibility of the mth state-space model in generating the observed data at the time point t.

Fixed-point iterations

The variables $g_t^{(m)}$ and $h_t^{(m)}$ are the bridges between the distributions p and q, replacing the stochastic dependencies with deterministic quantities. The variational log-posterior of the discrete switching states $\{s_t\}$ in Eq 18 involves some summary statistics of the real-valued states $\{\mathbf{x}_t^{(1)}, \cdots, \mathbf{x}_t^{(M)}\}$ w.r.t. the approximate distribution q, and vice-versa in Eq 20. This motivates an iterative procedure to update the forward-backward variables and posterior means and covariances in a cyclic fashion to find the optimal variational parameters $\left\{\alpha_t(m), \beta_t(m), \mathbf{x}_{t|T}^{(m)}, \boldsymbol{\Sigma}_{t|T}^{(m)}, \boldsymbol{\Sigma}_{t,t-1|T}^{(m)}\right\}$:

1. Run forward-backward procedure to update $\{\alpha_t(m), \beta_t(m)\}$.
2. Compute $h_t^{(m)}$ from the updated $\{\alpha_t(m), \beta_t(m)\}$.
3. Run Kalman filter and RTS smoother to update $\left\{\mathbf{x}_{t|T}^{(m)}, \boldsymbol{\Sigma}_{t|T}^{(m)}, \boldsymbol{\Sigma}_{t,t-1|T}^{(m)}\right\}$.
4. Compute $g_t^{(m)}$ from the updated $\left\{\mathbf{x}_{t|T}^{(m)}, \boldsymbol{\Sigma}_{t|T}^{(m)}\right\}$.

During such iterations, the negative variational free energy can be computed using log-likelihood values from the Kalman filter and forward-backward procedure as shown in S1 Appendix. We stop the fixed-point iterations when the model evidence and model responsibility, i.e., $\{g_t^{(m)}, h_t^{(m)}\}$, have stabilized or when the negative free energy stops increasing (see S3 Appendix). One caveat here is that the negative free energy is not jointly concave w.r.t. the variational parameters, so fixed point iterations are not guaranteed to reach global maxima. In fact, the space of the variational parameters may contain many local maxima, which make the initialization an important factor in the performance of these fixed-point iterations. We address this technical issue below in the Initialization of fixed-point iterations section.

Parameter learning using generalized EM algorithm

Once the approximation of the hidden state posterior can be computed efficiently, one can employ an EM-like algorithm to learn the model parameters of the Gaussian SSMs and HMM. To this end, starting from an initial guess of model parameters, we first repeat the fixed point iterations until convergence to find the optimal variational parameters, $\left\{\alpha_t(m), \beta_t(m), \mathbf{x}_{t|T}^{(m)}, \mathbf{\Sigma}_{t|T}^{(m)}, \mathbf{\Sigma}_{t,t-1|T}^{(m)}\right\}$, which parameterize the approximate hidden state posterior (E-step). Next, we update the model parameters of the individual Gaussian SSMs and HMM to maximize the negative variational free energy using the converged variational parameters (M-step). Iterating between these two steps constitutes an instance of *generalized* EM algorithm where in lieu of data log-likelihood, a lower bound on the log-likelihood is maximized over successive iterations [84]. A flowchart of this variational learning algorithm is shown in Fig 1.

In the following section, we derive closed-form update equations for the model parameters of the Gaussian SSMs and HMM, given the approximate hidden state posterior. We note that these M-step equations can be derived from the complete log-likelihood expression in Eq 10 under the expectation w.r.t. the variational approximate distribution q, because only the first term in Eq 14 depends on the parameters $\boldsymbol{\theta}$. It is therefore sufficient to maximize this term for the optimization problem stated in Eq 13.

Specifically, at the ith EM iteration, with the converged variational parameters, $\left\{\alpha_t(m), \beta_t(m), \mathbf{x}_{t|T}^{(m)}, \mathbf{\Sigma}_{t|T}^{(m)}, \mathbf{\Sigma}_{t,t-1|T}^{(m)}\right\}^i$, we compute the following summary statistics:

$$
\begin{aligned}
\mathbf{A}^{(m)} &\triangleq \sum_{t=1}^{T} \mathbb{E}\left[\mathbf{x}_t^{(m)}\right] = \sum_{t=1}^{T} \mathbf{x}_{t|T}^{(m)} \\
\mathbf{B}^{(m)} &\triangleq \sum_{t=1}^{T} \mathbb{E}\left[\mathbf{x}_t^{(m)} \mathbf{x}_{t-1}^{(m)\top}\right] = \sum_{t=1}^{T} \mathbf{\Sigma}_{t,t-1|T}^{(m)} + \mathbf{x}_{t|T}^{(m)} \mathbf{x}_{t-1|T}^{(m)\top} \\
\mathbf{C}^{(m)} &\triangleq \sum_{t=1}^{T} \mathbb{E}\left[\mathbf{x}_t^{(m)} \mathbf{x}_t^{(m)\top}\right] = \sum_{t=1}^{T} \mathbf{\Sigma}_{t|T}^{(m)} + \mathbf{x}_{t|T}^{(m)} \mathbf{x}_{t|T}^{(m)\top} \\
p_{t|T}(m) &\triangleq \mathbb{P}\left[s_t = m\right] = \mathbb{E}\left[\mathbb{1}[s_t = m]\right] = h_t^{(m)} \\
p_{t,t-1|T}(m,n) &\triangleq \mathbb{P}\left[s_t = m, s_{t-1} = n\right] = \mathbb{E}\left[\mathbb{1}[s_t = m, s_{t-1} = n]\right]
\end{aligned}
$$

S3 Appendix provides full recursions used to compute these summary statistics, which are needed to take the expectation of the complete log-likelihood in Eq 10:

$$
\begin{aligned}
&\mathbb{E}\left[\log p\left(\left\{\mathbf{y}_t, \mathbf{x}_t^{(1)}, \cdots, \mathbf{x}_t^{(M)}, s_t\right\} | \boldsymbol{\theta}\right)\right] \\
&= -\frac{T}{2} \log |2\pi \mathbf{R}| - \frac{1}{2} \sum_{m=1}^{M} \log \left|2\pi \mathbf{Q}_0^{(m)}\right| - \frac{T}{2} \sum_{m=1}^{M} \log \left|2\pi \mathbf{Q}^{(m)}\right| \\
&\quad - \frac{1}{2} \sum_{m=1}^{M} \sum_{t=1}^{T} h_t^{(m)} \operatorname{Tr}\left\{\mathbf{R}^{-1}\left(\left(\mathbf{y}_t - \mathbf{G}^{(m)} \mathbf{x}_{t|T}^{(m)}\right)\left(\mathbf{y}_t - \mathbf{G}^{(m)} \mathbf{x}_{t|T}^{(m)}\right)^\top + \mathbf{G}^{(m)} \mathbf{\Sigma}_{t|T}^{(m)} \mathbf{G}^{(m)\top}\right)\right\} \\
&\quad - \frac{1}{2} \sum_{m=1}^{M} \operatorname{Tr}\left\{\mathbf{Q}_0^{(m)-1}\left(\left(\mathbf{x}_{0|T}^{(m)} - \boldsymbol{\mu}^{(m)}\right)\left(\mathbf{x}_{0|T}^{(m)} - \boldsymbol{\mu}^{(m)}\right)^\top + \mathbf{\Sigma}_{0|T}^{(m)}\right)\right\} \\
&\quad - \frac{1}{2} \sum_{m=1}^{M} \operatorname{Tr}\left\{\mathbf{Q}^{(m)-1}\left(\mathbf{C}^{(m)} - \mathbf{B}^{(m)} \mathbf{F}^{(m)\top} - \mathbf{F}^{(m)} \mathbf{B}^{(m)\top} + \mathbf{F}^{(m)} \mathbf{A}^{(m)} \mathbf{F}^{(m)\top}\right)\right\} \\
&\quad + \sum_{m=1}^{M} p_{0|T}(m) \log \boldsymbol{\rho}_m + \sum_{t=1}^{T} \sum_{m,n=1}^{M} p_{t,t-1|T}(m,n) \log \boldsymbol{\phi}_{m,n}
\end{aligned} \tag{23}
$$

The optimal parameters, $\boldsymbol{\theta}^i \triangleq \left\{\left\{\boldsymbol{\mu}^{(m)^i}, \mathbf{Q}_0^{(m)^i}, \mathbf{F}^{(m)^i}, \mathbf{Q}^{(m)^i}, \mathbf{G}^{(m)^i}\right\}, \boldsymbol{\rho}^i, \boldsymbol{\phi}^i, \mathbf{R}^i\right\}$ for $m = 1, \cdots, M$, which maximize Eq 23, can be obtained in closed-form by taking individual partial derivatives. The parameter subset $\left\{\boldsymbol{\mu}^{(m)}, \mathbf{Q}_0^{(m)}, \mathbf{F}^{(m)}, \mathbf{Q}^{(m)}, \mathbf{G}^{(m)}\right\}$

can be updated for each Gaussian SSM through the usual equations described in [71]:

$$\boldsymbol{\mu}^{(m)^i} = \mathbf{x}_{0|T}^{(m)} \tag{24}$$

$$\mathbf{Q}_0^{(m)^i} = \boldsymbol{\Sigma}_{0|T}^{(m)} + \mathbf{x}_{0|T}^{(m)}\mathbf{x}_{0|T}^{(m)^\top} - \mathbf{x}_{0|T}^{(m)}\boldsymbol{\mu}^{(m)^{i\top}} - \boldsymbol{\mu}^{(m)^i}\mathbf{x}_{0|T}^{(m)^\top} + \boldsymbol{\mu}^{(m)^i}\boldsymbol{\mu}^{(m)^{i\top}} \tag{25}$$

$$\mathbf{F}^{(m)^i} = \mathbf{B}^{(m)}\mathbf{A}^{(m)^{-1}} \tag{26}$$

$$\mathbf{Q}^{(m)^i} = \frac{1}{T}\left(\mathbf{C}^{(m)} - \mathbf{B}^{(m)}\mathbf{F}^{(m)^{i\top}} - \mathbf{F}^{(m)^i}\mathbf{B}^{(m)^\top} + \mathbf{F}^{(m)^i}\mathbf{A}^{(m)}\mathbf{F}^{(m)^{i\top}}\right) \tag{27}$$

with a slight exception for $\mathbf{G}^{(m)}$ due to the product with the switching state:

$$\mathbf{G}^{(m)^i} = \left(\sum_{t=1}^{T} h_t^{(m)}\mathbf{y}_t\mathbf{x}_{t|T}^{(m)^\top}\right)\left(\sum_{t=1}^{T} h_t^{(m)}\left(\boldsymbol{\Sigma}_{t|T}^{(m)} + \mathbf{x}_{t|T}^{(m)}\mathbf{x}_{t|T}^{(m)^\top}\right)\right)^{-1} \tag{28}$$

We note that since the M Gaussian SSMs have independent dynamics, these updates can be completed efficiently in parallel.

Similarly, the usual update equations for an HMM can be used to update $\{\boldsymbol{\rho}, \boldsymbol{\phi}\}$ [80]:

$$\boldsymbol{\rho}_m^i = p_{0|T}(m) \tag{29}$$

$$\boldsymbol{\phi}_{m,n}^i = \frac{\sum_{t=1}^{T} p_{t,t-1|T}(m,n)}{\sum_{t=1}^{T}\sum_{m=1}^{M} p_{t,t-1|T}(m,n)} \tag{30}$$

As noted earlier, the observation probabilities of the HMM are not explicitly updated as a parameter, since the variational model evidence, $g_t^{(m)}$, is converged through the fixed-point iterations and used as point estimates of the (log) observation probability to relate the hidden states of Gaussian SSMs to the observation at each time point.

Finally, the update equation for $\mathbf{R}$ pools the posterior estimates of hidden states across the M Gaussian SSMs:

$$\mathbf{R}^i = \frac{1}{T}\sum_{m=1}^{M}\sum_{t=1}^{T} h_t^{(m)}\boldsymbol{\Omega}^{(m)} \tag{31}$$

where $\boldsymbol{\Omega}^{(m)}$ captures the contribution from the mth model:

$$\boldsymbol{\Omega}^{(m)} = \left(\mathbf{y}_t - \mathbf{G}^{(m)^i}\mathbf{x}_{t|T}^{(m)}\right)\left(\mathbf{y}_t - \mathbf{G}^{(m)^i}\mathbf{x}_{t|T}^{(m)}\right)^\top + \mathbf{G}^{(m)^i}\boldsymbol{\Sigma}_{t|T}^{(m)}\mathbf{G}^{(m)^{i\top}} \tag{32}$$

This update equation for $\mathbf{R}$ is an instance of joint estimation of parameters shared

among Gaussian SSMs. In a more general case where each state-space model has its individual observation noise covariance $\mathbf{R}^{(m)}$, the update equation takes the form:

$$\mathbf{R}^{(m)^i} = \frac{1}{\sum_{t=1}^{T} h_t^{(m)}} \sum_{t=1}^{T} h_t^{(m)} \boldsymbol{\Omega}^{(m)} \tag{33}$$

It is also possible for other Gaussian SSM parameters $\left\{\boldsymbol{\mu}^{(m)}, \mathbf{Q}_0^{(m)}, \mathbf{F}^{(m)}, \mathbf{Q}^{(m)}, \mathbf{G}^{(m)}\right\}$ to be partially shared among different models. Closed-form update equations in these cases can be derived. This extension exploits the flexibility of the variational Bayesian method to accommodate different generative models. Two such examples are studied in this paper, and we provide the derivations of their update equations in S2 Appendix.

Initialization of fixed-point iterations

As shown above, the M-step equations provide optimal updates of parameters in a convex optimization setting given the multivariate Gaussian distribution q and the posterior hidden state estimates. In contrast, the fixed-point iterations in the E-step are not guaranteed to achieve globally maximal negative free energy due to the non-concavity of the negative free energy w.r.t. the variational parameters. This makes the final approximate distribution at the end of fixed-point iterations very sensitive to initialization. Moreover, while the fixed-point iterations are defined explicitly step-by-step, it is not obvious how to initialize these iterations. Thus, here we describe two practical initialization approaches.

Deterministic annealing. This entropy-motivated initialization technique was proposed along with the variational framework to alleviate getting trapped in local maxima during the fixed-point iterations [42, 85]. Specifically, equal model responsibilities are used as the initial $h_t^{(m)}$ at the onset of the first E-step, followed by RTS smoothing and forward-backward algorithm to compute $g_t^{(m)}$ and $h_t^{(m)}$ with definitions modified by a temperature parameter $\mathcal{T}$:

$$g_t^{(m)} = \frac{1}{\mathcal{T}} \left(-\frac{1}{2} \left\langle \left(\mathbf{y}_t - \mathbf{G}^{(m)}\mathbf{x}_t^{(m)}\right)^\top \mathbf{R}^{-1} \left(\mathbf{y}_t - \mathbf{G}^{(m)}\mathbf{x}_t^{(m)}\right) \right\rangle_x \right) \tag{34}$$

$$h_t^{(m)} = \frac{1}{\mathcal{T}} \left(\langle \mathbb{1}[s_t = m] \rangle_s \right) \tag{35}$$

The temperature $\mathcal{T}$ cools over successive fixed-point iterations via the decay function $\mathcal{T}_{i+1} = (\mathcal{T}_i + 1)/2$. In essence, a larger $\mathcal{T}$ allows the iterations to explore a bigger subspace with high negative free energy entropy, which gradually decreases in trying to identify an optimal approximate distribution. This initialization technique was necessary for the variational approximation to produce any reasonable results [42].

After the first E-step, $h_t^{(m)}$ is not re-initialized with equal model responsibilities to allow a warm start in subsequent iterations. However, this makes the algorithm severely limited by the results of the first round of fixed-point iterations. Under this initialization scheme, once the $h_t^{(m)}$ for the mth model gets close to zero, that model cannot regain responsibility for that time point in subsequent iterations. One may choose to reset the $h_t^{(m)}$ to be equal across models at every E-step, but that tends to select only one of the Gaussian SSMs for the entire duration as a local maximum. Regardless, with the model parameters fixed during the E-step, potential local maxima are likely selected, since the annealing is equivalent across the M Gaussian SSMs. Also, initializing $h_t^{(m)}$ with equal responsibilities assumes all models to explain all time points equally well, which is certainly far from the true posterior p. Thus, a better initialization should discern among the Gaussian SSMs and try to initialize close to the global maximum.

Interpolated densities. Here we propose a different initialization technique that statistically compares the M Gaussian SSMs for their likelihoods of generating the observation at each time point. Specifically, we initialize $g_t^{(m)}$ using the interpolated density [86, 87], i.e., the probability density of the observation at a given time point conditioned on all other time points under the mth model.

$$g_t^{(m)} = \log p^{(m)} \left(y_t | y_{1,\cdots,t-1,t+1,\cdots,T} \right) \tag{36}$$

In other words, we attempt to initialize based on how well each Gaussian SSM predicts the current observation, $\mathbf{y}_t$, based on all the past and future observations. We expect this informative initialization of $g_t^{(m)}$ to be close to the global maximum in general. Since conventional Kalman filtering and RTS smoothing cannot compute the interpolated density easily, we utilize a different implementation (see S3 Appendix) [87].

This new initialization technique is well-grounded in the view of $g_t^{(m)}$ as the

log-evidence of generating the observation at each time point within the HMM of a discrete-valued state $s_t = m$, with $m \in \{1, \cdots, M\}$. In the absence of known Gaussian SSM states, the next best choice is to evaluate which model dynamic provides the closest interpolation from all other time points for the current observation. It can also be seen as a "smoothing" extension of using filtered densities in place of the HMM observation probabilities in the early switching state-space model inference literature [34, 35, 58, 88].

As extensively analyzed in the Segmentation with posterior inference and Segmentation with parameter learning sections in Results, variational inference and learning with interpolated densities substantially improve over deterministic annealing and offer greater segmentation accuracy compared to the other switching inference methods. However, unlike the definition of $g_t^{(m)}$ in Eq 18 that is comparable across arbitrary Gaussian SSMs due to the identical $\mathbf{R}$, interpolated densities are bonafide normalized distribution density functions. Therefore, the model-specific parameters (e.g. $\mathbf{Q}^{(m)}$), especially the hidden state dimensionality, could bias the interpolated densities during the initialization. A simple heuristic is suggested in S3 Appendix to address this bias if present and shows robust performance in the spindle detection problem.

Sleep spindle detection application

To demonstrate the utility of switching state-space models in neural signal processing, we analyzed EEG recorded during overnight sleep from a healthy young adult. The sleep EEG data were collected at the Massachusetts General Hospital Sleep Center after obtaining written informed consent from the subject, and the study protocol was approved by the Massachusetts General Hospital Human Research Committee. The recording was acquired using the 128-channel eego™ mylab EEG amplifier system (ANT Neuro, Enschede, The Netherlands) at a sampling rate of 1 kHz. Ag/AgCl electrodes were arranged in an equidistant Waveguard™ montage (ANT Neuro). The ground and online reference electrodes were placed at the left mastoid and a central electrode Z3, respectively. Sleep staging was scored by a trained polysomnography technician following AASM guidelines [89].

EEG data segments were extracted from the periods scored as non-rapid eye movement (NREM) stage 2 sleep, re-referenced to the common average reference, and

then downsampled to 100 Hz. We analyzed single-channel segments from a left parietal electrode LA2 (analogous to C3 in the International 10-20 system). EEG spectrograms were computed using the multitaper method [24] with 1 s window length and 95 % overlap between adjacent windows (3 discrete prolate spheroidal sequences tapers, corresponding to a time-half-bandwidth product of 2, and 2^{10} minimum number of fast Fourier transform samples) after constant detrending within the sliding window.

Initialization of Gaussian SSM parameters

As mentioned in the Real application: spindle detection section in Results, we modeled slow oscillations (δ) and sleep spindles (ς) observed in EEG recordings during NREM stage 2 sleep using Gaussian SSMs of the following form:

$$\begin{bmatrix} x_{t,1} \\ x_{t,2} \end{bmatrix} = a \begin{bmatrix} \cos\omega & -\sin\omega \\ \sin\omega & \cos\omega \end{bmatrix} \begin{bmatrix} x_{t-1,1} \\ x_{t-1,2} \end{bmatrix} + \begin{bmatrix} w_{t,1} \\ w_{t,2} \end{bmatrix}, \quad \begin{bmatrix} w_{t,1} \\ w_{t,2} \end{bmatrix} \sim \mathcal{N}\left(\mathbf{0}, \begin{bmatrix} \sigma^2 & 0 \\ 0 & \sigma^2 \end{bmatrix}\right) \tag{37}$$

The Gaussian SSM parameters, $\left\{a^\delta, \omega^\delta, (\sigma^2)^\delta\right\}$, $\left\{a^\varsigma, \omega^\varsigma, (\sigma^2)^\varsigma\right\}$, and the observation noise variance R need to be initialized in order to learn the optimal model parameters using the generalized EM algorithm. We accomplished this by fitting two oscillators (one in slow frequency range, the other in spindle frequency range) to the EEG time series, assuming that both oscillations are present for the entire duration. This fitting was done using a standard EM algorithm [71, 90] with the parameters initialized based on our prior knowledge of the typical frequencies of these sleep oscillations:

$$\begin{aligned} a^\delta &= 0.98 & \omega^\delta &= 2\pi \frac{1\,\text{Hz}}{100\,\text{Hz}} & (\sigma^2)^\delta &= 1 \\ a^\varsigma &= 0.98 & \omega^\varsigma &= 2\pi \frac{13\,\text{Hz}}{100\,\text{Hz}} & (\sigma^2)^\varsigma &= 1. \\ & & R &= 1 & & \end{aligned}$$

Initial states were taken as zero-mean white noise with variance of 3 and not updated. We ran the EM algorithm for 50 iterations and used the resultant parameters as initial guesses for the Gaussian SSMs in switching state-space models. For the switching inference algorithms that do not have mechanisms to update model parameters, these parameters after the 50 EM iterations were directly used to infer segmentation.

Priors for MAP estimates

Parameters in state-space models of the form in Eq 37 can be subjected to prior distributions to yield MAP instead of ML estimation. We followed [90] to impose priors on the rotation frequency, ω, and the state- and observation-noise variances, σ^2 and R (see S3 Appendix). We used these MAP estimates throughout all the M-steps that involve updating the Gaussian SSM parameters and the observation noise variance.

Code availability

The state-inference and parameter learning algorithms described in this paper will be available as part of the SOMATA Python library on GitHub at https://github.com/mh105/somata on acceptance of the manuscript. SOMATA stands for State-space Oscillator Modeling And Time-series Analysis.

Acknowledgments

We would like to thank Amanda M. Beck for useful discussions on modeling neural signals with oscillators.

References

1. Chen Z, Brown E. State Space Model. Scholarpedia. 2013;8(3):30868. doi:10.4249/scholarpedia.30868.

2. Feng J. Computational Neuroscience: A Comprehensive Approach. Chapman and Hall/CRC; 2003.

3. Kass RE, Eden UT, Brown EN. Analysis of Neural Data. vol. 491. Springer; 2014.

4. Pawitan Y. In All Likelihood: Statistical Modelling and Inference Using Likelihood. Oxford University Press; 2001.

5. Chen Z, Vijayan S, Barbieri R, Wilson MA, Brown EN. Discrete- and Continuous-Time Probabilistic Models and Algorithms for Inferring Neuronal UP and DOWN States. Neural Computation. 2009;21(7):1797–1862. doi:10.1162/neco.2009.06-08-799.

6. Lamus C, Hämäläinen MS, Temereanca S, Brown EN, Purdon PL. A Spatiotemporal Dynamic Distributed Solution to the MEG Inverse Problem. NeuroImage. 2012;63(2):894–909. doi:10.1016/j.neuroimage.2011.11.020.

7. Galka A, Yamashita O, Ozaki T, Biscay R, Valdés-Sosa P. A Solution to the Dynamical Inverse Problem of EEG Generation Using Spatiotemporal Kalman Filtering. NeuroImage. 2004;23(2):435–453. doi:10.1016/j.neuroimage.2004.02.022.

8. Havlicek M, Jan J, Brazdil M, Calhoun VD. Dynamic Granger Causality Based on Kalman Filter for Evaluation of Functional Network Connectivity in fMRI Data. NeuroImage. 2010;53(1):65–77. doi:10.1016/j.neuroimage.2010.05.063.

9. Beck AM, Stephen EP, Purdon PL. State Space Oscillator Models for Neural Data Analysis. In: 2018 40th Annual International Conference of the IEEE

Engineering in Medicine and Biology Society (EMBC). Honolulu, HI: IEEE; 2018. p. 4740–4743.

10. Gramfort A, Strohmeier D, Haueisen J, Hämäläinen MS, Kowalski M. Time-Frequency Mixed-Norm Estimates: Sparse M/EEG Imaging with Non-Stationary Source Activations. NeuroImage. 2013;70:410–422. doi:10.1016/j.neuroimage.2012.12.051.

11. Stein RB, Gossen ER, Jones KE. Neuronal Variability: Noise or Part of the Signal? Nature Reviews Neuroscience. 2005;6(5):389–397. doi:10.1038/nrn1668.

12. Snider RK, Bonds AB. Classification of Non-Stationary Neural Signals. Journal of Neuroscience Methods. 1998;84(1-2):155–166. doi:10.1016/S0165-0270(98)00110-1.

13. Pereda E, Gamundi A, Rial R, González J. Non-Linear Behaviour of Human EEG: Fractal Exponent versus Correlation Dimension in Awake and Sleep Stages. Neuroscience Letters. 1998;250(2):91–94. doi:10.1016/S0304-3940(98)00435-2.

14. Tomko GJ, Crapper DR. Neuronal Variability: Non-Stationary Responses to Identical Visual Stimuli. Brain Research. 1974;79(3):405–418. doi:10.1016/0006-8993(74)90438-7.

15. Wang XJ. Neurophysiological and Computational Principles of Cortical Rhythms in Cognition. Physiological Reviews. 2010;90(3):1195–1268. doi:10.1152/physrev.00035.2008.

16. Tyrcha J, Roudi Y, Marsili M, Hertz J. The Effect of Nonstationarity on Models Inferred from Neural Data. Journal of Statistical Mechanics: Theory and Experiment. 2013;2013(03):P03005.

17. da Silva FL, Blanes W, Kalitzin SN, Parra J, Suffczynski P, Velis DN. Epilepsies as Dynamical Diseases of Brain Systems: Basic Models of the Transition Between Normal and Epileptic Activity. Epilepsia. 2003;44(s12):72–83. doi:10.1111/j.0013-9580.2003.12005.x.

18. Gotman J, Gloor P. Automatic Recognition and Quantification of Interictal Epileptic Activity in the Human Scalp EEG. Electroencephalography and Clinical Neurophysiology. 1976;41(5):513–529. doi:10.1016/0013-4694(76)90063-8.

19. Siapas AG, Wilson MA. Coordinated Interactions between Hippocampal Ripples and Cortical Spindles during Slow-Wave Sleep. Neuron. 1998;21(5):1123–1128. doi:10.1016/S0896-6273(00)80629-7.

20. Luck SJ. Event-Related Potentials. American Psychological Association; 2012.

21. Woodman GF. A Brief Introduction to the Use of Event-Related Potentials in Studies of Perception and Attention. Attention, Perception, & Psychophysics. 2010;72(8):2031–2046. doi:10.3758/BF03196680.

22. Purdon PL, Pavone KJ, Akeju O, Smith AC, Sampson AL, Lee J, et al. The Ageing Brain: Age-dependent Changes in the Electroencephalogram during Propofol and Sevoflurane General Anaesthesia. British Journal of Anaesthesia. 2015;115:i46–i57. doi:10.1093/bja/aev213.

23. Purdon PL, Sampson A, Pavone KJ, Brown EN. Clinical Electroencephalography for Anesthesiologists. Anesthesiology. 2015;123(4):937–960. doi:10.1097/ALN.0000000000000841.

24. Prerau MJ, Brown RE, Bianchi MT, Ellenbogen JM, Purdon PL. Sleep Neurophysiological Dynamics Through the Lens of Multitaper Spectral Analysis. Physiology. 2017;32(1):60–92. doi:10.1152/physiol.00062.2015.

25. Aeschbach D, Borbély AA. All-Night Dynamics of the Human Sleep EEG. Journal of Sleep Research. 1993;2(2):70–81. doi:10.1111/j.1365-2869.1993.tb00065.x.

26. McGinley MJ, Vinck M, Reimer J, Batista-Brito R, Zagha E, Cadwell CR, et al. Waking State: Rapid Variations Modulate Neural and Behavioral Responses. Neuron. 2015;87(6):1143–1161. doi:10.1016/j.neuron.2015.09.012.

27. Thompson RF. The Neural Basis of Basic Associative Learning of Discrete Behavioral Responses. Trends in Neurosciences. 1988;11(4):152–155. doi:10.1016/0166-2236(88)90141-5.

28. Shafritz KM, Kartheiser P, Belger A. Dissociation of Neural Systems Mediating Shifts in Behavioral Response and Cognitive Set. NeuroImage. 2005;25(2):600–606. doi:10.1016/j.neuroimage.2004.12.054.

29. Durstewitz D, Vittoz NM, Floresco SB, Seamans JK. Abrupt Transitions between Prefrontal Neural Ensemble States Accompany Behavioral Transitions during Rule Learning. Neuron. 2010;66(3):438–448. doi:10.1016/j.neuron.2010.03.029.

30. Sadacca BF, Mukherjee N, Vladusich T, Li JX, Katz DB, Miller P. The Behavioral Relevance of Cortical Neural Ensemble Responses Emerges Suddenly. The Journal of Neuroscience. 2016;36(3):655–669. doi:10.1523/JNEUROSCI.2265-15.2016.

31. Kalman RE, Bucy RS. New Results in Linear Filtering and Prediction Theory. Journal of Basic Engineering. 1961;83(1):95–108. doi:10.1115/1.3658902.

32. Chang C, Athans M. State Estimation for Discrete Systems with Switching Parameters. IEEE Transactions on Aerospace and Electronic Systems. 1978;AES-14(3):418–425. doi:10.1109/TAES.1978.308603.

33. Ackerson G, Fu K. On State Estimation in Switching Environments. IEEE Transactions on Automatic Control. 1970;15(1):10–17. doi:10.1109/TAC.1970.1099359.

34. Shumway RH, Stoffer DS. Dynamic Linear Models with Switching. Journal of the American Statistical Association. 1991;86(415):763–769. doi:10.1080/01621459.1991.10475107.

35. Bar-Shalom Y, Li XR. Estimation and Tracking- Principles, Techniques, and Software. Norwood, MA: Artech House, Inc, 1993. 1993;.

36. Harrison PJ, Stevens CF. Bayesian Forecasting. Journal of the Royal Statistical Society: Series B (Methodological). 1976;38(3):205–228.

37. Hamilton JD. A New Approach to the Economic Analysis of Nonstationary Time Series and the Business Cycle. Econometrica. 1989;57(2):357. doi:10.2307/1912559.

38. Elliott RJ, Aggoun L, Moore JB. Hidden Markov Models: Estimation and Control. vol. 29. Springer Science & Business Media; 2008.

39. Fox E, Sudderth EB, Jordan MI, Willsky AS. Bayesian Nonparametric Inference of Switching Dynamic Linear Models. IEEE Transactions on Signal Processing. 2011;59(4):1569–1585. doi:10.1109/TSP.2010.2102756.

40. Kim CJ, Nelson CR. State-Space Models with Regime Switching: Classical and Gibbs-sampling Approaches with Applications. MIT press; 2017.

41. Linderman S, Johnson M, Miller A, Adams R, Blei D, Paninski L. Bayesian Learning and Inference in Recurrent Switching Linear Dynamical Systems. In: Singh A, Zhu J, editors. Proceedings of the 20th International Conference on Artificial Intelligence and Statistics. vol. 54 of Proceedings of Machine Learning Research. PMLR; 2017. p. 914–922.

42. Ghahramani Z, Hinton GE. Variational Learning for Switching State-Space Models. Neural Computation. 2000;12(4):831–864. doi:10.1162/089976600300015619.

43. Attias H. Inferring Parameters and Structure of Latent Variable Models by Variational Bayes. In: Proceedings of the Fifteenth Conference on Uncertainity in Artificial Intelligence; 1999. p. 21–30.

44. Zhang C, Butepage J, Kjellstrom H, Mandt S. Advances in Variational Inference. IEEE Transactions on Pattern Analysis and Machine Intelligence. 2019;41(8):2008–2026. doi:10.1109/TPAMI.2018.2889774.

45. Cekic S, Grandjean D, Renaud O. Time, Frequency, and Time-Varying Granger-causality Measures in Neuroscience. Statistics in Medicine. 2018;37(11):1910–1931. doi:10.1002/sim.7621.

46. Kass RE, Ventura V, Brown EN. Statistical Issues in the Analysis of Neuronal Data. Journal of Neurophysiology. 2005;94(1):8–25. doi:10.1152/jn.00648.2004.

47. Christopoulos DK, León-Ledesma MA. Testing for Granger (Non-)Causality in a Time-varying Coefficient VAR Model. Journal of Forecasting. 2008;27(4):293–303. doi:10.1002/for.1060.

48. Granger CW. Investigating Causal Relations by Econometric Models and Cross-Spectral Methods. Econometrica: journal of the Econometric Society. 1969; p. 424–438.

49. Geweke JF. Measures of Conditional Linear Dependence and Feedback between Time Series. Journal of the American Statistical Association. 1984;79(388):907–915.

50. Kim S, Brown EN. A General Statistical Framework for Assessing Granger Causality. In: 2010 IEEE International Conference on Acoustics, Speech and Signal Processing. IEEE; 2010. p. 2222–2225.

51. Seth AK, Barrett AB, Barnett L. Granger Causality Analysis in Neuroscience and Neuroimaging. Journal of Neuroscience. 2015;35(8):3293–3297.

52. Stokes PA, Purdon PL. A Study of Problems Encountered in Granger Causality Analysis from a Neuroscience Perspective. Proceedings of the National Academy of Sciences. 2017;114(34). doi:10.1073/pnas.1704663114.

53. De Gennaro L, Ferrara M. Sleep Spindles: An Overview. Sleep Medicine Reviews. 2003;7(5):423–440. doi:10.1053/smrv.2002.0252.

54. Matsuda T, Komaki F. Time Series Decomposition into Oscillation Components and Phase Estimation. Neural Computation. 2017;29(2):332–367.

55. Wiener N. Nonlinear Problems in Random Theory. MIT & Wiley; 1966.

56. Mandt S, McInerney J, Abrol F, Ranganath R, Blei D. Variational Tempering. arXiv preprint. 2014;doi:10.48550/ARXIV.1411.1810.

57. Boyen X, Koller D. Tractable Inference for Complex Stochastic Processes. arXiv preprint. 2013;doi:10.48550/ARXIV.1301.7362.

58. Barber D. Expectation Correction for Smoothed Inference in Switching Linear Dynamical Systems. Journal of Machine Learning Research. 2006;7(89):2515–2540.

59. Minka TP. Expectation Propagation for Approximate Bayesian Inference. arXiv preprint. 2013;doi:10.48550/ARXIV.1301.2294.

60. Lee LJ, Attias H, Deng L, Fieguth P. A Multimodal Variational Approach to Learning and Inference in Switching State Space Models [Speech Processing Application]. In: 2004 IEEE International Conference on Acoustics, Speech, and Signal Processing. vol. 5. IEEE; 2004. p. V–505.

61. Alameda-Pineda X, Drouard V, Horaud R. Variational Inference and Learning of Piecewise Linear Dynamical Systems. IEEE Transactions on Neural Networks and Learning Systems. 2021; p. 1–12. doi:10.1109/TNNLS.2021.3054407.

62. Senoz I, Podusenko A, Akbayrak S, Mathys C, de Vries B. The Switching Hierarchical Gaussian Filter. In: 2021 IEEE International Symposium on Information Theory (ISIT). Melbourne, Australia: IEEE; 2021. p. 1373–1378.

63. Nguyen-Quynh G, Becker P, Qiu C, Rudolph M, Neumann G. Switching Recurrent Kalman Networks. arXiv preprint. 2021;doi:10.48550/ARXIV.2111.08291.

64. Glaser JI, Whiteway M, Cunningham JP, Paninski L, Linderman SW. Recurrent Switching Dynamical Systems Models for Multiple Interacting Neural Populations. Neuroscience; 2020.

65. Köhs L, Alt B, Koeppl H. Variational Inference for Continuous-Time Switching Dynamical Systems. arXiv preprint. 2021;doi:10.48550/ARXIV.2109.14492.

66. Wendt SL, Welinder P, Sorensen HB, Peppard PE, Jennum P, Perona P, et al. Inter-Expert and Intra-Expert Reliability in Sleep Spindle Scoring. Clinical Neurophysiology. 2015;126(8):1548–1556.

67. O'Reilly C, Warby SC, Nielsen T. Sleep Spindles: Breaking the Methodological Wall. Frontiers in Human Neuroscience. 2017;10:672.

68. Fernandez LMJ, Lüthi A. Sleep Spindles: Mechanisms and Functions. Physiological Reviews. 2020;100(2):805–868. doi:10.1152/physrev.00042.2018.

69. Warby SC, Wendt SL, Welinder P, Munk EG, Carrillo O, Sorensen HB, et al. Sleep-Spindle Detection: Crowdsourcing and Evaluating Performance of Experts, Non-Experts and Automated Methods. Nature methods. 2014;11(4):385–392.

70. Dimitrov T, He M, Stickgold R, Prerau MJ. Sleep Spindles Comprise a Subset of a Broader Class of Electroencephalogram Events. Sleep. 2021;44(9):zsab099.

71. Shumway RH, Stoffer DS. An Approach to Time Series Smoothing and Forecasting Using the EM Algorithm. Journal of Time Series Analysis. 1982;3(4):253–264. doi:10.1111/j.1467-9892.1982.tb00349.x.

72. Rabiner LR. A Tutorial on Hidden Markov Models and Selected Applications in Speech Recognition. Proceedings of the IEEE. Feb/1989;77(2):257–286. doi:10.1109/5.18626.

73. Baldi P, Chauvin Y, Hunkapiller T, McClure MA. Hidden Markov Models of Biological Primary Sequence Information. Proceedings of the National Academy of Sciences. 1994;91(3):1059–1063. doi:10.1073/pnas.91.3.1059.

74. Smyth P. Hidden Markov Models for Fault Detection in Dynamic Systems. Pattern Recognition. 1994;27(1):149–164. doi:10.1016/0031-3203(94)90024-8.

75. Anderson BDO, Moore JB. Optimal Filtering. Dover Books on Engineering. Mineola, NY: Dover Publ; 2005.

76. Rauch H. Solutions to the Linear Smoothing Problem. IEEE Transactions on Automatic Control. 1963;8(4):371–372. doi:10.1109/TAC.1963.1105600.

77. Rauch HE, Tung F, Striebel CT. Maximum Likelihood Estimates of Linear Dynamic Systems. AIAA Journal. 1965;3(8):1445–1450. doi:10.2514/3.3166.

78. Viterbi A. Error Bounds for Convolutional Codes and an Asymptotically Optimum Decoding Algorithm. IEEE Transactions on Information Theory. 1967;13(2):260–269. doi:10.1109/TIT.1967.1054010.

79. Dempster AP, Laird NM, Rubin DB. Maximum Likelihood from Incomplete Data Via the *EM* Algorithm. Journal of the Royal Statistical Society: Series B (Methodological). 1977;39(1):1–22. doi:10.1111/j.2517-6161.1977.tb01600.x.

80. Baum LE, Petrie T, Soules G, Weiss N. A Maximization Technique Occurring in the Statistical Analysis of Probabilistic Functions of Markov Chains. The Annals of Mathematical Statistics. 1970;41(1):164–171. doi:10.1214/aoms/1177697196.

81. Pearl J, Glymour M, Jewell NP. Causal Inference in Statistics: A Primer. Chichester, West Sussex: Wiley; 2016.

82. Quinn A, Šmídl V. The Variational Bayes Method in Signal Processing. Signals and Communication Technology Ser. New York Boulder: Springer NetLibrary, Inc.; 2006.

83. Gottwald S, Braun DA. The Two Kinds of Free Energy and the Bayesian Revolution. PLOS Computational Biology. 2020;16(12):e1008420. doi:10.1371/journal.pcbi.1008420.

84. Neal RM, Hinton GE. A View of the Em Algorithm That Justifies Incremental, Sparse, and Other Variants. In: Jordan MI, editor. Learning in Graphical Models. Dordrecht: Springer Netherlands; 1998. p. 355–368.

85. Ueda N, Nakano R. Deterministic Annealing Variant of the EM Algorithm. Advances in neural information processing systems. 1994;7.

86. Kohn R, Ansley CF. Estimation, Prediction, and Interpolation for ARIMA Models with Missing Data. Journal of the American Statistical Association. 1986;81(395):751–761. doi:10.1080/01621459.1986.10478332.

87. de Jong P. Smoothing and Interpolation with the State-Space Model. Journal of the American Statistical Association. 1989;84(408):1085–1088. doi:10.1080/01621459.1989.10478876.

88. Kim CJ. Dynamic Linear Models with Markov-switching. Journal of Econometrics. 1994;60(1-2):1–22. doi:10.1016/0304-4076(94)90036-1.

89. Berry RB, Brooks R, Gamaldo C, Harding SM, Lloyd RM, Quan SF, et al. AASM Scoring Manual Updates for 2017 (Version 2.4). Journal of Clinical Sleep Medicine. 2017;13(05):665–666. doi:10.5664/jcsm.6576.

90. Beck AM, He M, Gutierrez RG, Purdon PL. An Iterative Search Algorithm to Identify Oscillatory Dynamics in Neurophysiological Time Series. bioRxiv. 2022; p. 2022.10.30.514422. doi:10.1101/2022.10.30.514422.

Supporting information

S1 Appendix. Free energy calculation and examples

S2 Appendix. Joint estimation of parameters

S3 Appendix. Implementation details