bioRxiv preprint doi: https://doi.org/10.1101/2023.04.11.536163; this version posted April 11, 2023. The copyright holder for this preprint (which was not certified by peer review) is the author/funder, who has granted bioRxiv a license to display the preprint in perpetuity. It is made available under aCC-BY-ND 4.0 International license.

The TriScan: fast and sensitive 3D confocal fluorescence imaging using a simple optical design

Robin Van den Eynde, Wim Vandenberg, Peter Dedecker

Department of Chemistry, KU Leuven, Belgium

robin.vandeneynde@kuleuven.be
wim.vandenberg@kuleuven.be
peter.dedecker@kuleuven.be

April 9, 2023

Abstract

We present the TriScan, a compact and inexpensive fluorescence microscope that combines the speed of widefield microscopy with the 3D-sectioning capabilities of confocal microscopy. The optical layout is based on an add-on module that combines line-scan confocal imaging with a sensitive camera detector, realized using a simple optical layout that permits the use of arbitrarily fast scanning mirrors. The resulting design is theoretically capable of full field-of-view acquisition rates in the kilohertz regime combined with a diffraction-limited resolution and single-molecule sensitivity. Overall, the TriScan microscope provides the ease-of-use and speed of widefield imaging combined with the optical sectioning of one-photon confocal imaging, in a simple and inexpensive design suitable for a broad variety of settings ranging from research to diagnostic applications and screening.

This bioRxiv manuscript describes an ongoing research project and associated preliminary data acquired using an early prototype of the instrument. We welcome and appreciate your enquiries, suggestions, and feedback. Updated versions of this manuscript will be deposited as the project progresses.

The author list reflects the core team and points of contact working on this project, but does not reflect all of the contributions made to this research thus far. We are particularly grateful to Damla Temel (formerly KU Leuven) for assistance in the construction of the initial prototype, Lydia Danglot (IPNP Paris) and Hugo Vankelecom (KU Leuven) for providing samples, and Marcel Leutenegger (Max Planck Institute for Biophysical Research) for initial discussions regarding the practical implementation. We also thank the Research Foundation-Flanders (FWO) and the European Research Council for financial support.

1 Introduction

Fluorescence microscopy is a technique of choice in the life and material sciences. More and more applications require the visualization of optically-large samples such as tissues and tissue models in a way that is compatible with high-throughput and high-content operation. Confocal microscopy is a technique of choice for 3D imaging, though it is intrinsically slow because the fluorescence is collected only from a tiny diffraction-limited volume that must be scanned across the sample (figure 1).

Several strategies have been developed to deliver faster high-performance 3D imaging. Spinning-disk confocal parallelizes the imaging process by simultaneously illuminating the sample through many pinholes at once, though the resulting systems are optically and mechanically complex, suffer from issues such as pinhole cross-talk and low light coupling efficiencies, and are difficult to combine with more advanced features such as adjustable spectral detection. Light-sheet microscopy delivers much faster imaging by combining widefield detection with illumination of the sample using an orthogonal 'sheet' of light, though this requires the introduction of a second objective which limits the numerical aperture of the imaging and also complicates the use of common sample formats such as multiwell plates. These restrictions can be

bioRxiv preprint doi: https://doi.org/10.1101/2023.04.11.536163; this version posted April 11, 2023. The copyright holder for this preprint (which was not certified by peer review) is the author/funder, who has granted bioRxiv a license to display the preprint in perpetuity. It is made available under aCC-BY-ND 4.0 International license.

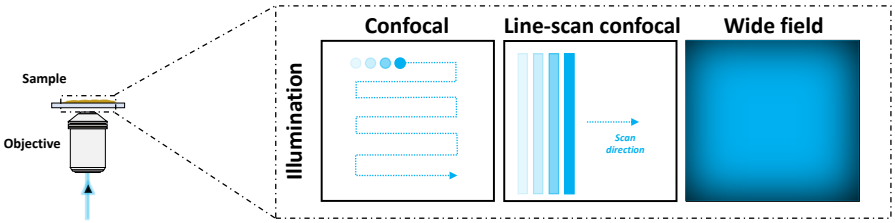

Figure 1: Comparison of classic fluorescence microscopy techniques. Widefield systems are very fast because they illuminate the full field-of-view at once, but provide poor optical sectioning. Confocal systems provide good sectioning but are slow because they must scan a small focus volume over the entire sample. Line-scan confocal systems provide similar sectioning but are much faster since one of the scan directions is eliminated.

mitigated by introducing mirrors into custom sample holders [1] or via the introduction of unconventional imaging geometries or custom optical elements [2–5], but at a cost in complexity and hardware that can reduce versatility, performance, and ease of interpretation, though with the advantage of a reduced phototoxicity. These sophisticated instruments enable highly fascinating experiments, but are less suited to routine 'workhorse' measurements such as diagnostic imaging or screening, where straightforward operation and a lower cost are important.

An alternative approach for fast 3D imaging combines the confocal principle with different geometries for the illumination and optical aperature. In line-scan confocal microscopy, the excitation light is focused into a line rather than a spot and the circular pinhole is replaced with a slit aperture [6]. In this way, a full line can be acquired from the sample at once, providing a dramatic speedup since it eliminates an entire scan axis. A 512 by 512 pixel acquisition, for example, can be sped up by a factor 512 in principle. The use of a slit aperture does have consequences for the imaging performance, in principle leading to an asymmetric PSF and reduced z-sectioning, though these effects are small [7] since typical confocal microscopes are not operated with infinitesimally small pinholes. A number of such instruments have already been developed, including the use of line detectors [8]. Alternatively, the fluorescence line can be rescanned over standard 2D cameras [9] that provide much higher detection effiencies. However, these approaches have relied on the use of two synchronized scanning mirrors to perform the necessary scanning-descanning of the light over the sample and subsequent rescanning over the detector. This limits the scanning mirrors to slower variants, reducing the imaging speed while also imposing synchronization overhead in the hardware and measurement control software. Such slow scanning speeds are also problematic when fast stochastic events must be sampled, as is the case in techniques such as single-molecule localization microscopy (SMLM) or single-particle tracking (SPT).

We reasoned that this design could be simplified and the performance increased by adopting an all-optical synchronization that permits the use of a single, very fast scanning mirror. Intriguingly, such an approach was already proposed in the very initial publication describing confocal line-scan imaging [6], though in a format that is non-straightforward to build and operate. In this contribution, we describe the 'TriScan', a line-scanning confocal that can combine the speed, sensitivity, and convenience of widefield imaging with the optical sectioning of a one-photon confocal, using a comparatively simple optical layout. By delivering a strong imaging performance within a self-contained and inexpensive format, the TriScan offers exciting opportunities as a workhorse system for the fast imaging of 3D samples across a variety of use cases.

2 Results and Discussion

A conceptual scheme of our TriScan is shown in figure 2. The essence of the design is to combine a single scanning mirror with a threefold passage of the light over this mirror. The first passage scans the excitation line over the sample, the second passage descans the emission so that it passes through a slit aperture, and the third passage scans the light over the camera. Figure 3 shows the concrete optical design in which this triple passage is realized by introducing a dichroic mirror that selectively transmits the emission and causes it to be reflected by a broadband mirror. Such an arrangement does attenuate the emission somewhat by requiring a double pass of the emission through the dichroic mirror. This can be avoided by removing this dichroic mirror and replacing the back mirror with a dichroic mirror that can reflect the fluorescence for incident angles close to zero degrees, whereupon the excitation light is introduced such that it is transmitted

bioRxiv preprint doi: https://doi.org/10.1101/2023.04.11.536163; this version posted April 11, 2023. The copyright holder for this preprint (which was not certified by peer review) is the author/funder, who has granted bioRxiv a license to display the preprint in perpetuity. It is made available under aCC-BY-ND 4.0 International license.

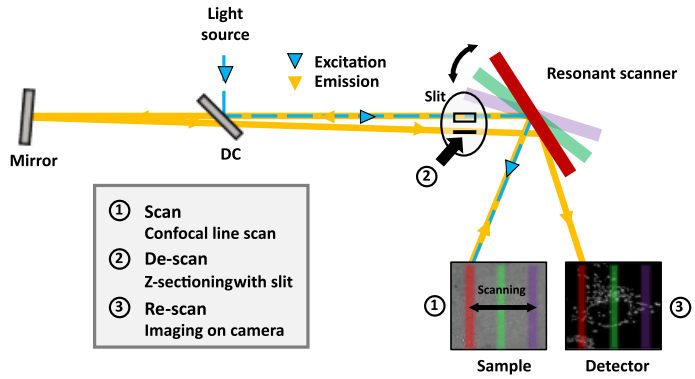

Figure 2: Conceptual scheme of the TriScan microscope. Excitation light is shaped into a line and scanned over the sample. The resulting emission is descanned and reflected by a broadband mirror positioned at a slight angle, after which is scanned again over the camera, forming an image of the sample. The optical synchronization inherent in the design allows the use of very fast scanning mirrors and off-the-shelf, highly sensitive cameras.

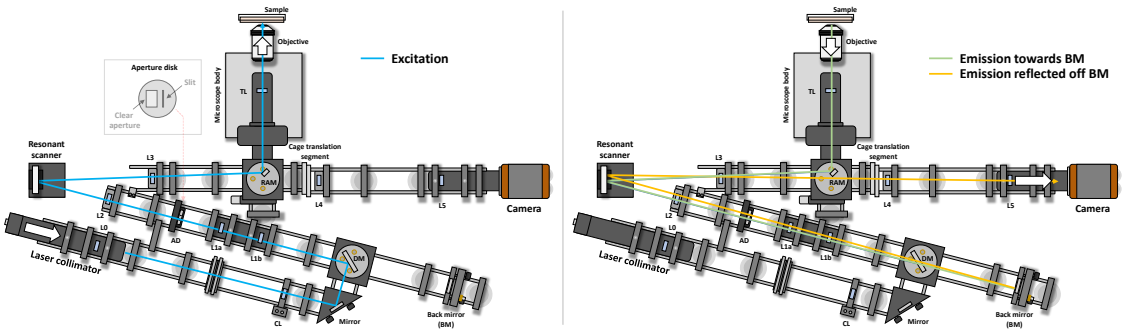

Figure 3: Optical layout using off-the-shelf components. The excitation and emission light paths are shown separately for increased clarity. The two colors for the emission distinguish the light coming from the objective from the light travelling towards the camera. BM: back mirror, DM: dichroic mirror, AD: aperture disk, RAM: right angle mirror, L0-5: lenses, TL: tube lens, CL: cylindrical lens.

by this dichroic.

The use of three passes over a single scanning mirror is a crucial element of our design, because it ensures the synchronization of the scanning process without requiring additional hardware or software. Furthermore, it allows the use of very fast scanning mirrors even if these do not allow full control over the mirror position or other scan parameters. This includes, for example, the inexpensive and reliable resonant scanners that offer scanning rates in the kilohertz regime, with up to 16 kHz scanning frequencies readily available. In principle, this would allow our TriScan to deliver full field-of-view images at a frequency of 32 kHz, though these are unlikely to be realized in practice given the currently-available camera technology as well as the limited brightness of typical samples.

In actual measurements the camera therefore integrates the emission originating from many light sweeps into a single image. This is again a feature of our design. First of all, the potentially large number of sweeps means that fast or transient processes occurring within a single exposure time can be detected and sampled multiple times with very high probability. Furthermore, it effectively eliminates the need to synchronize the scanner motion with the rest of the image acquisition, meaning that the controlling software and hardware does not even need to be aware that a scanning process is occurring. From an outside perspective, an operating TriScan presents the same ease of use and approximates the performance of widefield imaging, but with the 3D imaging performance of confocal imaging. We estimate that the spatial resolution of the instrument is essentially the same as a classical confocal instrument using the same objective, though the z-resolution is about 20 to 30% lower.

Due to the conceptually simple design and low number of components, the overall materials cost specific to the TriScan (excluding always-required components such as excitation light sources, microscope body and objective, camera, etc.) is less than 5000 euro with the current design. The self-contained nature of the optical system also ensures that the concept can be adapted to a wide range of existing and new instrumentation, further aided by the all-optical synchronization and fast speeds of the scanning process that avoid the need

bioRxiv preprint doi: https://doi.org/10.1101/2023.04.11.536163; this version posted April 11, 2023. The copyright holder for this preprint (which was not certified by peer review) is the author/funder, who has granted bioRxiv a license to display the preprint in perpetuity. It is made available under aCC-BY-ND 4.0 International license.

for further software or hardware modification.

We constructed an initial prototype of the device in order to explore the feasibility and design space, which allowed us to obtain proof-of-concept data for different use cases. We commenced by acquiring fluorescence images on mouse neurons stained with phalloidin-Alexa 488, performing both regular widefield and TriScan measurements. Simple scanning of the sample and accompanying (de-)focusing readily revealed the favorable z-sectioning inherent in the TriScan design even though the overall ease-of-use and speed was essentially identical for both modalities (figure 4 and supplementary movie 1). We also imaged an organoid sample in which E-cadherin had been stained with AF488, courtesy Hugo Vankelecom at KU Leuven (supplementary movie 1). The resulting images could be asssembled in a z-stack showing that the instrument indeed supports 3D imaging of optically larger samples.

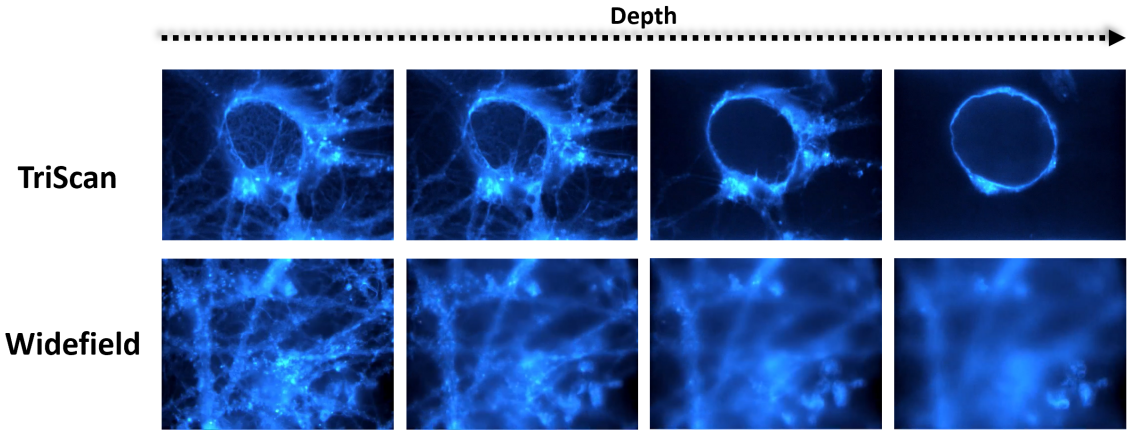

Figure 4: TriScan z-sectioning. Comparison of optical sectioning for different regions of a sample containing labeled neurons. , field of view: 50x50µm.

The fast scanning speed and sensitive nature of the TriScan design also enable challenging methodologies such as single-molecule imaging. While single-molecule localization microscopy has been preformed on confocal platforms [10], typically a widefield or similar methodology is used in order to capture the required emitter dynamics over the full field-of-view. However, this causes challenges when measuring such dynamics in thicker samples due to the presence of out-of-focus fluorescence that rapidly drowns out the signals of individual emitters. To test the potential of the TriScan for such measurements, we performed DNA-PAINT imaging in U2OS cells. Single-molecule signals could be detected using the TriScan though we reduced the scan amplitude in order to compensate for the comparatively low brightness of the used excitation lasers. Figure 5 and supplementary movie 1 show a proof-of-concept superresolution image reconstructed from the resulting data.

3 Current work

The preliminary data shown in this manuscript were acquired using a prototype largely cobbled together from existing parts. We are currently developing a new prototype that is more robust and has an easier-to-align optical layout (figure 6). This should allow us to obtain a markedly higher performance by providing a more optimal positioning of the optical elements.

The current optical design offers a 100x100 μm^2 field of view and was largely conceived for single-molecule imaging. Larger field-of-view designs are also possible, and are currently being designed, though these will probably require the inclusion of custom lenses. The inclusion of such elements would also allow the miniaturization of the overall design to a considerably smaller size than the current optical layout.

4 Conclusion

In this in-progress study we are introducing the TriScan, a fluorescence microscope that combines the speed of a widefield microscope with the sectioning capabilities of a line-scan confocal. The key element is the use of a single scanning mirror combined with a design that ensures optical synchronization, permitting good

bioRxiv preprint doi: https://doi.org/10.1101/2023.04.11.536163; this version posted April 11, 2023. The copyright holder for this preprint (which was not certified by peer review) is the author/funder, who has granted bioRxiv a license to display the preprint in perpetuity. It is made available under aCC-BY-ND 4.0 International license.

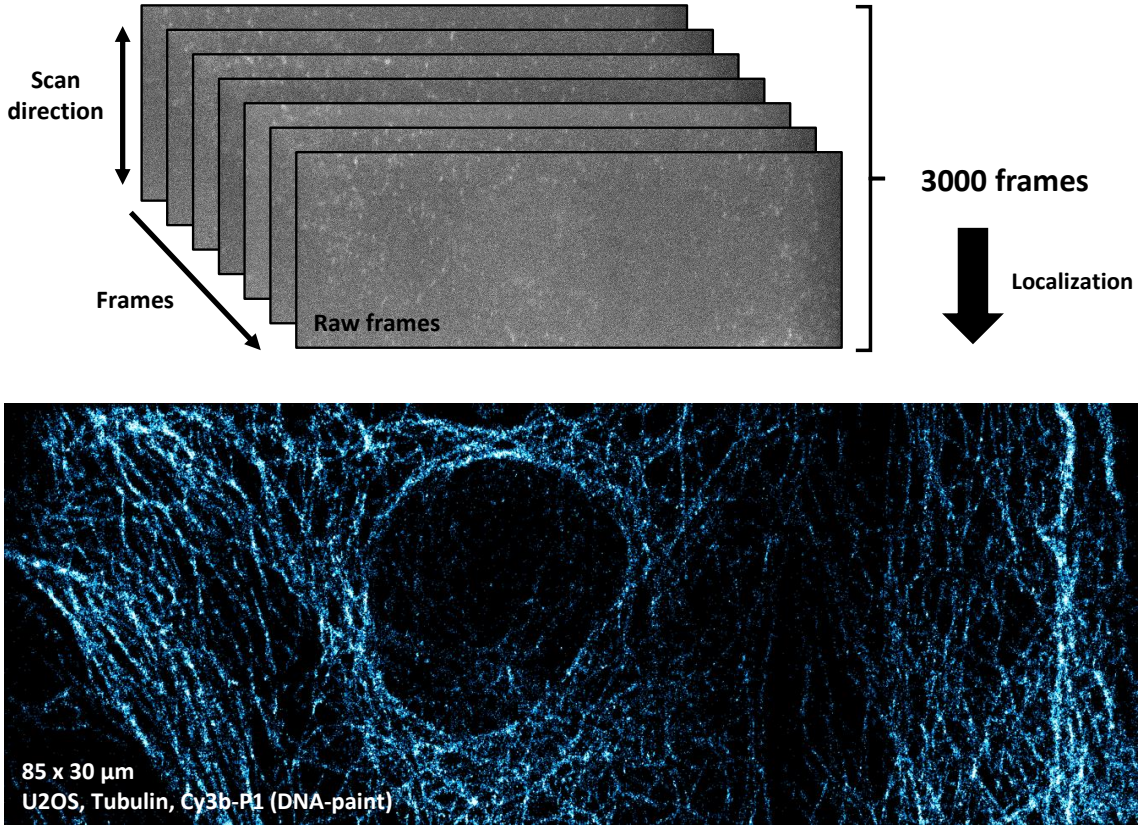

Figure 5: Single molecule imaging. DNA-PAINT experiment in which we stained tubulin with Cy3b. The reconstructed image has been obtained by localizing the emitters in 3000 frames. The field of view is 85x30µm

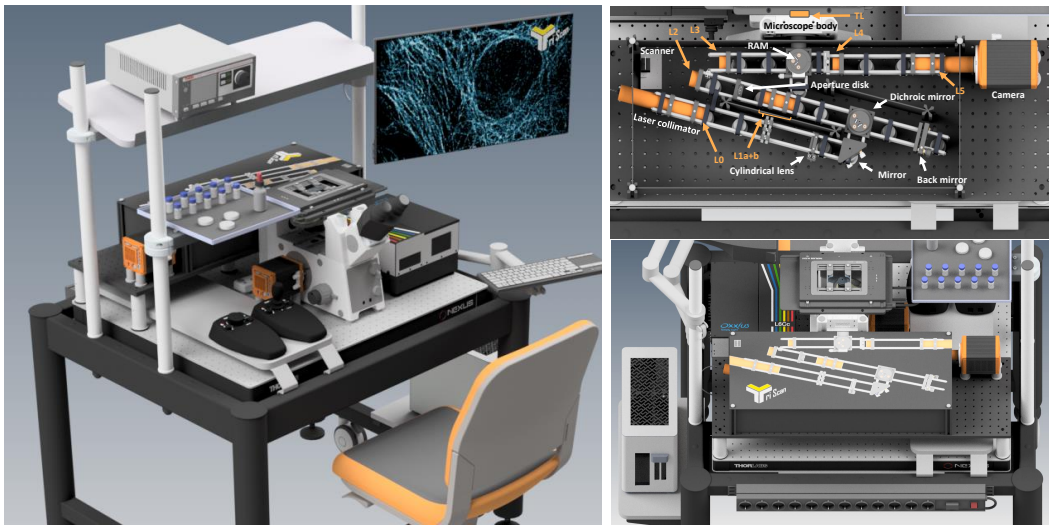

Figure 6: Enclosed TriScan design using off-the-shelf components.

bioRxiv preprint doi: https://doi.org/10.1101/2023.04.11.536163; this version posted April 11, 2023. The copyright holder for this preprint (which was not certified by peer review) is the author/funder, who has granted bioRxiv a license to display the preprint in perpetuity. It is made available under aCC-BY-ND 4.0 International license.

imaging performance, high ease of use, and applications ranging from 3D imaging to single-molecule-based superresolution microscopy. The resulting optical design is simple, inexpensive, and can be introduced as an add-on module. We expect that this design will be useful for realizing robust and comparatively inexpensive microscopes that can perform fast 3D imaging across a range of experiments.

5 Materials and methods

Microscopy

The Triscan was coupled to a commercial IX71 microscopy body (Olympus), all imaging was performed with a 1.2NA 60X water immersion objective (UPLSAPO60XW, Olympus) and recorded using a PCO.edge 4.2 sCMOS camera in the TriScan. The widefield comparison images where acquired with an IDS camera. Either 532 nm (300 mW nominal power GEM laser) or 491 nm (Cobolt Calypso, recorded power 25 mW) excitation was used during acquisition.

TriScan

A full list of parts used in the prototype construction and further information for the TriScan is available upon reasonable request.

References

1. Galland, R. *et al.* 3D high- and super-resolution imaging using single-objective SPIM. *Nat. Methods* **12,** 641–644 (2015).
2. Dunsby, C. Optically sectioned imaging by oblique plane microscopy. *Opt. Express* **16,** 20306–20316 (25 2008). ppublish.
3. Bouchard, M. B. *et al.* Swept confocally-aligned planar excitation (SCAPE) microscopy for high speed volumetric imaging of behaving organisms. *Nat Photonics* **9,** 113–119 (2015).
4. Sapoznik, E. *et al.* A versatile oblique plane microscope for large-scale and high-resolution imaging of subcellular dynamics. *Elife* **9** (2020).
5. Yang, B. *et al.* DaXi-high-resolution, large imaging volume and multi-view single-objective light-sheet microscopy. *Nat Methods* **19,** 461–469 (2022).
6. Brakenhoff, G. J. & Visscher, K. Confocal imaging with bilateral scanning and array detectors. *J. Microsc.* **165,** 139–146 (1992).
7. Pawley, J. B. *Handbook of Biological Confocal Microscopy* 988 (Springer, 2006).
8. Wolleschensky, R., Zimmermann, B. & Kempe, M. High-speed confocal fluorescence imaging with a novel line scanning microscope. *J. Biomed. Opt.* **11,** 064011 (2006).
9. Lee, J., Miyanaga, Y., Ueda, M. & Hohng, S. Video-rate confocal microscopy for single-molecule imaging in live cells and superresolution fluorescence imaging. *Biophys. J.* **103,** 1691–1697 (8 2012). ppublish.
10. Thiele, J. C. *et al.* Confocal Fluorescence-Lifetime Single-Molecule Localization Microscopy. *ACS Nano* **14,** 14190–14200 (2020).