Ivermectin resistance in dung beetles exposed for multiple generations

Daniel González-Tokman[a*], Antonio Arellano-Torres[a], Fernanda Baena-Díaz[a], Carlos Bustos[b], Imelda Martínez M.[a]

[a]Red de Ecoetología, Instituto de Ecología, A. C. Carretera antigua a Coatepec 351. El Haya, Xalapa, Veracruz. Mexico. 91073

[b]Laboratory of Fundamental and Applied Research in Chemical Ecology, Institute of Biology, University of Neuchâtel, 2000 Neuchâtel, Switzerland

*Corresponding author: daniel.gt@inecol.mx

Abstract

Ivermectin is an antiparasitic drug commonly used in cattle, that is excreted in dung, causing lethal and sub-lethal effects on coprophagous non-target fauna. Given that cattle parasites generate resistance to ivermectin, farmers have increased the used doses, with a consequent threat to wild fauna. The dung beetle species *Euoniticellus intermedius* provides ecosystem services by burying dung in cattle pastures, however it is highly threatened by ivermectin. Here we experimentally tested whether *E. intermedius* generates resistance against ivermectin after being exposed for several generations to a sublethal dose. We generated two laboratory lines where beetles were exposed to either ivermectin-treated or ivermectin-free dung for 18 generations. We compared reproductive success of beetles from both lines across generations. Additionally, for each line, we carried-out toxicity experiments with increasing ivermectin concentrations to determine if sensitivity to ivermectin was reduced after some generations of exposure (i. e. if beetles acquired ivermectin resistance by means of transgenerational effects). Our results show that dung beetles do not generate resistance to ivermectin after 18 generations of continuous exposure and quantitative genetic analyses show low genetic variation in response to ivermectin across generations. Together, these results indicate low potential for adaptation to the contaminant. According to our results, dung beetles, and probably other species, are at risk of extinction in ivermectin-contaminated pastures unless they are pre-adapted to tolerate high ivermectin concentrations.

Keywords: antiparasitic, maternal effects, pesticide resistance, Scarabaeinae

Introduction

Ivermectin is one of the most common antiparasitic drugs used in livestock worldwide (Laing, Gillan & Devaney 2017). It is effective against nematodes and arthropod parasites of humans, cattle and pets and it has even been called a 'wonder drug' for its broad spectrum of parasite control and low toxicity for humans (Geary 2005). However, residues of ivermectin are excreted intact in cattle dung and remain active for up to several months in cattle pastures, during which they stay biologically active and threaten non-target coprophagous organisms such as dung flies and beetles (Lumaret *et al.* 2012; Wohde *et al.* 2016). This creates an ecological and economic problem, as coprophagous organisms bury and degrade dung in pastures, helping to maintain soil fertility and eliminating noxious fauna that otherwise would cause livestock disease (Nichols *et al.* 2007). The economic value of dung beetles in cattle pastures is calculated in up to $423 USD per cow and, therefore, their conservation is urgent to maintain their ecosystem services (Lopez-Collado *et al.* 2017).

Ivermectin in dung reduces the emergence of dung flies and beetles and the most susceptible stages are larvae rather than adults (Lumaret *et al.* 2012). Ivermectin use can be the main threat (besides habitat loss) for dung beetle diversity in cattle pastures, even more than the intensity of farming or the degree of forest fragmentation in the surrounding landscape (Alvarado *et al.* 2017). Ivermectin-treated insects, particularly dung flies and beetles, produce less offspring (Lumaret *et al.* 2012; Blanckenhorn *et al.* 2013; González-Tokman *et al.* 2017) and offspring with reproductive disadvantages (Baena-Díaz *et al.* 2018). As ivermectin is slowly excreted in treated cattle, low doses have sublethal effects on the physiology and fitness of dung feeding insects (Verdú *et al.* 2015; González-Tokman *et al.* 2017; Martínez et al. 2017) that even persist across generations

59 (Baena-Díaz *et al.* 2018; Conforti *et al.* 2018). This issue gets more challenging as ivermectin
60 resistance has been reported for several parasites, including nematodes (Shoop 1993; Dent *et al.*
61 2000; Terrill *et al.* 2001; Kaplan 2004; Osei-Atweneboana *et al.* 2011), mites (Currie *et al.* 2004;
62 Perez-Cogollo *et al.* 2010; Castro-Janer *et al.* 2011; Rodríguez-Vivas *et al.* 2014) and insects (Byford
63 *et al.* 1999), leading farmers to increase the used doses to control livestock parasites.

64 In arthropods, ivermectin resistance has been observed in some parasitic mites such as *Boophilus*
65 *microplus* (Benavides & Romero 2000), *Sarcoptes scabiei* (Currie *et al.* 2004; Terada *et al.* 2010)
66 and *Rhipicephalus microplus* (Perez-Cogollo *et al.* 2010). In insects, the evidence of ivermectin
67 resistance is scarce and limited to hematophagous parasitic horn flies (*Haematobia irritans*), that
68 become ca. 3-fold resistant after 23 generations and 6-fold resistant after 50 generations (Byford
69 *et al.* 1999). In *Drosophila melanogaster* flies and *Aedes aegyptii* mosquitoes, resistance to
70 ivermectin is achieved after exposure to other insecticides, revealing cross-resistance (Kane *et al.*
71 2000; Deus *et al.* 2012). Despite ivermectin resistance occurs, it seems to take longer and be less
72 effective than resistance to insecticides or other antiparasitic drugs (Byford *et al.* 1999), probably
73 because of the different physiological mechanisms involved in resistance against different drugs
74 (Kane *et al.* 2000; Seaman *et al.* 2015).

75 Here we tested for the possibility that dung beetles also generate resistance to ivermectin after
76 being exposed for several generations. To evaluate this idea, we performed an experiment where
77 we exposed a line of beetles to a moderate concentration of ivermectin during 18 generations. In
78 parallel, we grew a control line of beetles that was maintained free of ivermectin for 18
79 generations. Across generations, we performed toxicity experiments in both lines to test for the
80 effect of increasing ivermectin concentrations on offspring emergence and developmental time.
81 Toxicity experiments allowed to calculate the lethal concentration 50 (LC50) of ivermectin in both
82 lines. By controlling for genetic relatedness between experimental beetles, we also estimated

83 heritability and genetic variation in ivermectin resistance. We predicted: (1) that beetles in the
84 ivermectin exposed line would tend to increase fitness in contaminated dung across generations;
85 (2) that beetles in the ivermectin exposed line, compared to the control line, would show better
86 performance when exposed to increasing ivermectin concentrations, (3) that resistance ratios
87 would increase in the ivermectin exposed line and (4) that there are genetic variation and
88 heritability in ivermectin responses. If these predictions are met, they would indicate that beetles
89 generate resistance to ivermectin after several generations of exposure, giving promising insights
90 regarding parasite management in contaminated pastures. Otherwise, the use of ivermectin would
91 condemn the studied dung beetles to disappear from contaminated pastures.

92

93 **Materials and methods**

94

95 The present study was carried out with the dung beetle *Euoniticellus intermedius* (Coleoptera:
96 Scarabaeinae). This beetle is native from Africa but was introduced to remove dung from cattle
97 pastures in the United States in the 1970's and has migrated southwards; now it is one of the most
98 abundant species in Mexican cattle pastures (Montes de Oca & Halffter 1998) and is particularly
99 threatened by ivermectin since it shows attraction for contaminated dung (Holter, Sommer &
100 Gronvold 1993).

101 Beetles were collected in San Román ranch, Medellín, Veracruz, Mexico (18°58'19.37" N,
102 96°04'51.43'' W; 42 asl) in July 2017. The owners of the ranch report that they do not use
103 ivermectin to control cattle parasites. To start the experiment, we collected 151 females and 100
104 males and transported them to the laboratory, where the rest of the study was carried-out under
105 insectary conditions (27 ± 1.8 °C; 80% mean humidity). Beetles were fed cattle dung collected in

106 Palo Alto ranch, Acajete, Veracruz, Mexico (19°35’29.1" N, 97°00’05.5”W), where ranch owners
107 also do not use ivermectin. Before feeding the beetles, dung (80-82% humidity) was frozen for at
108 least 48 h at -22°C to eliminate parasites. Collected beetles were reproduced over two weeks in
109 five containers to obtain a first generation of beetles, known to be free of ivermectin for at least
110 one generation.

111 Starting in the F1, beetles were maintained in pairs of one male and one female in 1L plastic
112 containers filled with ca. 700 mL moisted, sterilized sifted soil as substrate. Each pair could
113 reproduce for three weeks (with ivermectin-treated or control dung; see below). After that time
114 the male and the female were removed, and the number and sex of offspring emerged from each
115 container were recorded. We also recorded the number of larvae that did not emerge from brood
116 balls to have a measurement of female fertility and the time from the pair formation to the
117 emergence of the first offspring, as a measurement of developmental time. To avoid inbreeding,
118 siblings were never crossed with each other. Pairs where the male or the female died before a
119 week were not considered for the analyses.

120

121 *Experimental lines and toxicity experiments*

122 In this experiment (Figure 1) we generated two lines of beetles, one that developed 18
123 generations in ivermectin (IVM line) and a parallel, not-exposed line (Control line), that developed
124 free of ivermectin during the same 18 generations. Ivermectin acts on invertebrate cell
125 membranes, specifically in glutamate-gated chloride channels, increasing permeability to chloride
126 ions, leading to cell hyperpolarization (Kane *et al.* 2000; Meyers *et al.* 2015). Given that it acts in
127 neurons and muscular cells, it causes paralysis, inhibition of feeding and reproduction, and death
128 (Laing *et al.* 2017).

129 The experimental treatments were spiked in defrosted dung, which was provided to the beetles
130 three times per week (see similar procedures in (Blanckenhorn *et al.* 2013)). In the treated line
131 (IVM line), beetles from F1-F18 were exposed to ivermectin in the dung (10 µg of ivermectin per kg
132 of fresh dung; Ivermectin, CAS-Number 70288-86-7 Purity of ⩾90% ivermectin B1a and ⩽5%
133 ivermectin B1b, Sigma-18898). Given that ivermectin was diluted in 50 mL acetone per kg of dung,
134 acetone (CAS-Number 1567-89-1; Sigma purity >99.8%) was used as treatment in the Control line
135 (50 mL per kg of fresh dung). Sample sizes for studied lines and generations are presented in
136 Figure 2a. The used ivermectin dose in the IVM line was chosen for being considered moderate, as
137 in some populations of *E. intermedius* it has shown to reduce emergence by 50% (Baena-Díaz *et al.*
138 2018) but in other population it did not affect beetle emergence or physiological condition
139 (González-Tokman *et al.* 2017). As expected, in the present study, the treatment used in the IVM
140 line acted as a moderate selection pressure (see results). In generations F6 and F11-F17 we were
141 not able to register emerged beetles in the IVM lines, so these generations were not considered
142 for statistical analyses. Generations F11-F17 were maintained in three large terraria per line,
143 containing 20 couples per line but we were not able to monitor the reproductive success in
144 experimental lines, so we just maintained the IVM lines without registering the number of brood
145 balls or emerged beetles. Unexpectedly, in F13 high mortality in both lines left only 12 couples in
146 the IVM line. The Control line in F13 suffered even higher mortality leaving only four females and a
147 male. Therefore, we put together the laboratory population of this particular line with 10 new
148 males and 10 females that had spent a generation in the insectarium feeding control dung in a
149 large terrarium. Both lines got recovered the next generation and 20 couples were formed again
150 for each line. This did not cause any evident effect in the next (and last) evaluated generation
151 (F18), where the Control line maintained similar trends in offspring emergency as past generations
152 (see results).

153

154 *Toxicity experiments*

155

156 From a subset of beetles emerged from both lines (in F1, F2, F3, F6 and F18), we carried out
157 toxicity experiments to evaluate the effect of increasing concentrations of ivermectin (Figure 1). By
158 doing this, we could determine whether individuals from the IVM line (compared to the Control
159 line) became resistant to ivermectin across generations. In F1 and F2, the toxicity experiment
160 consisted of two treatments: ivermectin (10 µg of ivermectin per kg of fresh dung) and control
161 (acetone). In F3, F6 and F18, the toxicity experiment consisted in four treatments with increasing
162 concentrations of ivermectin (10, 31 and 62 µg of ivermectin per kg of fresh dung) plus a control
163 treatment (acetone). These new concentrations (IVM31 and IVM62) are considered high, as they
164 reduce emergence of *E. intermedius* three to four times, cause changes in sex ratios by reducing
165 the emergence of females and reduce body size and muscular mass in both males and females
166 (González-Tokman *et al.* 2017). Moreover, the used ivermectin treatments represent realistic
167 concentrations found in dung of cattle treated 2-4 weeks earlier with the recommended dose (500
168 µg of ivermectin per kg of cattle body mass (Wohde *et al.* 2016)). As an additional experiment, five
169 couples emerged from IVM62 in F18 were exposed to the same ivermectin concentration (62 µg of
170 ivermectin per kg of fresh dung), but not a single individual emerged in the new generation, which
171 was not considered for statistical analyses. Sample sizes for each generation, line and treatment
172 are shown in Figure 3. Again, when the male or the female died before a week, the pair was
173 excluded from the analyses. We also estimated the broad sense heritability of reproductive traits
174 using parent-offspring regressions.

175

176 *Statistical analyses*

177 Analyses were done according to (Zuur *et al.* 2009; Crawley 2013) in R program (R Development
178 Core Team 2015) (Sup Mat Script 1). To compare the effect of treatment (Control or IVM) across
179 generations, we carried out generalized linear models (GLM) to analyze the total number of brood
180 balls, the number of emerged beetles, the proportion of emerged beetles and the developmental
181 time. For doing so, the used statistical models included the following predictors as factors:
182 Generation, Line and the interaction Generation X Line. The number of brood balls and the
183 number of emerged beetles were analyzed with a GLM with negative binomial errors (given the
184 high overdispersion found for the models with Poisson errors). The proportion of emerged beetles
185 (number of emerged beetles / total number of brood balls) was analyzed with a GLM with
186 quasibinomial errors (given the high overdispersion found for the model with binomial errors).
187 Differences in the number of days to the first emergence were analyzed with a Cox proportional
188 hazards model.

189 In the toxicity experiments, where different concentrations of ivermectin were tested in F1, F2, F3,
190 F6 and F18, the statistical models also tested the effect of treatment and the triple interaction
191 Generation X Line X Treatment. Given that the triple interaction was significant in most analyses
192 (Table 2), we carried out separate analyses for each generation. These new analyses initially tested
193 the effect of Line, Treatment and the interaction Line X Treatment. The original models were
194 reduced based on the Akaike Information Criterion (AIC, for the case of total number of brood
195 balls and number of emerged beetles) and step by step (removing non-significant terms) for the
196 proportion of emerged beetles and time to the first emergence (as AIC is not available for
197 quasibinomial GLMs or Cox proportional hazards models).

198 In toxicity experiments of F3, F6 and F18, where we tested several ivermectin concentrations, we
199 estimated ivermectin LC50 for Control and IVM lines with logit analyses in R package ecotox (Hlina
200 2020). Resistance ratios (RR), were estimated in F3, F6 and F18 as LC50 in the IVM line / LC50 in

201 the Control line (Mazzarri & Georghiou 1995). Values of RR larger than 3 are considered resistance
202 and values from 1.5-3 are considered tolerance rather than resistance (Byford *et al.* 1999).

203 We performed parent-offspring regressions (Sup Mat Script 2) to estimate the broad sense
204 heritability of number of brood balls, number of emerged beetles, proportion of emerged beetles
205 and days to first emergence. We performed separate regressions for daughters and sons, using the
206 variable values of each couple as the parental value and the values of the respective couple for
207 daughters and sons as the offspring values. The regressions were run using a linear model with
208 normal error distribution, including line and generation as covariates. The interactions between
209 line and parental traits were also tested but excluded from final models. The proportion of
210 emerged beetles was logit transformed to improve normality. Used datasets are in Sup Mat 1, Sup
211 Mat 2, Sup Mat 3, Sup Mat 4 and Sup Mat 5.

212

213

214 **Results**

215

216 *Euoniticellus intermedius* dung beetles did not acquire resistance against ivermectin after being
217 exposed for 18 generations to a moderate concentration of the contaminant (Figures 2 and 3). The
218 effects of Line, Generation and the interaction Line X Generation were significant for most
219 analyzed variables (Table 1), but beetles from the exposed line (IVM) did not improve performance
220 (mainly number of emerged beetles but also total brood balls, proportion of emerged beetles and
221 developmental time) in contaminated dung across generations (Figure 2). Moreover, in the last
222 three monitored generations (F9, F10 and F18), the negative effect of the experimental line on the
223 number of emerged beetles was more evident than in earlier generations (Figure 2b).

224 Toxicity experiments carried out in generations F1, F2, F3, F6 and F18 confirmed that the negative
225 effect of ivermectin is not reduced after 18 generations. This was observed as beetles from the
226 IVM line did not improve performance (mainly number of emerged beetles but also total brood
227 balls and proportion of emerged beetles) in contaminated dung across generations or when
228 compared to beetles in the Control line (Figure 3; Tables 2 and 3). The significant statistical
229 interaction Line X Treatment (Table 2) showed that differences between beetles from the IVM and
230 control lines changed across generations. However, these interactions did not show a consistent
231 improvement in the performance of beetles from IVM line compared to the Control line in either
232 the same or higher ivermectin concentrations (Figure 3). For example, such a trend was observed
233 in the proportion of emerged beetles in F6 but not in F18 (Table 2; Figure 3c). Also, in F3 the
234 number of emerged beetles in the IVM line was consistently lower than in the Control line.
235 Notably, even in the highest ivermectin concentration (62 µg of ivermectin per kg of fresh dung),
236 beetles from both lines built as many brood balls as those in the lowest concentration (Figure 3a).

237 However, such balls rarely emerged (Figure 3c). A different pattern was observed in F18, where
238 the number of emerged beetles was surprisingly high at the highest ivermectin concentration in
239 the IVM line, and was even higher than in the same treatment from the Control line, giving a
240 potential indication of resistance.

241 However, ivermectin resistance ratios (RR) indicated lack of resistance and only small tolerance to
242 the contaminant in generation F3, as LC50 of ivermectin in the IVM line was 1.72 times higher than
243 in the Control line (LC50=21.0 versus 12.2 μg of ivermectin per kg of fresh dung; RR=1.72; Figure
244 3c). However, the RR>1 found in the F3 is mainly explained by the fact that unexposed individuals
245 from the IVM line emerged in very low numbers in this generation (5-6-fold less than unexposed
246 individuals in the Control line) and not because of improved reproductive success at high
247 ivermectin concentrations (Figure 3b). Also, resistance was low in the F6, as the RR was only 1.65
248 (LC50=13.5 versus 8.2 μg of ivermectin per kg of fresh dung in IVM and Control lines, respectively).
249 In F6, unexposed individuals from both lines emerged in similar numbers but individuals exposed
250 to 10 and 31 μg/kg in the IVM line had higher proportion of emerged offspring than exposed
251 individuals from the Control line, indicating some tolerance. Finally, in the F18, resistance was not
252 evident at all, as RR= 0.56 (LC50=15.2 versus 27.3 μg of ivermectin per kg of fresh dung in IVM and
253 Control lines, respectively). Development times also did not improve significantly in exposed
254 beetles from the IVM line across generations or when compared with the Control line (Tables 1
255 and 2; Figure 3d).

256 The parent-offspring regressions were not significant for number of brood balls, number of
257 emerged beetles, proportion of emerged beetles and days to first emergence, indicating that
258 genetic variation does not explain the phenotypic variance for those traits in the studied dung
259 beetles (Table S1).

260 **Discussion**

261

262 In the present study we show that dung beetles *Euoniticellus intermedius* do not generate
263 resistance to ivermectin after 18 generations of exposure and that genetic variation does not
264 explain variation in the observed responses, contrary to our four predictions. Beetles growing in
265 ivermectin during 18 generations did not improve reproductive success in contaminated dung
266 across generations. Moreover, the last three studied generations were more severely affected by
267 ivermectin than earlier generations. Also, beetles exposed for 18 generations to a low ivermectin
268 dose did not improve performance at higher concentrations, as observed by low resistance ratios,
269 which were even <1 in F18. Therefore, descending from a genetic line that has been exposed to
270 ivermectin for 18 generations not only does not improve performance in contaminated dung, but
271 also may have considerable negative effects in non-contaminated food, as observed by the lower
272 reproductive success in unexposed individuals of IVM than Control line. Our evaluation of ten
273 generations with controlled kinship showed that reproductive traits are hardly heritable, which
274 can explain the observed patterns of lack of resistance. These findings give a pessimistic scenario
275 for dung beetles in ivermectin-contaminated pastures around the world, as ivermectin-treated
276 cows excrete, during the first 28 days post-treatment, contaminated dung with doses that are
277 highly lethal for our studied beetles (i. e. higher than 10 µg of ivermectin per kg of fresh dung)
278 (Wohde *et al.* 2016; González-Tokman *et al.* 2017). It is also plausible that higher doses might
279 increase the selective pressure of ivermectin, facilitating evolution, but this possibility remains to
280 be tested.

281 Ivermectin resistance has been studied in parasitic nematodes, parasitic ticks and only one
282 parasitic insect. In nematodes, three generations are enough to generate resistance to ivermectin

283 (Coles, Rhodes & Wolstenholme 2005) whereas in mites *Sarcoptes scabiei*, ivermectin resistance
284 has been reported after 30 and 58 exposure events (i. e. generations) (Currie *et al.* 2004). In horn
285 flies *Haematobia irritans* (Diptera: Muscidae), the only insects studied for ivermectin resistance, 3-
286 fold resistance is detected after 23 generations and reaches 6-fold after 60 generations (Byford *et*
287 *al.* 1999). Our study was carried out for 18 generations across 22 months in the laboratory. Even
288 though we cannot discard that resistance could improve after more generations, as shown in horn
289 flies after 23 generations, we did not detect any trend in that direction. Moreover, individuals in
290 the ivermectin-exposed line did not perform better in ivermectin when exposed to moderate and
291 high ivermectin concentrations (31 and 62 µg/kg; Figure 3b). Unlike parasites, which are highly
292 combatted with antiparasitic drugs and therefore they are permanently exposed to these drugs,
293 non-target organisms such as dung beetles may face intermittent exposure to the contaminant,
294 threatening some but not all generations.

295 Pesticide resistance in insects may be provided by different physiological mechanisms. For
296 example, mutations in glutathione transferases, a family of antioxidant enzymes involved in
297 detoxification and elimination of free radicals, provide insect resistance to DDT, organophosphates
298 and pyrethroids (Enayati, Ranson & Hemingway 2005). In the case of ivermectin, evidence in lice
299 show that lice exposed to a sublethal concentration become more tolerant to a lethal dose later in
300 their lives (Yoon *et al.* 2011); the increased survival is associated to the overexpression of
301 detoxification genes involved in the metabolism of ivermectin. In *Anopheles gambiae* mosquitoes
302 exposed to ivermectin, mechanisms of resistance are associated with the overexpression of
303 immune-response genes (Seaman *et al.* 2015). In the fruit fly *Drosophila melanogaster*, ivermectin
304 resistance is acquired by individuals selected for another antiparasitic drug (nodulisporic acid), and
305 this crossed-resistance is given by glutamate-gated chloride channels (Kane *et al.* 2000). In fruit
306 flies resistant to another macrocyclic lactone, abamectin, resistance is given by overexpression of

307 P-glycoprotein, a transmembrane ATP-dependent drug efflux pump (Luo, Sun & Wu 2013). The
308 extent to which these mechanisms may favor adaptation to ivermectin in dung beetles remains to
309 be studied.

310 Our quantitative genetic analyses show low genetic variation for ivermectin response, indicating
311 low potential for adaptation to ivermectin in the studied dung beetles, as previously reported in
312 dung flies (González-Tokman et al. 2022). Nevertheless, pesticide resistance can evolve by
313 different means, which we cannot discard. First, standing genetic variation may provide resistance
314 prior to the existence of the pesticide (Hawkins *et al.* 2019), and several generations of exposure
315 could make evident favorable combinations. Further studies in *E. intermedius* populations within
316 its native range, where higher genetic variation is expected, would indicate if some genetic
317 variants and combinations can generate more resistant phenotypes. As a second mechanism of
318 evolution, *de novo* mutations could increase resistance due to random processes (Hawkins *et al.*
319 2019), and this could be explored in experimental lines exposed to higher mutation rates (i. e.
320 Wendell et al. 2000). The present experimental evidence also shows that phenotypic plasticity and
321 transgenerational effects are not providing any survival or reproductive benefit, as individuals
322 growing up in ivermectin, and their offspring, did not perform better when consistently exposed to
323 the contaminant. This contrasts with previous studies showing high plasticity in response to
324 ivermectin (González-Tokman et al. 2022) and parental effects (Baena-Díaz et al. 2018) affecting
325 subsequent generations of ivermectin-exposed insects. However, the low observed heritability of
326 the measured traits indicates low evolutionary potential in response to ivermectin. Fast evolution
327 could be experimentally evaluated with artificial selection experiments, where only the fittest
328 genotypes contribute to the next generation, or with the use of IVM doses that are higher than the
329 LC50.

330 Our studied dung beetle, *E. intermedius*, is highly adaptable to new environmental conditions and
331 has colonized several habitats in different continents, probably due to the high female fecundity,
332 high reproductive rate and short developmental time compared to related species of dung beetles
333 (Montes de Oca & Halffter 1998). Even with such high adaptive and invasive potential, this beetle
334 could not generate resistance against low doses of ivermectin after 18 generations of exposure in
335 the laboratory. Considering that the study site is dominated by cattle pastures and approximately
336 half of the farmers use ivermectin (González-Gómez et al. 2018), other species of dung beetles
337 with lower reproductive potential and longer developmental times, will hardly become resistant to
338 ivermectin, unless pre-adaptation, standing variation or random mutation provide protection
339 (Hawkins *et al.* 2019). Further studies in other species of dung-degrading organisms, including
340 native dung beetles, are needed to know if some species will develop ivermectin resistance and
341 can still contribute to dung degradation and soil fertilization in ivermectin-contaminated pastures.
342 This is particularly true as ivermectin sensitivity is highly clustered phylogenetically, with different
343 species within a genus varying up to 500 times in sensitivity to ivermectin (Puniamoorthy *et al.*
344 2014).

345 The effectiveness of ivermectin has led to use it as a prophylactic treatment applied massively in
346 humans for controlling malaria-transmitting mosquitoes (Alout *et al.* 2014). However, it is of
347 current concern whether these mosquitoes will also generate resistance against ivermectin (Pooda
348 *et al.* 2015). Further studies in target and non-target arthropods are needed to evaluate the
349 genetic and physiological mechanisms of ivermectin resistance and the extent to which different
350 arthropod species generate resistance to ivermectin.

351

352 **Acknowledgements**

The authors thank Yorleny Gil Pérez, Ana Kory Martínez Diego and Ricardo Madrigal Chavero for logistic and technical support. FBD is supported by a postdoctoral fellowship CONACYT . This study was funded by CONACYT Ciencia Básica project number 257894 granted to DGT.

References

Alout, H., Krajacich, B.J., Meyers, J.I., Grubaugh, N.D., Brackney, D.E., Kobylinski, K.C., Diclaro, J.W., Bolay, F.K., Fakoli, L.S., Diabaté, A., Dabiré, R.K., Bougma, R.W. & Foy, B.D. (2014) Evaluation of ivermectin mass drug administration for malaria transmission control across different West African environments. *Malaria Journal*, **13**, 1–10.

Alvarado, F., Escobar, F., Williams, D.R., Arroyo-Rodríguez, V. & Escobar-Hernández, F. (2017) The role of livestock intensification and landscape structure in maintaining tropical biodiversity. *Journal of Applied Ecology*, **55**, 185–194.

Baena-Díaz, F., Martínez-M, I., Gil-Pérez, Y. & González-Tokman, D. (2018) Trans-generational effects of ivermectin exposure in dung beetles. *Chemosphere*, **202**, 637–643.

Benavides, E. & Romero, A. (2000) Preliminary results of a larval resistance test to ivermectins using Boophilus microplus reference strains. *Annals of the New York Academy of Sciences*, **916**, 610–2.

Blanckenhorn, W.U., Puniamoorthy, N., Schäfer, M.A. & Scheffczyk, A. (2013) Standardized laboratory tests with 21 species of temperate and tropical sepsid flies confirm their suitability as bioassays of pharmaceutical residues (ivermectin) in cattle dung. *Ecotoxicology and*

375 *Environmental Safety*, **89**, 21–28.

376 Byford, R.L., Craig, M.E., DeRouen, S.M., Kimball, M.D., Morrison, D.G., Wyatt, W.E. & Foil, L.D.
377 (1999) Influence of permethrin, diazinon and ivermectin treatments on insecticide resistance
378 in the horn fly (Diptera: Muscidae). *International Journal for Parasitology*, **29**, 125–135.

379 Castro-Janer, E., Rifran, L., González, P., Niell, C., Piaggio, J., Gil, A. & Schumaker, T.T.S. (2011)
380 Determination of the susceptibility of Rhipicephalus (Boophilus) microplus (Acari: Ixodidae)
381 to ivermectin and fipronil by Larval Immersion Test (LIT) in Uruguay. *Veterinary Parasitology*,
382 **178**, 148–155.

383 Coles, G.C., Rhodes, A.C. & Wolstenholme, A.J. (2005) Rapid selection for ivermectin resistance in
384 Haemonchus contortus. *Veterinary Parasitology*, **129**, 345–347.

385 Conforti, S., Dietrich, J., Kuhn, T., Koppenhagen, N. van, Baur, J., Rohner, P.T., Blanckenhorn, W.U.
386 & Schäfer, M.A. (2018) Comparative effects of the parasiticide ivermectin on survival and
387 reproduction of adult sepsid flies. *Ecotoxicology and Environmental Safety*, **163**, 215–222.

388 Crawley, M.J. (2013) *The R Book*, 2nd ed. Wiley, West Sussex.

389 Currie, B.J., Harumal, P., McKinnon, M. & Walton, S.F. (2004) First documentation of in vivo and in
390 vitro ivermectin resistance in Sarcoptes scabiei. *Clinical Infectious Diseases*, **39**, e8–e12.

391 Dent, J.A., Smith, M.M., Vassilatis, D.K. & Avery, L. (2000) The genetics of ivermectin resistance in
392 Caenorhabditis elegans. *Proceedings of the National Academy of Sciences*, **97**, 2674–2679.

393 Deus, K.M., Saavedra-Rodriguez, K., Butters, M.P., Black, W.C. & Foy, B.D. (2012) The effect of
394 ivermectin in seven strains of Aedes aegypti (Diptera: Culicidae) including a genetically
395 diverse laboratory strain and three permethrin resistant strains. *Journal of Medical*
396 *Entomology*, **49**, 356–363.

397 Enayati, A.A., Ranson, H. & Hemingway, J. (2005) Insect glutathione transferases and insecticide
398 resistance. *Insect Molecular Biology*, **14**, 3–8.

399 Geary, T.G. (2005) Ivermectin 20 years on: Maturation of a wonder drug. *Trends in Parasitology*,
400 **21**, 530–532.

401 González-Gómez, L., Escobar, F., González-Tokman, D., Martínez-MI, A. S., & Cruz, R. M. (2018). La
402 ganadería en Papantla, Veracruz: Posibilidades para la sostenibilidad. Ganadería Sustentable
403 En El Golfo de México. Instituto de Ecología, Xalapa, México, 432.

404 González-Tokman, D., Martínez M., I., Villalobos-Ávalos, Y., Munguía-Steyer, R., Ortiz-Zayas,
405 M.D.R., Cruz-Rosales, M. & Lumaret, J.-P. (2017) Ivermectin alters reproductive success, body
406 condition and sexual trait expression in dung beetles. *Chemosphere*, **178**.

407 González-Tokman, D., Bauerfeind, S. S., Schäfer, M. A., Walters, R. J., Berger, D., & Blanckenhorn,
408 W. U. (2022). Heritable responses to combined effects of heat stress and ivermectin in the
409 yellow dung fly. Chemosphere, 286, 131030.

410 Hawkins, N.J., Bass, C., Dixon, A. & Neve, P. (2019) The evolutionary origins of pesticide resistance.
411 *Biological Reviews*, **94**, 135–155.

412 Holter, P., Sommer, C. & Gronvold, J. (1993) Attractiveness of dung from ivermectin-treated cattle
413 to Danish and afrotropical scarabaeid dung beetles. *Veterinary parasitology*, **48**, 159–169.

414 Kane, N.S., Hirschberg, B., Qian, S., Hunt, D., Thomas, B., Brochu, R., Ludmerer, S.W., Zheng, Y.,
415 Smith, M., Arena, J.P., Cohen, C.J., Schmatz, D., Warmke, J. & Cully, D.F. (2000) Drug-resistant
416 Drosophila indicate glutamate-gated chloride channels are targets for the antiparasitics
417 nodulisporic acid and ivermectin. *Proceedings of the National Academy of Sciences*, **97**,
418 13949–13954.

419 Kaplan, R.M. (2004) Drug resistance in nematodes of veterinary importance: A status report.
420 *Trends in Parasitology*, **20**, 477–481.

421 Laing, R., Gillan, V. & Devaney, E. (2017) Ivermectin – Old drug, new tricks? *Trends in Parasitology*,
422 **33**, 463–472.

423 Lopez-Collado, J., Cruz-Rosales, M., Vilaboa-Arroniz, J., Martínez-Morales, I. & Gonzalez-
424 Hernandez, H. (2017) Contribution of dung beetles to cattle productivity in the tropics: A
425 stochastic-dynamic modeling approach. *Agricultural Systems*, **155**, 78–87.

426 Lumaret, J.-P., Errouissi, F., Floate, K., Römbke, J. & Wardhaugh, K. (2012) A review on the toxicity
427 and non-target effects of macrocyclic lactones in terrestrial and aquatic environments.
428 *Current Pharmaceutical Biotechnology*, **13**, 1004–1060.

429 Luo, L., Sun, Y. & Wu, Y. (2013) Abamectin resistance in Drosophila is related to increased
430 expression of P-glycoprotein via the dEGFR and dAkt pathways. *Insect Biochemistry and*
431 *Molecular Biology*, **43**, 627–634.

432 Martínez M. I., J. P. Lumaret, R. Ortiz Zayas and Nassera Kadiri. 2017. The Effects of Sublethal and
433 Lethal Doses of Ivermectin on the Reproductive Physiology and Larval Development of the
434 Dung Beetle Euoniticellus intermedius. The Canadian Entomologist 149(4):461-472
435 doi:10.4039/tce.2017.11

436 Mazzarri, M.B. & Georghiou, G.P. (1995) Characterization of resistance to organophosphate,
437 carbamate, and pyrethroid insecticides in field populations of Aedes aegypti from Venezuela.
438 *Journal of the American Mosquito Control Association*, **11**, 315–322.

439 Messina, F.J. 1993. Heritability and “evolvability” of fitness components in Callosobruchus
440 maculatus. Heredity (Edinb). 71: 623–629.

441 Meyers, J.I., Gray, M., Kuklinski, W., Johnson, L.B., Snow, C.D., Black, W.C., Partin, K.M. & Foy, B.D.
442 (2015) Characterization of the target of ivermectin, the glutamate-gated chloride channel,
443 from Anopheles gambiae. *Journal of Experimental Biology*, **218**, 1478–1486.

444 Montes de Oca, E. & Halffter, G. (1998) Invasion of Mexico by two dung beetles previously
445 introduced into the United States. *Studies on Neotropical Fauna and Environment*, **33**, 37–45.

446 Nichols, L., Larsen, T.H., Spector, S., Davis, A., Escobar, F., Favila, M.E. & Vulinec, K. (2007) Global
447 dung beetle response to tropical forest modification and fragmentation: a quantitative
448 literature review and meta-analysis. *Biological Conservation*, **137**, 1–19.

449 Osei-Atweneboana, M.Y., Awadzi, K., Attah, S.K., Boakye, D.A., Gyapong, J.O. & Prichard, R.K.
450 (2011) Phenotypic evidence of emerging ivermectin resistance in Onchocerca volvulus. *PLoS*
451 *Neglected Tropical Diseases*, **5**, 1–11.

452 Perez-Cogollo, L.C., Rodriguez-Vivas, R.I., Ramirez-Cruz, G.T. & Miller, R.J. (2010) First report of the
453 cattle tick Rhipicephalus microplus resistant to ivermectin in Mexico. *Veterinary Parasitology*,
454 **168**, 165–169.

455 Pooda, H.S., Rayaisse, J.B., Hien, D.F.D.S., Lefèvre, T., Yerbanga, S.R., Bengaly, Z., Dabiré, R.K.,
456 Belem, A.M.G., Sidibé, I., Solano, P. & Mouline, K. (2015) Administration of ivermectin to
457 peridomestic cattle: A promising approach to target the residual transmission of human
458 malaria. *Malaria Journal*, **14**, 1–12.

459 Price, T. & Schluter, D. 1991. On the low heritability of life-history traits. Evolution (N. Y). 45: 853–
460 861.

461 Puniamoorthy, N., Schäfer, M.A., Römbke, J., Meier, R. & Blanckenhorn, W.U. (2014) Ivermectin
462 sensitivity is an ancient trait affecting all ecdysozoa but shows phylogenetic clustering among

463 sepsid flies. *Evolutionary Applications*, **7**, 548–554.

464 R Development Core Team. (2015) *R: A Language and Environment for Statistical Computing*. R
465 Foundation for Statistical Computing, Austria.

466 Ritz, C., Strebig, J.C. & Ritz, M.C. (2016) Package "drc."

467 Rodríguez-Vivas, R.I., Miller, R.J., Ojeda-Chi, M.M., Rosado-Aguilar, J.A., Trinidad-Martínez, I.C. &
468 Pérez de León, A.A. (2014) Acaricide and ivermectin resistance in a field population of
469 Rhipicephalus microplus (Acari: Ixodidae) collected from red deer (Cervus elaphus) in the
470 Mexican tropics. *Veterinary Parasitology*, **200**, 179–188.

471 Seaman, J.A., Alout, H., Meyers, J.I., Stenglein, M.D., Dabiré, R.K., Lozano-Fuentes, S., Burton, T.A.,
472 Kuklinski, W.S., Black, W.C. & Foy, B.D. (2015) Age and prior blood feeding of Anopheles
473 gambiae influences their susceptibility and gene expression patterns to ivermectin-
474 containing blood meals. *BMC Genomics*, **16**, 1–18.

475 Shoop, W.L. (1993) Ivermectin resistance. *Parasitology Today*, **9**, 154–159.

476 Terada, Y., Murayama, N., Ikemura, H., Morita, T. & Nagata, M. (2010) Sarcoptes scabiei var. canis
477 refractory to ivermectin treatment in two dogs. *Veterinary Dermatology*, **21**, 608–612.

478 Terrill, T.H., Kaplan, R.M., Larsen, M., Samples, O.M., Miller, J.E. & Gelaye, S. (2001) Anthelmintic
479 resistance on goat farms in Georgia: Efficacy of anthelmintics against gastrointestinal
480 nematodes in two selected goat herds. *Veterinary Parasitology*, **97**, 261–268.

481 Verdú, J.R., Cortez, V., Ortiz, A.J., González-Rodríguez, E., Martinez-Pinna, J., Lumaret, J.-P., Lobo,
482 J.M., Numa, C. & Sánchez-Piñero, F. (2015) Low doses of ivermectin cause sensory and
483 locomotor disorders in dung beetles. *Scientific reports*, **5**, 1–10.

484 Wendell, M. D., Wilson, T. G., Higgs, S., & Black IV, W. C. (2000). Chemical and gamma-ray

485 mutagenesis of the white gene in Aedes aegypti. Insect molecular biology, 9(2), 119-125.

486 Wohde, M., Blanckenhorn, W.U., Floate, K.D., Lahr, J., Lumaret, J.P., Römbke, J., Scheffczyk, A.,
487 Tixier, T. & Düring, R.A. (2016) Analysis and dissipation of the antiparasitic agent ivermectin
488 in cattle dung under different field conditions. *Environmental Toxicology and Chemistry*, **35**,
489 1924–1933.

490 Yoon, K.S., Strycharz, J.P., Baek, J.H., Sun, W., Kim, J.H., Kang, J.S., Pittendrigh, B.R., Lee, S.H. &
491 Clark, J.M. (2011) Brief exposures of human body lice to sublethal amounts of ivermectin
492 over-transcribes detoxification genes involved in tolerance. *Insect Molecular Biology*, **20**,
493 687–699.

494 Young, H., Bailey, W. & Roe, R. (2003) Spinosad selection of a laboratory strain of the tobacco
495 budworm, Heliothis virescens (Lepidoptera: Noctuidae),and characterization of resistance.
496 *Crop Protection*, **22**, 265–273.

497 Zuur, A.F., Ieno, E.N., Walker, N.J., Saveliev, A.A. & Smith, G.M. (2009) *Mixed Effects Models and*
498 *Extensions in Ecology with R*. Springer, New York.

499

500

501

502 **Table 1.** Effect of experimental line (Control or IVM) in *Euoniticellus intermedius* dung beetles

503 across 18 generations of exposure. GLM n.b.=negative binomial GLM; GLM q.b.=quasibinomial

504 GLM; Cox p.h.=Cox proportional hazard regression; RD=Residual deviance; X^2=Chi-squared.

505 Significant effects are shown in bold.

	Total brood balls (GLM n.b.)	Emerged beetles (GLM n.b.)	Proportion emerged (GLM q.b.)	Days to first emergence (Cox p.h.)
Generation	**RD=626.07, P=0.027**	**RD=611.1, P<0.001**	**RD=2719.1, P<0.001**	**X^2=186.0, P<0.001**
Line	**RD=618.1, P=0.004**	**RD=596.2, P<0.001**	**RD=2659.1, P=0.004**	**X^2=84.6, P<0.001**
Generation X Line	**RD=593.3, P=0.003**	**RD=579.4, P=0.051**	**RD=2428.0, P<0.001**	**X^2=49.4, P<0.001**

506

507

508 **Table 2.** Effect of experimental line (Control or IVM) and ivermectin treatment (0 [control], 10, 31

509 and 62 µg of ivermectin per kg of fresh dung) in *Euoniticellus intermedius* dung beetles across 18

510 generations of exposure. GLM n.b.=negative binomial GLM; GLM q.b.=quasibinomial GLM; Cox

511 p.h.=Cox proportional hazard regression; RD=Residual deviance; X^2=Chi-squared. Significant effects

512 are shown in bold.

	Total brood balls (GLM n.b.)	Emerged beetles (GLM n.b.)	Proportion emerged (GLM q.b.)	Days to first emergence (Cox p.h.)
Generation	**RD=573.5, P<0.001**	**RD=1037.7, P<0.001**	**RD=5421.8, P<0.001**	**X^2=182.2, P<0.001**
Line	**RD=564.8, P=0.003**	**RD=1020.7, P<0.001**	**RD=5291.2, P<0.001**	**X^2=4.8, P=0.029**
Treatment	RD=561.1, P=0.301	**RD=659.5, P<0.001**	**RD=2871.7, P<0.001**	**X^2=252.2, P<0.001**
Generation X Line	**RD=540.3, P<0.001**	**RD=642.0, P=0.001**	**RD=2728.4, P<0.001**	**X^2=42.1, P<0.001**
Generation X Treatment	**RD=502.7, P<0.001**	**RD=522.4, P<0.001**	**RD=2223.4, P<0.001**	**X^2=89.6, P<0.001**
Line X Treatment	RD=499.7, P=0.392	**RD=485.3, P<0.001**	**RD=2019.8, P<0.001**	X^2=4.8, P=0.189
Generation X Line X Treatment	RD=496.6, P=0.926	**RD=488.8, P=0.036**	**RD=1790.9, P<0.001**	**X^2=38.8, P<0.001**

513

514

515 **Table 3.** Effect of experimental line (Control or IVM) and ivermectin treatment (0 [control], 10, 31
516 and 62 µg of ivermectin per kg of fresh dung) across 18 generations of exposure in *Euoniticellus*
517 *intermedius* dung beetles. GLM n.b.=negative binomial GLM; GLM q.b.=quasibinomial GLM; Cox p.
518 h.=Cox proportional hazard regression; RD=Residual deviance. Significant effects are shown in
519 bold.

Total brood balls (GLM n.b.)	**F1**	**F2**	**F3**	**F6**	**F18**
Line	NS	NS	**P<0.001**	NS	P=0.10
Treatment	NS	**P<0.001**	NS	**P<0.001**	NS
Line X Treatment	NS	NS	NS	NS	NS
Emerged beetles (GLM n.b.)	**F1**	**F2**	**F3**	**F6**	**F18**
Line	NS	NS	**P<0.001**	NS	**P<0.001**
Treatment	NS	**P<0.001**	**P<0.001**	**P<0.001**	**P<0.001**
Line X Treatment	NS	NS	**P<0.001**	NS	**P<0.001**
Proportion emerged (GLM q.b.)	**F1**	**F2**	**F3**	**F6**	**F18**
Line	**P=0.027**	**P<0.001**	**P=0.010**	**P=0.032**	**P<0.001**
Treatment	NS	P=0.145	**P<0.001**	**P<0.001**	**P<0.001**
Line X Treatment	NS	**P<0.001**	**P<0.001**	NS	**P<0.001**
Days to first emergence (Cox p.h.)	**F1**	**F2**	**F3**	**F6**	**F18**
Line	P=0.175	P=0.167	**P<0.001**	**P=0.023**	P=0.220
Treatment	**P<0.001**	P=0.744	**P<0.001**	**P<0.001**	**P<0.001**
Line X Treatment	**P=0.037**	**P=0.012**	**P<0.001**	P=0.167	P=0.055

520

521

522 **Figure 1.** Experimental design to test for ivermectin resistance in *Euoniticellus intermedius* dung
523 beetles across 18 generations of exposure. Field-caught beetles were reproduced in the laboratory
524 for one generation in ivermectin-free dung before starting two experimental lines (F0), one
525 exposed to ivermectin (IVM line, 10 µg of ivermectin per kg of fresh dung) and the free of
526 ivermectin (Control line) until F18. In generations F1, F2, F3, F6 and F18 we performed toxicity
527 experiments to evaluate dung beetle performance at different ivermectin concentrations (IVM10,
528 IVM31 and IVM62, corresponding to 10, 31 and 62 µg of ivermectin per kg of fresh dung). For each
529 line, generation and toxicity experiment (except for the selection lines in the F6) we quantified the
530 number of brood masses produced per couple, the number of emerged beetles, the proportion of
531 emerged beetles and days to emergence. In F18, five couples of emerged beetles from treatment
532 IVM62 were exposed to IVM62 treatment to evaluate the same variables. Sample sizes are given in
533 Figure 2.

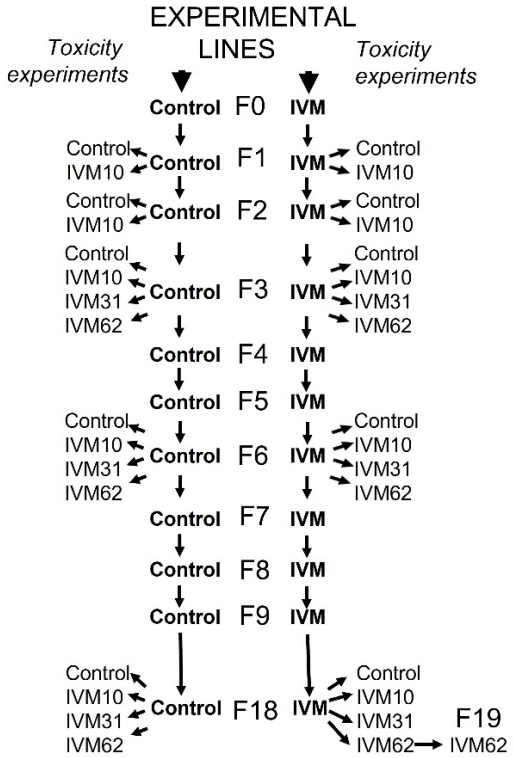

534

535 **Figure 2.** Effect of experimental line (Control or IVM) across 18 generations of exposure in

536 *Euoniticellus intermedius* dung beetles. Sample sizes are the same for figures a, b and c and get

537 reduced in the analysis of days to emergence, as there were nests where no beetles emerged

538 (figure d). Numbers next to the bars represent the numbers of analyzed couples.

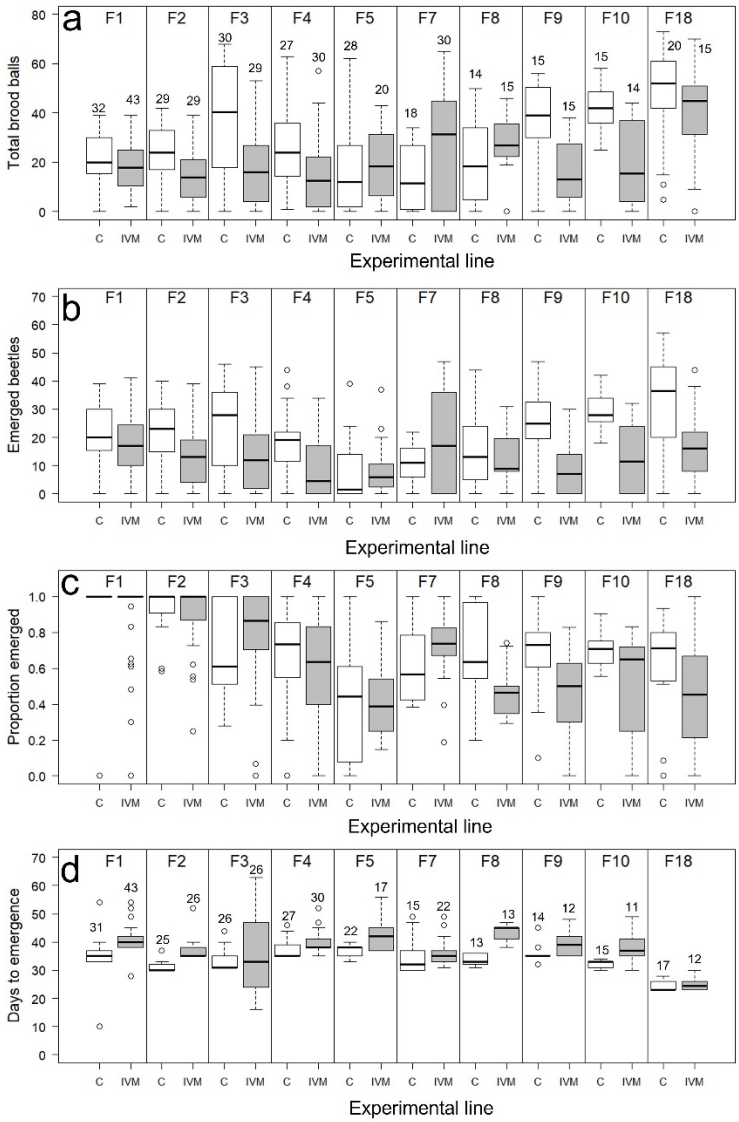

539

540 **Figure 3.** Effect of experimental line (Control or IVM) and ivermectin treatment (0 [control], 10, 31
541 and 62 µg of ivermectin per kg of fresh dung) across 18 generations of exposure in *Euoniticellus*
542 *intermedius* dung beetles from toxicity experiments. Sample sizes are the same for figures a, b and
543 c and get reduced in the analysis of days to emergence, as there were nests where no beetles
544 emerged (figure d). Numbers next to the bars represent the numbers of analyzed couples.
545 *Represents treatments where there were no emerged beetles and were not considered for the
546 analyses of days to emergence.

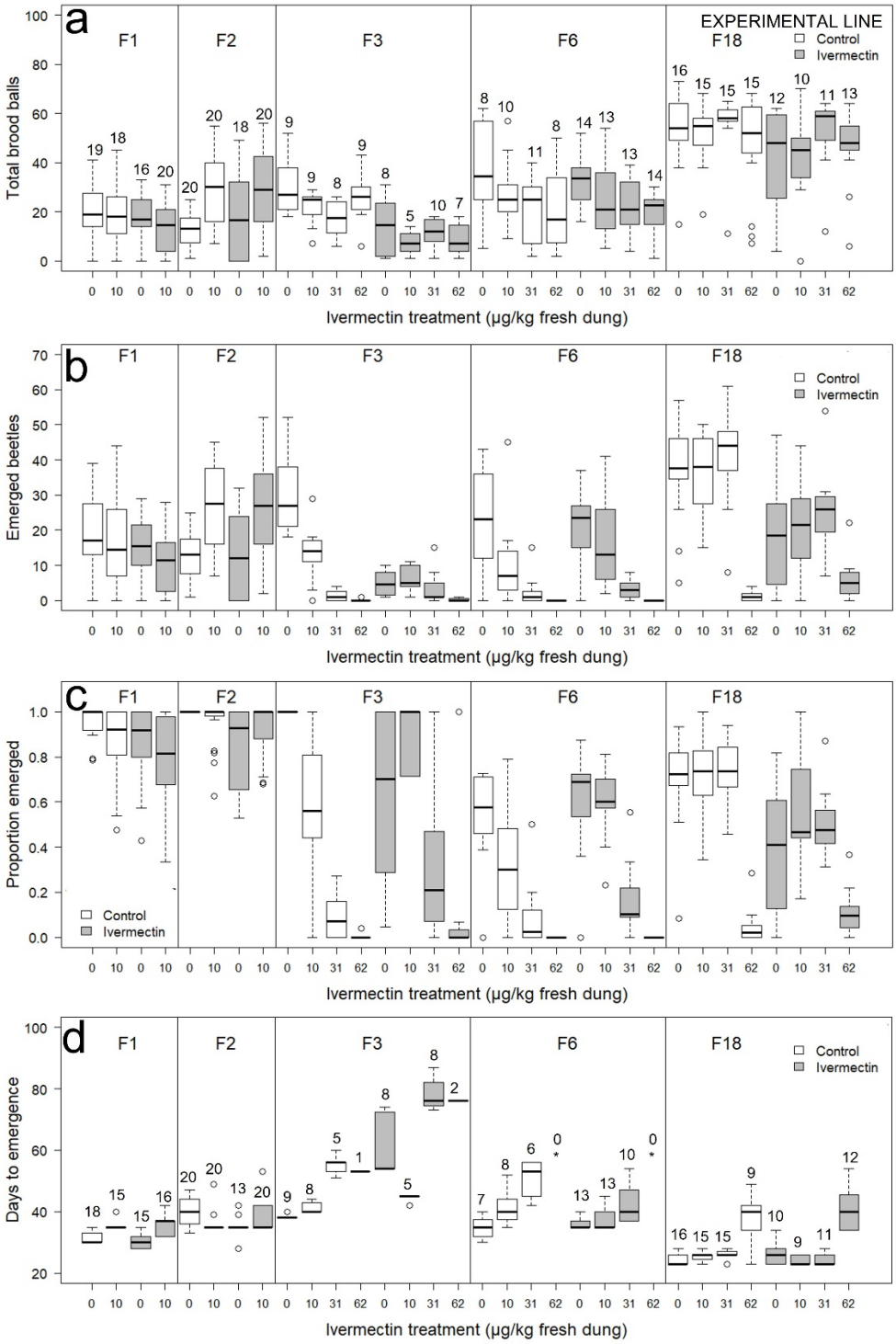
a
EXPERIMENTAL LINE
F1
F2
F3
F6
F18
Control
Ivermectin
Total brood balls
Ivermectin treatment (µg/kg fresh dung)
b
Emerged beetles
Ivermectin treatment (µg/kg fresh dung)
c
Proportion emerged
Ivermectin treatment (µg/kg fresh dung)
d
Days to emergence
Ivermectin treatment (µg/kg fresh dung)

547