Ivermectin resistance in dung beetles exposed for multiple generations

Daniel González-Tokman[a*], Antonio Arellano-Torres[a], Fernanda Baena-Díaz[a], Carlos Bustos-Segura[b], Imelda Martínez M.[a]

[a]Red de Ecoetología, Instituto de Ecología, A. C. Carretera antigua a Coatepec 351. El Haya, Xalapa, Veracruz. Mexico. 91073

[b]Laboratory of Fundamental and Applied Research in Chemical Ecology, Institute of Biology, University of Neuchâtel, 2000 Neuchâtel, Switzerland

*Corresponding author: daniel.gt@inecol.mx

Abstract

Ivermectin is an antiparasitic drug commonly used in cattle, that is excreted in dung, causing lethal and sub-lethal effects on coprophagous non-target fauna. Given that cattle parasites generate resistance to ivermectin, farmers have increased the used doses, with a consequent threat to wild fauna. The dung beetle species *Euoniticellus intermedius* provides ecosystem services by burying dung in cattle pastures, however it is highly threatened by ivermectin. Here we experimentally tested whether *E. intermedius* generates resistance against ivermectin after being exposed for several generations to a sublethal dose. We generated two laboratory lines where beetles were exposed to either ivermectin-treated or ivermectin-free dung for 18 generations. We compared reproductive success (total brood balls, emerged beetles, proportion emerged and days to emergence) of beetles from both lines across generations. Additionally, for each line, we carried-out toxicity experiments with increasing ivermectin concentrations to determine if sensitivity to ivermectin was reduced after some generations of exposure (i. e. if beetles acquired ivermectin resistance by means of transgenerational effects). Our results show that dung beetles do not generate resistance to ivermectin after 18 generations of continuous exposure and quantitative genetic analyses show low genetic variation in response to ivermectin across generations. Together, these results indicate low potential for adaptation to the contaminant in the short term. Although we cannot exclude that adaptation could occur in the long term, our results and comparative evidence in other insects indicate that dung beetles, and probably other species, are at risk of extinction in ivermectin-contaminated pastures unless they are pre-adapted to tolerate high ivermectin concentrations.

Keywords: antiparasitic, experimental evolution, pesticide resistance, Scarabaeinae

36 **Introduction**

37

38 Ivermectin is one of the most common antiparasitic drugs used in livestock worldwide (Laing,
39 Gillan & Devaney 2017). It is effective against nematodes and arthropod parasites of humans,
40 cattle and pets and it has even been called a 'wonder drug' for its broad spectrum of parasite
41 control and low toxicity for humans (Geary 2005). However, residues of ivermectin are excreted
42 intact in cattle dung and remain active for up to several months in cattle pastures, during which
43 they stay biologically active and threaten non-target coprophagous organisms such as dung flies
44 and beetles (Lumaret *et al.* 2012; Wohde *et al.* 2016). This creates an ecological and economic
45 problem, as coprophagous organisms bury and degrade dung in pastures, helping to maintain soil
46 fertility and eliminating noxious fauna that otherwise would cause livestock disease (Nichols *et al.*
47 2007). In addition, the economic value of dung beetles in cattle pastures is calculated in up to
48 $423 USD per cow and, therefore, their conservation is urgent to preserve their ecosystem
49 services (Lopez-Collado *et al.* 2017).

50 Ivermectin in dung reduces the emergence of dung flies and beetles and the most susceptible
51 stages are larvae rather than adults (Lumaret *et al.* 2012). Ivermectin use can be the main threat
52 (besides habitat loss) for dung beetle diversity in cattle pastures, even more than the intensity of
53 farming or the degree of forest fragmentation in the surrounding landscape (Alvarado *et al.* 2017).
54 Ivermectin-treated insects, particularly dung flies and beetles, produce less offspring (Lumaret *et*
55 *al.* 2012; Blanckenhorn *et al.* 2013; González-Tokman *et al.* 2017) and offspring with reproductive
56 disadvantages such as smaller body size or reduced sexual traits (González-Tokman et al. 2017;
57 Baena-Díaz *et al.* 2018). As ivermectin is slowly excreted in treated cattle, low doses have
58 sublethal effects on the physiology and fitness of dung feeding insects (Verdú *et al.* 2015;

González-Tokman *et al.* 2017; Martínez et al. 2017) that even persist across generations (Baena-Díaz *et al.* 2018; Conforti *et al.* 2018). This issue gets more challenging as ivermectin resistance has been reported for several parasites, including nematodes (Shoop 1993; Dent *et al.* 2000; Terrill *et al.* 2001; Kaplan 2004; Osei-Atweneboana *et al.* 2011), mites (Currie *et al.* 2004; Perez-Cogollo *et al.* 2010; Castro-Janer *et al.* 2011; Rodríguez-Vivas *et al.* 2014) and insects (Byford *et al.* 1999), leading farmers to increase the used doses to control livestock parasites.

In arthropods, ivermectin resistance has been observed in some parasitic mites such as *Boophilus microplus* (Benavides & Romero 2000), *Sarcoptes scabiei* (Currie *et al.* 2004; Terada *et al.* 2010) and *Rhipicephalus microplus* (Perez-Cogollo *et al.* 2010). In insects, the evidence of ivermectin resistance is scarce and limited to hematophagous parasitic horn flies (*Haematobia irritans*), that become ca. 3-fold resistant after 23 generations and 6-fold resistant after 50 generations (Byford *et al.* 1999). In *Drosophila melanogaster* flies and *Aedes aegyptii* mosquitoes, resistance to ivermectin is achieved after exposure to other insecticides, revealing cross-resistance (Kane *et al.* 2000; Deus *et al.* 2012). Despite ivermectin resistance occurs, it seems to take longer and be less effective than resistance to insecticides or other antiparasitic drugs, as in *Haematobia irritans* flies, where the magnitude of the resistance was 3-fold with ivermectin to 1470-fold with the insecticide permethrin (Byford *et al.* 1999), probably because of the different physiological mechanisms involved in resistance against different drugs (Kane *et al.* 2000; Seaman *et al.* 2015).

Here we tested for the possibility that dung beetles also generate resistance to ivermectin after being exposed for several generations. To evaluate this idea, we performed an experiment where we exposed a line of beetles to a moderate concentration of ivermectin during 18 generations. In parallel, we grew a control line of beetles that was maintained free of ivermectin for 18 generations. Across generations, we performed toxicity experiments in both lines to test for the effect of increasing ivermectin concentrations on offspring emergence and developmental time.

Toxicity experiments allowed to calculate the lethal concentration 50 (LC50) of ivermectin in both lines. By controlling for genetic relatedness between experimental beetles, we also estimated heritability and genetic variation in ivermectin resistance. We predicted: (1) that beetles in the ivermectin exposed line would tend to increase fitness in contaminated dung across generations; (2) that beetles in the ivermectin exposed line, compared to the control line, would show better performance when exposed to increasing ivermectin concentrations, (3) that resistance ratios would increase in the ivermectin exposed line and (4) that there are genetic variation and heritability in ivermectin responses. If these predictions are met, they would indicate that beetles generate resistance to ivermectin after several generations of exposure, giving promising insights regarding parasite management in contaminated pastures. Otherwise, the use of ivermectin would condemn the studied dung beetles to disappear from contaminated pastures.

Materials and methods

The present study was carried out with the dung beetle *Euoniticellus intermedius* (Coleoptera: Scarabaeinae), which is one of the most fecund species of its subfamily, with a relatively short generation time of ca. four weeks (Martínez et al. 2019). This beetle is native from Africa but was introduced to remove dung from cattle pastures in the United States in the 1970's and has migrated southwards; despite not being reported as invasive (Del Val et al. 2017), now it is one of the most abundant species in Mexican cattle pastures (Montes de Oca & Halffter 1998) and is particularly threatened by ivermectin since it shows attraction for contaminated dung (Holter, Sommer & Gronvold 1993).

105 Beetles were collected in San Román ranch, Medellín, Veracruz, Mexico (18°58’19.37” N,
106 96°04’51.43’’ W; 42 asl) in July 2017. The owners of the ranch report that they do not use
107 ivermectin to control cattle parasites. To start the experiment, we collected 151 females and 100
108 males and transported them to the laboratory, where the rest of the study was carried-out under
109 insectary conditions (27 ± 1.8 °C; 80% mean humidity). For logistic reasons, beetles were fed cattle
110 dung collected in Palo Alto ranch, Acajete, Veracruz, Mexico (19°35’29.1" N, 97°00’05.5”W), where
111 ranch owners also do not use ivermectin. Before feeding the beetles, dung (80-82% humidity) was
112 frozen for at least 48 h at -22°C to eliminate parasites. Collected beetles were reproduced over
113 two weeks in five containers to obtain a first generation of beetles, known to be free of ivermectin
114 for at least one generation.

115 Starting in the F1, newly emerged beetles were maintained in randomly formed pairs of a male
116 and a female in 1L plastic containers filled with ca. 700 mL moisted, sterilized sifted soil as
117 substrate. The number of used couples (range 13-43 couples per studied line and generation;
118 Figure 2a) depended on the number and timing of beetle emergences. Each pair could reproduce
119 for three weeks (with ivermectin-treated or control dung; see below). After that time the male and
120 the female were removed, and the number of offspring emerged from each container were
121 recorded. We also recorded the number of larvae that did not emerge from brood balls to have a
122 measurement of female fertility and the time from the pair formation to the emergence of the
123 first offspring, as a measurement of developmental time. To avoid inbreeding, siblings were never
124 crossed with each other. Pairs where the male or the female died before a week were not
125 considered for the analyses.

126

127 *Experimental lines*

128 In this experiment (Figure 1) we generated two lines of beetles, one that developed 18
129 generations in ivermectin (IVM line) and a parallel, not-exposed line (Control line), that developed
130 free of ivermectin during the same 18 generations. Ivermectin acts on invertebrate cell
131 membranes, specifically in glutamate-gated chloride channels, increasing permeability to chloride
132 ions, leading to cell hyperpolarization (Kane *et al.* 2000; Meyers *et al.* 2015). Given that it acts in
133 neurons and muscular cells, it causes paralysis, inhibition of feeding and reproduction, and death
134 (Laing *et al.* 2017).

135 The experimental treatments were spiked in defrosted dung, which was provided to the beetles
136 three times per week (see similar procedures in (Blanckenhorn *et al.* 2013)). In the treated line
137 (IVM line), beetles from F1-F18 were exposed to ivermectin in the dung (10 µg of ivermectin per kg
138 of fresh dung; Ivermectin, CAS-Number 70288-86-7 Purity of ≥90% ivermectin B1a and ≤5%
139 ivermectin B1b, Sigma-18898). Given that ivermectin was diluted in 50 mL acetone per kg of dung,
140 acetone (CAS-Number 1567-89-1; Sigma purity >99.8%) was used as treatment in the Control line
141 (50 mL per kg of fresh dung). The used ivermectin dose in the IVM line was chosen for being
142 realistic, as it falls in the range of ivermectin excreted by treated cattle after four weeks (Wohde et
143 al. 2016). This dose is considered moderate, as in some populations of *E. intermedius* it has shown
144 to reduce emergence by 50% (Baena-Díaz *et al.* 2018) but in other population it did not affect
145 beetle emergence or physiological condition (González-Tokman *et al.* 2017). As expected, in the
146 present study, the treatment used in the IVM line acted as a moderate selection pressure (see
147 results). In generations F6 and F11-F17 we were not able to register emerged beetles in the IVM
148 lines, so these generations were not considered for statistical analyses, although emerged
149 individuals were used to form the subsequent generations. Generations F11-F17 were maintained
150 in three large terraria per line, containing 20 couples per line but we were not able to monitor the
151 reproductive success in experimental lines, so we just maintained the IVM lines without

152 registering the number of brood balls or emerged beetles. Unexpectedly, in F13 high mortality in
153 both lines left only 12 couples in the IVM line. The Control line in F13 suffered even higher
154 mortality leaving only four females and a male. Therefore, we put together the laboratory
155 population of this particular line with 10 new males and 10 females that had spent a generation in
156 the insectarium feeding control dung in a large terrarium. Both lines got recovered the next
157 generation and 20 couples were formed again for each line. This did not cause any evident effect
158 in the next (and last) evaluated generation (F18), where the Control line maintained similar trends
159 in offspring emergency as past generations (see results).
160
161 *Toxicity experiments*
162
163 From a subset of beetles emerged from both lines (in F1, F2, F3, F6 and F18), we carried out
164 toxicity experiments to evaluate the effect of increasing concentrations of ivermectin (Figure 1). By
165 doing this, we could determine whether individuals from the IVM line (compared to the Control
166 line) became resistant to ivermectin across generations. In F1 and F2, the toxicity experiment
167 consisted of two treatments: ivermectin (10 µg of ivermectin per kg of fresh dung) and control
168 (acetone). In F3, F6 and F18, the toxicity experiment consisted in four treatments with increasing
169 concentrations of ivermectin (10, 31 and 62 µg of ivermectin per kg of fresh dung) plus a control
170 treatment (acetone). These new concentrations (IVM31 and IVM62) are considered high, as they
171 reduce emergence of *E. intermedius* three to four times (particularly females) and body size and
172 muscular mass in both males and females (González-Tokman *et al.* 2017). Moreover, the used
173 ivermectin treatments represent realistic concentrations found in dung of cattle treated 2-4 weeks
174 earlier with the recommended dose (500 µg of ivermectin per kg of cattle body mass (Wohde *et al.*
175 2016)). As an additional experiment, five couples emerged from IVM62 in F18 were exposed to the

176 same ivermectin concentration (62 µg of ivermectin per kg of fresh dung), but not a single
177 individual emerged in the new generation, which was not considered for statistical analyses.
178 Sample sizes for each generation, line and treatment are shown in Figure 3a. Again, when the male
179 or the female died before a week, the pair was excluded from the analyses. We also estimated the
180 broad sense heritability of reproductive traits using parent-offspring regressions.
181

182 *Statistical analyses*

183 Analyses were done according to (Zuur *et al.* 2009; Crawley 2013) in R program (R Development
184 Core Team 2015) (Sup Mat Script 1). To compare the effect of treatment (Control or IVM) across
185 generations, we carried out generalized linear models (GLM) to analyze the total number of brood
186 balls, the number of emerged beetles, the proportion of emerged beetles and the developmental
187 time. For doing so, the used statistical models included the following predictors as factors:
188 Generation, Line and the interaction Generation X Line. The number of brood balls and the
189 number of emerged beetles were analyzed with a GLM with negative binomial errors (given the
190 high overdispersion found for the models with Poisson errors). The proportion of emerged beetles
191 (number of emerged beetles / total number of brood balls) was analyzed with a GLM with
192 quasibinomial errors (given the high overdispersion found for the model with binomial errors).
193 Differences in the number of days to the first emergence were analyzed with a Cox proportional
194 hazards model.

195 In the toxicity experiments, where different concentrations of ivermectin were tested in F1, F2, F3,
196 F6 and F18, the statistical models also tested the effect of treatment and the triple interaction
197 Generation X Line X Treatment. Given that the triple interaction was significant in most analyses
198 (Table 2), we carried out separate analyses for each generation. These new analyses initially tested

199 the effect of Line, Treatment and the interaction Line X Treatment. The original models were
200 reduced based on the Akaike Information Criterion (AIC, for the case of total number of brood
201 balls and number of emerged beetles) and step by step (removing non-significant terms) for the
202 proportion of emerged beetles and time to the first emergence (as AIC is not available for
203 quasibinomial GLMs or Cox proportional hazards models).

204 In toxicity experiments of F3, F6 and F18, where we tested several ivermectin concentrations, we
205 estimated ivermectin LC50 for Control and IVM lines with logit analyses in R package ecotox (Hlina
206 2020). Resistance ratios (RR), were estimated in F3, F6 and F18 as LC50 in the IVM line / LC50 in
207 the Control line (Mazzarri & Georghiou 1995). Values of RR larger than 3 are considered resistance
208 and values from 1.5-3 are considered tolerance rather than resistance (Byford *et al.* 1999).

209 We performed parent-offspring regressions (Sup Mat Script 2) to estimate the broad sense
210 heritability of number of brood balls, number of emerged beetles, proportion of emerged beetles
211 and days to first emergence. We performed separate regressions for daughters and sons, using the
212 values of each couple as the parental value (explanatory variable) and the values of the respective
213 couple for daughters and sons as the offspring values (response variable). The coefficient estimate
214 for the parental value was taken as the broad sense heritability (Falconer & Mackay 1996) and its
215 standard error was used to calculate the statistical significance with a z ratio test. A positive
216 significant slope would indicate a significant contribution of genetic variation to the total
217 phenotypic variation of each trait. The regressions were run using a linear model with normal
218 error distribution, including line and generation as covariates. The interactions between line and
219 parental traits were also tested but excluded from final models since they did not explain the
220 observed variation. The proportion of emerged beetles was logit transformed to improve
221 normality. Used datasets are in Sup Mat 1, Sup Mat 2, Sup Mat 3, Sup Mat 4 and Sup Mat 5.

222 **Results**

223

224 *Euoniticellus intermedius* dung beetles did not improve performance in ivermectin-contaminated
225 dung after being exposed for 18 generations to a moderate concentration of the contaminant
226 (Figures 2 and 3). The effects of Line, Generation and the interaction Line X Generation were
227 significant for most analyzed variables (Table 1), but beetles from the exposed line (IVM) did not
228 improve performance (mainly number of emerged beetles but also total brood balls, proportion of
229 emerged beetles and developmental time) in contaminated dung across generations (Figure 2).
230 Moreover, in the last three monitored generations (F9, F10 and F18), the negative effect of the
231 experimental line on the number of emerged beetles was more evident than in earlier generations
232 (Figure 2b).

233 Toxicity experiments carried out in generations F1, F2, F3, F6 and F18 confirmed that the negative
234 effect of ivermectin is not reduced after 18 generations. This was observed as beetles from the
235 IVM line did not improve performance (mainly number of emerged beetles but also total brood
236 balls and proportion of emerged beetles) in contaminated dung across generations or when
237 compared to beetles in the Control line (Figure 3; Tables 2 and 3). The significant statistical
238 interaction Line X Treatment (Table 2) showed that differences between beetles from the IVM and
239 control lines changed across generations. However, these interactions did not show a consistent
240 improvement in the performance of beetles from IVM line compared to the Control line in either
241 the same or higher ivermectin concentrations (Figure 3). For example, such a trend was observed
242 in the proportion of emerged beetles in F6 but not in F18 (Table 2; Figure 3c). Also, in F3 the
243 number of emerged beetles in the IVM line was consistently lower than in the Control line.
244 Notably, even in the highest ivermectin concentration (62 µg of ivermectin per kg of fresh dung),

245 beetles from both lines built as many brood balls as those in the lowest concentration (Figure 3a),
246 although such balls rarely emerged (Figure 3c). A different pattern was observed in F18, where the
247 number of emerged beetles was surprisingly high at the highest ivermectin concentration in the
248 IVM line, and was even higher than in the same treatment from the Control line.

249 However, when analyzing ivermectin lethality, ivermectin resistance ratios (RR) indicated lack of
250 resistance and only small tolerance to the contaminant in generation F3, as LC50 of ivermectin in
251 the IVM line was 1.72 times higher than in the Control line (LC50=21.0 versus 12.2 μg of ivermectin
252 per kg of fresh dung; RR=1.72; Figure 3c). However, the RR>1 found in the F3 is mainly explained
253 by the fact that unexposed individuals from the IVM line emerged in very low numbers in this
254 generation (5-6-fold less than unexposed individuals in the Control line) and not because of
255 improved reproductive success at high ivermectin concentrations (Figure 3b). Also, resistance was
256 low in the F6, as the RR was only 1.65 (LC50=13.5 versus 8.2 μg of ivermectin per kg of fresh dung
257 in IVM and Control lines, respectively). In F6, unexposed individuals from both lines emerged in
258 similar numbers but individuals exposed to 10 and 31 μg/kg in the IVM line had higher proportion
259 of emerged offspring than exposed individuals from the Control line, indicating some tolerance.
260 Finally, in the F18, resistance was not evident at all, as RR= 0.56 (LC50=15.2 versus 27.3 μg of
261 ivermectin per kg of fresh dung in IVM and Control lines, respectively). Development times also
262 did not improve significantly in exposed beetles from the IVM line across generations or when
263 compared with the Control line (Tables 1 and 2; Figure 3d).

264 The parent-offspring regressions were not significant for the number of brood balls, number of
265 emerged beetles, proportion of emerged beetles and days to first emergence, indicating that
266 genetic variation does not explain the phenotypic variance for those traits in the studied dung
267 beetles (Table S1).

Discussion

In the present study we show that dung beetles *Euoniticellus intermedius* do not improve performance in ivermectin after 18 generations of exposure and that genetic variation does not explain variation in the observed responses, contrary to our four predictions. Beetles growing in ivermectin during 18 generations did not improve reproductive success in contaminated dung across generations. Moreover, the last three studied generations were more severely affected by ivermectin than earlier generations, indicating an amplification of adverse effects of ivermectin across generations on the measured traits. Also, beetles exposed for 18 generations to a low ivermectin dose did not improve performance at higher concentrations, as observed by low resistance ratios, which were even <1 in F18. Therefore, descending from a genetic line that has been exposed to ivermectin for 18 generations not only does not improve performance in contaminated dung, but also may have considerable negative effects in non-contaminated food, as observed by the lower reproductive success in unexposed individuals of IVM than Control line. Our evaluation of ten generations with controlled kinship showed that reproductive traits are hardly heritable, which can explain the observed patterns of lack of resistance. These findings give a pessimistic scenario for dung beetles in ivermectin-contaminated pastures around the world, as ivermectin-treated cows excrete, during the first 28 days post-treatment, contaminated dung with doses that are highly lethal for our studied beetles (i. e. higher than 10 μg of ivermectin per kg of fresh dung) (Wohde *et al.* 2016; González-Tokman *et al.* 2017). It is also plausible that higher doses might increase the selective pressure of ivermectin, facilitating evolution, but this possibility remains to be tested. Our results highlight the need for multigenerational assessments of ivermectin effects in non-target fauna in contaminated pastures.

291 Ivermectin resistance has been studied in parasitic nematodes, parasitic ticks and only one
292 parasitic insect. In nematodes, three generations are enough to generate resistance to ivermectin
293 (Coles, Rhodes & Wolstenholme 2005) whereas in mites *Sarcoptes scabiei*, ivermectin resistance
294 has been reported after 30 and 58 exposure events (i. e. generations) (Currie *et al.* 2004). In horn
295 flies *Haematobia irritans* (Diptera: Muscidae), the only insects studied for ivermectin resistance, 3-
296 fold resistance is detected after 23 generations and reaches 6-fold after 60 generations (Byford *et*
297 *al.* 1999). Our study was carried out for 18 generations across 22 months in the laboratory. Even
298 though we cannot discard that resistance could improve after more generations, as shown in horn
299 flies after 23 generations, we did not detect any trend in that direction. Moreover, individuals in
300 the ivermectin-exposed line did not perform better in ivermectin when exposed to moderate and
301 high ivermectin concentrations (31 and 62 µg/kg; Figure 3b). Unlike parasites, which are highly
302 combatted with antiparasitic drugs and therefore they are permanently exposed to these drugs,
303 non-target organisms such as dung beetles may face intermittent exposure to the contaminant,
304 threatening some but not all generations. We also cannot discard that the observed reductions in
305 the number of emerged beetles in some of our studied generations has resulted from potential
306 deleterious effects of ivermectin eroding genetic diversity and causing genetic drift, thus
307 preventing dung beetle adaptation to ivermectin.

308 Pesticide resistance in insects may be provided by different physiological mechanisms. For
309 example, mutations in glutathione transferases, a family of antioxidant enzymes involved in
310 detoxification and elimination of free radicals, provide insect resistance to DDT, organophosphates
311 and pyrethroids (Enayati, Ranson & Hemingway 2005). In the case of ivermectin, evidence in lice
312 show that lice exposed to a sublethal concentration become more tolerant to a lethal dose later in
313 their lives (Yoon *et al.* 2011); the increased survival is associated to the overexpression of
314 detoxification genes involved in the metabolism of ivermectin. In *Anopheles gambiae* mosquitoes

315 exposed to ivermectin, mechanisms of resistance are associated with the overexpression of
316 immune-response genes (Seaman *et al.* 2015). In the fruit fly *Drosophila melanogaster*, ivermectin
317 resistance is acquired by individuals selected for another antiparasitic drug (nodulisporic acid), and
318 this crossed-resistance is given by glutamate-gated chloride channels (Kane *et al.* 2000). In fruit
319 flies resistant to another macrocyclic lactone, abamectin, resistance is given by overexpression of
320 P-glycoprotein, a transmembrane ATP-dependent drug efflux pump (Luo, Sun & Wu 2013). The
321 extent to which these mechanisms may favor adaptation to ivermectin in dung beetles remains to
322 be studied.

323 Our quantitative genetic analyses show low genetic variation for ivermectin response, indicating
324 low potential for adaptation to ivermectin in the studied dung beetles, as previously reported in
325 dung flies (González-Tokman et al. 2022). Nevertheless, pesticide resistance can evolve by
326 different means, which we cannot discard. First, standing genetic variation may provide resistance
327 prior to the existence of the pesticide (Hawkins *et al.* 2019), and several generations of exposure
328 could make evident favorable combinations. Further studies in *E. intermedius* populations within
329 its native range, where higher genetic variation is expected, would indicate if some genetic
330 variants and combinations can generate more resistant phenotypes. As a second mechanism of
331 evolution, *de novo* mutations could increase resistance due to random processes (Hawkins *et al.*
332 2019), and this could be explored in experimental lines exposed to higher mutation rates (i. e.
333 Wendell et al. 2000). The present experimental evidence also shows that phenotypic plasticity and
334 transgenerational effects are not providing any survival or reproductive benefit, as individuals
335 growing up in ivermectin, and their offspring, did not perform better when consistently exposed to
336 the contaminant. This contrasts with previous studies showing high plasticity in response to
337 ivermectin (González-Tokman et al. 2022) and parental effects (Baena-Díaz et al. 2018) affecting
338 subsequent generations of ivermectin-exposed insects. However, the low observed heritability of

339 the measured traits indicates low evolutionary potential in response to ivermectin. Fast evolution
340 could be experimentally evaluated with artificial selection experiments, where only the fittest
341 genotypes contribute to the next generation, or with the use of IVM doses that are higher than the
342 LC50.

343 Our studied dung beetle, *E. intermedius*, is highly adaptable to new environmental conditions and
344 has colonized several habitats in different continents, probably due to the high female fecundity,
345 high reproductive rate and short developmental time compared to related species of dung beetles
346 (Montes de Oca & Halffter 1998). Even with such high adaptive and invasive potential, this beetle
347 could not improve performance or generate resistance against low doses of ivermectin after 18
348 generations of exposure in the laboratory. Considering that the study site is dominated by cattle
349 pastures and approximately half of the farmers use ivermectin (González-Gómez et al. 2018),
350 other species of dung beetles with lower reproductive potential and longer developmental times,
351 will hardly become resistant to ivermectin, unless pre-adaptation, standing variation or random
352 mutation provide protection (Hawkins *et al.* 2019). Further studies in other species of dung-
353 degrading organisms, including native dung beetles, are needed to know if some species will
354 develop ivermectin resistance and can still contribute to dung degradation and soil fertilization in
355 ivermectin-contaminated pastures. This is particularly true as ivermectin sensitivity is highly
356 clustered phylogenetically, with different species within a genus varying up to 500 times in
357 sensitivity to ivermectin (Puniamoorthy *et al.* 2014).

358 The effectiveness of ivermectin has led to use it as a prophylactic treatment applied massively in
359 humans for controlling malaria-transmitting mosquitoes (Alout *et al.* 2014). However, it is of
360 current concern whether these mosquitoes will also generate resistance against ivermectin (Pooda
361 *et al.* 2015). Further studies in target and non-target arthropods are needed to evaluate the

genetic and physiological mechanisms of ivermectin resistance and the extent to which different arthropod species generate resistance to ivermectin.

Acknowledgements

The authors thank Yorleny Gil Pérez, Ana Kory Martínez Diego and Ricardo Madrigal Chavero for logistic and technical support. FBD is supported by a postdoctoral fellowship CONACYT . This study was funded by CONACYT Ciencia Básica project number 257894 granted to DGT.

References

Alout, H., Krajacich, B.J., Meyers, J.I., Grubaugh, N.D., Brackney, D.E., Kobylinski, K.C., Diclaro, J.W., Bolay, F.K., Fakoli, L.S., Diabaté, A., Dabiré, R.K., Bougma, R.W. & Foy, B.D. (2014) Evaluation of ivermectin mass drug administration for malaria transmission control across different West African environments. *Malaria Journal*, **13**, 1–10.

Alvarado, F., Escobar, F., Williams, D.R., Arroyo-Rodríguez, V. & Escobar-Hernández, F. (2017) The role of livestock intensification and landscape structure in maintaining tropical biodiversity. *Journal of Applied Ecology*, **55**, 185–194.

Baena-Díaz, F., Martínez-M, I., Gil-Pérez, Y. & González-Tokman, D. (2018) Trans-generational effects of ivermectin exposure in dung beetles. *Chemosphere*, **202**, 637–643.

Benavides, E. & Romero, A. (2000) Preliminary results of a larval resistance test to ivermectins

383 using Boophilus microplus reference strains. *Annals of the New York Academy of Sciences*,
384 **916**, 610–2.

385 Blanckenhorn, W.U., Puniamoorthy, N., Schäfer, M.A. & Scheffczyk, A. (2013) Standardized
386 laboratory tests with 21 species of temperate and tropical sepsid flies confirm their suitability
387 as bioassays of pharmaceutical residues (ivermectin) in cattle dung. *Ecotoxicology and*
388 *Environmental Safety*, **89**, 21–28.

389 Byford, R.L., Craig, M.E., DeRouen, S.M., Kimball, M.D., Morrison, D.G., Wyatt, W.E. & Foil, L.D.
390 (1999) Influence of permethrin, diazinon and ivermectin treatments on insecticide resistance
391 in the horn fly (Diptera: Muscidae). *International Journal for Parasitology*, **29**, 125–135.

392 Castro-Janer, E., Rifran, L., González, P., Niell, C., Piaggio, J., Gil, A. & Schumaker, T.T.S. (2011)
393 Determination of the susceptibility of Rhipicephalus (Boophilus) microplus (Acari: Ixodidae)
394 to ivermectin and fipronil by Larval Immersion Test (LIT) in Uruguay. *Veterinary Parasitology*,
395 **178**, 148–155.

396 Coles, G.C., Rhodes, A.C. & Wolstenholme, A.J. (2005) Rapid selection for ivermectin resistance in
397 Haemonchus contortus. *Veterinary Parasitology*, **129**, 345–347.

398 Conforti, S., Dietrich, J., Kuhn, T., Koppenhagen, N. van, Baur, J., Rohner, P.T., Blanckenhorn, W.U.
399 & Schäfer, M.A. (2018) Comparative effects of the parasiticide ivermectin on survival and
400 reproduction of adult sepsid flies. *Ecotoxicology and Environmental Safety*, **163**, 215–222.

401 Crawley, M.J. (2013) *The R Book*, 2nd ed. Wiley, West Sussex.

402 Currie, B.J., Harumal, P., McKinnon, M. & Walton, S.F. (2004) First documentation of in vivo and in
403 vitro ivermectin resistance in Sarcoptes scabiei. *Clinical Infectious Diseases*, **39**, e8–e12.

404 Del-Val, E., Martínez, J. P., & Lozada, A. B. (2017). Artrópodos exóticos en México: impactos en

405 producción, biodiversidad y salud. Folia Entomológica Mexicana (nueva serie), 3(2), 70-91.

406 Dent, J.A., Smith, M.M., Vassilatis, D.K. & Avery, L. (2000) The genetics of ivermectin resistance in
407 Caenorhabditis elegans. *Proceedings of the National Academy of Sciences*, **97**, 2674–2679.

408 Deus, K.M., Saavedra-Rodriguez, K., Butters, M.P., Black, W.C. & Foy, B.D. (2012) The effect of
409 ivermectin in seven strains of Aedes aegypti (Diptera: Culicidae) including a genetically
410 diverse laboratory strain and three permethrin resistant strains. *Journal of Medical*
411 *Entomology*, **49**, 356–363.

412 Enayati, A.A., Ranson, H. & Hemingway, J. (2005) Insect glutathione transferases and insecticide
413 resistance. *Insect Molecular Biology*, **14**, 3–8.

414 Falconer, D. S., & Mackay, T. F. C. Introduction to Quantitative Genetics (Harlow, UK, Longman,
415 1996).

416 Geary, T.G. (2005) Ivermectin 20 years on: Maturation of a wonder drug. *Trends in Parasitology*,
417 **21**, 530–532.

418 González-Gómez, L., Escobar, F., González-Tokman, D., Martínez-Ml, A. S., & Cruz, R. M. (2018). La
419 ganadería en Papantla, Veracruz: Posibilidades para la sostenibilidad. Ganadería Sustentable
420 En El Golfo de México. Instituto de Ecología, Xalapa, México, 432.

421 González-Tokman, D., Martínez M., I., Villalobos-Ávalos, Y., Munguía-Steyer, R., Ortiz-Zayas,
422 M.D.R., Cruz-Rosales, M. & Lumaret, J.-P. (2017) Ivermectin alters reproductive success, body
423 condition and sexual trait expression in dung beetles. *Chemosphere*, **178**.

424 González-Tokman, D., Bauerfeind, S. S., Schäfer, M. A., Walters, R. J., Berger, D., & Blanckenhorn,
425 W. U. (2022). Heritable responses to combined effects of heat stress and ivermectin in the
426 yellow dung fly. Chemosphere, 286, 131030.

427 Hawkins, N.J., Bass, C., Dixon, A. & Neve, P. (2019) The evolutionary origins of pesticide resistance.
428 *Biological Reviews*, **94**, 135–155.

429 Hlina, B. L., & Hlina, M. B. L. (2020). Package "ecotox.".

430 Holter, P., Sommer, C. & Gronvold, J. (1993) Attractiveness of dung from ivermectin-treated cattle
431 to Danish and afrotropical scarabaeid dung beetles. *Veterinary parasitology*, **48**, 159–169.

432 Kane, N.S., Hirschberg, B., Qian, S., Hunt, D., Thomas, B., Brochu, R., Ludmerer, S.W., Zheng, Y.,
433 Smith, M., Arena, J.P., Cohen, C.J., Schmatz, D., Warmke, J. & Cully, D.F. (2000) Drug-resistant
434 Drosophila indicate glutamate-gated chloride channels are targets for the antiparasitics
435 nodulisporic acid and ivermectin. *Proceedings of the National Academy of Sciences*, **97**,
436 13949–13954.

437 Kaplan, R.M. (2004) Drug resistance in nematodes of veterinary importance: A status report.
438 *Trends in Parasitology*, **20**, 477–481.

439 Laing, R., Gillan, V. & Devaney, E. (2017) Ivermectin – Old drug, new tricks? *Trends in Parasitology*,
440 **33**, 463–472.

441 Lopez-Collado, J., Cruz-Rosales, M., Vilaboa-Arroniz, J., Martínez-Morales, I. & Gonzalez-
442 Hernandez, H. (2017) Contribution of dung beetles to cattle productivity in the tropics: A
443 stochastic-dynamic modeling approach. *Agricultural Systems*, **155**, 78–87.

444 Lumaret, J.-P., Errouissi, F., Floate, K., Römbke, J. & Wardhaugh, K. (2012) A review on the toxicity
445 and non-target effects of macrocyclic lactones in terrestrial and aquatic environments.
446 *Current Pharmaceutical Biotechnology*, **13**, 1004–1060.

447 Luo, L., Sun, Y. & Wu, Y. (2013) Abamectin resistance in Drosophila is related to increased
448 expression of P-glycoprotein via the dEGFR and dAkt pathways. *Insect Biochemistry and*

449 *Molecular Biology*, **43**, 627–634.

450 Martínez M. I., J. P. Lumaret, R. Ortiz Zayas and Nassera Kadiri. 2017. The Effects of Sublethal and
451 Lethal Doses of Ivermectin on the Reproductive Physiology and Larval Development of the
452 Dung Beetle Euoniticellus intermedius. The Canadian Entomologist 149(4):461-472
453 doi:10.4039/tce.2017.11

454 Martínez IM, Martínez Diego AK, Cano BM, Lumaret JP (2019) The reproductive biology of
455 Euoniticellus intermedius (Reiche) (Coleoptera: Scarabaeinae: Oniticellini). Proc Entomol Soc
456 Washingt 121:642–656.

457 Mazzarri, M.B. & Georghiou, G.P. (1995) Characterization of resistance to organophosphate,
458 carbamate, and pyrethroid insecticides in field populations of Aedes aegypti from Venezuela.
459 *Journal of the American Mosquito Control Association*, **11**, 315–322.

460 Meyers, J.I., Gray, M., Kuklinski, W., Johnson, L.B., Snow, C.D., Black, W.C., Partin, K.M. & Foy, B.D.
461 (2015) Characterization of the target of ivermectin, the glutamate-gated chloride channel,
462 from Anopheles gambiae. *Journal of Experimental Biology*, **218**, 1478–1486.

463 Montes de Oca, E. & Halffter, G. (1998) Invasion of Mexico by two dung beetles previously
464 introduced into the United States. *Studies on Neotropical Fauna and Environment*, **33**, 37–45.

465 Nichols, L., Larsen, T.H., Spector, S., Davis, A., Escobar, F., Favila, M.E. & Vulinec, K. (2007) Global
466 dung beetle response to tropical forest modification and fragmentation: a quantitative
467 literature review and meta-analysis. *Biological Conservation*, **137**, 1–19.

468 Osei-Atweneboana, M.Y., Awadzi, K., Attah, S.K., Boakye, D.A., Gyapong, J.O. & Prichard, R.K.
469 (2011) Phenotypic evidence of emerging ivermectin resistance in Onchocerca volvulus. *PLoS*
470 *Neglected Tropical Diseases*, **5**, 1–11.

471 Perez-Cogollo, L.C., Rodriguez-Vivas, R.I., Ramirez-Cruz, G.T. & Miller, R.J. (2010) First report of the
472 cattle tick Rhipicephalus microplus resistant to ivermectin in Mexico. *Veterinary Parasitology*,
473 **168**, 165–169.

474 Pooda, H.S., Rayaisse, J.B., Hien, D.F.D.S., Lefèvre, T., Yerbanga, S.R., Bengaly, Z., Dabiré, R.K.,
475 Belem, A.M.G., Sidibé, I., Solano, P. & Mouline, K. (2015) Administration of ivermectin to
476 peridomestic cattle: A promising approach to target the residual transmission of human
477 malaria. *Malaria Journal*, **14**, 1–12.

478 Puniamoorthy, N., Schäfer, M.A., Römbke, J., Meier, R. & Blanckenhorn, W.U. (2014) Ivermectin
479 sensitivity is an ancient trait affecting all ecdysozoa but shows phylogenetic clustering among
480 sepsid flies. *Evolutionary Applications*, **7**, 548–554.

481 R Development Core Team. (2015) *R: A Language and Environment for Statistical Computing*. R
482 Foundation for Statistical Computing, Austria.

483 Rodríguez-Vivas, R.I., Miller, R.J., Ojeda-Chi, M.M., Rosado-Aguilar, J.A., Trinidad-Martínez, I.C. &
484 Pérez de León, A.A. (2014) Acaricide and ivermectin resistance in a field population of
485 Rhipicephalus microplus (Acari: Ixodidae) collected from red deer (Cervus elaphus) in the
486 Mexican tropics. *Veterinary Parasitology*, **200**, 179–188.

487 Seaman, J.A., Alout, H., Meyers, J.I., Stenglein, M.D., Dabiré, R.K., Lozano-Fuentes, S., Burton, T.A.,
488 Kuklinski, W.S., Black, W.C. & Foy, B.D. (2015) Age and prior blood feeding of Anopheles
489 gambiae influences their susceptibility and gene expression patterns to ivermectin-
490 containing blood meals. *BMC Genomics*, **16**, 1–18.

491 Shoop, W.L. (1993) Ivermectin resistance. *Parasitology Today*, **9**, 154–159.

492 Terada, Y., Murayama, N., Ikemura, H., Morita, T. & Nagata, M. (2010) Sarcoptes scabiei var. canis

493 refractory to ivermectin treatment in two dogs. *Veterinary Dermatology*, **21**, 608–612.

494 Terrill, T.H., Kaplan, R.M., Larsen, M., Samples, O.M., Miller, J.E. & Gelaye, S. (2001) Anthelmintic
495 resistance on goat farms in Georgia: Efficacy of anthelmintics against gastrointestinal
496 nematodes in two selected goat herds. *Veterinary Parasitology*, **97**, 261–268.

497 Verdú, J.R., Cortez, V., Ortiz, A.J., González-Rodríguez, E., Martinez-Pinna, J., Lumaret, J.-P., Lobo,
498 J.M., Numa, C. & Sánchez-Piñero, F. (2015) Low doses of ivermectin cause sensory and
499 locomotor disorders in dung beetles. *Scientific reports*, **5**, 1–10.

500 Wendell, M. D., Wilson, T. G., Higgs, S., & Black IV, W. C. (2000). Chemical and gamma-ray
501 mutagenesis of the white gene in Aedes aegypti. Insect molecular biology, 9(2), 119-125.

502 Wohde, M., Blanckenhorn, W.U., Floate, K.D., Lahr, J., Lumaret, J.P., Römbke, J., Scheffczyk, A.,
503 Tixier, T. & Düring, R.A. (2016) Analysis and dissipation of the antiparasitic agent ivermectin
504 in cattle dung under different field conditions. *Environmental Toxicology and Chemistry*, **35**,
505 1924–1933.

506 Yoon, K.S., Strycharz, J.P., Baek, J.H., Sun, W., Kim, J.H., Kang, J.S., Pittendrigh, B.R., Lee, S.H. &
507 Clark, J.M. (2011) Brief exposures of human body lice to sublethal amounts of ivermectin
508 over-transcribes detoxification genes involved in tolerance. *Insect Molecular Biology*, **20**,
509 687–699.

510 Zuur, A.F., Ieno, E.N., Walker, N.J., Saveliev, A.A. & Smith, G.M. (2009) *Mixed Effects Models and*
511 *Extensions in Ecology with R*. Springer, New York.

512

513

514

515 **Table 1.** Effect of experimental line (Control or IVM) in *Euoniticellus intermedius* dung beetles

516 across generations. GLM n.b.=negative binomial GLM; GLM q.b.=quasibinomial GLM; Cox p.h.=Cox

517 proportional hazard regression; RD=Residual deviance; X^2=Chi-squared. Significant effects are

518 shown in bold.

	Total brood balls (GLM n.b.)	Emerged beetles (GLM n.b.)	Proportion emerged (GLM q.b.)	Days to first emergence (Cox p.h.)
Generation	**RD=626.07, P=0.027**	**RD=611.1, P<0.001**	**RD=2719.1, P<0.001**	**X^2=186.0, P<0.001**
Line	**RD=618.1, P=0.004**	**RD=596.2, P<0.001**	**RD=2659.1, P=0.004**	**X^2=84.6, P<0.001**
Generation X Line	**RD=593.3, P=0.003**	RD=579.4, P=0.051	**RD=2428.0, P<0.001**	**X^2=49.4, P<0.001**

519

520

521 **Table 2.** Effect of experimental line (Control or IVM) and ivermectin treatment (0 [control], 10, 31

522 and 62 µg of ivermectin per kg of fresh dung) in *Euoniticellus intermedius* dung beetles across

523 generations. GLM n.b.=negative binomial GLM; GLM q.b.=quasibinomial GLM; Cox p.h.=Cox

524 proportional hazard regression; RD=Residual deviance; X^2=Chi-squared. Significant effects are

525 shown in bold.

	Total brood balls (GLM n.b.)	Emerged beetles (GLM n.b.)	Proportion emerged (GLM q.b.)	Days to first emergence (Cox p.h.)
Generation	**RD=573.5, P<0.001**	**RD=1037.7, P<0.001**	**RD=5421.8, P<0.001**	**X^2=182.2, P<0.001**
Line	**RD=564.8, P=0.003**	**RD=1020.7, P<0.001**	**RD=5291.2, P<0.001**	**X^2=4.8, P=0.029**
Treatment	RD=561.1, P=0.301	**RD=659.5, P<0.001**	**RD=2871.7, P<0.001**	**X^2=252.2, P<0.001**
Generation X Line	**RD=540.3, P<0.001**	**RD=642.0, P=0.001**	**RD=2728.4, P<0.001**	**X^2=42.1, P<0.001**
Generation X Treatment	**RD=502.7, P<0.001**	**RD=522.4, P<0.001**	**RD=2223.4, P<0.001**	**X^2=89.6, P<0.001**
Line X Treatment	RD=499.7, P=0.392	**RD=485.3, P<0.001**	**RD=2019.8, P<0.001**	X^2=4.8, P=0.189
Generation X Line X Treatment	RD=496.6, P=0.926	**RD=488.8, P=0.036**	**RD=1790.9, P<0.001**	**X^2=38.8, P<0.001**

526

527

528 **Table 3.** Effect of experimental line (Control or IVM) and ivermectin treatment (0 [control], 10, 31

529 and 62 µg of ivermectin per kg of fresh dung) across generations in *Euoniticellus intermedius* dung

530 beetles. GLM n.b.=negative binomial GLM; GLM q.b.=quasibinomial GLM; Cox p. h.=Cox

531 proportional hazard regression; RD=Residual deviance. Significant effects are shown in bold.

Total brood balls (GLM n.b.)	**F1**	**F2**	**F3**	**F6**	**F18**
Line	NS	NS	**P<0.001**	NS	P=0.10
Treatment	NS	**P<0.001**	NS	**P<0.001**	NS
Line X Treatment	NS	NS	NS	NS	NS
Emerged beetles (GLM n.b.)	**F1**	**F2**	**F3**	**F6**	**F18**
Line	NS	NS	**P<0.001**	NS	**P<0.001**
Treatment	NS	**P<0.001**	**P<0.001**	**P<0.001**	**P<0.001**
Line X Treatment	NS	NS	**P<0.001**	NS	**P<0.001**
Proportion emerged (GLM q.b.)	**F1**	**F2**	**F3**	**F6**	**F18**
Line	**P=0.027**	**P<0.001**	**P=0.010**	**P=0.032**	**P<0.001**
Treatment	NS	P=0.145	**P<0.001**	**P<0.001**	**P<0.001**
Line X Treatment	NS	**P<0.001**	**P<0.001**	NS	**P<0.001**
Days to first emergence (Cox p.h.)	**F1**	**F2**	**F3**	**F6**	**F18**
Line	P=0.175	P=0.167	**P<0.001**	**P=0.023**	P=0.220
Treatment	**P<0.001**	P=0.744	**P<0.001**	**P<0.001**	**P<0.001**
Line X Treatment	**P=0.037**	**P=0.012**	**P<0.001**	P=0.167	P=0.055

532

533

534 **Figure 1.** Experimental design to test for ivermectin resistance in *Euoniticellus intermedius* dung
535 beetles across multiple generations of exposure. Field-caught beetles were reproduced in the
536 laboratory for one generation in ivermectin-free dung before starting two experimental lines (F0),
537 one exposed to ivermectin (IVM line, 10 µg of ivermectin per kg of fresh dung) and the free of
538 ivermectin (Control line) until F18. In generations F1, F2, F3, F6 and F18 we performed toxicity
539 experiments to evaluate dung beetle performance at different ivermectin concentrations (IVM10,
540 IVM31 and IVM62, corresponding to 10, 31 and 62 µg of ivermectin per kg of fresh dung). For each
541 line, generation and toxicity experiment (except for the selection lines in the F6) we quantified the
542 number of brood masses produced per couple, the number of emerged beetles, the proportion of
543 emerged beetles and days to emergence. In F18, five couples of emerged beetles from treatment
544 IVM62 were exposed to IVM62 treatment to evaluate the same variables. Sample sizes are given in
545 Figure 2.

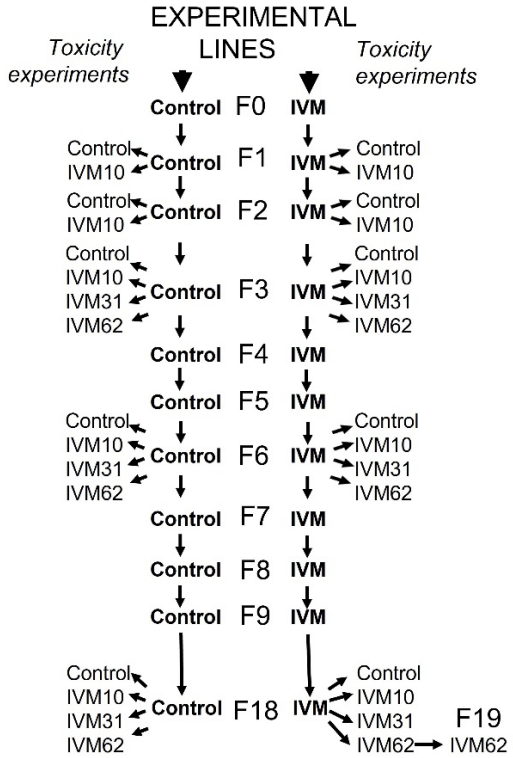

546

Figure 2. Effect of experimental line (Control or IVM) across generations in *Euoniticellus intermedius* dung beetles. Sample sizes are the same for figures a, b and c and get reduced in the analysis of days to emergence, as there were nests where no beetles emerged (figure d). Numbers next to the bars represent the numbers of analyzed couples.

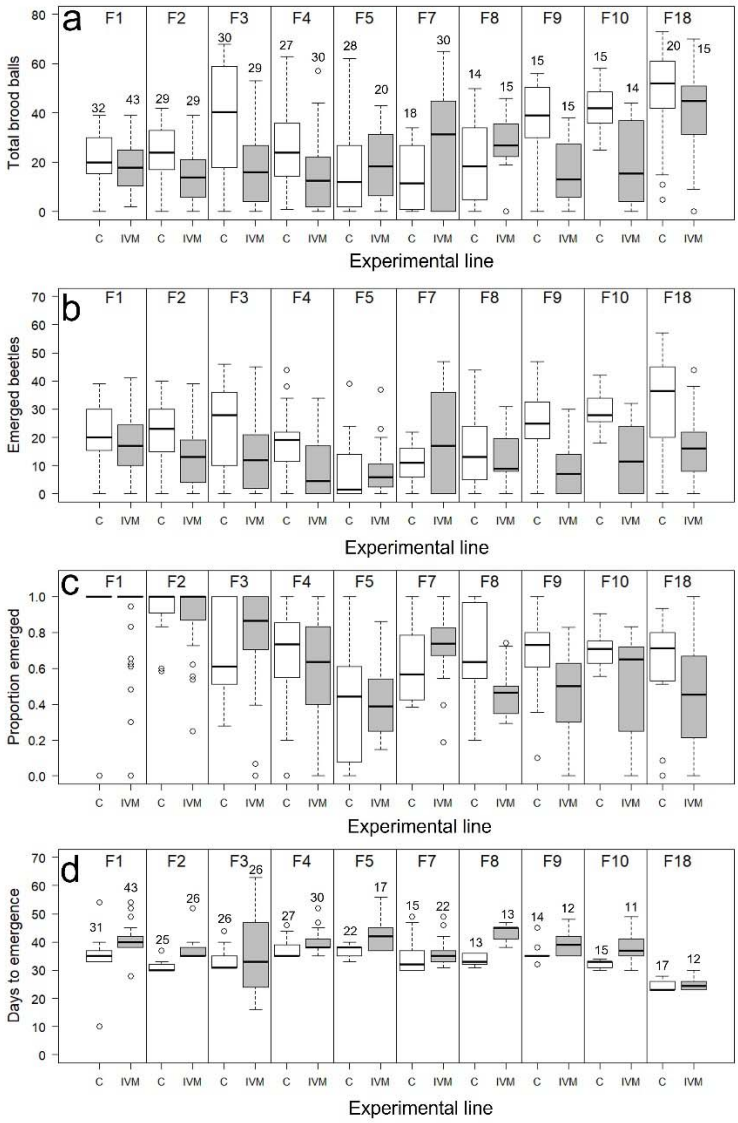

552 **Figure 3.** Effect of experimental line (Control or IVM) and ivermectin treatment (0 [control], 10, 31
553 and 62 µg of ivermectin per kg of fresh dung) across generations in *Euoniticellus intermedius* dung
554 beetles from toxicity experiments. Sample sizes are the same for figures a, b and c and get reduced
555 in the analysis of days to emergence, as there were nests where no beetles emerged (figure d).
556 Numbers next to the bars represent the numbers of analyzed couples. *Represents treatments
557 where there were no emerged beetles and were not considered for the analyses of days to
558 emergence.

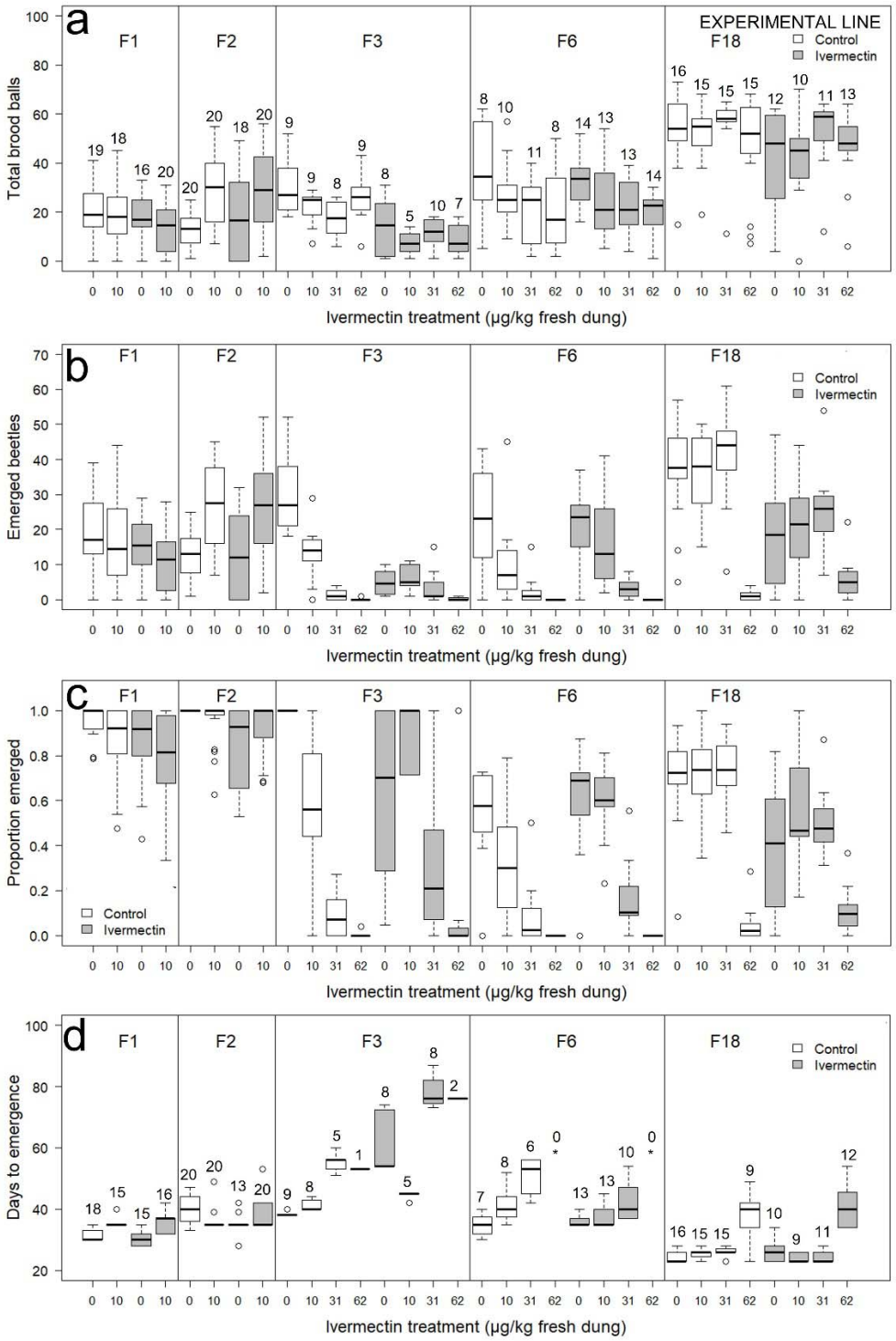
a
EXPERIMENTAL LINE
F1
F2
F3
F6
F18
Control
Ivermectin
Total brood balls
Ivermectin treatment (µg/kg fresh dung)
b
Emerged beetles
Ivermectin treatment (µg/kg fresh dung)
c
Proportion emerged
Ivermectin treatment (µg/kg fresh dung)
d
Days to emergence
Ivermectin treatment (µg/kg fresh dung)

559

Table S1. Regressions coefficients of parental traits on offspring traits (Broad Sense Heritability) across 9 generations of selection. Selection line and generation were included as covariates, and were significant for all the models (except Line for models analyzing Emergence proportion). The interaction between parental traits and line was not significant and excluded from final models. Number within parentheses indicate the S.E. of each estimate. All estimates were not statistically significant with an alpha=0.05.

	Total brood balls	Emerged beetles	Emergence proportion (logit)	Days to emergence
Offspring trait (daughters)	0.025 (0.070)	0.091 (0.074)	0.057 (0.091)	0.039 (0.080)
Offspring traits (sons)	-0.001 (0.072)	-0.038 (0.075)	0.041 (0.10)	0.039 (0.093)