Mechanistic explanation of neuronal plasticity and engrams using equivalent circuits

Martin N. P. Nilsson*
RISE Research Institutes of Sweden,
P.O.B. 1263, SE-164 29 Kista, Sweden
neuronplasticity@drnil.com
ORCID: 0000-0002-7504-0328

Abstract

This paper introduces a comprehensive mechanistic model of a neuron with plasticity that explains the creation of engrams, the biophysical correlates of memory. In the context of a single neuron, this means clarifying how information conveyed as time-varying input signals is processed, stored, and subsequently recalled. Moreover, the model addresses two additional, long-standing, specific biological problems: how Hebbian plasticity, which amplifies synaptic weight, integrates with homeostatic plasticity, which stabilizes it, and how to identify a concise learning rule for synapses.

In this study, a biologically accurate Hodgkin-Huxley-style electric-circuit equivalent is derived through a one-to-one mapping from the known properties of ion channels. The dynamics of the synaptic cleft, which is often overlooked, is found to be essential in this process. Analysis of the model reveals a simple and concise learning rule, indicating that the neuron functions as an internal-feedback adaptive filter, which is commonly used in signal processing. Simulation results confirm the circuit's functionality, stability, and convergence, demonstrating that even a single neuron without external feedback can function as a potent signal processor.

The article is interdisciplinary and spans a broad range of subjects within the realm of biophysics, including neurobiology, electronics, and signal processing.

Keywords: Neuroplasticity, learning, memory, synapse, engram, homeostatic plasticity, Hebbian plasticity, excitatory-inhibitory balance, adaptive filter, prediction error.

*The author declares no competing financial interests.

Significance statement: Mechanistic neuron models with plasticity are crucial for understanding the complexities of the brain and the processes behind learning and memory. These models provide a way to study how individual neurons and synapses in the brain change over time in response to stimuli, allowing for a more nuanced understanding of neuronal circuits and assemblies. Plasticity is a crucial aspect of these models, as it represents the ability of the brain to modify its connections and functions in response to experiences. By incorporating plasticity into these models, researchers can explore how changes at the synaptic level contribute to higher-level changes in behavior and cognition. Thus, these models are essential for advancing our understanding of the brain and its functions.

PhySH 2023 terms: Neuroplasticity, Learning, Memory, Synapses.

MeSH 2023 terms: Neuronal Plasticity [G11.561.638], Association learning [F02.463.425.069.296], Memory [F02.463.425.540], Synaptic transmission [G02.111.820.850]

Introduction

How does the brain remember? This classical question has recently received considerable attention focusing on the central nervous system's handling of engrams [36; 30; 19; 11; 20]. These involve coordinated synaptic changes, mandating a cell-wide coherent explanation of multisynaptic plasticity. However, such explanations have encountered difficulties despite massive research efforts by experimental and theoretical methods. This paper suggests that these problems can be resolved by mapping the neuron to an equivalent circuit and then showing that this circuit implements an adaptive filter (fig. 1).

Experimental methods typically investigate neurons' responses to stimuli and various biological manipulations such as ion channel blocking and genetic modifications. Since the first discovery of synaptic plasticity [3], experiments have

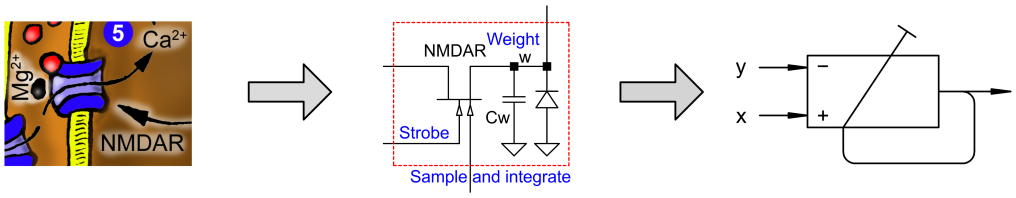

Figure 1: **Neurons as adaptive filters.** This article posits that neurons operate as self-contained adaptive filters. The line of argument goes by mapping the neuron (left) to an equivalent circuit (middle), observing that this circuit implements an adaptive filter (right), and validating the circuit's function by experiments.

revealed a large diversity of overlapping and interacting plasticity mechanisms [23; 43]. A limitation of experiments *in vitro* is that crucial parameters such as temperature, membrane potential, and calcium concentration often transcend their physiological ranges. Experiments *in vivo*, on the other hand, are degraded by external disturbances, such as irrelevant signals from connected neurons.

The theoretical approach can be said to study how plasticity *should* work. In this case, the principal obstacle is to find biologically plausible mechanisms that match the theory. A significant theoretical contribution showed that classical Hebbian plasticity alone leads to the saturation of synaptic weights and the ensuing loss of information [35; 2]. Subsequent experiments demonstrated the existence of additional, homeostatic mechanisms that prevent distortion and stabilize synaptic plasticity [47; 46].

Because of the challenges posed by both the diversity of plasticity mechanisms and the scarcity of biologically plausible models, the timing and integration of homeostatic and Hebbian plasticity is an open issue [21]. Therefore, a novel approach is chosen here, modeling a neuron as an electric-circuit equivalent in the spirit of Hodgkin and Huxley's seminal axon model [17] while strictly adhering to known properties of neuronal ion channels to ensure biological veracity. The resulting circuit can be interpreted mechanistically as a variant of a *Least Mean Square* (LMS) *adaptive filter*, a versatile device well-known in the field of signal processing [16; 15]. This interpretation takes advantage of the rich theory developed for adaptive filters. It explains precisely and quantitatively how the neuron modifies its synapses in orchestration to store time-variable functions or *signals* as required by procedural memory engrams.

The proposed model being mechanistic is essential here because such models are superior to empirical models by providing a more comprehensive and detailed understanding of the underlying processes and mechanisms that give rise to the observed phenomena [5]. Mechanistic models describe the physical or chemical interactions between system components based on established laws of physics or chemistry. These models enable researchers to identify specific cause-and-effect relationships, as well as to predict the behavior of the system under different conditions.

In contrast, empirical models are based solely on observations and data, without explicitly describing the underlying mechanisms or processes. Empirical models may be able to accurately predict the behavior of a system within the range of data used to develop the model, but cannot explain how or why the system behaves the way it does. They are typically less interpretable and provide less insight into the fundamental workings of the system.

While empirical models may be helpful for prediction and practical applications, mechanistic models are generally more potent for scientific understanding and discovery. They enable researchers to test hypotheses, make predictions be-

yond the range of the available data, and explore new scenarios and mechanisms. The use of a mechanistic model in this study represents a more powerful and informative approach to understanding neuronal function and plasticity mechanisms involved in memory creation.

This paper is widely interdisciplinary, spanning biophysics, neurobiology, electronics, and signal processing. Therefore, it is helpful if the reader is familiar with these fields to fully appreciate the paper's content.

Organization of this paper

The broad interdisciplinary scope of this article deserves some justification.

The rationale for familiarity with electronics stems from the fact that neurons can be described in terms of molecular biology reactions, as is customary in classical neurobiology. Nonetheless, a thorough understanding of a neuron's signal-processing capabilities necessitates a quantitative methodology. Given the numerous synapses associated with each neuron and the resulting complex, non-linear, feedback-coupled differential equations, the manual resolution of these equations is unattainable. Instead, by converting chains of reactions to equivalent electrical circuits, insights from a century of experience with electronic circuits can be leveraged, along with the ability to identify circuit patterns or "motifs." This approach also facilitates the use of circuit simulators for rapid equation solving.

The paper's main topic is deriving the equivalent circuit and adaptive filter model from established knowledge about neuronal ion channels. For a mechanistic model, it is imperative to select an appropriate level of description that is adequately detailed yet not overly complex to provide a functional explanation and address the three specific problems under consideration. To achieve this, the paper reviews the established function of inhibitory and excitatory synaptic ion channels to a level allowing for a direct translation into an electrical network. Whereas this review may repeat an old story to neurobiologists, it is essential in order to demonstrate the one-to-one nature of the translation.

Some familiarity with signal processing is warranted as the paper deals with neurons' information processing functions. The paper's main conclusion is that a single neuron can be abstractly characterized as an adaptive filter, a powerful and fundamental component in signal processing. The basic principles of adaptive filters are, therefore, briefly reviewed. However, understanding the full potential of an adaptive filter, and consequently, a neuron utilized as a signal processor, necessitates experience of adaptive filter applications and mathematical tools beyond this paper's scope. It is kindly suggested that readers delve into the abundant literature on adaptive filters, *e.g.*, [16; 41; 39], for a more comprehensive review.

An adaptive filter's function in its fullest generality is to determine how a reference input can be expressed in terms of a given set of input components, or *basis*.

Whereas the equivalent circuit's implementation of this function may be apparent to some readers, two experiments are performed to support this claim further. The first experiment demonstrates the circuit's ability to approximate an inhibitory signal $y(t)$ by appropriately weighting excitatory inputs $x_k(t)$. The second experiment confirms that action potentials function as clock pulses ("strobes"), triggering synaptic weight changes.

The results section first presents the convergence and stability outcomes of the experiments diagrammatically, followed by an explanation of how the model in its adaptive filter capacity addresses the three specific issues concerning engrams, Hebbian-homeostatic plasticity, and the synaptic learning rule.

Subsequently, the discussion section introduces related work and explores some implications of viewing the neuron as an adaptive filter.

The investigation spans a time frame from milliseconds to minutes, encompassing short-term plasticity (STP) and early long-term plasticity (LTP) while excluding late LTP due to its reliance on nuclear processes and its consolidating function.

In summary, this manuscript models a neuron's primary biochemical information processing pathways as equivalent electrical circuits, reviews the adaptive filter concept, and employs it to describe the neuron's overall function. The model's efficacy is demonstrated through two simulation experiments, substantiating the neuron's capacity to operate as an adaptive filter. These results support the proposed model's validity and potential for advancing research in this field.

Methods: Modeling the neuron

Overall structure of a neuron

This subsection provides a detailed description of the structure and function of a generic, glutamatergic neuron, highlighting its key components, synaptic types, and their roles in signal transmission and plasticity.

The target neuron is a generic, glutamatergic neuron equipped with AMPA (α-amino-3-hydroxy-5-methyl-4-isoxazolepropionic acid) receptors (AMPARs) and NMDA (N-methyl-D-aspartate) receptors (NMDARs). This kind of neuron has been extensively studied and is representative of a substantial fraction of neurons in the central nervous system (CNS) [45], typical examples of which are the hippocampal neurons where plasticity was first demonstrated [3].

The primary components of a neuron include the dendrites, which receive inputs from presynaptic neurons; the soma, which aggregates the contributions from dendrites; and the axon, which transmits the result to other neurons (fig. 2). Axons can branch into axon collaterals carrying identical signals. Synapses, the contact

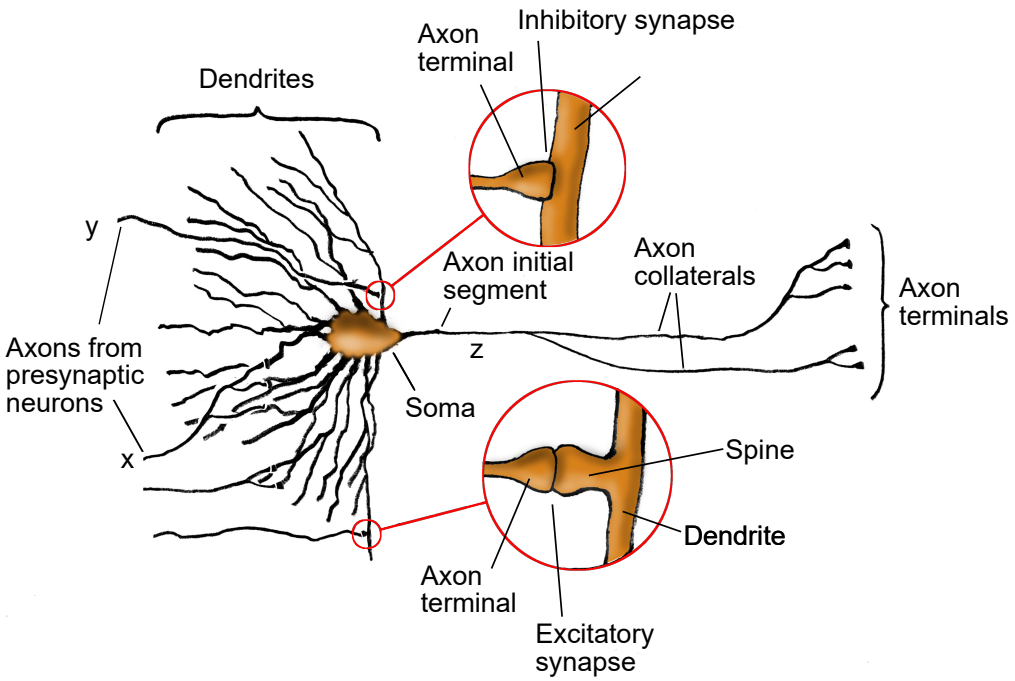

Figure 2: **Structure of a generic neuron.**

points between axons and dendrites, are of two types: inhibitory and excitatory. They convert incoming stochastically rate-coded sequences of action potentials (APs), or more succinctly, PFM (pulse-frequency modulated) spiketrains [32], into postsynaptic currents that alter the membrane potential, the voltage difference between the neuron's interior and exterior. This potential is electrotonically transmitted to the axon initial segment (AIS), where it is converted back into a spiketrain for output via the axon.

Ultrastructural studies reveal that inhibitory synapses are typically situated proximally to the soma, either directly on a dendrite or the soma itself. In contrast, excitatory synapses tend to be positioned more distally, connecting with dendrites via spines—small protrusions on the dendrites. These spines are associated with plasticity, indicating that excitatory synapses are generally plastic, whereas inhibitory synapses are non-plastic. These principles are occasionally referred to as Gray's rules [12; 34; 45; 14].

Inhibitory synapse mapping

The focus of this subsection is the functioning of an inhibitory synapse in response to an action potential, including the involvement of neurotransmitters and

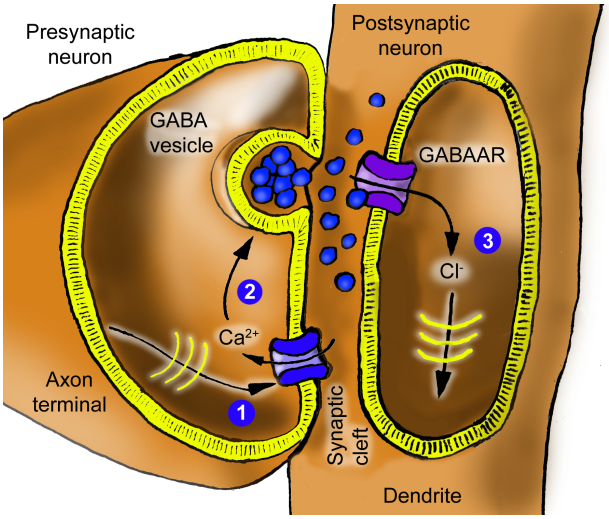

Figure 3: **Inhibitory synapse schematic.**

receptors. The subsection presents the corresponding equivalent electrical-circuit model that reflects this process, inspired by Hodgkin and Huxley's axon model.

When action potentials reach the axon terminal (fig. 3), the membrane potential depolarizes (increases), causing voltage-gated calcium channels ($\mathrm{Ca_V}$) to open (1). The calcium ion influx triggers the release of the neurotransmitter γ-aminobutyric acid (GABA) from nearby vesicles (2) into the synaptic cleft. GABA binds to GABA type A receptors (GABAAR) on the postsynaptic neuron, opening the receptor channel to chloride ions (3) [40]. These ions are negatively charged and hyperpolarize (reduce) the membrane potential. A circuit equivalent for the inhibitory synapse in the spirit of Hodgkin and Huxley's seminal axon model [17] is shown in fig. 4.

The model adopts Hodgkin and Huxley's view of gated ion channels as voltage-controlled conductances. Because they function as ideal field-effect transistors (FETs) in practice, the schematics use modern transistor symbols. The GABAAR is defined by the equation $I_{DS} = \gamma V_{DS} V_G$, where the constant $\gamma = \gamma_{\mathrm{GABAAR}}$ is the transistor's gain (fig. 5A), and I_{DS} and V_{DS} are the channel current and voltage, respectively. V_G is the gate voltage representing the GABA concentration.

A single transistor is chosen to represent the entire population of GABAARs at one synapse. Overall, the circuit inverts an incoming train of positive voltage pulses to negative current pulses and filters them through a lowpass filter before integrating them into the membrane potential. More specifically, an action potential arriving at the axon terminal travels the GABA pathway and gates a chloride-ion current at the GABAAR.

The resistor R_z represents the transport processes that circulate the chloride

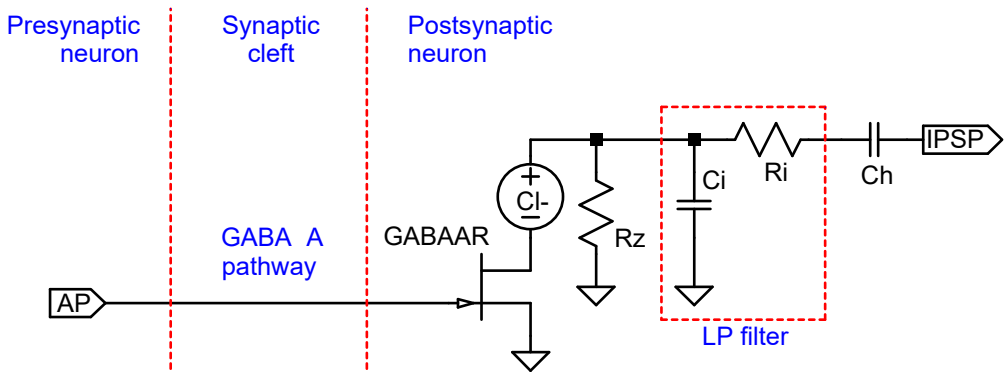

Figure 4: **Inhibitory synapse circuit equivalent**. The driving potential of chloride ions is negative, so a positive pulse input at AP will lead to a negative current pulse at IPSP.

back out of the cell. The signal is filtered on its way to the soma by a lowpass filter R_iC_i composed of the spino-dendritic axial resistance R_i and capacitance C_i. The series capacitance C_h succinctly represents the homeostatic machinery that maintains the neuron's mean internal potential at a comfortable level for the neuron. The inhibitory synapse's output into the dendrite or the soma is a negative current pulse, the inhibitory postsynaptic current (IPSC).

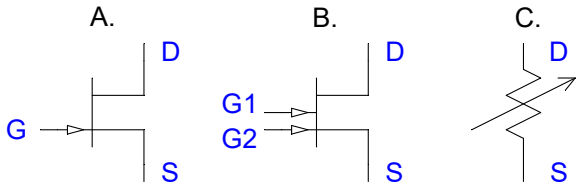

Figure 5: **Ion channels as transistors.** A. Single-gated FET for GABAAR and Ca_V channels, defined by $I_{DS} = \gamma V_{DS} V_G$. B. Double-gated FET for NMDAR and AMPAR, defined by $I_{DS} = \gamma V_{DS} V_{G1} V_{G2}$. C. Hodgkin-Huxley symbol of gated ion channel. The function is the same, but the gate is implicit.

Excitatory synapse mapping

This subsection examines the functioning of an excitatory synapse, including the roles of calcium ions, glutamate, AMPARs, and NMDARs, the process of synaptic plasticity, and the translation of these biological processes into an equivalent electrical-circuit model.

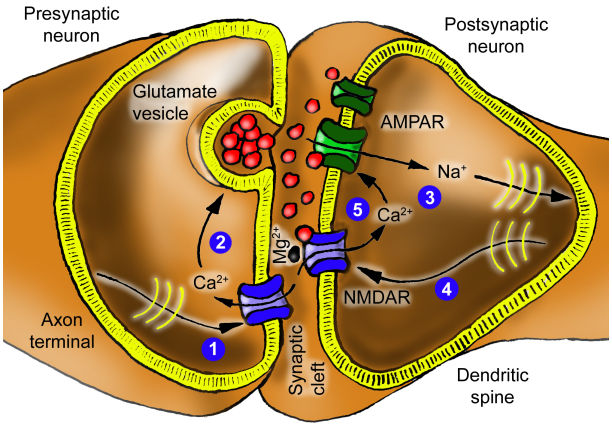

Figure 6: **Excitatory synapse schematic.** A crucial experiment by Borst and Sakmann [4] showed that the opening of calcium channels in the presynpatic neuron at (1) will affect the amount of calcium ions entering the post-synaptic neuron at (5).

The functioning of an excitatory synapse (fig. 6) is similar to that of an inhibitory synapse, but the plasticity associated with spines adds complexity to the model. After lowpass filtering, excitatory input pulses increase the postsynaptic membrane potential, and the synapse's efficacy (gain) is modified depending on the input's magnitude and the current membrane potential.

In more detail, the arriving action potential enables calcium ions to enter the presynaptic terminal (1) and trigger the release of the neurotransmitter glutamate (2). Glutamate binds to AMPARs on the postsynaptic neuron, opening the channels to positively charged sodium ions (3), which depolarize the membrane potential.

Additionally, glutamate activates NMDARs responsible for the neuron's plasticity [18; 13; 45]. The increased membrane potential repels an external magnesium ion blocking the NMDAR (4) [33; 27], allowing a sample of the external calcium $[Ca^{2+}]_e$ in the synaptic cleft to enter the postsynaptic cell (5). This calcium influx regulates *the number* of AMPARs, constituting the synaptic weight (efficacy) through a cascade of downstream reactions [34; 18].

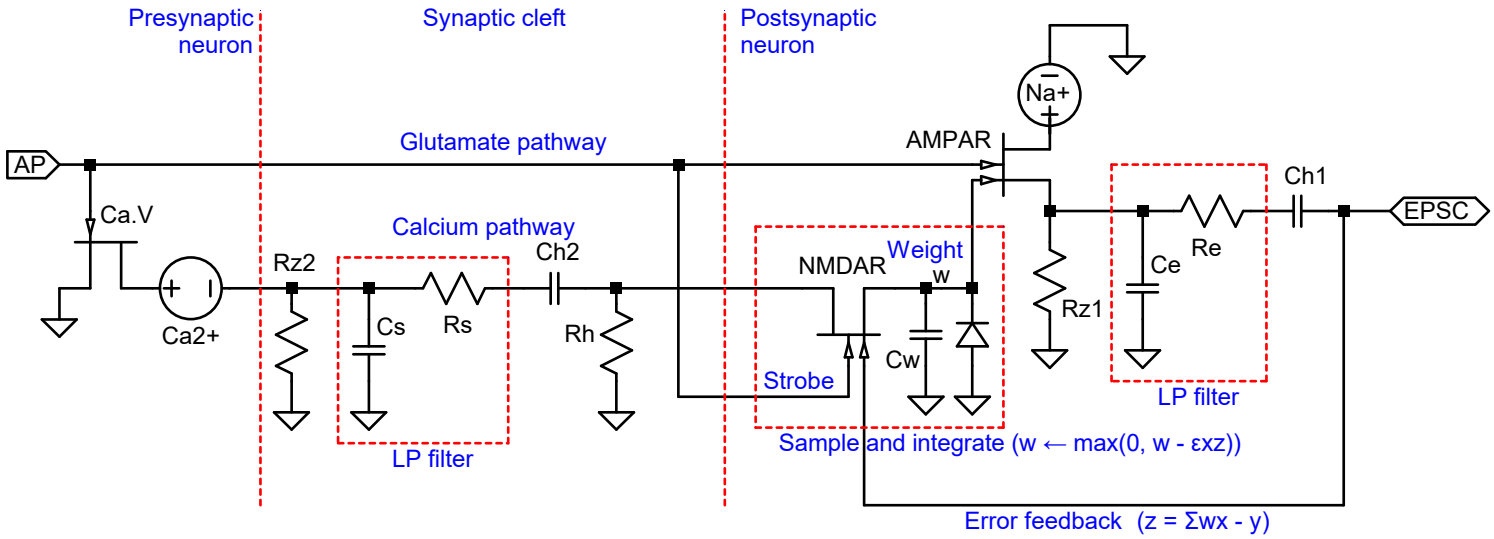

Figure 7: **Excitatory-synapse circuit equivalent.** Annotated for comparison with the excitatory synapse in fig. 6 and the adaptive filter in fig. 8. Please pay special attention to the calcium pathway and the sample-and-integrate block, as they are pivotal for the model and the discussions in this article.

Fig. 7 shows an electrical-circuit equivalent for the excitatory synapse. A voltage pulse, representing the presynaptic action potential and corresponding glutamate release, injects a positive current through the AMPAR. This current undergoes lowpass filtering en route to the soma with a cutoff frequency of $f_c = 1/(2\pi R_e C_e)$, which may vary substantially across different synapses within the same neuron. The culmination of this process is an excitatory postsynaptic current (EPSC) that is integrated with other EPSCs and inhibitory postsynaptic currents (IPSCs) by the membrane capacitance C_m of the soma and proximal dendrites. The ensuing (AC, alternating current) membrane potential v_m is electrotonically propagated throughout the cell.

The NMDAR, modeled here as a dual-gate transistor, senses the membrane potential with one gate, whereas the other ("strobe") signals glutamate activation, enabling synaptic weight modification. The NMDAR transistor samples the calcium concentration in the synaptic cleft, which—importantly—is depleted when a presynaptic action pulse arrives, because the pulse causes presynaptic calcium channels to open, consuming some of the synaptic cleft's calcium content [4]. The cleft acts as a calcium buffer and lowpass filters the calcium-encoded signal with the time constant $R_s C_s$.

The capacitor C_w represents the intracellular pathway from calcium entry to AMPAR regulation [45]. The voltage spanning this capacitor corresponds to the synaptic weight, which is defined by number of AMPARs and hence, is invariably non-negative.

The NMDAR's critical function is to act as a *multiplier* of the input and the feedback, represented as the external calcium concentration $[\mathrm{Ca}^{2+}]_\mathrm{e}$ and the membrane potential v_m, respectively. C_{h2} and R_h represent homeostasis of the calcium pathway. The diode in parallel with C_w ensures that the synaptic weight is greater than or equal to zero.

The complete equivalent circuit for the neuron can be formed by combining the circuits illustrated in fig. 4 and fig. 7. However, before proceeding to show that the complete circuit implements an adaptive filter, the next subsection offers a brief review of such filters.

Internal structure and operation of an adaptive filter

This subsection concisely reviews the fundamental adaptive filter (fig. 8), which can be thought of as a procedure or algorithm. Its principal function is to find weights $w_1, w_2, \ldots, w_n$ such that the weighted sum $\Sigma w_k x_k$ of candidate or component signals $x_1, x_2, \ldots, x_n$ approximates a reference signal y. The component signals may originate from different sources or be derived from a single input x using a delay line or a filter bank, as shown in the figure.

Depending on how the filter is connected, it can perform a variety of essential

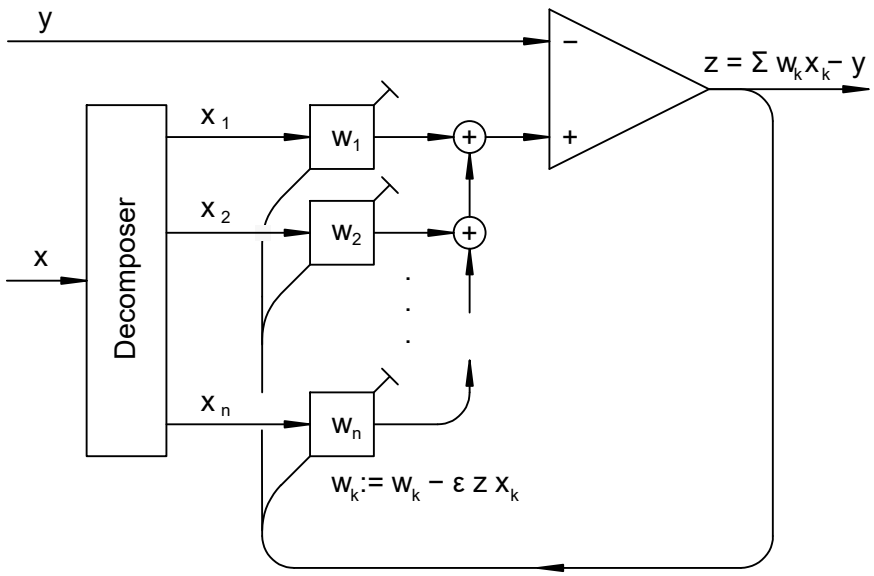

Figure 8: **Structure of an adaptive filter** [15]. A box with input x_k and tunable weight w_k computes the product $x_k w_k$ and corresponds to the excitatory synapse in fig. 7. The feedback z is crucial for adjusting the weights. The image is a graph representation of algorithm 1.

signal processing tasks such as model creation, inverse model creation, prediction, and interference cancellation [16]. Relevant for biological systems is a configuration suggested to address the sensorimotor association problem, or the process by which the brain learns which neuron is connected to which muscle [31].

The Least Mean Squares (LMS) algorithm (algorithm 1) [15], also known as the Widrow-Hoff LMS rule, is a method for updating the weights of an adaptive filter. It operates in discrete time steps $t = t_1, t_2, \ldots$, where at each step it calculates the *error feedback* z, which is the difference between the *weighted sum of the input signals* x_k and the reference signal y. Then, it *updates all the weights* w_k by subtracting the associated feedback corrections, which are calculated as $\Delta w_k = \varepsilon z x_k$, where ε is the learning rate. This learning rate is a positive constant, and its selection involves a balance between the convergence speed and stability against noise.

The convergence of the adaptive filter can be understood intuitively as follows: Suppose that some weight w_j is slightly too large and that the corresponding input x_j is positive. Then the error z will also tend to be positive and will be fed back to cause a reduction of the weight w_j by $\varepsilon z x_j$. A similar argument can be used when instead w_j is too small or x_j is negative. Proving the convergence of the

Algorithm 1: The basic LMS algorithm.

```
input    : x_k, 1 ≤ k ≤ n ;                /* Component signals */
input    : y ;                              /* Reference signal */
constant: n ≥ 1 ;                        /* Number of components */
constant: ε > 0 ;                              /* Learning rate */
output   : z ;                                  /* Error signal */
local    : w_k > 0, 1 ≤ k ≤ n ;                       /* Weights */
for t ← t_1, t_2, ... do
    z ← −y + Σ_{k=1}^{n} ε w_k x_k ;             /* Compute error */
    for k ← 1, ..., n do
        w_k ← w_k − ε z x_k ;                   /* Update weights */
    end
end
```

weights formally can be difficult in a general case, but the LMS rule has proven to be robust in practical applications.

The adaptive filter can be interpreted differently, depending on one's perspective. A biologist might see it as a system that maintains a balance between excitatory and inhibitory inputs [37; 7; 44]. On the other hand, a physicist might view the filter as performing a wavelet transform of the signal y using wavelets x_k [26], with the weights serving as transform coefficients.

Understanding the neuron as an adaptive filter

Here it is established that the neuron's equivalent circuit operates as an adaptive filter suggesting that the neuron also embodies this functionality.

The neuron's equivalent circuit as an adaptive filter

Interpreting the neuron as an adaptive filter is greatly simplified by modeling the neuron as an equivalent electric circuit. The combination of the synapse circuits in fig. 4 and fig. 7 into a circuit equivalent for the neuron is shown in fig. 9. This circuit converts the spiketrain input to membrane potential. The subsequent ouput conversion of the membrane potential to an output spiketrain and the application of an activation function $\varphi(z)$ are omitted here because a mechanistic model for them has been presented elsewhere [32] and does not directly influence the input conversion.

The side-by-side comparison of the adaptive filter, as shown in fig. 8 and the neuron model presented in fig. 9 offers detailed agreement, indicating that both the

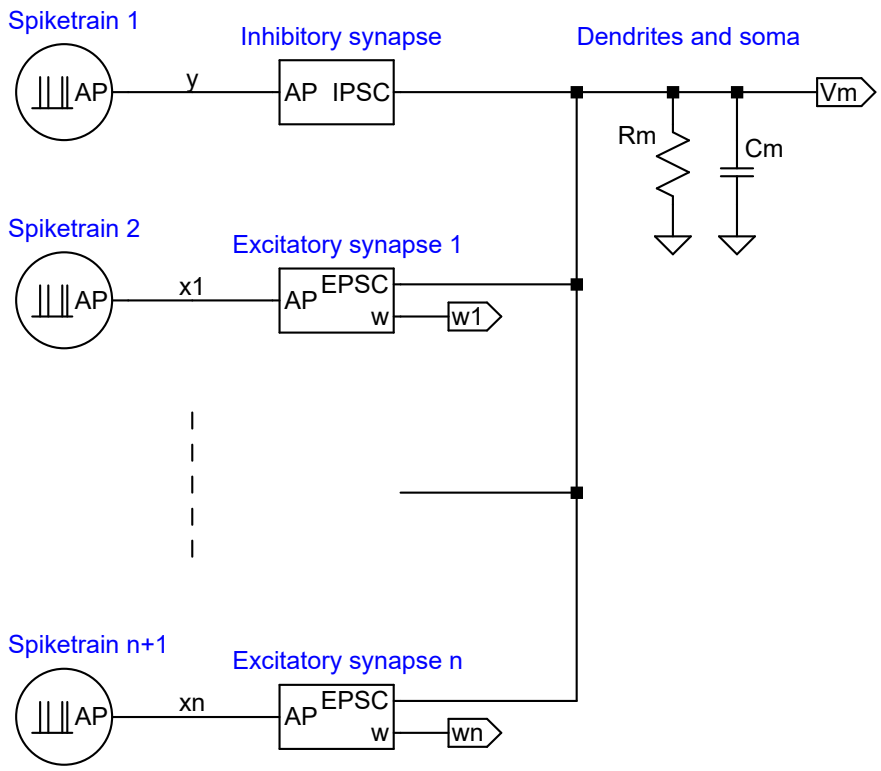

Figure 9: **The neuron equivalent circuit.** The IPSC and EPSC blocks are defined in fig. 4 and fig. 7, respectively. Labels $y, x1, \ldots, xn$ denote unfiltered action potential (spiketrain) inputs which are lowpass filtered in the synapse blocks. The subsequent conversion of v_m back to an output spiketrain and the application of an activation function are omitted.

circuit and, by extension, the neuron implement a variant of the LMS algorithm (algorithm 2). The match between the circuit and the adaptive filter is corroborated below by illustrating how the circuit realizes the summation operations, error feedback, and weight updates. Furthermore, an explanation is provided for the scenario where component inputs are redundant or linearly dependent, a common condition for biological neurons.

Summation operations: When comparing the functional blocks in fig. 8 with those in fig. 9, it is evident that the summation operations in the adaptive filter align with the addition of currents in the neuron's equivalent circuit, as Kirchhoff's law dictates. This law states that the sum of currents entering a junction must equal the sum of currents leaving it, mirroring the summation process in the adaptive filter.

Error feedback: A rapid error feedback signal, labeled by z in fig. 8 and fig. 7,

Algorithm 2: The LMS algorithm, full neuron version with activation function included. The inputs are assumed to already be lowpass filtered.

```
input    : x_k, 1 ≤ k ≤ n ;          /* Excitatory signals */
input    : y ;          /* Combined inhibitory signals */
constant: n ≥ 1 ;              /* Number of components */
constant: ε > 0 ;                     /* Learning rate */
function: φ(·) ;                /* Activation function */
local    : w_k > 0, 1 ≤ k ≤ n ;         /* Synaptic weights */
local    : z ;              /* Prediction error signal */
output   : φ(z) ;                          /* Axon output */
when spike arrives on input x_k at time t do
    z ← −y + Σ_{m=1}^{n} ε w_m x_m ;              /* Compute error */
    w_k ← max{0, w_k − ε x_k z} ;           /* Update weights */
end
```

is essential for the functioning of the adaptive filter, as is visible in algorithms 1 and 2. This feedback is provided by the membrane potential v_m created by the total of the IPSC and EPSC currents passing through the impedance consisting of the membrane resistance R_m in parallel with the membrane capacitance C_m. The feedback signal accesses all synapses within the neuron via their connections to the soma. In the biological neuron as well, the propagation of this signal is nearly instantaneous due to its electrotonic conduction through the cytosol.

Weight updates: The adaptive filter updates its weights w_k by the product of the inputs x_k and the error feedback z. The update uses a clever trick which stands out when viewing the involved circuitry, *i.e.*, the plasticity circuitry of the excitatory synapse in fig. 7. The weight w is represented as a charge held by the capacitor C_w. The product of the input x and error z should update this weight. However, whereas the error is readily available in the circuit as the membrane potential v_m, the signal x on the glutamate pathway is PFM encoded and is unusable for the update in this form. Although it is lowpass filtered in the dendrite and soma, it is directly summed into the membrane potential and is unavailable separately. *Fortunately, a lowpass-filtered version of x is available as the calcium concentration* $[\mathrm{Ca}^{2+}]_\mathrm{e}$ *in the synaptic cleft*. Thanks to this additional copy of x, the NMDAR transistor in the circuit and the ion channel in the neuron can crucially "compute"—pass a charge proportional to—the weight update by multiplying the calcium concentration representing x with the membrane potential v_m representing z. Experiment 1, described below, validates the above process.

Redundant and linearly dependent candidate inputs: In engineering contexts, the decomposition of a signal x into components frequently relies on tech-

niques such as a bandpass-filter bank or a Fast Fourier Transform. These methods ensure orthogonality, or at least linear independence, of the components x_k. This independence is a critical requirement to guarantee the uniqueness of the weights. However, such a systematic decomposition may not be feasible from a biological perspective, resulting in identical reference input possibly giving rise to different sets of synaptic weights. In the case of redundant inputs, weights will converge towards a subspace rather than a specific point. Correlated inputs can potentially slow the convergence of the original LMS algorithm. This is because weights are updated simultaneously, which may lead to overshooting and oscillations. Here, evolution has provided an elegant solution for neurons because each synapse is updated individually and asynchronously by its own glutamate strobe signal (fig. 7), demonstrated in experiment 2 (cf. the "for" statement in algorithm 1 with the "when" statement in algorithm 2).

Implications of the neuron operating as an adaptive filter

The neuron behaving as an adaptive filter allows us to address the three key concerns brought up in the introduction: the engram process of memory storage and retrieval, the unification of Hebbian and homeostatic plasticity, and establishing a universal rule for synaptic plasticity. The proposed solutions to these problems are presented in the results section below. More generally, the adaptive filter provides a valuable conceptual model for understanding multi-neuron assemblies as it remains unaffected by the specifics of signal encoding, facilitating a succinct mathematical representation of the neurons.

The following subsection conducts a series of experiments that confirm the functioning of the circuit as an adaptive filter.

Experiment design

Two sets of experiments were carried out to explore and validate model properties.

In the first experiment, the stability and convergence of the model were examined. The neuron model was composed of one inhibitory synapse and two excitatory synapses ($n = 2$ in fig. 9). The task of the circuit was to determine the weights w_1 and w_2 so that the weighted sum of spiketrains 2 and 3 corresponded to spiketrain 1. The inputs were Pulse Frequency Modulated (PFM) spiketrains, effectively inhomogeneous Poisson processes, modulated by sine waves with a modulation depth of 67% (fig. 10). The modulations for the first experiment were 1 Hz and 2 Hz for spiketrains 2 and 3, respectively. The reference input, spiketrain$\tilde{1}$, began with a 1-Hz modulation but switched to 2 Hz after 150 s.

The second experiment aimed to study the model's behavior in the presence of redundant input. In this experiment, a 1-Hz sine wave modulated the inhibitory

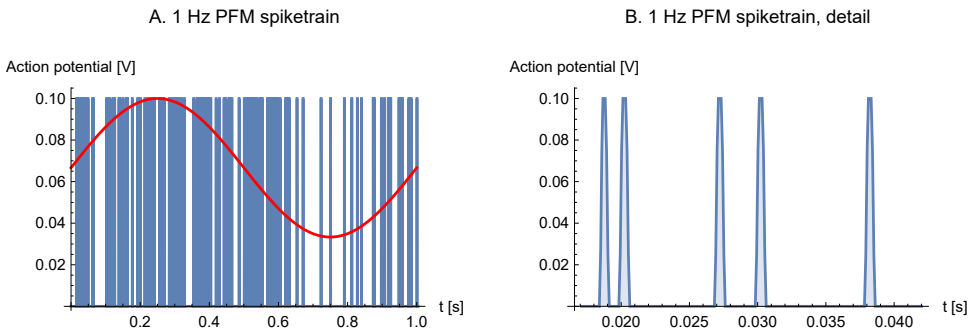

Figure 10: **Input signals.** A. Initial section of 1 Hz PFM spiketrain used as input. The overlaid sine wave shows the modulation signal. B. Detail. The spike width is 1 ms.

input, and a 2-Hz wave modulated the first excitatory input (x_1). The remaining five excitatory synapses $x_2, \ldots x_6$ ($n = 6$ in fig. 9) received redundant input. During the first run, these inputs were synchronized, receiving the same spiketrain modulated at 1 Hz. In the second run, spiketrains 3-7 were all modulated by 1 Hz but generated independently, mimicking the behavior of biological neurons, making them asynchronous.

The component values used in these experiments are provided in table 1, and they roughly align with physiological values. Regardless, the circuit is robust and not particularly sensitive to parameter variations. The experiments were conducted using an electronic-circuit simulator [24].

Results

Experiment results

The first experiment demonstrates the convergence of weights w_1 and w_2. Initially, with the inhibitory input signal y modulated by a 1 Hz sine wave, the ratio w_2/w_1 approaches zero as it should. This is because the input signal x_1 is also modulated by a 1 Hz sine wave, coinciding with the reference input, while the input signal x_2 is modulated by a 2 Hz sine wave, which is orthogonal to y. However, after 150 s, the modulation of y changes to 2 Hz, which instead coincides with the input signal x_2. This time, the inverse ratio w_1/w_2 approaches zero. Fig. 11A depicts this convergence for two different values of NMDAR gain γ_{NMDAR}. Here, low and high gain correspond to $3 \cdot 10^{-5} A/V^2$ and $10^{-4} A/V^2$, respectively. The diagram shows that the circuit strives to enhance the weight of the excitatory input that aligns in frequency with the inhibitory input, while concurrently decreasing the

Parameter	Value
E_{Na}	67 mV
E_{Ca}	129 mV
E_{Cl}	-90 mV
γ_{GABAAR}	10^{-7} A/V
$\gamma_{\mathrm{Ca_V}}$	10^{-8} A/V
γ_{AMPAR}	10^{-3} A/V^2
γ_{NMDAR}	$3 \cdot 10^{-5}$ A/V^2
C_h, C_{h1}, C_{h2}	10 nF
R_z, R_{z1}, R_{z2}, R_h	100 MΩ
C_i, C_e, C_s	100 pF
C_w	1 nF
R_i, R_e, R_s	1 GΩ
R_m	20 MΩ
C_m	500 pF

Table 1: **Model parameters.** The γ parameters denote ion channel (transistor) gains.

weight of the other excitatory input that doesn't match in frequency.

The second experiment shows what happens for multiple redundant excitatory inputs. In the first case, all the excitatory inputs are identical, so all strobe pulses are synchronous (dashed traces). In the second case, the same 2-Hz sine wave modulates the excitatory inputs, but otherwise, they are independent, so the strobe pulses are asynchronous (solid traces). The experiment shows faster convergence for asynchronous strobes.

Solutions to the three specific problems considered

This paper has suggested that a neuron functions and can be conceptualized as an adaptive filter with internal feedback. Such a neuron model enables straightforward solutions, presented below, to the three problems posed in the introduction.

1. How does the neuron manage engrams?

According to the adaptive-filter model, memories are stored as synaptic weights. More precisely speaking, if the information is input in the form of an inhibitory signal $y(t)$, the engram is formed in the neuron adaptating weights w_k so that y is balanced by the weighted sum $\Sigma_k w_k x_k$ of the excitatory signals $x_k(t)$. The memory can subsequently be recalled by temporarily setting the inhibitory input to zero,

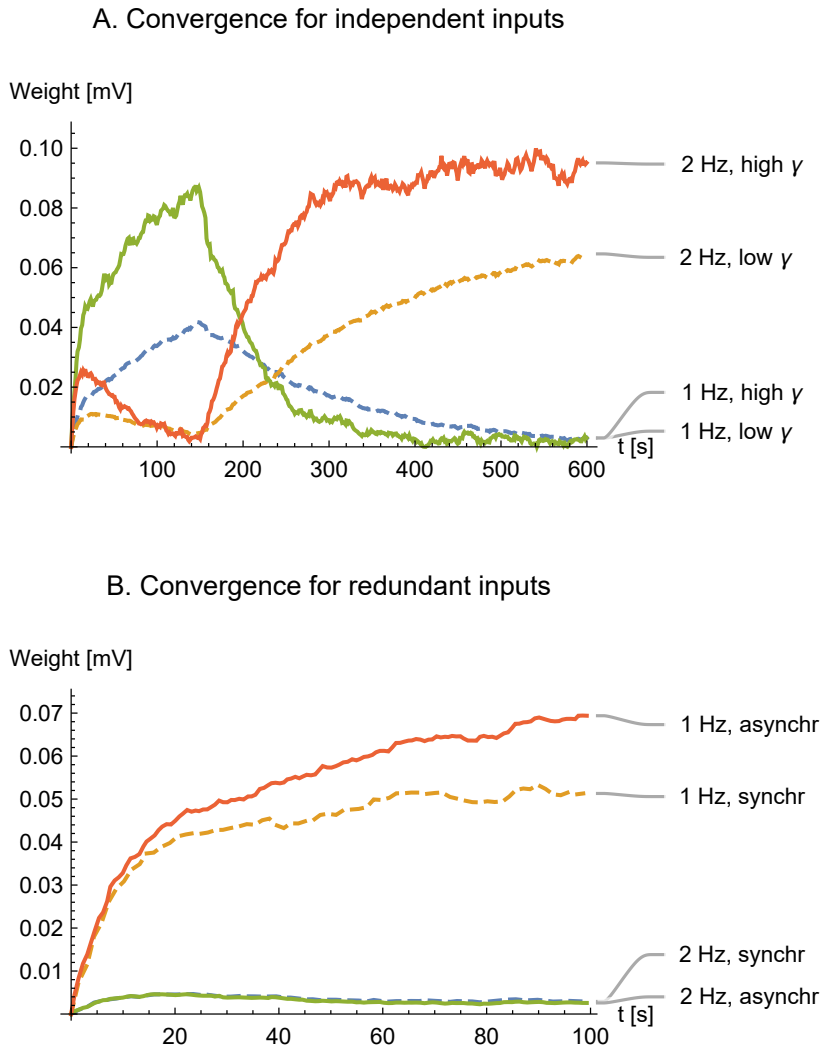

Figure 11: **Convergence and stability of weights.** A. Simulations show the convergence of the weights for two different values of NMDAR gain γ (dashed trace for $\gamma = 3 \cdot 10^{-5}\ AV^{-2}$ and solid for $\gamma = 10^{-4}\ AV^{-2}$). Modulation of the reference signal changed from 1 Hz to 2 Hz at $t = 150$s. B. Convergence for redundant inputs. The upper two traces show the sum $w_2 + w_3 + \ldots + w_6$, whereas the lower traces show w_1. Weights cannot be negative. Dashed and solid traces are shown for synchronous and asynchronous spiketrains, respectively.

whereby the neuron will output the approximation $\Sigma_k w_k x_k \approx y$ assembled by the same linear combination of excitatory signals.

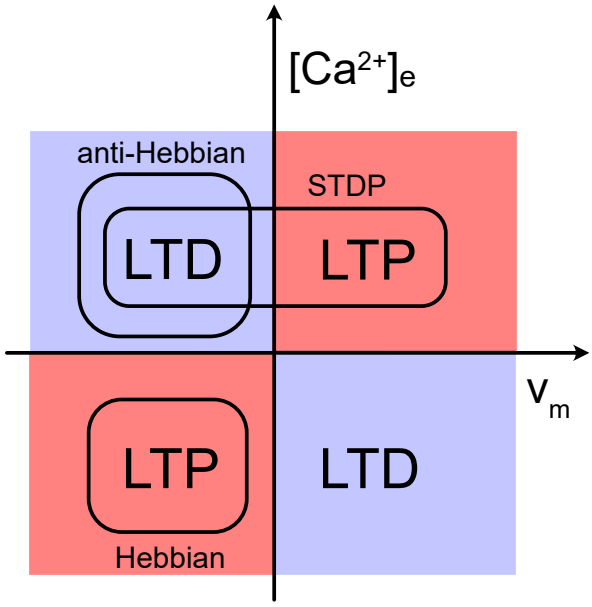

Figure 12: **Several update rules combined into one.** The LMS update subsumes multiple types of plasticity by one single rule. The axes measure deviation from homeostatic equilibrium. LTP = Long-Term Poetntiation, LTD = Long-Term Depression, STDP = Spike-Timing-Dependent Plasticity.

2. Is there a universal synaptic learning rule?

The synaptic learning rule can be succinctly expressed as the Least Mean Squares (LMS) learning rule, with the constraint that weights cannot be negative (cf. line 3 of algorithm 2):

$$w \leftarrow \max(0, w - \varepsilon z x). \tag{1}$$

In this equation, w denotes the number of AMPARs (synaptic weight), z represents the membrane potential v_m (error feedback), and x signifies the local synaptic cleft calcium concentration $[\mathrm{Ca}^{2+}]_\mathrm{e}$ (excitatory input). The learning rate ε depends on several biological parameters but is perhaps most directly controlled by the gain γ of the NMDAR.

3. How do homeostatic and Hebbian plasticity balance?

The Hebbian-homeostatic balance emerges from the synaptic learning rule (1), inherently providing stability and subsuming both Hebbian and homeostatic plasticity (fig. 12). The NMDAR directly implements the multiplication zx, and because the parameters x and z describe the deviations from the steady-state aver-

ages (homeostatic equilibria), the LMS rule offers automatic stabilization. In the case of spike-timing-dependent plasticity (STDP), the model indicates that "backwash" membrane potential fluctuations caused by the output spike will bias weight changes in favor of input spikes preceding output spikes.

Discussion

The neuron uses membrane potential feedback during adaptation to adjust the excitatory synapse weights. This adjustment strives to balance inhibitory and excitatory input. Alternatively, this process can be described as the neuron's attempt to predict the inhibitory input by excitatory input—the membrane potential encodes the *prediction error* [42]. Signal processing and control theory often refer to prediction error as the fundamental concept *innovation* [39; 10]. It has frequently been discussed in neuroscience under different names, including *novelty* [22], *saliency* [48], *decorrelation* [6], and *surprise* [8].

The critical operation for the plasticity of the neuron is the multiplication of the prediction error feedback z, represented by the membrane potential v_m, with the excitatory input x available from the synaptic cleft external calcium concentration $[\mathrm{Ca}^{2+}]_\mathrm{e}$. Given the existence of this non-linear multiply mechanism, linear mechanisms can adjust a suitable homeostatic equilibrium or zero offset (x_0, z_0) by processes such as voltage-gated calcium channels (zx_0) and metabotropic glutamate receptors (z_0x).

A minor difference between a neuron and an adaptive filter is that the neuron's weights cannot be negative. This restriction is not a severe limitation because feeding a candidate signal x together with its negation $-x$ achieves the same effect as a signed weight [6]. Conceivably, adding such negations could be one of the tasks performed by the local inhibitory neurons abundant in the CNS.

Two salient features distinguishing the proposed model are the explicit dynamics of the synaptic cleft and the dual-purpose utilization of glutamate for both direct information transfer and as a strobe signal that facilitates weight adjustment. The necessity for a strobe input arises from the fact that if NMDARs were continuously active, weights would be diluted towards zero, thereby resulting in information loss. It is crucial for plasticity that weights change only when there is meaningful input—that is, when activated by glutamate [18].

The circuit equivalent assumes NMDARs operate at the same speed as AMPARs. In reality, NMDARs are slower and produce a burst of openings when triggered by glutamate, effectively performing a kind of low-pass filtering. The model does not explicitly incorporate this property because the lowpass-filtered calcium input already accounts for the slowdown.

Several researchers have put forth adaptive filters as models for neuronal cir-

cuits in the cerebellum, utilizing *external* feedback [9; 50; 38]. Nevertheless, low-latency feedback is pivotal for the performance of an adaptive filter as it sets the maximum signal frequency content. External feedback is considerably slower than internal feedback by several orders of magnitude (for pyramidal neurons, see, for example, [29; 1]).

The idea of a neuron functioning as a self-contained adaptive filter has been hypothesized [31; 25]. However, to our knowledge, the model presented here is the first wholly mechanistic model based exclusively on the known properties of ion channels.

When interpreting the circuits in fig. 4 and fig. 7 from an electrical engineering perspective, it appears that evolution has crafted an elegant, robust, and minimalist solution. From a pure signal processing standpoint, the stability of neuronal functions strongly suggests the existence of feedback. The loop delay in this feedback must be short, pointing towards electrotonic propagation. Given that the output spikes are too infrequent to provide swift feedback, the membrane potential is the sole feasible choice. This idea served as the original inspiration for this paper, although the unavailability of the input parameter x from the glutamate pathway posed a challenge. However, the realization that x could also be obtained from the synaptic cleft, as confirmed by Borst and Sakmann's experiment [4], paved the way for the completion of the model.

The neuron appears to employ alternating current (AC) signals for differential signaling, while the direct current (DC) level is maintained to ensure an appropriate metabolic level. It is challenging to conceive a more compact arrangement of components capable of achieving such a sophisticated signal-processing function. The dual purpose of the glutamate pulse, serving as both PFM encoded input and strobe, is ingenious.

Widrow and Hoff [49] initially introduced the abstract, high-level neuron model ADALINE (short for ADAptive LInear NEuron), which drew inspiration from the McCulloch-Pitts neuron model [28]. This work predates the experimental discovery of ion channels by several years. Regrettably, Widrow and Hoff eventually discontinued their work on ADALINE as a neuron model. Nevertheless, it became the foundation of the adaptive filter, which experienced a dramatic expansion in theoretical advancements within the domain of signal processing.

The LMS learning rule is known under a variety of names in different contexts. In the field of artificial neural networks, it is often referred to as the "delta rule," whereas in statistical learning theory, as the "covariance rule." These names all refer to the same concept: an iterative method for adjusting the weights of a learning model to minimize the mean square error $||z||$ between the model's prediction, which is the weighted sum of x_k, and the actual data y.

This model does not include the process by which the neuron converts the membrane potential into the output spiketrain, including the activation function

because it has been comprehensively addressed in a recent publication, which mechanistically explains this output process [32]. The current paper can be seen as completing the picture by providing a mechanistic explanation of the input process—the conversion back to internal potential from spiketrains, including the plasticity.

Conclusions

Neuroscience research in many fields depends on detailed mechanistic knowledge of how neurons decode, process, store, and encode information. Examples of such fields are *neural implants*, *interoception*, and *artificial intelligence*, but progress in these fields has struggled with neuron models that have often been empirical and oversimplified.

This paper provides a complete mechanistic model including plasticity of a neuron's signal processing in the milliseconds-to-minutes range. The model explains mechanistically at the ion channel level how neurons convert input spiketrains to internal potential, including the adjustments of their synaptic efficacy. Crucial components of the model are the inclusion of synaptic cleft dynamics, the arrangement of internal feedback, and the multiple functions of the glutamate neurotransmitter. It is shown that the recording of an engram can be identified with the weight adjustments of an adaptive filter. The neuron strives to balance the inhibitory and excitatory inputs. After adaptation, it can be regarded as an inhibitory input predictor, delivering the prediction error as output.

The abstraction of the neuron as an adaptive filter constitutes an essential link between the cognitive level (memory) and the biological level (ion channels). It reduces the need for spiking-level simulations and thereby simplifies the understanding of large assemblies and networks of neurons.

Data availability statement: The datasets generated and analyzed during the current study are available from the author on reasonable request.

Acknowledgments

This research was funded in part by the European Commission FP7 project THE ("The Hand Embodied") under grant agreement 248587.

References

[1] S. D. Antic. Action potentials in basal and oblique dendrites of rat neocortical pyramidal neurons. *The Journal of Physiology*, 550(1):35–50, jul 2003. doi:10.1113/jphysiol.2002.033746.

[2] E. L. Bienenstock, L. N. Cooper, and P. W. Munro. Theory for the development of neuron selectivity: orientation specificity and binocular interaction in visual cortex. *The Journal of Neuroscience*, 2(1):32–48, jan 1982. doi:10.1523/jneurosci.02-01-00032.1982.

[3] T. V. P. Bliss and T. Lømo. Long-lasting potentiation of synaptic transmission in the dentate area of the anaesthetized rabbit following stimulation of the perforant path. *The Journal of Physiology*, 232(2):331–356, jul 1973. doi:10.1113/jphysiol.1973.sp010273.

[4] J. G. G. Borst and B. Sakmann. Depletion of calcium in the synaptic cleft of a calyx-type synapse in the rat brainstem. *The Journal of Physiology*, 521(1):123–133, nov 1999. doi:10.1111/j.1469-7793.1999.00123.x.

[5] C. F. Craver. When mechanistic models explain. *Synthese*, 153:355–376, 2006. doi:10.1007/s11229-006-9097-x.

[6] P. Dean, S. Anderson, J. Porrill, and H. Jörntell. An adaptive filter model of cerebellar zone C3 as a basis for safe limb control? *The Journal of Physiology*, 591(22):5459–5474, sep 2013. doi:10.1113/jphysiol.2013.261545.

[7] A. L. Dorrn, K. Yuan, A. J. Barker, C. E. Schreiner, and R. C. Froemke. Developmental sensory experience balances cortical excitation and inhibition. *Nature*, 465(7300):932–936, jun 2010. doi:10.1038/nature09119.

[8] K. Friston, J. Kilner, and L. Harrison. Free energy principle for the brain. *J Physiol Paris*, 100:70–87, 2006. doi:10.1016/j.jphysparis.2006.10.001.

[9] M. Fujita. Adaptive filter model of the cerebellum. *Biol Cybern*, 45(3):195–206, 1982. doi:10.1007/BF00336192.

[10] T. Glad and L. Ljung. *Control theory: multivariable and nonlinear methods*. Taylor & Francis, London, 2000.

[11] F. Gobbo and A. Cattaneo. Neuronal activity at synapse resolution: Reporters and effectors for synaptic neuroscience. *Frontiers in Molecular Neuroscience*, 13, oct 2020. doi:10.3389/fnmol.2020.572312.

[12] E. G. Gray. Axo-somatic and axo-dendritic synapses of the cerebral cortex: An electron microscope study. *J Anat*, 93:420–433, 1959. URL: http://www.ncbi.nlm.nih.gov/pmc/articles/PMC1244535.

[13] K. B. Hansen, L. P. Wollmuth, D. Bowie, H. Furukawa, F. S. Menniti, A. I. Sobolevsky, G. T. Swanson, S. A. Swanger, I. H. Greger, T. Nakagawa, C. J. McBain, V. Jayaraman, C.-M. Low, M. L. Dell'Acqua, J. S. Diamond, C. R. Camp, R. E. Perszyk, H. Yuan, and S. F. Traynelis. Structure, function, and pharmacology of glutamate receptor ion channels. *Pharmacological Reviews*, 73(4):1469–1658, oct 2021. doi:10.1124/pharmrev.120.000131.

[14] K. M. Harris and R. J. Weinberg. Ultrastructure of synapses in the mammalian brain. *Cold Spring Harb. Perspect. Biol.*, 4(a005587):1–30, feb 2012. doi:10.1101/cshperspect.a005587.

[15] S. Haykin and B. Widrow, editors. *Least-Mean-Square Adaptive Filters*. John Wiley & Sons, Inc., Hoboken, NJ, aug 2003. doi:10.1002/0471461288.

[16] S. S. Haykin. *Adaptive filter theory*. Prentice Hall, Upper Saddle River, N.J., 4. ed. edition, 2002.

[17] A. Hodgkin and A. Huxley. Currents carried by sodium and potassium ions through the membrane of the giant axon of Loligo. *J. Physiol.*, 116:449–472, 1952. doi:10.1113/jphysiol.1952.sp004717.

[18] R. L. Huganir and R. A. Nicoll. AMPARs and synaptic plasticity: The last 25 years. *Neuron*, 80(3):704–717, oct 2013. doi:10.1016/j.neuron.2013.10.025.

[19] S. A. Josselyn and S. Tonegawa. Memory engrams: Recalling the past and imagining the future. *Science*, 367(6473):eaaw4325, jan 2020. doi:10.1126/science.aaw4325.

[20] G. Kastellakis and P. Poirazi. Synaptic clustering and memory formation. *Frontiers in Molecular Neuroscience*, 12, dec 2019. doi:10.3389/fnmol.2019.00300.

[21] T. Keck, T. Toyoizumi, L. Chen, B. Doiron, D. E. Feldman, K. Fox, W. Gerstner, P. G. Haydon, M. Hübener, H.-K. Lee, J. E. Lisman, T. Rose, F. Sengpiel, D. Stellwagen, M. P. Stryker, G. G. Turrigiano, and M. C. van Rossum. Integrating Hebbian and homeostatic plasticity: The current state of the field and future research directions. *Philosophical Transactions of the Royal Society B: Biological Sciences*, 372(1715):20160158, mar 2017. doi:10.1098/rstb.2016.0158.

[22] T. Kohonen. *Associative Memory: A System-Theoretical Approach*. Springer, 1977. doi:10.1007/978-3-642-96384-1.

[23] J. Lisman. Glutamatergic synapses are structurally and biochemically complex because of multiple plasticity processes: long-term potentiation, long-term depression, short-term potentiation and scaling. *Philosophical Transactions of the Royal Society B: Biological Sciences*, 372(1715):20160260, mar 2017. doi:10.1098/rstb.2016.0260.

[24] LTspice XVII. *version 17.0.34.0 (64-bit)*. Analog Devices, Inc., Wilmington, MA, USA, 2022.

[25] A. Luczak, B. L. McNaughton, and Y. Kubo. Neurons learn by predicting future activity. *Nature Machine Intelligence*, 4(1):62–72, jan 2022. doi:10.1038/s42256-021-00430-y.

[26] S. G. Mallat and G. Peyré. *A wavelet tour of signal processing: the sparse way*. Elsevier/Academic Press, Burlington, Mass., 3rd edition, 2009.

[27] M. L. Mayer, G. L. Westbrook, and P. B. Guthrie. Voltage-dependent block by mg2+ of NMDA responses in spinal cord neurones. *Nature*, 309(5965):261–263, may 1984. doi:10.1038/309261a0.

[28] W. S. McCulloch and W. Pitts. A logical calculus of the ideas immanent in nervous activity (1943). *Bull Math Biol*, 52(1-2):99–115; discussion 73–97, 1990. doi:10.1007/BF02459570.

[29] B. Mihaljević, P. Larrañaga, and C. Bielza. Comparing the electrophysiology and morphology of human and mouse layer 2/3 pyramidal neurons with bayesian networks. *Frontiers in Neuroinformatics*, 15, feb 2021. doi:10.3389/fninf.2021.580873.

[30] O. Miry, J. Li, and L. Chen. The quest for the hippocampal memory engram: From theories to experimental evidence. *Frontiers in Behavioral Neuroscience*, 14, jan 2021. doi:10.3389/fnbeh.2020.632019.

[31] M. Nilsson. Neuronal "op-amps" implement adaptive control in biology and robotics. In M. Bianchi and A. Moscatelli, editors, *Human and Robot Hands: Sensorimotor Synergies to Bridge the Gap Between Neuroscience and Robotics*, chapter 6, pages 69–86. Springer International Publishing, Cham, 2016. doi:10.1007/978-3-319-26706-7_6.

[32] M. N. P. Nilsson and H. Jörntell. Channel current fluctuations conclusively explain neuronal encoding of internal potential into spike trains. *Phys. Rev. E*, 103:022407, Feb 2021. doi:10.1103/PhysRevE.103.022407.

[33] L. Nowak, P. Bregestovski, P. Ascher, A. Herbet, and A. Prochiantz. Magnesium gates glutamate-activated channels in mouse central neurones. *Nature*, 307(5950):462–465, feb 1984. doi:10.1038/307462a0.

[34] R. J. O'Brien, S. Kamboj, M. D. Ehlers, K. R. Rosen, G. D. Fischbach, and R. L. Huganir. Activity-dependent modulation of synaptic AMPA receptor accumulation. *Neuron*, 21(5):1067–1078, nov 1998. doi:10.1016/s0896-6273(00)80624-8.

[35] E. Oja. Simplified neuron model as a principal component analyzer. *Journal of Mathematical Biology*, 15(3):267–273, nov 1982. doi:10.1007/bf00275687.

[36] C. Ortega-de San Luis and T. J. Ryan. Understanding the physical basis of memory: Molecular mechanisms of the engram. *Journal of Biological Chemistry*, 298(5):101866, may 2022. doi:10.1016/j.jbc.2022.101866.

[37] F. Páscoa dos Santos and P. F. M. J. Verschure. Excitatory-inhibitory homeostasis and diaschisis: Tying the local and global scales in the post-stroke cortex. *Frontiers in Systems Neuroscience*, 15, jan 2022. doi:10.3389/fnsys.2021.806544.

[38] J. Porrill, P. Dean, and S. R. Anderson. Adaptive filters and internal models: Multilevel description of cerebellar function. *Neural Networks*, 47:134–149, 2013. doi:10.1016/j.neunet.2012.12.005.

[39] J. Proakis and D. Manolakis. *Digital Signal Processing*. Pearson Education, 4th edition, 2007.

[40] E. Sallard, D. Letourneur, and P. Legendre. Electrophysiology of ionotropic GABA receptors. *Cellular and Molecular Life Sciences*, 78(13):5341–5370, 2021. doi:10.1007/s00018-021-03846-2.

[41] A. H. Sayed. *Fundamentals of adaptive filtering*. Wiley, Hoboken, N.J., 2003.

[42] W. Schultz and A. Dickinson. Neuronal coding of prediction errors. *Annual Review of Neuroscience*, 23(1):473–500, 2000. PMID: 10845072. doi:10.1146/annurev.neuro.23.1.473.

[43] P. J. Sjöström. Grand challenge at the frontiers of synaptic neuroscience. *Frontiers in Synaptic Neuroscience*, 13, oct 2021. doi:10.3389/fnsyn.2021.748937.

[44] Y. J. Sun, G. K. Wu, B. hua Liu, P. Li, M. Zhou, Z. Xiao, H. W. Tao, and L. I. Zhang. Fine-tuning of pre-balanced excitation and inhibition during auditory cortical development. *Nature*, 465(7300):927–931, jun 2010. doi:10.1038/nature09079.

[45] S. F. Traynelis, L. P. Wollmuth, C. J. McBain, F. S. Menniti, K. M. Vance, K. K. Ogden, K. B. Hansen, H. Yuan, S. J. Myers, and R. Dingledine. Glutamate receptor ion channels: Structure, regulation, and function. *Pharmacological Reviews*, 62(3):405–496, aug 2010. doi:10.1124/pr.109.002451.

[46] G. G. Turrigiano. The dialectic of Hebb and homeostasis. *Philosophical Transactions of the Royal Society B: Biological Sciences*, 372(1715):20160258, mar 2017. doi:10.1098/rstb.2016.0258.

[47] G. G. Turrigiano, K. R. Leslie, N. S. Desai, L. C. Rutherford, and S. B. Nelson. Activity-dependent scaling of quantal amplitude in neocortical neurons. *Nature*, 391(6670):892–896, feb 1998. doi:10.1038/36103.

[48] V. van Polanen. Findings in haptic (re)search, 2014. ISBN: 978-94-6259-188-2.

[49] B. Widrow and M. E. Hoff. Adaptive switching circuits. In *IRE WESCON Convention Record*, pages 96–104, Los Angeles, CA, Aug. 1960. Institute of Radio Engineers, Institute of Radio Engineers. Part 4. doi:10.21236/ad0241531.

[50] D. M. Wolpert, R. C. Miall, and M. Kawato. Internal models in the cerebellum. *Trends in Cognitive Sciences*, 2:338–347, 1998. doi:10.1016/S1364-6613(98)01221-2.