Modulation of kinetic barriers under chemical constraints: a role for allostery in enzyme catalysis

Olivier Rivoire

Gulliver, CNRS, ESPCI, Université PSL, Paris, France.

Many enzymes undergo conformational changes and are allosteric, with catalytic activities depending on their conformation. We show how such allostery can be essential for overcoming limitations in catalytic efficiency due to a generic chemical constraint, the strong similarity between the different states that reactants adopt as they are chemically transformed from substrate to product. Focusing for clarity on single-step irreversible unimolecular reactions, we analyze different forms that chemical similarities between reactant states can take, and derive in each case the limitations that they impose on catalytic efficiency. We first consider catalysts with no internal degree of freedom, and then show how catalysts with a particular form of two-state allostery can overcome their limitations. Our results confer a fundamental role to conformational changes as a means to specifically stabilize transition states, and therefore ensure efficient catalysis. They also clarify previous explanations regarding the contribution of substrate "handles", parts of substrates that are not chemically transformed but whose interactions with enzymes can be critical to catalysis. Additionally, we present links to studies in heterogeneous catalysis, where limitations arising from chemical similarities between reactant states pose well-known challenges.

I. INTRODUCTION

Two widespread but puzzling features distinguish enzymes from chemical catalysts such as small molecules or large solid surfaces. First, many enzymes undergo conformational changes on the same timescale as catalysis [1–3], but the role of these conformational changes in catalysis is much debated [4–6], because our mechanistic understanding of chemical processes suggest that rigid active sites provide optimal environments for chemical transformations [7, 8]. Second, many enzymes catalyze reactions in which the reactant comprises a "handle", i.e., a non-reactive part that is not transformed chemically but whose interaction with the enzyme is critical to efficient catalysis [9]. Examples include phosphate groups in glycolysis [10], coenzyme A in fatty acid metabolism [11], and amino acid chains extending the cleaved peptide bond in proteolysis [12]. The contribution to catalysis of these handles is not obvious given Pauling principle [13] that explains catalysis by a specific stabilization of transition states. Since these handles are unchanged, they indeed bind uniformly to substrates and transition states. For multi-molecular reactions, they can contribute to catalysis by bringing and keeping together multiple substrates, but substrate handles are as common in the enzymatic catalysis of unimolecular reactions where this mechanism of catalysis by proximity cannot be invoked [14].

Several unrelated explanations have been proposed to explain conformational changes and substrate handles in enzymatic catalysis. One class of explanations view conformational changes as a means to achieve conflicting geometrical requirements. For instance, a catalytic transformation may be optimized by totally surrounding the reactant with the enzyme, which is incompatible with binding and release [15, 16]. Or, multiple transitions states may be present along the chemical transformation, each requiring a different geometry [17, 18]. Other types of constraints have also been invoked, including demands for substrate specificity, as in the induced-fit model [19, 20], or for regulation, as in many models of allostery [21]. Similarly, several explanations have been proposed for the role of substrate handles. For

instance, phosphate groups on many metabolites are justified by the negative charge that they confer, which prevents metabolites to which they are attached from diffusing outside cells [22]. More generally, however, two proposals were made in the 1970s that directly link substrate handles to catalytic efficiency, both based on the fundamental principle that catalysis relies on the capacity to bind differentially the substrate(s) and the transition state(s).

One proposal is due to Albery and Knowles and arises from their extensive study of triosephosphate isomerase [23], a very efficient enzyme that catalyzes an essential unimolecular reaction in glycolysis, the conversion between two triosephospate isomers that harbor the same phosphate handle. Albery and Knowles classified binding mechanisms contributing to catalysis by the degree of discrimination that they can achieve, considering first less discriminative mechanisms which they viewed as evolutionarily more accessible [24]. From this standpoint, uniform binding to a substrate handle, which does not achieve any discrimination, is the easiest mechanism to evolve. Next, they considered the possibility of further improvement through "differential binding" where the binding affinity to a transition states is constrained to be intermediate between the binding affinities of the two states preceding and following it. Finally, they considered improvements through the most general possibility of arbitrary binding to each state, which they called "catalysis of elementary steps". For triosephosphate isomerase, they argued that uniform binding through the phosphate handle is responsible for most of the improvement over catalysis by a simpler carboxylate base, with differential binding and catalysis of elementary steps making only smaller additional contributions [24]. In their model, a key assumption is that catalysis is present without the handle, and a key variable is the ambient substrate concentration. The increased binding affinity provided by the handle indeed acts to retain the substrate close to the active site until it is chemically transformed, but does not change the activation barrier for the chemical transformation itself. Only for sufficiently low substrate concentrations, when substrate unbinding is limiting, is their model therefore relevant.

In terms of Michaelis-Menten kinetics, uniform binding to the substrate handle increases catalytic efficiency in this first scenario by reducing the Michaelis constant K_M without affecting the catalytic constant k_{cat}. In many cases, however, altering the interaction of the enzyme with the handle has the very opposite effect: K_M is unchanged but k_{cat} is reduced [9]. This puzzling observation motivated Jencks to elaborate a radically different explanation for the ubiquity of substrate handles. Most relevant to our focus on catalytic efficiency in the context of unimolecular reactions is his proposal that the discrimination between a substrate and the transition state can be mainly achieved by destabilizing the substrate rather than by stabilizing the transition state [9, 25]. In this view, the role of the handle is to provide sufficient negative interaction free energy to compensate for the positive free energy involved in substrate destabilization. In Jencks' words, substrate handles provide a large "intrinsic binding energy" which is not apparent in measured binding energies but is "used as the currency to pay for substrate destabilization" [9]. In contrast to Albery and Knowles' proposal, Jencks' proposal is therefore independent of the substrate concentration and does involve a lowering of the activation barrier for the chemical transformation. His proposal finds support in several case studies [26, 27], including studies of triosephosphate isomerase [28]. However, the conditions under which substrate destabilization is preferable over transition-state stabilization, and the extent to which it can contribute to catalysis have never been formally established.

This constitutes another difference with Albery and Knowles' proposal, which rests on the quantitative analysis of a model that makes explicit an optimality criterion and the constraints under consideration. Albery and Knowles' formalism, which views catalysis as a modulation of free energy profiles in the graphical form of kinetic barrier diagrams [29], is widely used [30–35]. Here, we adopt this formalism to extend their analysis to new constraints and to catalysts that can exist in multiple conformations. Focusing on unimolecular reactions for clarity and because they pose the most significant challenges to explain substrate handles [14], we first derive limits on the cycling time of catalysts that exist only in one conformation. We then show that allostery, defined as the capacity of a catalyst to have different affinities for a same ligand when occupying different conformational states [36], can lift some of these

limitations. This provides a general formulation of a principle that we previously illustrated with a minimal physics model [37], and which may also be viewed as a formalization of Jencks' mechanism of substrate destabilization [9]. By integrating Jencks' and Albery and Knowles' explanations in a common formalism, the relation and difference between these two explanations for the role of substrate handles are thus clarified. Besides, we make a link to heterogeneous catalysis where chemical constraints have been particularly studied and where the limitations on catalytic efficiency that they imply raise well-recognized challenges [38, 39].

II. MODEL AND METHODS

A. Spontaneous reaction

We consider for simplicity a unimolecular reaction described by a single-step mechanism,

$$S \underset{k_{-0}}{\overset{k_0}{\rightleftharpoons}} P \tag{1}$$

where S represents the substrate, P the product, k_0 the first-order rate constant for the forward reaction and k_{-0} the first-order rate constant for the reverse reaction. The rate of product formation is then $v_0 = \partial[P]/\partial t = -\partial[S]/\partial t = k_0[S] - k_{-0}[P]$ where $[S]$ and $[P]$ are, respectively, the concentrations of substrate S and product P. To model a cellular context, we study this reaction in a non-equilibrium steady state where these concentrations are maintained at fixed values.

To reason about catalysis, it is convenient to consider (free) energies rather than rates [34]. We therefore introduce a parametrization of the two rates $k_{\pm 0}$ by two free energies, an activation free energy $\Delta G^{\ddagger}_{\text{uncat}} \geq 0$ and a free energy of formation of one molecule $\Delta G^{\text{o}}_{\text{reac}}$ such that

$$k_0 = Ae^{-\Delta G^{\ddagger}_{\text{uncat}}/RT}, \qquad k_{-0} = Ae^{-(\Delta G^{\ddagger}_{\text{uncat}} - \Delta G^{\text{o}}_{\text{reac}})/RT}, \tag{2}$$

where R is the universal gas constant, T the temperature, and A a frequency factor ($A = k_B T/h$ in transition state theory, k_B being Boltzmann constant and h Planck constant). To simplify the formulas, we set the unit of energy to have $RT = 1$ and the unit of time to have $A = 1$. The two quantities $\Delta G^{\ddagger}_{\text{uncat}}$ and $\Delta G^{\text{o}}_{\text{reac}}$ are, by definition, independent of the concentrations of S and P. $\Delta G^{\ddagger}_{\text{uncat}} \geq 0$ represents a positive activation energy for the forward reaction $S \to P$ while $\Delta G^{\text{o}}_{\text{reac}}$ is a free energy of formation related to the equilibrium constant $K_{\text{eq}} = k_0/k_{-0}$ by $K_{\text{eq}} = e^{-\Delta G^{\text{o}}_{\text{reac}}}$ (note that we define $\Delta G^{\text{o}}_{\text{reac}}$ *per molecule* rather than *per mole* as more common in chemistry). It is also convenient to introduce the free energy of reaction ΔG_{reac} when the substrate and product concentrations are fixed to the arbitrary values $[S]$ and $[P]$,

$$\Delta G_{\text{reac}} = \Delta G^{\text{o}}_{\text{reac}} + \ln \frac{[P]}{[S]}. \tag{3}$$

$\Delta G^{\text{o}}_{\text{reac}}$ can be of any sign, and we only need to impose $\Delta G^{\text{o}}_{\text{reac}} < \Delta G^{\ddagger}_{\text{uncat}}$ for the reverse reaction $P \to S$ to have a positive activation energy, and therefore for the two states S and P to be well defined. These parameters for the spontaneous reaction are represented in a kinetic barrier diagram [29, 33] with three states, the two stable states S and P, whose levels differ by $\Delta G^{\text{o}}_{\text{reac}}$, and a transition state $S^{\ddagger}$ whose level differs from that of S by $\Delta G^{\ddagger}_{\text{uncat}}$ (Fig. 1A).

For clarity, we make two further simplifying assumptions: no product is present, $[P] = 0$, and the reaction is irreversible, $k_{-0} = 0$ or, equivalently, $\Delta G^{\text{o}}_{\text{reac}} = -\infty$ (a generalization to arbitrary $\Delta G^{\text{o}}_{\text{reac}}$ is presented in SI). These assumptions imply that the rate of product formation due to the spontaneous reaction is simply $v_0 = k_0[S]$.

B. Catalysis

Catalysis occurs if a substrate is converted more quickly in the presence than in the absence of a substance – the catalyst – which is left unchanged in the process. We first consider a catalyst C with no internal degree of freedom that follows a catalytic cycle with two intermediate states, described by a Markov chain of the form

$$C + S \underset{k_{-1}}{\overset{k_1}{\rightleftharpoons}} CS \underset{k_{-2}}{\overset{k_2}{\rightleftharpoons}} CP \underset{k_{-3}}{\overset{k_3}{\rightleftharpoons}} C + P \tag{4}$$

where $k_1 = k_D[S]$ and $k_{-3} = k_D[P]$ are pseudo-first-order rate constants that depend on the ambient concentrations of substrate and product and on a diffusion rate constant k_D, while the other rates $k_{\pm i}$ are first-order rate constants that depend on properties of the catalyst.

We take the mean time T_c to complete one catalytic cycle, i.e., to reach $C+P$ from $C+S$ in Eq. (4), as a measure of catalytic efficiency. The smaller the cycling time T_c, the more efficient catalysis. In conditions where $[P] = 0$, this cycling time is equivalent to the catalytic efficiency y introduced by Albery and Knowles [40]. If, furthermore, the contribution of the spontaneous reaction to the rate of product formation, $v = \partial[P]/\partial t$, is negligible, T_c is equivalent to $[C]/v$, where $[C]$ is the total concentration of free and bound catalysts [41, 42]. For the catalytic cycle described by Eq. (4), the rate of product formation follows Michaelis-Menten equation, $v = k_{\text{cat}}[S][C]/(K_M + [S])$ [43], and we can therefore express the dependence of T_c on the substrate concentration $[S]$ in terms of a catalytic constant k_{cat} and a Michaelis constant K_M, as

$$T_c = \frac{1}{k_{\text{cat}}}\left(1 + \frac{K_M}{[S]}\right) \tag{5}$$

where, for the catalytic cycle described by Eq. (4) (see SI 1 or [24]),

$$\frac{1}{k_{\text{cat}}} = \frac{1}{k_2} + \frac{1}{k_3} + \frac{k_{-2}}{k_2 k_3} \tag{6}$$

and

$$\frac{K_M}{k_{\text{cat}}} = \frac{1}{k_D}\left(1 + \frac{k_{-1}}{k_2} + \frac{k_{-1}k_{-2}}{k_2 k_3}\right). \tag{7}$$

We assumed here $N = 2$ intermediate states, CS and CP, but Eq. (5) extends to unidimensional chains of transitions with an arbitrary number N of intermediate states, with appropriate redefinitions of k_{cat} and K_M (see SI 1).

Since T_c quantifies the time to complete a catalytic cycle with no reference to the spontaneous reaction, its value does not reveal if catalysis is taking place, i.e., if the reaction in the presence of the catalyst is faster than in its absence. In particular, as T_c represents a turn-over time *per catalyst*, it is *not* comparable to the mean spontaneous reaction time $1/k_0$ *per substrate*. To assess the presence of catalysis, we must either compare the reaction time $1/k_0$ *per substrate* in the absence of catalysts to another reaction time in the presence of catalysts, or compare the cycling time T_c *per catalyst* in the presence of the catalyst of interest to a another cycling time where the catalyst is substituted for an inactive substance. The two approaches lead to the same simple criterion valid for any number N of intermediate states: catalysis occurs if and only if $k_0 < k_{\text{cat}}$, where k_{cat} is the catalytic constant in Eq. (5). Remarkably, this criterion is independent of K_M, whose value impacts the cycling time T_c but has no bearing on the occurence of catalysis *per se* [42].

As for the spontaneous reaction, we can re-parametrize the elementary rates $k_{\pm i}$ in Eq. (4) with free energies and represent the catalytic process in a kinetic energy diagram. To this end, each transition is associated with a transition state. The first transition $C + S \underset{k_{-1}}{\overset{k_1}{\rightleftharpoons}} CS$ is associated with a first transition state ($i = 1$) denoted $C{\cdot\cdot}S$ to represent a substrate just about to bind to the catalyst. The second transition $CS \underset{k_{-2}}{\overset{k_2}{\rightleftharpoons}} CP$ is associated with a second transition state ($i = 2$) denoted $CS^{\ddagger}$ to represent

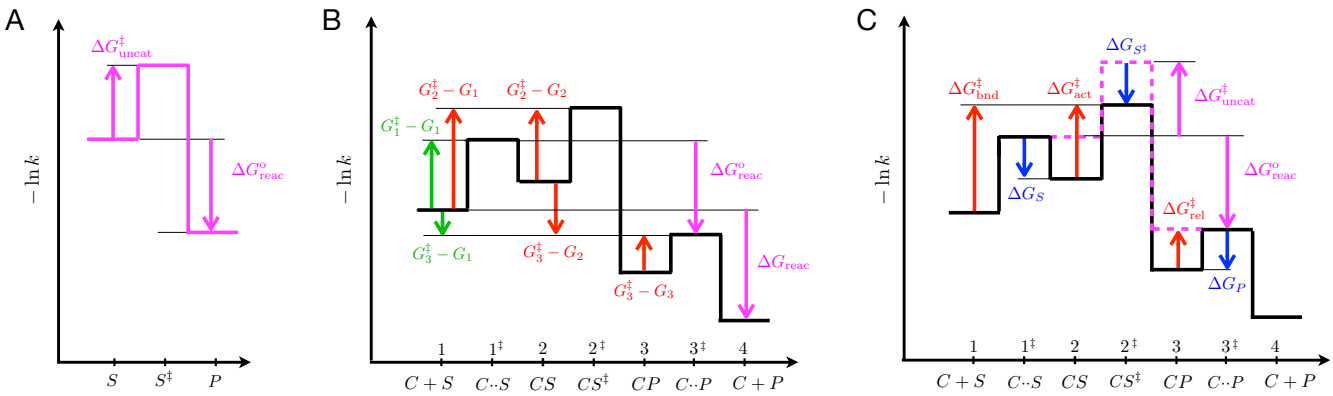

FIG. 1: Kinetic barrier diagrams. **A.** Diagram for the spontaneous reaction $S \rightleftharpoons P$, described by two stable states, S and P, a transition state, $S^{\ddagger}$, and two parameters, an activation barrier $\Delta G^{\ddagger}_{\rm uncat}$ and a reaction barrier $\Delta G^{\rm o}_{\rm reac}$. Here $\Delta G^{\rm o}_{\rm reac} < 0$ but $\Delta G^{\rm o}_{\rm reac} = -\infty$ if considering an irreversible reaction (more generally, $\Delta G^{\rm o}_{\rm reac}$ can be of any sign as long as $\Delta G^{\ddagger}_{\rm uncat} + \Delta G^{\rm o}_{\rm reac} < 0$). **B.** Diagram for the catalytic process described by Eq. (4). The stable states, $C+S$, CS, CP and $C+P$ are represented as local minima with energies G_i $(i = 1, 2, 3, 4)$, separated by transition states $C{\cdot\cdot}S$, $CS^{\ddagger}$ and $C{\cdot\cdot}P$, with energies $G^{\ddagger}_i$ $(i = 1, 2, 3)$. The heights of the barriers represent the transition rates. For instance, the rate from CS to CP is $k_2 = e^{G^{\ddagger}_2 - G_2}$ while the reverse rate from CP to CS is $k_{-2} = e^{G^{\ddagger}_2 - G_3}$. The cycling time T_c expressed in Eq. (9) depends on the forward barriers between successive states, $G^{\ddagger}_i - G_i$, as well as on the forward barriers between non-successive states $G^{\ddagger}_j - G_i$ with $j > i$. In total, this corresponds to the 6 barriers represented by green or red arrows. Of these 6 barriers, 2 are set by extrinsic parameters independent of the catalyst (in green) and 4 are modulated by parameters intrinsic to the catalyst (in red). Some barriers may have negative values (downward-pointing arrows) and therefore not constitute barriers *stricto sensu*. In particular, $G_3 - G^{\ddagger}_2 \to -\infty$ when the reaction is irreversible. Note also that $G_4 \to -\infty$ when products are maintained at vanishing concentration. **C.** When considering irreversible reactions, only 3 barriers are dependent on properties of the catalyst, $\Delta G^{\ddagger}_{\rm bnd}, \Delta G^{\ddagger}_{\rm act}, \Delta G^{\ddagger}_{\rm rel}$, represented by the 3 red arrows. We describe the properties of the catalyst by three intrinsic parameters, $\Delta G_S, \Delta G_{S^{\ddagger}}, \Delta G_P$, represented by the 3 blue arrows. They are defined by making a comparison with a non-interacting catalyst which differs from an interacting catalyst in the internal section of the diagram, where its profile is that of the spontaneous reaction (pink dotted lines).

the transition-state-catalyst complex. The third transition $CP \underset{k_{-3}}{\overset{k_3}{\rightleftharpoons}} C + P$, finally, is associated with a third transition state $(i = 3)$ denoted $C{\cdot\cdot}P$ to represent a product just about to be released from the catalyst. We define free energies G_i for the stable states ($i = 1$ for $C+S$, $i = 2$ for CS, $i = 3$ for CP and $i = 4$ for $C+P$) and $G^{\ddagger}_i$ for the transition states $(i = 1, 2, 3)$, so that

$$k_i = e^{-(G^{\ddagger}_i - G_i)}, \qquad k_{-i} = e^{-(G^{\ddagger}_i - G_{i+1})}, \tag{8}$$

which allows the catalytic cycle of Eq. (4) to be represented by a kinetic barrier diagram (Fig. 1B) [29, 33]. In this diagram, the energy difference between the last state $C+P$ and the first state $C+S$ coincides with the free energy change $\Delta G_{\rm rea}$ defined in Eq. (3) (due to the assumption that the substrate and the product have same diffusion constant k_D).

In terms of these free energies, the cycling time T_c takes, when assuming $[P] = 0$, a simple form (see SI 1 or [34]),

$$T_c = \sum_{1 \le i \le j \le N+1} e^{G^{\ddagger}_j - G_i}, \tag{9}$$

where the sum is over each pair $i \leq j$ of transition state j following a stable state i. Typically, one term dominates the sum and $T_c \simeq e^{\Delta G_{\rm span}}$ where $\Delta G_{\rm span} = \max_{1\leq i\leq j\leq N+1}(G_j^\ddagger - G_i)$ is known as the energetic span [34]. We shall work in this approximation where estimating the cycling time amounts to estimating the limiting barrier $G_j^\ddagger - G_i$ that determines the energetic span $\Delta G_{\rm span}$. Importantly, this limiting barrier is not necessarily associated with a limiting step ($i = j$) but can involve a transition state that does not follow immediately the intermediate state ($i < j$). When $N = 2$, $(N + 1)(N + 2)/2 = 6$ barriers, represented by the 6 vertical arrows in Fig. 1B, have to be compared to determine which is largest. Some of these barriers, however, may have negative values and be therefore negligible. When considering an irreversible reaction, or more generally when considering as in Fig. 1B a reaction with a large activation barrier for the reverse reaction, this is the case of the two barriers $G_3^\ddagger - G_1$ and $G_3^\ddagger - G_2$, represented in Fig. 1B by downward-pointing arrows.

Similarly to T_c, the catalytic constant $k_{\rm cat}$ that defines whether catalysis is present (if $k_{\rm cat} > k_0$) is given by

$$\frac{1}{k_{\rm cat}} = \sum_{2\leq i\leq j\leq N+1} e^{G_j^\ddagger - G_i} \simeq e^{\max_{2\leq i\leq j\leq N+1}(G_j^\ddagger - G_i)}. \tag{10}$$

With $N = 2$ intermediate states, $k_{\rm cat}$ is therefore determined by the largest of $N(N + 1)/2 = 3$ barriers.

C. Intrinsic and extrinsic barriers

When considering constraints on catalytic efficiency, an important distinction is between intrinsic barriers which depend on properties of the catalyst (in green in Fig. 1), and extrinsic barriers which do not (in red in Fig. 1), and depend instead exclusively on the parameters $\Delta G^\ddagger_{\rm uncat}$ and $\Delta G^{\rm o}_{\rm reac}$ of the spontaneous reaction and on the ambient concentrations $[S]$ and $[P]$. In the catalysis of an irreversible reaction with no product and $N = 2$ intermediates, only three barriers are intrinsic and non-negative, represented by the three red upward-pointing arrows in Fig. 1B. Given the essential role of these barriers in what follows, it is convenient to give them short names (Fig. 1C),

$$\begin{aligned} \Delta G^\ddagger_{\rm bnd} &= G_2^\ddagger - G_1, \\ \Delta G^\ddagger_{\rm act} &= G_2^\ddagger - G_2, \\ \Delta G^\ddagger_{\rm rel} &= G_3^\ddagger - G_3. \end{aligned} \tag{11}$$

$\Delta G^\ddagger_{\rm bnd}$ is a binding barrier controlling the transition $C+S \to CP$, and is all the higher that the substrate concentration is lower (small G_1) and the activation energy is higher (large G_2). $\Delta G_{\rm act}$ is an activation barrier for the chemical transformation in presence of the catalyst, controlling the transition $CS \to CP$. $\Delta G^\ddagger_{\rm rel}$, finally, is associated with product release, and controls the transition $CP \to C + P$.

With these notations, Eq. (9) can be rewritten as

$$T_c = T_{\rm ext} + e^{\Delta G^\ddagger_{\rm bnd}} + e^{\Delta G^\ddagger_{\rm act}} + e^{\Delta G^\ddagger_{\rm rel}} \simeq T_{\rm ext} + e^{\max(\Delta G^\ddagger_{\rm bnd}, \Delta G^\ddagger_{\rm act}, \Delta G^\ddagger_{\rm rel})} \tag{12}$$

where $T_{\rm ext}$ a lower bound on the cycling time that is set by the extrinsic parameters and is therefore independent of the catalyst itself; for irreversible reactions, $T_{\rm ext}$ is simply the mean time needed for a substrate to diffuse towards a catalyst. Similarly,

$$\frac{1}{k_{\rm cat}} = e^{\Delta G^\ddagger_{\rm act}} + e^{\Delta G^\ddagger_{\rm rel}} \simeq e^{\max(\Delta G^\ddagger_{\rm act}, \Delta G^\ddagger_{\rm rel})}. \tag{13}$$

D. Intrinsic parameters

If the three intrinsic barriers $\Delta G^\ddagger_{\rm bnd}$, $\Delta G^\ddagger_{\rm act}$, $\Delta G^\ddagger_{\rm rel}$ can be lowered arbitrarily, perfect catalysis with a minimal cycling time $T_c = T_{\rm ext}$ is achievable. The difficulties for a catalyst to discriminate between the

reactant states S, $S^\ddagger$ and P (Fig. 1A) may, however, prevent this optimum to be reached. To analyze the trade-offs at play, we need to relate the three intrinsic barriers $\Delta G^\ddagger_{\rm bnd}$, $\Delta G^\ddagger_{\rm act}$, $\Delta G^\ddagger_{\rm rel}$ to physical parameters reporting the affinity of the catalyst to the three reactant states.

To this end, we take as reference a non-interacting catalyst subject to the same extrinsic conditions. By definition, its kinetic barrier diagram differs only in its internal section, as represented by the pink dotted lines in Fig. 1C: it has an activation barrier identical to that of the spontaneous reaction ($\Delta G^\ddagger_{\rm act} = \Delta G^\ddagger_{\rm uncat}$), no barrier for release ($\Delta G^\ddagger_{\rm rel} = 0$), and a binding barrier entirely controlled by diffusion ($\Delta G^\ddagger_{\rm bnd} = -\ln(k_D[S])$). An actual catalyst differs from this non-interacting catalyst by the extent to which the free energies of the three states CS, $CS^\ddagger$ and CP are lowered, which we quantify with the three intrinsic parameters ΔG_S, $\Delta G_{S^\ddagger}$ and ΔG_P represented by blue arrows in Fig. 1C. These three parameters, which can be thought as binding free energies are, by definition, independent of reactant concentrations and have necessarily negative values.

In terms of the three intrinsic parameters ΔG_S, $\Delta G_{S^\ddagger}$, ΔG_P, the three intrinsic barriers controlling T_c are given by

$$\begin{aligned} \Delta G^\ddagger_{\rm bnd} &= -\ln(k_D[S]) + \Delta G^\ddagger_{\rm uncat} + \Delta G_{S^\ddagger}, \\ \Delta G^\ddagger_{\rm act} &= \Delta G^\ddagger_{\rm uncat} + \Delta G_{S^\ddagger} - \Delta G_S, \\ \Delta G^\ddagger_{\rm rel} &= -\Delta G_P. \end{aligned} \tag{14}$$

We use below these expressions to study how the limiting barrier $\max(\Delta G^\ddagger_{\rm bnd}, \Delta G^\ddagger_{\rm act}, \Delta G^\ddagger_{\rm rel})$ in Eq. (12) is minimized as ΔG_S, $\Delta G_{S^\ddagger}$ and ΔG_P are varied.

E. Conditions and fundamental limits to catalysis

From Eqs. (2) and (13), it follows that catalysis ($k_{\rm cat} > k_0$) requires $\max(\Delta G^\ddagger_{\rm act}, \Delta G^\ddagger_{\rm rel}) < \Delta G^\ddagger_{\rm uncat}$, which, given Eq. (14), corresponds to

$$\begin{aligned} \Delta G_{S^\ddagger} &< \Delta G_S, \\ \Delta G_P &> -\Delta G^\ddagger_{\rm uncat}. \end{aligned} \tag{15}$$

The first condition embodies Pauling principle [44]: the catalyst must bind more strongly to the transition state than to the substrate to reduce the activation energy. The second condition imposes the product not to bind too strongly, to allow for efficient product release. Neither minimizing each of the three barriers in Eq. (14) nor satisfying Eq. (15) involve any trade-off: minimizing $\Delta G_{S^\ddagger}$ while maximizing ΔG_S and ΔG_P contributes to minimize each barrier in Eq. (14) and permit to satisfy Eq. (15). In this model, the maximal value of $k_{\rm cat}$ ($k_{\rm cat} = 2$) is for instance achieved with $\Delta G_S = 0$, $\Delta G_{S^\ddagger} = -\Delta G^\ddagger_{\rm uncat}$, $\Delta G_P = 0$. This limit corresponds to so-called perfect catalysis, where the limiting process is the diffusion of a substrate towards a catalyst [40].

III. CONSTRAINTS AND LIMITATIONS ON SINGLE-STATE CATALYSIS

We propose to understand general design principles of enzymes as arising from generic but non-thermodynamical constraints to which the parameters ΔG_S, $\Delta G_{S^\ddagger}$ and ΔG_P are subject. We ignore constraints from geometry, specificity or regulation, and focus instead on constraints arising from the chemical similarity of the three reaction states S, $S^\ddagger$ and P. We model these constraints by imposing a positive correlation between ΔG_S, $\Delta G_{S^\ddagger}$ and ΔG_P. First, we follow Albery and Knowles and re-analyze the cases of uniform binding, where the three free energies are imposed to be the same, and of differential binding, where $\Delta G_{S^\ddagger}$ is assumed to lie between ΔG_S and ΔG_P [24]. Next, we introduce and justify a

new type of constraint that we call discriminative binding, where the specificity to the transition state $\Delta G_{S^\ddagger} - \Delta G_S$ is positively correlated to the affinities to the substrate and product ΔG_S and ΔG_P. Two other constraints are also analyzed in SI, one capturing the notion of substrate destabilization in enzymology [25] and another capturing the scaling laws observed in heterogeneous catalysis [45, 46]. Throughout this section, we assume single-state catalysts described by Eq. (4) before analyzing in the next section the benefit of catalysts with an internal degree of freedom and allosteric properties.

A. Single-state uniform binding

The most restrictive constraint is to assume uniform binding, where the interaction between the reactant and the catalyst is independent of the state of the reactant and described by a single parameter $\Delta G_u \leq 0$, such that

$$\Delta G_S = \Delta G_{S^\ddagger} = \Delta G_P = \Delta G_u. \tag{16}$$

This constraint represents, in particular, the interaction of an enzyme with a non-reactive substrate handle, which is independent of the chemical state of the reactive part of the substrate. Since catalysis ($k_{\text{cat}} > k_0$) requires $\Delta G^\ddagger_{\text{uncat}} < \Delta G^\ddagger_{\text{act}}$ and since uniform binding leaves $\Delta G^\ddagger_{\text{uncat}}$ unchanged [see Eq. (14)], such uniform binding cannot confer catalysis [14]. As proposed by Albery and Knowles [24], it can, however, be beneficial when complementing a pre-existing catalytic mechanism. Adding uniform binding $\Delta G_u \leq 0$ to a pre-existing catalytic mechanisms with intrinsic barriers $\Delta G^{\ddagger *}_{\text{bnd}}$, $\Delta G^{\ddagger *}_{\text{bnd}}$ and $\Delta G^{\ddagger *}_{\text{rel}}$ indeed leads to

$$\begin{aligned} \Delta G^\ddagger_{\text{bnd}} &= \Delta G^{\ddagger *}_{\text{bnd}} + \Delta G_u \\ \Delta G^\ddagger_{\text{act}} &= \Delta G^{\ddagger *}_{\text{act}}, \\ \Delta G^\ddagger_{\text{rel}} &= \Delta G^{\ddagger *}_{\text{rel}} - \Delta G_u, \end{aligned} \tag{17}$$

i.e., a reduction of the binding barrier $\Delta G^\ddagger_{\text{bnd}}$ at the expense of an equal increase of the release barrier $\Delta G^\ddagger_{\text{rel}}$. This is advantageous when $\Delta G^\ddagger_{\text{bnd}}$ is limiting. Since $\Delta G^\ddagger_{\text{bnd}}$ is all the larger than the substrate concentration $[S]$ is lower, this scenario depends critically on the substrate concentration and applies when this concentration is sufficiently low, namely when $\Delta G^{\ddagger *}_{\text{bnd}} > \Delta G^{\ddagger *}_{\text{rel}}$ (Fig. 2 and SI 4). The optimal value of ΔG_u is reached when $\Delta G^\ddagger_{\text{bnd}} = \Delta G^\ddagger_{\text{rel}}$. Albery and Knowles argued that this effect explains most of the improvement of triosephosphate isomerase provides over a non-enzymatic catalyst [24].

B. Single-state differential binding

A less stringent constraint than uniform binding is differential binding which accounts for an empirical observation known in chemistry as the Bell-Evans-Polanyi principle [47, 48]. This principle generally relates the difference of activation energies of two related reactions, $\Delta\Delta G^\ddagger_{\text{uncat}}$, to the difference of their reaction energies, $\Delta\Delta G^{\text{o}}_{\text{reac}}$, by a linear relationship $\Delta\Delta G^\ddagger_{\text{uncat}} = \lambda \Delta\Delta G^{\text{o}}_{\text{reac}}$ with $0 \leq \lambda \leq 1$. In our model where we are comparing reactions in the context of different catalysts, this amounts to assuming that $\Delta G_{S^\ddagger}$ is constrained to lie between ΔG_S and ΔG_P, which can also be expressed by a linear relationship,

$$\Delta G_{S^\ddagger} = (1-\lambda)\Delta G_S + \lambda \Delta G_P. \tag{18}$$

This constraint formalizes the notion that the transition state $S^\ddagger$ has chemical properties that are intermediate between those of the substrate S and the product P. In this view, λ reports the degree to which the transition state $S^\ddagger$ is more similar to the product P than to the substrate S. Two independent intrinsic parameters are left, ΔG_S and ΔG_P.

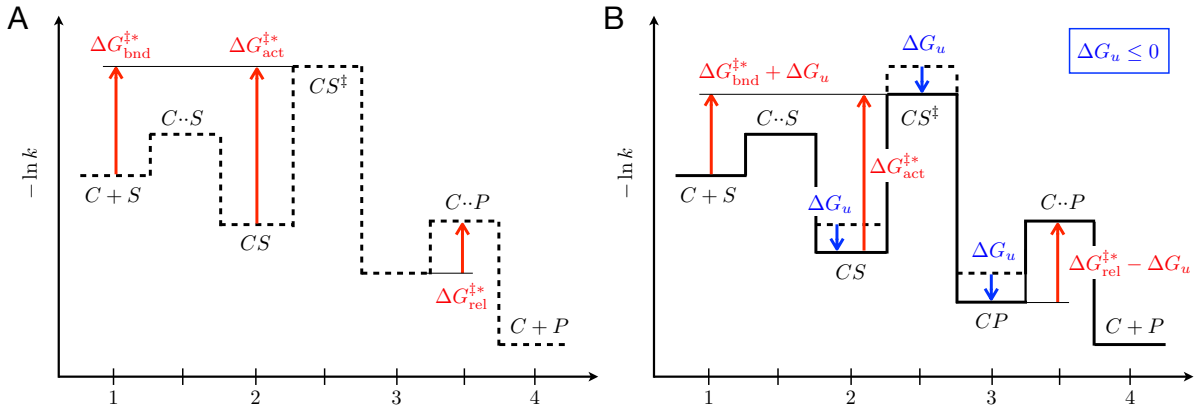

FIG. 2: Single-state uniform binding. **A.** A pre-existing catalytic mechanism is assumed where $\Delta G^{\ddagger *}_{\rm bnd} > \Delta G^{\ddagger *}_{\rm rel}$. **B.** Adding uniform binding to this pre-existing mechanism lowers $\Delta G^{\ddagger}_{\rm bnd}$ at the expense of a larger $\Delta G^{\ddagger}_{\rm rel}$. Given $\Delta G^{\ddagger *}_{\rm bnd} > \Delta G^{\ddagger *}_{\rm rel}$, the value of $\Delta G_u < 0$ that minimizes the maximum of these two barriers is such that $\Delta G^{\ddagger}_{\rm bnd} = \Delta G^{\ddagger}_{\rm rel}$. This leads to a shorter cycling time, but $\Delta G^{\ddagger}_{\rm act}$ is unchanged, and, as in the case represented here, may remain the limiting barrier.

In contrast to uniform binding, differential binding can confer catalysis on its own, but, as we now show, only to a limited extent. To derive this limitation, we express the two kinetic barriers that control $k_{\rm cat}$ as a function of the two degrees of freedom ΔG_S and ΔG_P,

$$\begin{aligned} \Delta G^{\ddagger}_{\rm act} &= \Delta G^{\ddagger}_{\rm uncat} + \lambda(\Delta G_P - \Delta G_S), \\ \Delta G^{\ddagger}_{\rm rel} &= -\Delta G_P. \end{aligned} \tag{19}$$

This makes apparent a trade-off between activation and release, which depend with opposite signs on ΔG_P. Increasing $|\Delta G_P|$ decreases $\Delta G^{\ddagger}_{\rm act}$ but increases $\Delta G^{\ddagger}_{\rm rel}$ (since $\Delta G_P \leq 0$). This trade-off reflects a well-known principle in heterogeneous catalysis, Sabatier principle, which states that an optimal catalyst must strike a balance between sufficient strong interaction to activate the reactant and sufficient low interaction to facilitate product release [49, 50].

If $|\Delta G_P|$ is low, the barrier limiting $k_{\rm cat}$ is $\Delta G^{\ddagger}_{\rm act}$ while if it is large it is $\Delta G^{\ddagger}_{\rm rel}$. The maximal value of $k_{\rm cat}$ is obtained when the two barriers $\Delta G^{\ddagger}_{\rm act}$ and $\Delta G^{\ddagger}_{\rm rel}$ are equivalent, which corresponds to

$$\Delta \hat{G}_P = -\frac{\Delta G^{\ddagger}_{\rm uncat} - \lambda \Delta G_S}{1+\lambda}. \tag{20}$$

Given $\Delta G_S \leq 0$, this implies an upper bound on $k_{\rm cat}$,

$$k_{\rm cat} \leq e^{-\Delta G^{\ddagger}_{\rm uncat}/(1+\lambda)}. \tag{21}$$

Under constraints of differential binding, catalysis can thus reduce the activation barrier $\Delta G^{\ddagger}_{\rm uncat}$ by a factor $(1+\lambda) \leq 2$ at most, which excludes in particular perfect catalysis. This conclusion is verified numerically by sampling the space of possible parameters (Fig. S3A).

C. Single-state discriminative binding

Here we introduce another form of constraint between ΔG_S, $\Delta G_{S^{\ddagger}}$ and ΔG_P, which we propose to better capture an essential trade-off to which enzymes are subject. Perhaps the simplest mechanism by which binding can contribute to enzymatic catalysis is indeed a precise and rigid positioning of the

reactant, in a configuration that defines an optimal chemical environment for the reaction. However, such precise positioning typically necessitates tight binding of the substrate (high $|\Delta G_S|$), which cannot be achieved through interactions limited to the small reactive part of the substrate. Instead, it must involve other, non-reactive parts of the substrate that are also present in the product, implying that $|\Delta G_P|$ is also high. This type of mechanism therefore involves a trade-off between the specificity $\Delta G_{S^\ddagger} - \Delta G_S$ and the affinities ΔG_S and ΔG_P. A similar trade-off is expected if considering catalysis through a strain mechanism, where again high strain is typically coupled to tight binding, irrespectively of the reactant state. To formalize in simple terms this trade-off we propose to consider that ΔG_S, $\Delta G_{S^\ddagger}$ and ΔG_P are dependent on a single degree of freedom $\Delta G_u \leq 0$ with

$$\begin{aligned} \Delta G_S &= \Delta G_P = \Delta G_u \\ \Delta G_{S^\ddagger} &= (1+\alpha)\Delta G_u \end{aligned} \tag{22}$$

where $\alpha \leq 0$ is a fixed parameter that quantifies the potential for transition-state specificity, with uniform binding (no specificity) corresponding to the limit $\alpha \to 0$. Here, ΔG_u represents uniform binding to the substrate and product, but not to the transition state for which the additional contribution $\alpha \Delta G_u$ is present. We previously studied a simple physics model which displays exactly this type of constraints with $\alpha = 1$ [37]. More generally, we could assume $\Delta G_{S^\ddagger} = \Delta G_u + f(\Delta G_u)$ where $f(\Delta G_u) \leq 0$ is an increasing function of ΔG_u that can take arbitrary low values. However, as in the case of differential binding where we limited the analysis to a linear relationship, the phenomenology is already captured by the linear function $f(\Delta G_u) = \alpha \Delta G_u$.

Under the constraints of Eq. (22), which we call discriminative binding, the two barriers controlling k_{cat} are

$$\begin{aligned} \Delta G^\ddagger_{\text{act}} &= \Delta G^\ddagger_{\text{uncat}} + \alpha \Delta G_u \\ \Delta G^\ddagger_{\text{rel}} &= -\Delta G_u. \end{aligned} \tag{23}$$

A trade-off consistent with Sabatier principle is again obtained, where a decrease of the activation barrier is coupled to an increase of the release barrier. As previously, the minimum of $\max(\Delta G^\ddagger_{\text{act}}, \Delta G^\ddagger_{\text{rel}})$ is obtained when $\Delta G^\ddagger_{\text{act}} = \Delta G^\ddagger_{\text{rel}}$ which corresponds to $\Delta \hat{G}_u = \Delta G^\ddagger_{\text{uncat}}/(1+\alpha)$. This implies an upper bound on k_{cat}, namely $k_{\text{cat}} \leq e^{-\Delta G^\ddagger_{\text{uncat}}/(1+\alpha)}$, and therefore a lower bound on the cycling time, as can also be verified numerically (Fig. S3C). In particular, perfect catalysis is again excluded under this scenario.

IV. CONSTRAINTS AND LIMITATIONS ON TWO-STATE CATALYSIS

Enzymes can adopt different conformations with different binding free energies for a same ligand, a property that is key to allostery [36]. Here, we analyze how the presence of two such conformations can contribute to overcome the limitations of catalysts with a single conformation. We take the two states of the catalyst, denoted C_0 and C_1, to be associated with different sets of binding free energies, respectively ΔG^0_S, $\Delta G^0_{S^\ddagger}$, ΔG^0_P and ΔG^1_S, $\Delta G^1_{S^\ddagger}$, ΔG^1_P, and we assume that constraints due to chemical similarity between reaction states apply independently in each state of the catalyst. C_0 is taken to represent the state of lowest free energy and we describe the transition between the two catalytic states similarly to the spontaneous reaction as

$$C_0 \underset{k_{-c}}{\overset{k_c}{\rightleftharpoons}} C_1. \tag{24}$$

Again, we parametrize the rates with a free energy difference $\Delta G_C \geq 0$ and an internal barrier $\Delta G^\ddagger_C \geq 0$, such that (Fig. 3A)

$$k_c = e^{-(\Delta G_C + \Delta G^\ddagger_C)}, \qquad k_{-c} = e^{-\Delta G^\ddagger_C}. \tag{25}$$

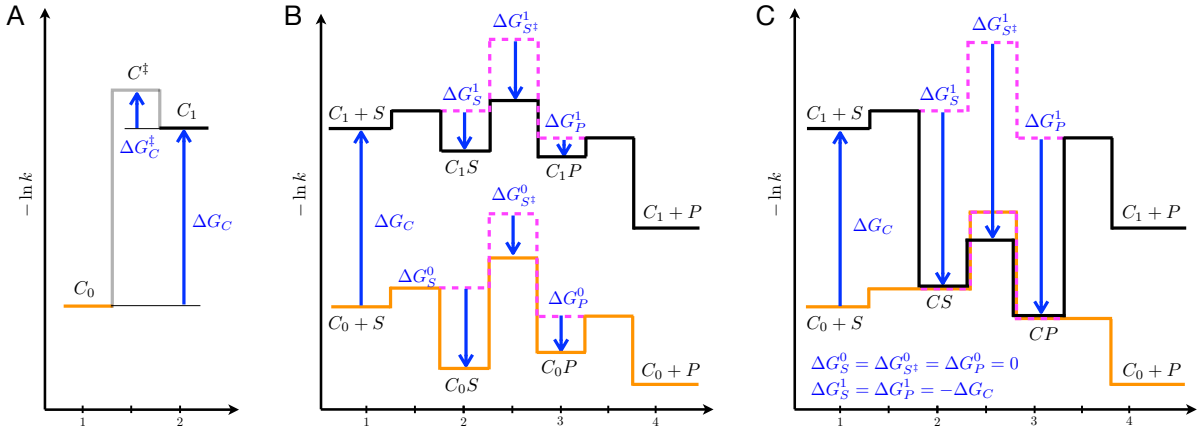

FIG. 3: Two-state catalysis. **A.** A catalyst can be in two states, a low-free-energy conformation C_0 and a high-free-energy conformation C_1. The transitions between these states are parametrized by the free energy differences $\Delta G_C \geq 0$ and $\Delta G_C^\ddagger \geq 0$. **B.** Kinetic barrier diagram representing the transitions within each state of a two-state catalyst. The transitions between the two conformations – corresponding to the horizontal transitions of the two-dimensional network of Eq. (26) – are not represented, which would require introducing a third dimension. As in Fig. 1, the intrinsic parameters are represented by blue arrows and the energy levels for a non-interacting catalyst subject to the same extrinsic conditions are represented by pink dotted lines. **C.** Particular case where C_0 is inactive ($\Delta G_S^0 = \Delta G_{S^\ddagger}^0 = \Delta G_P^0 = 0$) and where binding in C_1 compensates for the cost of the conformational change ($\Delta G_S^1 = \Delta G_P^1 = -\Delta G_C$), so that C_0S and C_1S have same free energy, and so do C_0P and C_1P. Assuming further that $\Delta G_C^\ddagger = 0$, each of these pairs of states can be treated as a single state, here denoted CS and CP.

Generalizing Eq. (4), a catalyst in presence of substrates can be in eight possible states that are interconnected in a two-dimensional network of transitions of the form

$$\begin{array}{ccccccc} C_1+S & \longleftrightarrow & C_1S & \longleftrightarrow & C_1P & \longleftrightarrow & C_1+P \\ \updownarrow & & \updownarrow & & \updownarrow & & \updownarrow \\ C_0+S & \longleftrightarrow & C_0S & \longleftrightarrow & C_0P & \longleftrightarrow & C_0+P. \end{array} \tag{26}$$

The number of intrinsic parameters, which was 3 for single-state catalysts, is 8 for two-state catalysts, namely ΔG_C, $\Delta G_C^\ddagger$ and ΔG_X^σ for $X = S, S^\ddagger, P$ and $\sigma = 0, 1$ (blue arrows in Fig. 3A-B).

The network of Eq. (26) contains many paths from $C_0 + S$ to $C_0 + P$ but one typically drives most of the flux, which makes possible an approximation of the dynamics by a one-dimensional succession of transitions. This is the case in the limit in which we focus here, where ΔG_C is sufficiently large for the states $C_1 + S$ and $C_1 + P$ to have negligible probabilities compared to $C_0 + S$ and $C_0 + P$, and where $\Delta G_S^0 - \Delta G_{S^\ddagger}^0 \ll \Delta G_{\text{uncat}}^\ddagger$ so that C_0 is catalytically inactive and the transition $C_0S \to C_0P$ therefore negligible. In this limit, the dominant path in Eq. (26) is

$$C_0 + S \underset{k_{-1}}{\overset{k_1}{\rightleftharpoons}} C_0S \underset{k_{-2}}{\overset{k_2}{\rightleftharpoons}} C_1S \underset{k_{-3}}{\overset{k_3}{\rightleftharpoons}} C_1P \underset{k_{-4}}{\overset{k_4}{\rightleftharpoons}} C_0P \underset{k_{-5}}{\overset{k_{+5}}{\rightleftharpoons}} C_0 + P, \tag{27}$$

and the cycling time can be computed using Eq. (9) with $N = 4$ intermediate states.

With further assumptions, however, the dynamics can be described by an even simpler model with just $N = 2$ intermediate states. For $C_0 + S \to C_1 + S$ to be negligible but not $C_0S \to C_1S$, the "cost" ΔG_C of the conformational change must indeed be offset by a nearly equivalent gain in binding free energy, with $\Delta G_C + \Delta G_S^1 \simeq \Delta G_S^0$. When this compensation takes place and when $\Delta G_C^\ddagger$ is negligible, the interconversion $C_0S \rightleftharpoons C_1S$ occurs on a fast time scale, and the two states C_0S and C_1S can be treated

as a single state CS. If, further, $\Delta G_P^0 \simeq \Delta G_S^0$ and $\Delta G_P^1 \simeq \Delta G_S^1$, as it is necessarily the case when considering either uniform or discriminative binding, the same argument applies to the interconversion $C_0P \rightleftharpoons C_1P$, and the number of intermediate states is reduced to $N = 2$. Under these different assumptions that may be summarized by

$$\Delta G_C^\ddagger = 0 \qquad (C_1 \to C_0 \text{ occurs instantaneously}) \tag{28}$$

$$\Delta G_S^0 = \Delta G_{S^\ddagger}^0 = \Delta G_P^0 = 0 \qquad (\text{state } C_0 \text{ is inactive}) \tag{29}$$

$$\Delta G_S^1 = \Delta G_P^1 = -\Delta G_C \qquad (\text{binding in } C_1 \text{ compensates for the conformational change}) \tag{30}$$

where equalities can be relaxed to differences of order RT, the dynamics is effectively described by

$$C_0 + S \underset{k_{-1}}{\overset{k_1}{\rightleftharpoons}} \Big[C_0S \rightleftharpoons C_1S\Big] \underset{k_{-2}}{\overset{k_2}{\rightleftharpoons}} \Big[C_1P \rightleftharpoons C_0P\Big] \underset{k_{-3}}{\overset{k_3}{\rightleftharpoons}} C_0 + P, \tag{31}$$

where the states within brackets are not distinguished, and define two effective states CS and CP (Fig. 3C). Formally, the kinetics is then equivalent to that describing single-state catalysis in Eq. (4).

In enzymes, the compensation between ΔG_C and $\Delta G_S^1 = \Delta G_P^1$ required for Eq. (30) to hold can for instance take the form of an enthalpy-entropy compensation [51] between a high-entropy "open" state C_0S where S is loosely bound to a flexible conformation C_0 of the catalyst, and a high-enthalpy "closed" state where S is tightly bound to a rigid conformation C_1 of the catalyst, in which case ΔG_C represents an entropic cost. Alternatively, or additionally, ΔG_C can represent a desolvation free energy from a solvated conformation C_0 to a desolvated conformation C_1 [52].

As we now show, it is precisely in the conditions described by Eqs (28)-(29)-(30) where the kinetics of two-state catalysis is formally equivalent to that of single-state catalysis that the presence of two underlying states makes an essential difference. While Eq. (4) applies in both cases, the way in which the kinetic rates depend on intrinsic parameters are not the same, and the trade-offs at play are radically different.

A. Two-state uniform binding

With single-state catalysts, we saw that uniform binding cannot confer catalysis by itself but can improve on a pre-existing catalytic mechanism by decreasing $\Delta G_{\text{bnd}}^\ddagger$ at the expense of $\Delta G_{\text{rel}}^\ddagger$, which is valuable when the substrate concentration is low (Fig. 2). With two-state catalysts, uniform binding within each state cannot confer catalysis either, but, as we now show, it can improve on a pre-existing catalytic mechanism in the opposite case where release is limiting, by decreasing $\Delta G_{\text{rel}}^\ddagger$ at the expense of $\Delta G_{\text{bnd}}^\ddagger$, which is valuable when the substrate concentration is high.

This is achieved under the assumptions of Eqs. (28)-(29)-(30) that lead to an effectively unidimensional catalytic process with $N = 2$ states described by Eq. (31) and Fig. 3C. Under these assumptions the only free intrinsic parameter is $\Delta G_C \geq 0$. This parameter modifies the intrinsic barriers $\Delta G_{\text{bnd}}^{\ddagger *}$, $\Delta G_{\text{act}}^{\ddagger *}$ and $\Delta G_{\text{rel}}^{\ddagger *}$ of a pre-existing catalytic mechanism into (Fig. 4).

$$\Delta G_{\text{bnd}}^\ddagger = \Delta G_{\text{bnd}}^{\ddagger *} + \Delta G_C \tag{32}$$

$$\Delta G_{\text{act}}^\ddagger = \Delta G_{\text{act}}^{\ddagger *}, \tag{33}$$

$$\Delta G_{\text{rel}}^\ddagger = \Delta G_{\text{rel}}^{\ddagger *} - \Delta G_C. \tag{34}$$

We thus obtain that $\Delta G_C \geq 0$ plays exactly the same role as the uniform binding energy $\Delta G_u \leq 0$ for a one-state non-allosteric catalyst (Eq. (17) and Fig. 2), except that it has opposite sign and therefore opposite effects (Fig. 4): it lowers the release barrier at the expense of the binding barrier. Provided $\Delta G_{\text{rel}}^{\ddagger *} > \Delta G_{\text{bnd}}^{\ddagger *}$, which occurs for sufficiently high substrate concentrations, a two-state mechanism is

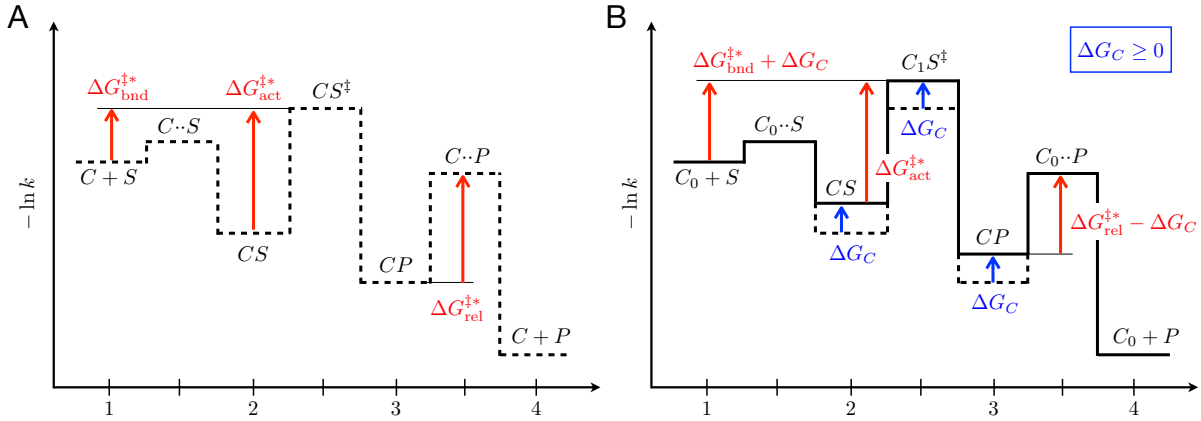

FIG. 4: Two-state uniform binding. **A.** A pre-existing catalytic mechanism is assumed where $\Delta G^{\ddagger *}_{\text{rel}} > \Delta G^{\ddagger *}_{\text{bnd}}$, a situation opposite to Fig. 2A. **B.** Under the conditions of Fig. 3C with the further assumption that C_1 binds uniformly to all reaction states, i.e., $\Delta G^1_S = \Delta G^1_{S^\ddagger} = \Delta G^1_P = -\Delta G_C$, the only designable parameter is $\Delta G_C > 0$, which can be chosen to have $\Delta G^{\ddagger}_{\text{bnd}} = \Delta G^{\ddagger}_{\text{rel}} < \Delta G^{\ddagger *}_{\text{rel}}$, thus effectively reducing the cycling time T_c. It does not affect, however, $\Delta G^{\ddagger *}_{\text{act}}$ which, as in the case represented here, may remain the limiting barrier.

therefore advantageous, with an optimal value of ΔG_C given by $\Delta \hat{G}_C = (\Delta G^{\ddagger *}_{\text{rel}} - \Delta G^{\ddagger *}_{\text{bnd}})/2$. Furthermore, while uniform binding can only lower k_{cat} in the context of a single-state catalyst, it can increase it in the context of a two-state catalyst, since k_{cat} depends on $\Delta G^{\ddagger}_{\text{rel}}$ but not on $\Delta G^{\ddagger}_{\text{bnd}}$. This is an example of a possibility that allostery offers beyond what rigid catalysts can possibly achieve. However, in this scenario as in Albery and Knowles' original scenario [24], $\Delta G^{\ddagger}_{\text{cat}}$ remains unchanged, and a pre-existing catalytic mechanism must be assumed for any catalysis to take place.

B. Two-state differential binding

For a single-state catalyst, we saw that the constraint of differential binding sets a lower bound on the cycling time of the form $T_c \geq e^{\Delta G^{\ddagger}_{\text{uncat}}/(1+\lambda)}$, which excludes, in particular, perfect catalysis. As can be shown analytically and numerically (SI 5 and Fig. S3D), the same bound applies to a two-state catalyst when each of its states is subject to the same constraint of differential binding, i.e., $\Delta G^0_{S^\ddagger} = (1-\lambda)\Delta G^0_S + \lambda \Delta G^0_P$ and $\Delta G^1_{S^\ddagger} = (1-\lambda)\Delta G^1_S + \lambda \Delta G^1_P$. Under such constraints, the presence of two states cannot alleviate the fundamental limitations of single-state catalysts.

C. Two-state discriminative binding

In contrast, under constraints of discriminative binding where, in each state of the catalyst, arbitrary specificity to the transition state can be achieved at the expense of tight binding to the substrate and product, a two-state catalyst can overcome the limitations of single-state catalysis. Formally, the constraints of Eq. (22) are extended to two-state catalysts by imposing $\Delta G^0_{S^\ddagger} = \alpha \Delta G^0_S = \alpha \Delta G^0_P$ and $\Delta G^1_{S^\ddagger} = \alpha \Delta G^1_S = \alpha \Delta G^1_P$. Catalytic "perfection" can even been reached (Fig. S3E). This is again achieved under the assumptions of Eqs. (28)-(29)-(30) that lead to an effectively unidimensional catalytic process with $N = 2$ states described by Eq. (31) and Fig. 3C. These assumptions leave only one designable parameter, namely $\Delta G_C \geq 0$. As illustrated in Fig. 5 for the case $\Delta G^{\text{o}}_{\text{reac}} \leq 0$, choosing this parameter to satisfy $\Delta G^{\ddagger}_{\text{uncat}} \leq \alpha \Delta G_C \leq \Delta G^{\ddagger}_{\text{uncat}} - \Delta G^{\text{o}}_{\text{reac}}$, i.e., if the reaction is irreversible ($\Delta G^{\text{o}}_{\text{reac}} = -\infty$),

$$\Delta G_C \geq \Delta G^{\ddagger}_{\text{uncat}}/\alpha \tag{35}$$

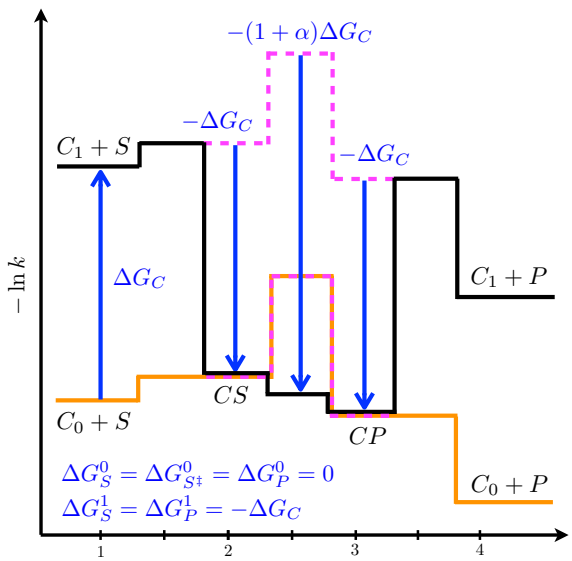

FIG. 5: Perfect catalysis with two-state discriminative binding. We consider as in Fig. 3C a design verifying the conditions of Eqs. (28)-(29)-(30) so that the interconversions $C_0S \rightleftharpoons C_1S$ and $C_0P \rightleftharpoons C_1P$ are instantaneous and define two effective states CS and CP. Under constraints of discriminative binding, the difference $\Delta G^1_{S^\ddagger} - \Delta G^1_S = -\alpha\Delta G_C$ can take arbitrary low values provided ΔG_C is large enough. A value of ΔG_C can thus be chosen so that $C_1S \to C_1P$ is barrier-less. In cases where $\Delta G^{\mathrm{o}}_{\mathrm{reac}} < 0$, as illustrated here, this leaves as only kinetic barrier the barrier associated with the diffusion of the substrate towards the catalyst, $C_0 + S \to C_0S$. Perfect catalysis is then achieved that is only diffusion-limited.

makes negative all barriers along the path $C_0 + S \to C_0S \to C_1S \to C_1P \to C_0P \to C_0 + P$, except for the inevitable extrinsic barrier associated with diffusion at the first step $C_0 + S \to C_0S$. Further, no state outside of this path is a kinetic trap: $C_1 + S$ relaxes to $C_0 + S$ without kinetic barrier and similarly for $C_0S^\ddagger$ to $C_1S^\ddagger$ and $C_1 + P$ to $C_0 + P$.

This design can be understood as decoupling the activation and release steps, which are in trade-off in the other scenarios: activation is made to occur in one state of the catalyst – the active state C_1 with a large binding free energy $\Delta G^1_{S^\ddagger}$ – while product release is made to occur in a different state – the inactive state C_0 with negligible binding free energy ΔG^0_P. The switch between the two states is itself made barrier-less by introducing a large energy difference ΔG_C between C_0 and C_1 that compensates for ΔG^1_S and ΔG^1_P, thus making the transitions $C_0S \to C_1S$ and $C_1P \to C_0P$ barrier-less. By this mechanism, Sabatier principle is abolished and perfect catalysis reached despite constraints of discriminative binding within each state of the catalyst. We previously illustrated this principle in a simple physics model [37] where we assumed $\Delta G^{\mathrm{o}}_{\mathrm{reac}} < 0$, but it applies more generally to spontaneous reactions with arbitrary values of $\Delta G^{\mathrm{o}}_{\mathrm{reac}} < \Delta G^{\ddagger}_{\mathrm{uncat}}$, including cases where $\Delta G^{\mathrm{o}}_{\mathrm{reac}} > 0$, in which case Eq. (35) must be replaced by $\Delta G^{\ddagger}_{\mathrm{uncat}} - \Delta G^{\mathrm{o}}_{\mathrm{reac}} \leq \alpha\Delta G_C \leq \Delta G^{\ddagger}_{\mathrm{uncat}}$, and perfect catalysis can be limited by the thermodynamical barrier $\Delta G^{\mathrm{o}}_{\mathrm{reac}}$ when this barrier exceeds the diffusion barrier $-\ln(k_d[S])$ (SI 3).

V. DISCUSSION

Following and extending previous works by Albery and Knowles [24, 29], we analyzed the principles underlying enzymatic activities by treating catalysis as a modulation of kinetic barriers under constraints on the capacity to discriminate transition states from substrates and products. In absence of such discrimination, unimolecular reactions cannot be catalyzed [14], but Albery and Knowles proposed that

adding a non-discriminative interaction to a pre-existing catalytic mechanism was the predominant mechanism by which enzymes surpass small molecules [24, 29]. They further noted that such "uniform binding" was readily evolutionarily accessible through interactions with non-reactive "handles" that are part of many biological reactants. They contrasted this form of uniform binding with "differential binding", where the affinity to the transition state is constrained to be intermediate between the affinities to the substrate and to the product, as commonly observed in chemistry [47, 48]. Here, we revisited this constraint of differential binding to demonstrate that it sets an upper bound on catalytic efficiency which excludes "perfect" catalysis, where rate acceleration is only limited by thermodynamics and diffusion. This limitation stems from the same trade-off between activation and release that is widely observed in heterogeneous catalysis where it underscores Sabatier principle of optimal catalysis [53].

To explain how enzymes can escape this trade-off and possibly reach perfection, we extended the model in two ways. First, we proposed that enzymes are better understood as subject to another form of constraints, which we called discriminative binding, where arbitrary specificity to the transition state is achievable but at the expense of increasingly large affinities to the substrate and product. This constraint formalizes the notion that high specificity to the transition state requires precise and rigid positioning of the substrate, which is possible only through strong interactions with non-reactive parts of the reactant that are common to the substrate and product. Second, we extended the analysis to catalysts that can be in several states, with different affinities to reactants in their different conformational states. This formalizes the observation that many enzymes undergo conformational changes and have catalytic activities that depend on their conformation, a property associated with allostery [21]. Our main conclusion is that allosteric catalysts can overcome the limitations of non-allosteric catalysts when subject to constraints of discriminative binding, but we also showed that allosteric catalysts can exploit uniform binding to achieve the opposite effect of non-allosteric catalysts, namely facilitating product release at the expense of a weaker enzyme-substrate association.

Our results demonstrate how conformational changes and allostery can play an essential role in catalysis, given constraints from chemical similarity between reaction states alone. This is to be contrasted with explanations for conformational changes in enzymes that refer to other types of constraints, e.g., constraints from substrate specificity, as in Koshland's induced fit model [19, 20], constraints from geometry, as in models where a conformational change allows the enzyme to enclose a substrate without compromising its binding and release [15, 54], or constraints from regulation, as in many justifications of allostery [21]. This is also to be contrasted with proposals where conformational changes accelerate the chemical step through rate-promoting vibrarions [55]. In our model, conformational changes only make the optimization of the chemical step $CS \to CP$ compatible with the optimization of the other steps of the catalytic cycle, in particular product release $CP \to C + P$. Our model is therefore consistent with rigid active sites being optimal for the chemical step [7, 8].

The allosteric architecture that we find conducive to perfect catalysis is peculiar, with a weakly interacting state coexisting with a strongly interacting state of higher free energy. This architecture echoes the description of many enzymes as switching between an entropy rich inactive state and a rigid active state [56], a feature that has directly been observed in single molecule experiments [57]. The model also sets constraints on the free energy cost of the conformational change, which must be commensurate with the activation energy of the spontaneous reaction. To be precise, conformational changes are not strictly necessary to achieve the effects that our model describes: what matters is primarily a free energy difference between two states of the substrate-enzyme complex, which, for instance, may also be achieved through a distortion of the substrate. In any case, our model indicates that the role played by allostery is difficult to discern when considering only the (effective) kinetics of the catalytic cycle, since this kinetics can be formally equivalent to the Michaelis-Menten kinetics of non-allosteric catalysts. This may explain why the contribution of allostery to enzymatic catalysis is often overlooked.

What we called allostery is the presence of two states with different affinities for a same ligand [36]. More commonly, allostery is associated with indirect interactions between distinct binding sites [21]. Our model is conform to this definition when viewing the substrate as made of two pieces, a reactive

part and a non-reactive part, which bind to distinct sites of the catalyst, a binding site and an active site. In this "split-site" model [32], the non-reactive part acts as an allosteric effector "communicating" with the reactive part. In this view, non-reactive substrate handles have a very different role than in Albery and Knowles' mechanism of uniform binding: they act as allosteric activators rather than entropic traps. Notably, for triosephosphate isomerase, the enzyme on which Albery and Knowles built their analysis, but also for several other enzymes, Richard and collaborators have performed experiments where the substrate is cut in two pieces, with results showing that the dissociated non-reactive handle allosterically controls the catalysis of the isolated reactive part [10, 58]. These experiments provide direct evidence that substrate handles can act as allosteric activators.

This view of substrate handles as enabling allosteric catalysis is closely related to Jencks's proposal that these handles enable the expression in the transition state of an "intrinsic binding energy" which is only partially realized in the substrate-catalyst complex [9]. Our model may in fact be seen as a formalization of this proposal. This formalization provides at least three clarifications. Firstly, our model identifies the constraints under which this mechanism is necessary, namely constraints of discriminative binding ultimately originating from the chemical similarity between reaction states. Secondly, our model links this mechanism to conformational changes and allostery, and thus provides a rationale for the prevalence of these features in enzymes. As noted previously, other mechanisms can possibly achieve the same effects. Jencks, in fact, downplayed the contribution of conformational changes [59], but recent experimental results clearly indicate that enzymes combine stiffness and flexibility [27]. Our model also suggests that an optimal conformational change lies on the frontier between a two-state switch and an induced-fit mechanism, with an inactive state that is only marginally stable in the absence of the substrate. Lastly, Jencks emphasized the role of substrate destabilization [25], which corresponds in our model to the transition of the catalyst to an unstable state C_1 upon binding to S, but our model adds that a comparable destabilization of the product is necessary. According to our model, not all the forms of destabilization envisioned by Jencks are therefore as conducive to catalysis. In particular, a destabilization stemming from a physical distortion of the bound substrate that is released in the transition state as well as in the product state, which may be considered the "most obvious mechanism of substrate destabilization" [25], cannot achieve perfect catalysis unless another mechanism is present that destabilizes the bound product (SI 6). This is illustrated in simple physics models [37, 60] for the catalysis of bond cleavage where the strain mechanism originally envisioned by Haldane [61] is found to be fundamentally limited in absence of flexibility of the catalyst [66].

As noted, optimal allosteric catalysis can be kinetically indistinguishable from non-allosteric catalysis. In particular, it may be described by the same Michaelis-Menten kinetics. Different scenarios make, however, different predictions on the impact of mutations that reduce binding affinity to substrate handles. Uniform binding predicts that decreasing this affinity increases k_{cat} (or, if the activation barrier $\Delta G^{\ddagger}_{\text{act}}$ dominates, that it leaves it nearly unchanged). Allosteric catalysis under constraints of discriminative binding predicts, on the other hand, that k_{cat} decreases when the activation barrier dominates. This latter scenario is in agreement with many observations [9, 12]. Uniform and allosteric binding are, however, non exclusive, and can even be complementary: uniform binding in the inactive state of an allosteric enzyme can indeed provide the same benefits as uniform binding in a non-allosteric enzyme under conditions of low substrate concentrations, by trading a slower release for a more efficient substrate capture. A role for conformational changes in allosteric catalysis is also not excluding other roles concomitantly played by the same conformational change, e.g., a role in enclosing the substrate and/or enabling regulation of the enzyme activity. Different scenarios have, however, important differences from an evolutionary perspective. Optimal uniform binding requires a fine-tuned affinity to the handle that depends on substrate concentration, on properties of the spontaneous reaction and on the catalytic mechanism, while optimal allosteric binding requires primarily an affinity that compensates for the cost of the conformational change with a value that is only loosely constrained by the activation free energy of the spontaneous reaction. An allosteric enzyme may therefore adapt to catalyze a new reaction while preserving the same allosteric mechanism if the new and old substrates share the same handle. This

possibility is consistent with the repeated attachment of the same handles to many substrates, e.g., phosphate handles to metabolites [62], as well as with the concomitant reutilization of the same folds, e.g., TIM barrels [63], in enzymes catalyzing different reactions.

The approach that we followed to rationalize enzyme mechanisms focuses on the constraints imposed by chemical similarity between reaction states. The importance of these constraints is well-recognized in heterogeneous catalysis, where they take the form of Sabatier principle [53]. This qualitative principle states that an optimal catalyst must strike a compromise between high affinities that lower the activation energy and low affinities that favor product release. Our analysis recovers this trade-off when the catalyst is non-allosteric, whether the constraints take the form of differential binding or discriminative binding. Chemical constraints have been particularly studied for transition-metal catalysis, where they are found to follow scaling relationships, with a few "descriptors" linearly controlling the binding affinity of the catalytic surface to the different reaction states when comparing surfaces made of different metallic elements [45, 46]. In the context of the unimolecular reaction that we studied, this corresponds to the observation that transition-state and product affinities are both linearly related to substrate affinity, i.e., $\Delta G_{S^\ddagger} = a_{S^\ddagger}\Delta G_S$ and $\Delta G_P = a_P \Delta G_S$ with factors $a_{S^\ddagger} \geq 0$ and $a_P \geq 0$ that depend on the geometry of the surface but relate surfaces made of different metals. Formally, such scaling relations encompass uniform binding when $a_{S^\ddagger} = a_P = 1$, pure substrate stabilization when $1 < a_{S^\ddagger} = a_P$ (SI 6), differential binding when $1 < a_{S^\ddagger} < a_P$, and discriminative binding when $1 = a_P < a_{S^\ddagger}$. As we have shown, allostery allows for perfect catalysis in this later case, but also, more generally, whenever $a_P \leq 1 < a_{S^\ddagger}$ (SI 7). In light of our model, implementing allostery could therefore overcome some of the limitations currently encountered in heterogeneous catalysis. This would require, however, departing from solid catalysts that lack suitable flexibility and adding handles to reactants that are often small molecules, although an alternative might be to replace handles by independent activators.

Finally, explaining the peculiarities of enzymes should also help engineering them. Allostery is currently not considered in the design of new enzymes [64], but our model suggests that a truly specific stabilization of transition states may only be achievable in presence of internal degrees of freedom.

Acknowledgments

I thank Yann Sakref for comments, and ANR-21-CE45-0033, ANR-22-CE06-0037 for funding.

---

[1] Hammes, G. G. Multiple conformational changes in enzyme catalysis. *Biochemistry* **41**, 8221–8228 (2002).

[2] Yang, H. *et al.* Protein conformational dynamics probed by single-molecule electron transfer. *Science* **302**, 262–266 (2003).

[3] Eisenmesser, E. Z. *et al.* Intrinsic dynamics of an enzyme underlies catalysis. *Nature* **438**, 117–121 (2005).

[4] Kamerlin, S. C. L. & Warshel, A. At the dawn of the 21st century: Is dynamics the missing link for understanding enzyme catalysis? *Proteins: Structure, Function, and Bioinformatics* **78**, 1339–1375 (2010).

[5] Glowacki, D. R., Harvey, J. N. & Mulholland, A. J. Taking ockham's razor to enzyme dynamics and catalysis. *Nature chemistry* **4**, 169–176 (2012).

[6] Kohen, A. Role of dynamics in enzyme catalysis: substantial versus semantic controversies. *Accounts of chemical research* **48**, 466–473 (2015).

[7] Tunon, I., Laage, D. & Hynes, J. T. Are there dynamical effects in enzyme catalysis? Some thoughts concerning the enzymatic chemical step. *Archives of Biochemistry and Biophysics* **582**, 42–55 (2015).

[8] Warshel, A. & Bora, R. P. Perspective: Defining and quantifying the role of dynamics in enzyme catalysis. *The Journal of Chemical Physics* **144**, 180901 (2016).

[9] Jencks, W. P. Binding energy, specificity, and enzymatic catalysis: the Circe effect. *Advances in Enzymology - and Related Areas of Molecular Biology* **43**, 219–410 (1975).

[10] Fernandez, P. L., Nagorski, R. W., Cristobal, J. R., Amyes, T. L. & Richard, J. P. Phosphodianion Activation of Enzymes for Catalysis of Central Metabolic Reactions. *Journal of the American Chemical Society* **143**, 2694–2698 (2021).

[11] Moore, S. A. & Jencks, W. P. Formation of active site thiol esters of CoA transferase and the dependence of catalysis on specific binding interactions. *Journal of Biological Chemistry* **257**, 10893–10907 (1982).

[12] Hedstrom, L. Serine Protease Mechanism and Specificity. *Chemical Reviews* **102**, 4501 – 4524 (2002).

[13] Pauling, L. Nature of Forces between Large Molecules of Biological Interest. *Nature* **161**, 707–709 (1948).

[14] Noor, E. *et al.* Uniform binding and negative catalysis at the origin of enzymes. *Protein Science* **31**, e4381 (2022).

[15] Wolfenden, R. Enzyme catalysis: conflicting requirements of substrate access and transition state affinity. *Molecular and cellular biochemistry* **3**, 207–211 (1974).

[16] Fersht, A. *Structure and mechanism in protein science: a guide to enzyme catalysis and protein folding* (Macmillan, 1999).

[17] Smith, A. J. T. *et al.* Structural reorganization and preorganization in enzyme active sites: comparisons of experimental and theoretically ideal active site geometries in the multistep serine esterase reaction cycle. *Journal of the American Chemical Society* **130**, 15361 – 15373 (2008).

[18] Boehr, D. D., McElheny, D., Dyson, H. J. & Wright, P. E. The Dynamic Energy Landscape of Dihydrofolate Reductase Catalysis. *Science* **313**, 1638–1642 (2006).

[19] Koshland, D. E. Application of a Theory of Enzyme Specificity to Protein Synthesis. *Proceedings of the National Academy of Sciences* **44**, 98 – 104 (1958).

[20] Herschlag, D. The role of induced fit and conformational changes of enzymes in specificity and catalysis. *Bioorganic Chemistry* **16**, 62–96 (1988).

[21] Monod, J., Changeux, J.-P. & Jacob, F. Allosteric proteins and cellular control systems. *Journal of Molecular Biology* **6**, 306 – 329 (1963).

[22] Westheimer, F. H. Why Nature Chose Phosphates. *Science* **235**, 1173–1178 (1987).

[23] Gerlt, J. A. Evolution of Enzyme Function and the Development of Catalytic Efficiency: Triosephosphate Isomerase, Jeremy R. Knowles, and W. John Albery. *Biochemistry* **60**, 3529–3538 (2021).

[24] Albery, W. J. & Knowles, J. R. Evolution of enzyme function and the development of catalytic efficiency. *Biochemistry* **15**, 5631–5640 (1976).

[25] Jencks, W. P. Destabilization is as important as binding. *Philosophical Transactions of the Royal Society of London. Series A: Physical and Engineering Sciences* **345**, 3–10 (1993).

[26] Hertel, K. J., Peracchi, A., Uhlenbeck, O. C. & Herschlag, D. Use of intrinsic binding energy for catalysis by an RNA enzyme. *Proceedings of the National Academy of Sciences* **94**, 8497–8502 (1997).

[27] Richard, J. P. Protein Flexibility and Stiffness Enable Efficient Enzymatic Catalysis. *Journal of the American Chemical Society* **141**, 3320–3331 (2019).

[28] Amyes, T. L., Malabanan, M. M., Zhai, X., Reyes, A. C. & Richard, J. P. Enzyme activation through the utilization of intrinsic dianion binding energy. *Protein Engineering, Design and Selection* **30**, 159–168 (2016).

[29] Burbaum, J. J., Raines, R. T., Albery, W. J. & Knowles, J. R. Evolutionary optimization of the catalytic effectiveness of an enzyme. *Biochemistry* **28**, 9293–9305 (1989).

[30] Fersht, A. R. Catalysis, binding and enzyme-substrate complementarity. *Proceedings of the Royal Society of London. Series B. Biological Sciences* **187**, 397–407 (1974).

[31] Ellington, A. D. & Benner, S. A. Free energy differences between enzyme bound states. *Journal of Theoretical Biology* **127**, 491–506 (1987).

[32] Menger, F. M. Analysis of ground-state and transition-state effects in enzyme catalysis. *Biochemistry* **31**, 5368–5373 (1992).

[33] Cleland, W. & Northrop, D. B. Energetics of substrate binding, catalysis, and product release. *Methods in Enzymology* **308**, 3–27 (1999).

[34] Kozuch, S. & Shaik, S. How to Conceptualize Catalytic Cycles? The Energetic Span Model. *Accounts of Chemical Research* **44**, 101–110 (2011).

[35] Bearne, S. L. Illustrating Enzyme Inhibition Using Gibbs Energy Profiles. *Journal of Chemical Education* **89**, 732–737 (2012).

[36] Monod, J., Wyman, J. & Changeux, J. P. On the nature of allosteric transitions: a plausible model. *Journal of Molecular Biology* **12**, 88 – 118 (1965).

[37] Rivoire, O. How flexibility can enhance catalysis. *Physical Review Letters* **131**, 088401 (2023).

[38] Vojvodic, A. & Nrskov, J. K. New design paradigm for heterogeneous catalysts. *National Science Review* **2**, 140–149 (2015).

[39] Perez-Ramerez, J. & Lopez, N. Strategies to break linear scaling relationships. *Nature Catalysis* **2**, 971–976 (2019).

[40] Knowles, J. R. & Albery, W. J. Perfection in enzyme catalysis: the energetics of triosephosphate isomerase. *Accounts of Chemical Research* **10**, 105–111 (1977).

[41] Ninio, J. Alternative to the steady-state method: derivation of reaction rates from first-passage times and pathway probabilities. *Proceedings of the National Academy of Sciences* **84**, 663–667 (1987).

[42] Sakref, Y., Munoz-Basagoiti, M., Zeravcic, Z. & Rivoire, O. On kinetic constraints that catalysis imposes on elementary processes. *preprint* (2023).

[43] Cornish-Bowden, A. *Fundamentals of enzyme kinetics* (John Wiley & Sons, 2013).

[44] Pauling, L. Molecular architecture and biological reactions. *Chemical and engineering news* (1946).

[45] Fernandez, E. M. *et al.* Scaling Relationships for Adsorption Energies on Transition Metal Oxide, Sulfide, and Nitride Surfaces. *Angewandte Chemie International Edition* **47**, 4683–4686 (2008).

[46] Greeley, J. Theoretical Heterogeneous Catalysis: Scaling Relationships and Computational Catalyst Design. *Annual review of chemical and biomolecular engineering* **7**, 605 – 635 (2016).

[47] Jencks, W. P. A primer for the Bema Hapothle. An empirical approach to the characterization of changing transition-state structures. *Chemical Reviews* **85**, 511–527 (1985).

[48] Jensen, F. *Introduction to computational chemistry* (John Wiley & sons, 2017).

[49] Sabatier, P. *La catalyse en chimie organique* (Libraire Polytechnique, 1913).

[50] Medford, A. J. *et al.* From the sabatier principle to a predictive theory of transition-metal heterogeneous catalysis. *Journal of Catalysis* **328**, 36–42 (2015).

[51] Chodera, J. D. & Mobley, D. L. Entropy-Enthalpy Compensation: Role and Ramifications in Biomolecular Ligand Recognition and Design. *Annual Review of Biophysics* **42**, 121–142 (2013).

[52] Dragan, A. I., Read, C. M. & Crane-Robinson, C. Enthalpyentropy compensation: the role of solvation. *European Biophysics Journal* **46**, 301–308 (2017).

[53] Medford, A. J., Vojvodic, A. & Hummelshj, J. S. From the Sabatier principle to a predictive theory of transition-metal heterogeneous catalysis. *Journal of Catalysis* **328**, 36 – 42 (2015).

[54] Malabanan, M. M., Amyes, T. L. & Richard, J. P. A role for flexible loops in enzyme catalysis. *Current Opinion in Structural Biology* **20**, 702–710 (2010).

[55] Nashine, V. C., Hammes-Schiffer, S. & Benkovic, S. J. Coupled motions in enzyme catalysis. *Current opinion in chemical biology* **14**, 644–651 (2010).

[56] Riziotis, I. G., Ribeiro, A. J., Borkakoti, N. & Thornton, J. M. Conformational Variation in Enzyme Catalysis: A Structural Study on Catalytic Residues. *Journal of Molecular Biology* **434**, 167517 (2022).

[57] Lu, H. P., Xun, L. & Xie, X. S. Single-Molecule Enzymatic Dynamics. *Science* **282**, 1877–1882 (1998).

[58] Cristobal, J. R. & Richard, J. P. Kinetics and mechanism for enzyme-catalyzed reactions of substrate pieces. *Methods in Enzymology* **685**, 95–126 (2023).

[59] Jencks, W. P. Economics of Enzyme Catalysis. *Cold Spring Harbor Symposia on Quantitative Biology* **52**, 65–73 (1987).

[60] Muñoz-Basagoiti, M., Rivoire, O. & Zeravcic, Z. Computational design of a minimal catalyst using colloidal particles with programmable interactions. *Soft Matter* **19**, 3933–3939 (2023).

[61] Haldane, J. B. *Enzymes* (Green and Co, UK, 1930).

[62] Nobeli, I., Ponstingl, H., Krissinel, E. B. & Thornton, J. M. A structure-based anatomy of the E. coli metabolome. *Journal of molecular biology* **334**, 697–719 (2003).

[63] Wierenga, R. The TIM-barrel fold: a versatile framework for efficient enzymes. *FEBS letters* **492**, 193–198 (2001).

[64] Lovelock, S. L. *et al.* The road to fully programmable protein catalysis. *Nature* **606**, 49–58 (2022).

[65] Cao, J. Michaelis-Menten Equation and Detailed Balance in Enzymatic Networks. *The Journal of Physical Chemistry B* **115**, 5493–5498 (2011).

[66] But Jencks also noted that "there are only a few enzymes for which there is evidence for catalysis by strain, distortion, or compression" [59].