A role for conformational changes in enzyme catalysis

Olivier Rivoire

Gulliver, CNRS, ESPCI, Université PSL, Paris, France.

The role played by conformational changes in enzyme catalysis is controversial. In addition to examining specific enzymes, studying formal models can help identify the conditions under which conformational changes promote catalysis. Here, we present a model demonstrating how conformational changes can break a generic trade-off due to the conflicting requirements of successive steps in catalytic cycles, namely high specificity for the transition state to accelerate the chemical transformation and low affinity for the products to favor their release. The mechanism by which the trade-off is broken is a transition between conformations with different affinities for the substrate. The role of the effector that induces the transition is played by a substrate "handle", a part of the substrate that is not chemically transformed but whose interaction with the enzyme is nevertheless essential to rapidly complete the catalytic cycle. A key element of the model is the formalization of the constraints causing the trade-off that the presence of multiple states breaks, which we attribute to the strong chemical similarity between successive reaction states – substrates, transition states and products. For the sake of clarity, we present our model for irreversible one-step unimolecular reactions. In this context, we demonstrate how the different forms that chemical similarities between reaction states can take impose limits on the overall catalytic turnover. We first analyze catalysts without internal degrees of freedom, and then show how two-state catalysts can overcome their limitations. Our results recapitulate previous proposals concerning the role of conformational changes and substrate handles in a formalism that makes explicit the constraints that elicit these features. In addition, our approach establishes links with studies in the field of heterogeneous catalysis, where the same trade-offs are observed and where overcoming them is a well-recognized challenge.

INTRODUCTION

Two widespread but puzzling features distinguish enzymes from chemical catalysts such as small molecules or large solid surfaces. First, many enzymes undergo conformational changes on the same timescale as their catalytic cycle [1–3], but the role of these conformational changes in catalysis is debated [4–6], notably because our mechanistic understanding of chemical processes suggest that rigid active sites provide optimal environments for chemical transformations [7, 8]. Second, many enzymes catalyze reactions in which the reactant comprises a "handle", i.e., a non-reactive part that is not transformed chemically but whose interaction with the enzyme is critical to efficient catalytic turnover [9]. Examples include phosphate groups in glycolysis [10], coenzyme A in fatty acid metabolism [11], and amino acid chains extending the cleaved peptide bond in proteolysis [12]. The contribution of these handles is not obvious given Pauling principle [13] that explains catalysis by a specific stabilization of transition states. Since these handles are unchanged, they indeed bind uniformly to substrates and transition states. For multi-molecular reactions, they can accelerate the chemical transformation by bringing and keeping together multiple substrates,

but substrate handles are as common in the enzymatic catalysis of unimolecular reactions where this mechanism of catalysis by proximity cannot be invoked [14].

Several unrelated explanations have been proposed to explain conformational changes and substrate handles in enzymatic catalysis. One class of explanations view conformational changes as a means to achieve conflicting geometrical requirements. For instance, a catalytic transformation may be optimized by totally surrounding the reactant with the enzyme, which is incompatible with binding and release [15, 16]. Or, multiple transitions states may be present along the chemical transformation, each requiring a different geometry [17, 18]. Other types of constraints have also been invoked, including demands for substrate specificity, as in the induced-fit model [19, 20], or for regulation, as in many models of allostery [21]. Similarly, several explanations have been proposed for the role of substrate handles. For instance, phosphate groups on many metabolites are justified by the negative charge that they confer, which prevents metabolites to which they are attached from diffusing outside cells [22]. More generally, however, two proposals were made in the 1970s that directly link substrate handles to catalytic efficiency, understood as the rapid completion of a catalytic cycle.

One proposal due to Albery and Knowles arises from their extensive study of triosephosphate isomerase [23], a very efficient enzyme that catalyzes an essential unimolecular reaction in glycolysis, the conversion between two triosephospate isomers that harbor the same phosphate handle. Their explanation invokes chemical and evolutionary constraints and relies on a classification of binding mechanisms contributing to catalysis by the degree of discrimination that they can achieve, with the idea that less discriminative mechanisms are evolutionarily more accessible [24]. From this point of view, the easiest mechanism to evolve is uniform binding to a substrate handle, the term "uniform" referring to the absence of discrimination between the substrate, the transition state and the product. Next, Albery and Knowles considered the possibility of further improvement through "differential binding" where the binding affinity to a transition state is constrained to be intermediate between the binding affinities of the two states preceding and following it. This constraint is motivated by the widespread observation of linear relationships between the affinities to substrates, transition states and products [25]. Finally, they considered improvements through the most general possibility of arbitrary binding to each state, which they called "catalysis of elementary steps". For triosephosphate isomerase, they argued that uniform binding through the phosphate handle is responsible for most of the improvement over catalysis by a simpler carboxylate base, with differential binding and catalysis of elementary steps making only smaller additional contributions [24]. In their model, a key assumption is that catalysis is present without the handle, and a key variable is the ambient substrate concentration. The increased binding affinity provided by the handle indeed acts to retain the substrate close to the active site until it is chemically transformed, but does not change the activation barrier for the chemical transformation itself. Only for sufficiently low substrate concentrations, when substrate unbinding is limiting, is their model therefore relevant.

In terms of Michaelis-Menten kinetics, uniform binding to the substrate handle increases catalytic efficiency in this first scenario by reducing the Michaelis constant K_M without affecting the catalytic constant k_{cat}. In many cases, however, altering the interaction of the enzyme with the handle has the very opposite effect: K_M is unchanged but k_{cat} is reduced [9]. This puzzling observation motivated Jencks to elaborate a different explanation for the ubiquity of substrate handles. Most relevant to unimolecular reactions is his proposal that the discrimination between a substrate and the transition state can be mainly achieved by

destabilizing the substrate rather than by stabilizing the transition state [9, 26]. In this view, the role of the handle is to provide sufficient negative interaction free energy to compensate for the positive free energy involved in substrate destabilization. In Jencks' words, substrate handles provide a large "intrinsic binding energy" which is not apparent in measured binding energies but is "used as the currency to pay for substrate destabilization" [9].

In contrast to Albery and Knowles' proposal, Jencks' proposal is independent of the substrate concentration and involves a lowering of the activation barrier for the chemical transformation. The role of an intrinsic binding energy has been demonstrated in several instances, including triosephosphate isomerase [27, 28]. In particular, Richard and collaborators have shown how the intrinsic energy provided by the interaction with the substrate handle is used to drive many enzymes from a flexible inactive state into a stiff active state through a transition that parallels allosteric transitions: when the substrate in cut in two pieces, the dissociated handle acts as an allosteric effector for the catalysis of the remaining reactive part [29]. In these works, two explanations are given for this mechanism. The first, already mentioned above, is the need to accommodate an open form where the active site is accessible to the substrate, with a closed form where the enzyme optimally encloses it [15, 16]. The second explanation, aligned with the model that we present below, is the need to avoid too tight an association with the substrate [29].

Albery and Knowles' proposal rests on the quantitative analysis of a model that makes explicit an optimality criterion and the constraints under consideration. In contrast, the conditions under which substrate destabilization is preferable over transition-state stabilization, and the conditions under which an transition between an active and inactive forms are beneficial, have not been formally established. Here, we show how the formalism introduced by Albery and Knowles, known as kinetic barrier diagrams [30], can be extended to account for these mechanisms. Focusing on unimolecular reactions for clarity and because they pose the most significant challenges to explain substrate handles [14], we first derive limits on the cycling time of catalysts that exist only in one conformation. We then show that the capacity of a catalyst to have different affinities for the same ligand when occupying different conformational states, which is one of the hallmarks of allostery [38], can lift some of these limitations. This provides a general formulation of a principle that we previously illustrated with a minimal physics model [39].

Formulating our model with kinetic barrier diagrams has several advantages. Firstly, it offers a rigorous framework that is free from the limitations and inconsistencies of alternative representations based on energy or free energy landscapes [30]. Secondly, it allows us to integrate the explanations of Jencks with those of Albery and Knowles and thus to clarify how they differ but are not exclusive. Finally, kinetic barrier diagrams are not only widely used in studies of enzymes [32–34, 37], but also in studies of non-enzymatic catalysts [35] and in more general studies of non-equilibrium biophysical problems [36]. They therefore provide a common language for biochemists, chemists and biophycists to discuss how enzymes differ from chemical catalysts. In particular, we point out that similar constraints limit the efficiency of single-state catalysts in our model and that of catalytic surfaces in the field of heterogeneous catalysis, where these constraints imply a well-known trade-off known as Sabatier principle [40]. Breaking this trade-off is a well-recognized challenge in this context [41]. Formally demonstrating a mechanism by which this can be achieved is therefore of potential interest beyond the study of enzymes.

METHODS

Outline

We first present an informal overview of our results without reference to kinetic barrier diagrams before introducing this framework to provide a more precise presentation.

The main thrust of the model is to expose and analyze the trade-offs that arise between the different steps of a catalytic cycle as a result of the chemical similarity between the reaction states. In the simple context of unimolecular reactions on which we focus, our model distinguishes three reaction states: the substrate S, the product P and the transition state $S^\ddagger$. Accelerating the chemical transformation requires a catalyst to selectively stabilize the transition state (Pauling principle). In the model, this translates into the requirement that the quantity $\Delta G_{S^\ddagger} < 0$ representing the stabilization of the transition state by the catalyst is more negative than the quantity $\Delta G_S < 0$ representing the stabilization of the substrate, i.e. $\Delta G_{S^\ddagger} < \Delta G_S$. This condition is necessary, but not sufficient, for a catalytic cycle to be completed faster than a spontaneous reaction. Another important prerequisite is that the product is released sufficiently rapidly. This requires low product stabilization, represented by a sufficiently high value of the quantity $\Delta G_P < 0$, representing the stabilization of the product (see Eq. (15)).

The difficulty lies in the fact that the three parameters ΔG_S, $\Delta G_{S^\ddagger}$ and ΔG_P that define a catalyst in our model cannot generally be modified independently due to the chemical similarity between the three reaction states S, $S^\ddagger$ and P: the stabilization of $S^\ddagger$, which is necessary for catalysis, generally implies, at least partly, the stabilization of S and P, which can be detrimental to the completion of the catalytic cycle. The proposal is that conformational changes provide a means of escaping the trade-offs implied by these constraints.

The model analyzes the consequences of the different forms that these chemical constraints can take, formalized by different types of correlation between the values of the three parameters ΔG_S, $\Delta G_{S^\ddagger}$ and ΔG_P. The simplest case assumes that these three parameters are constrained to have the same value, $\Delta G_S = \Delta G_{S^\ddagger} = \Delta G_P$. Such a uniform binding cannot ensure catalysis per se, since the transition state is not stabilized with respect to the substrate. Albery and Knowles noted, however, that the addition of uniform binding to a pre-existing catalytic mechanism can be beneficial [24]. Formally, this amounts to assuming a pre-existing catalytic mechanism defined by certain ΔG^*_S, $\Delta G^*_{S^\ddagger}$ and ΔG^*_P values, and then examining how adding a common $\Delta G_u < 0$ value to these three parameters can contribute to faster completion of a catalytic cycle. This is shown to be the case if the substrate concentration is sufficiently low. The addition of this uniform binding energy ΔG_u is the justification for substrate handles proposed by Albery and Knowles.

Another form of chemical constraint is to assume that $\Delta G_{S^\ddagger}$ is constrained to be intermediate between ΔG_S and ΔG_P. This form of differential binding reflects the widespread observation of linear free-energy relationships in chemistry [25]. It is formalized by taking ΔG_S and ΔG_P as independent parameters and assuming that $\Delta G_{S^\ddagger}$ takes an intermediate value between the two: $\Delta G_{S^\ddagger} = (1-\lambda)\Delta G_S + \lambda \Delta G_P$ where $0 < \lambda < 1$ represents the degree of similarity of the transition state to the product. We show that in this case ΔG_S and ΔG_P can be chosen to achieve catalysis, but that the activation barrier cannot be reduced by a factor greater than two – or more precisely, by a factor greater than $1+\lambda$ (see Eq. (21)). This excludes, in particular, diffusion-limited catalysis where activation barriers are completely annihilated.

To overcome this limitation, it is necessary to decouple the two catalytic steps in trade-off, namely the chemical transformation $CS \to CP$ and the release of the product $CP \to C + P$. One mechanism for achieving this is to have the catalyst adopt two different states with different binding properties during the catalytic cycle, a state C_1 for the chemical transformation $C_1S \to C_1P$ and a state C_0 for the release of the product $C_0P \to C_0 + P$. Such a two-state catalyst is described in our model by 7 parameters: the stabilization of the reaction states in each state of the catalyst, ΔG^0_S, $\Delta G^0_{S^\ddagger}$, ΔG^0_P, and ΔG^1_S, $\Delta G^1_{S^\ddagger}$, ΔG^1_P, and the difference of free energy between the two states of the catalyst in the absence of any reactant, ΔG_C. Although these 7 parameters expand the range of possible catalysts, we show that when each catalyst state is subject to differential binding constraints, catalysis is still limited to lowering the activation barriers by a factor of at most two.

We propose, however, that another type of correlation between the stabilization of reaction states better reflects the constraints to which enzymes are subjected. The idea is that the transition state can be stabilized more strongly than the substrate and product, but only at the expense of a greater stabilization of these two states. This describes, for example, a situation where effective stabilization of the transition state requires precise, fixed positioning of the substrate, which can also only be achieved by strong binding of both the substrate and the product. Or a situation of strain catalysis where high strain is only possible at the cost of a tight binding of both the substrate and the product. We formalize this type of constraint, which we call discriminative binding, by assuming that in any given catalyst state, ΔG_S, $\Delta G_{S^\ddagger}$ and ΔG_P are constrained to satisfy $\Delta G_S = \Delta G_P = \Delta G_u$ and $\Delta G_{S^\ddagger} = (1 + \alpha)\Delta G_S$ where α controls the increment in the stabilization of the transition state achieved by stabilizing the substrate and product. For example, we previously presented a simple model of strain catalysis where $\alpha = 1$ [39].

Under this form of chemical constraint, which we call discriminative binding, we show that a single-state catalyst can at most lower the activation energy by a factor of $1 + \alpha$ (see Eq. (24)). However, a two-state catalyst can overcome this limitation and eventually reduce the activation barrier altogether. This is achieved through a particular design in which one state is inactive with $\Delta G^0_S = \Delta G^0_{S^\ddagger} = \Delta G^0_P = 0$ while the other strongly binds the transition state. The two remaining parameters ΔG^1_S and ΔG_C must be well chosen for this mechanism to be effective: we must have $\Delta G^1_S = -\Delta G_C$ so that the energy cost of the conformational change is offset by the substrate's affinity for the catalytically active state, and ΔG_C must exceed the activation energy to abolish it (see Eq. (36)).

In this model, ΔG^1_S therefore plays the role of the intrinsic binding energy of Jenck's proposal. It is not directly observed as binding free energy, as it is compensated for by ΔG_C, but is essential for stabilizing the transition state. Our model, however, differs from a mechanism of pure substrate destabilization, which we find to have limited catalytic efficiency (Supplementary Material (SM) Sec. 6). Our model, on the other hand, is analogous to an allosteric mechanism where a substrate handle provides the intrinsic binding energy ΔG^1_S to activate the enzyme through a transition to a different conformation of higher free energy ΔG_C.

One of the merits of our model is to establish a direct link with observations in heterogeneous catalysis involving solid (single-state) surfaces. The trade-off between chemical transformation and product release is well known in this context to be a central limitation to the efficient completion of catalytic cycles. It is usually represented by Volcano diagrams showing that catalytic efficiency exhibits a non-trivial optimum as a function of the catalyst's affinity for the substrate [40]. This optimum follows Sabatier principle: the catalyst must

bind sufficiently strongly to the transition state, but not too strongly. Our model recapitulates these observations when considering a single catalyst subjected to either differential or discriminative binding constraints. Studies on heterogeneous catalysts have in fact gone further in characterizing the nature of the chemical constraints at play, by showing scaling relationships [42], which can take exactly the form of the discriminative binding constraints that we propose (see SM Sec 7).

Model

Spontaneous reaction

We consider for simplicity a unimolecular reaction described by a single-step mechanism,

$$S \underset{k_{-0}}{\overset{k_0}{\rightleftharpoons}} P \tag{1}$$

where S represents the substrate, P the product, k_0 the first-order rate constant for the forward reaction and k_{-0} the first-order rate constant for the reverse reaction. The rate of product formation is then $v_0 = \partial[P]/\partial t = -\partial[S]/\partial t = k_0[S] - k_{-0}[P]$ where $[S]$ and $[P]$ are, respectively, the concentrations of substrate S and product P. To model a cellular context, we study this reaction in a non-equilibrium steady state where these concentrations are maintained at fixed values.

To reason about catalysis, it is convenient to consider (free) energies rather than rates [35]. We therefore introduce a parametrization of the two rates $k_{\pm 0}$ by two free energies, an activation free energy $\Delta G^{\ddagger}_{\text{uncat}} \geq 0$ and a free energy of formation of one molecule $\Delta G^{\text{o}}_{\text{reac}}$ such that

$$k_0 = Ae^{-\Delta G^{\ddagger}_{\text{uncat}}/RT}, \qquad k_{-0} = Ae^{-(\Delta G^{\ddagger}_{\text{uncat}} - \Delta G^{\text{o}}_{\text{reac}})/RT}, \tag{2}$$

where R is the universal gas constant, T the temperature, and A a frequency factor ($A = k_B T/h$ in transition state theory, k_B being Boltzmann constant and h Planck constant). To simplify the formulas, we set the unit of energy to have $RT = 1$ and the unit of time to have $A = 1$. The two quantities $\Delta G^{\ddagger}_{\text{uncat}}$ and $\Delta G^{\text{o}}_{\text{reac}}$ are, by definition, independent of the concentrations of S and P. $\Delta G^{\ddagger}_{\text{uncat}} \geq 0$ represents a positive activation energy for the forward reaction $S \to P$ while $\Delta G^{\text{o}}_{\text{reac}}$ is a free energy of formation related to the equilibrium constant $K_{\text{eq}} = k_0/k_{-0}$ by $K_{\text{eq}} = e^{-\Delta G^{\text{o}}_{\text{reac}}}$ (note that we define $\Delta G^{\text{o}}_{\text{reac}}$ *per molecule* rather than *per mole* as more common in chemistry). It is also convenient to introduce the free energy of reaction ΔG_{reac} when the substrate and product concentrations are fixed to the arbitrary values $[S]$ and $[P]$,

$$\Delta G_{\text{reac}} = \Delta G^{\text{o}}_{\text{reac}} + \ln \frac{[P]}{[S]}. \tag{3}$$

$\Delta G^{\text{o}}_{\text{reac}}$ can be of any sign, and we only need to impose $\Delta G^{\text{o}}_{\text{reac}} < \Delta G^{\ddagger}_{\text{uncat}}$ for the reverse reaction $P \to S$ to have a positive activation energy, and therefore for the two states S and P to be well defined. These parameters for the spontaneous reaction are represented in a kinetic barrier diagram [30, 34] with three states, the two stable states S and P, whose levels differ by $\Delta G^{\text{o}}_{\text{reac}}$, and a transition state $S^{\ddagger}$ whose level differs from that of S by $\Delta G^{\ddagger}_{\text{uncat}}$ (Fig. 1A).

For clarity, we make two further simplifying assumptions: no product is present, $[P] = 0$, and the reaction is irreversible, $k_{-0} = 0$ or, equivalently, $\Delta G^{\mathrm{o}}_{\mathrm{reac}} = -\infty$ [a generalization to arbitrary $\Delta G^{\mathrm{o}}_{\mathrm{reac}}$ is presented in the Supplementary Material (SM)]. These assumptions imply that the rate of product formation due to the spontaneous reaction is simply $v_0 = k_0[S]$.

Catalysis

Catalysis occurs if a substrate is converted more quickly in the presence than in the absence of a substance – the catalyst – which is left unchanged in the process. We first consider a catalyst C with no internal degree of freedom that follows a catalytic cycle with two intermediate states, described by a Markov chain of the form

$$C + S \underset{k_{-1}}{\overset{k_1}{\rightleftharpoons}} CS \underset{k_{-2}}{\overset{k_2}{\rightleftharpoons}} CP \underset{k_{-3}}{\overset{k_3}{\rightleftharpoons}} C + P \tag{4}$$

where $k_1 = k_D[S]$ and $k_{-3} = k_D[P]$ are pseudo-first-order rate constants that depend on the ambient concentrations of substrate and product and on a diffusion rate constant k_D, while the other rates $k_{\pm i}$ are first-order rate constants that depend on properties of the catalyst.

Part of the confusion surrounding the role of conformational changes in catalysis stems from the different definitions of catalysis [6]. This definition is sometimes limited to the chemical transformation from CS to CP. As the selective pressures exerted on enzymes act on the entire catalytic cycle, we consider here a measure of catalytic efficiency that takes into account each step of the Eq. (4). To do this, we quantify catalytic efficiency by the average time T_c to complete a full catalytic cycle, i.e. to reach $C + P$ from $C + S$ in Eq. (4). The smaller the cycling time T_c, the more efficient catalysis. In conditions where $[P] = 0$, this cycling time is equivalent to the catalytic efficiency y introduced by Albery and Knowles [43]. If, furthermore, the contribution of the spontaneous reaction to the rate of product formation, $v = \partial[P]/\partial t$, is negligible, T_c is equivalent to $[C]/v$, where $[C]$ is the total concentration of free and bound catalysts [44, 45]. For the catalytic cycle described by Eq. (4), the rate of product formation follows the Michaelis-Menten equation, $v = k_{\mathrm{cat}}[S][C]/(K_M + [S])$ [46], and we can therefore express the dependence of T_c on the substrate concentration $[S]$ in terms of a catalytic constant k_{cat} and a Michaelis constant K_M, as

$$T_c = \frac{1}{k_{\mathrm{cat}}}\left(1 + \frac{K_M}{[S]}\right) \tag{5}$$

where, for the catalytic cycle described by Eq. (4) (see SM Sec. 1 or [24]),

$$\frac{1}{k_{\mathrm{cat}}} = \frac{1}{k_2} + \frac{1}{k_3} + \frac{k_{-2}}{k_2 k_3} \tag{6}$$

and

$$\frac{K_M}{k_{\mathrm{cat}}} = \frac{1}{k_D}\left(1 + \frac{k_{-1}}{k_2} + \frac{k_{-1}k_{-2}}{k_2 k_3}\right). \tag{7}$$

We assumed here $N = 2$ intermediate states, CS and CP, but Eq. (5) extends to unidimensional chains of transitions with an arbitrary number N of intermediate states, with appropriate redefinitions of k_{cat} and K_M (see SM Sec. 1).

Since T_c quantifies the time to complete a catalytic cycle with no reference to the spontaneous reaction, its value does not reveal if catalysis is taking place, i.e., if the reaction

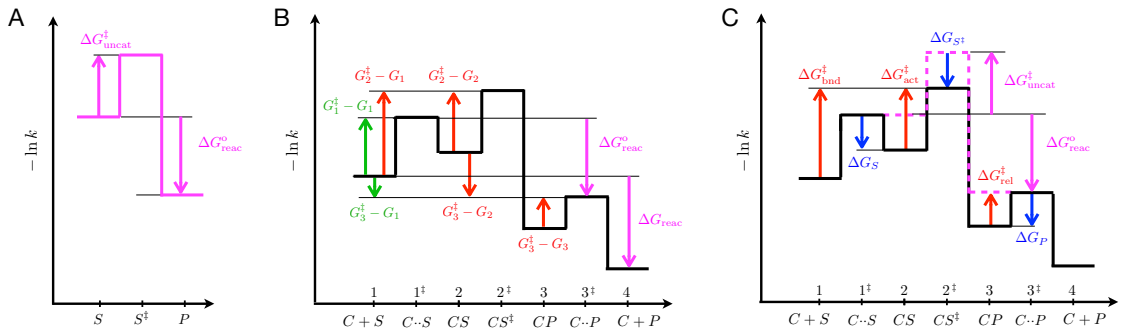

FIG. 1: Kinetic barrier diagrams. **A.** Diagram for the spontaneous reaction $S \rightleftharpoons P$, described by two stable states, S and P, a transition state, $S^{\ddagger}$, and two parameters, an activation barrier $\Delta G^{\ddagger}_{\rm uncat}$ and a reaction barrier $\Delta G^{\rm o}_{\rm reac}$. Here $\Delta G^{\rm o}_{\rm reac} < 0$ but $\Delta G^{\rm o}_{\rm reac} = -\infty$ if considering an irreversible reaction (more generally, $\Delta G^{\rm o}_{\rm reac}$ can be of any sign as long as $\Delta G^{\ddagger}_{\rm uncat} + \Delta G^{\rm o}_{\rm reac} < 0$). **B.** Diagram for the catalytic process described by Eq. (4). The stable states, $C+S$, CS, CP and $C+P$ are represented as local minima with energies G_i $(i = 1, 2, 3, 4)$, separated by transition states $C{\cdot\cdot}S$, $CS^{\ddagger}$ and $C{\cdot\cdot}P$, with energies $G^{\ddagger}_i$ $(i = 1, 2, 3)$. The heights of the barriers represent the transition rates. For instance, the rate from CS to CP is $k_2 = e^{G^{\ddagger}_2 - G_2}$ while the reverse rate from CP to CS is $k_{-2} = e^{G^{\ddagger}_2 - G_3}$. The cycling time T_c expressed in Eq. (9) depends on the forward barriers between successive states, $G^{\ddagger}_i - G_i$, as well as on the forward barriers between non-successive states $G^{\ddagger}_j - G_i$ with $j > i$. In total, this corresponds to the 6 barriers represented by green or red arrows. Of these 6 barriers, 2 are set by extrinsic parameters independent of the catalyst (in green) and 4 are modulated by parameters intrinsic to the catalyst (in red). Some barriers may have negative values (downward-pointing arrows) and therefore not constitute barriers *stricto sensu*. In particular, $G_3 - G^{\ddagger}_2 \to -\infty$ when the reaction is irreversible. Note also that $G_4 \to -\infty$ when products are maintained at vanishing concentration. **C.** When considering irreversible reactions, only 3 barriers are dependent on properties of the catalyst, $\Delta G^{\ddagger}_{\rm bnd}, \Delta G^{\ddagger}_{\rm act}, \Delta G^{\ddagger}_{\rm rel}$, represented by the 3 red arrows. We describe the properties of the catalyst by three intrinsic parameters, $\Delta G_S, \Delta G_{S^{\ddagger}}, \Delta G_P$, represented by the 3 blue arrows. They are defined by making a comparison with a non-interacting catalyst which differs from an interacting catalyst in the internal section of the diagram, where its profile is that of the spontaneous reaction (pink dotted lines).

in the presence of the catalyst is faster than in its absence. In particular, as T_c represents a turn-over time *per catalyst*, it is *not* comparable to the mean spontaneous reaction time $1/k_0$ *per substrate*. To assess the presence of catalysis, we must either compare the reaction time $1/k_0$ *per substrate* in the absence of catalysts to another reaction time in the presence of catalysts, or compare the cycling time T_c *per catalyst* in the presence of the substrate of interest to a another cycling time where the catalyst is substituted for an inactive substance. The two approaches lead to the same simple criterion valid for any number N of intermediate states: catalysis occurs if and only if $k_0 < k_{\rm cat}$, where $k_{\rm cat}$ is the catalytic constant in Eq. (6). Remarkably, this criterion is independent of K_M, whose value impacts the cycling time T_c but has no bearing on the occurence of catalysis *per se* [45].

As for the spontaneous reaction, we can re-parametrize the elementary rates $k_{\pm i}$ in Eq. (4) with free energies and represent the catalytic process in a kinetic energy diagram. To this

end, each transition is associated with a transition state. The first transition $C+S \underset{k_{-1}}{\overset{k_1}{\rightleftharpoons}} CS$ is associated with a first transition state ($i=1$) denoted $C{\cdot\cdot}S$ to represent a substrate just about to bind to the catalyst. The second transition $CS \underset{k_{-2}}{\overset{k_2}{\rightleftharpoons}} CP$ is associated with a second transition state ($i=2$) denoted $CS^\ddagger$ to represent the transition-state-catalyst complex. The third transition $CP \underset{k_{-3}}{\overset{k_3}{\rightleftharpoons}} C+P$, finally, is associated with a third transition state ($i=3$) denoted $C{\cdot\cdot}P$ to represent a product just about to be released from the catalyst. We define free energies G_i for the stable states ($i=1$ for $C+S$, $i=2$ for CS, $i=3$ for CP and $i=4$ for $C+P$) and $G_i^\ddagger$ for the transition states ($i=1,2,3$), so that

$$k_i = e^{-(G_i^\ddagger - G_i)}, \qquad k_{-i} = e^{-(G_i^\ddagger - G_{i+1})}, \tag{8}$$

which allows the catalytic cycle of Eq. (4) to be represented by a kinetic barrier diagram (Fig. 1B) [30, 34]. In this diagram, the energy difference between the last state $C+P$ and the first state $C+S$ coincides with the free energy change ΔG_{reac} defined in Eq. (3) (due to the assumption that the substrate and the product have same diffusion constant k_D).

In terms of these free energies, the cycling time T_c takes, when assuming $[P]=0$, a simple form (see SM Sec. 1 or [35]),

$$T_c = \sum_{1\le i\le j\le N+1} e^{G_j^\ddagger - G_i}, \tag{9}$$

where the sum is over each pair $i \le j$ of a transition state j following a stable state i. Typically, one term dominates the sum and $T_c \simeq e^{\Delta G_{\text{span}}}$ where $\Delta G_{\text{span}} = \max_{1\le i\le j\le N+1}(G_j^\ddagger - G_i)$ is known as the energetic span [35]. We shall work in this approximation where estimating the cycling time amounts to estimating the limiting barrier $G_j^\ddagger - G_i$ that determines the energetic span ΔG_{span}. Importantly, this limiting barrier is not necessarily associated with a limiting step ($i=j$) but can involve a transition state that does not follow immediately the intermediate state ($i<j$). When $N=2$, $(N+1)(N+2)/2=6$ barriers, represented by the green and red vertical arrows in Fig. 1B, have to be compared to determine which is largest. Some of these barriers, however, may have negative values and be therefore negligible. When considering an irreversible reaction, or more generally when considering as in Fig. 1B a reaction with a large activation barrier for the reverse reaction, this is the case of the two barriers $G_3^\ddagger - G_1$ and $G_3^\ddagger - G_2$, represented in Fig. 1B by downward-pointing arrows.

Similarly to T_c, the catalytic constant k_{cat} that defines whether catalysis is present (if $k_{\text{cat}} > k_0$) is given by

$$\frac{1}{k_{\text{cat}}} = \sum_{2\le i\le j\le N+1} e^{G_j^\ddagger - G_i} \simeq e^{\max_{2\le i\le j\le N+1}(G_j^\ddagger - G_i)}. \tag{10}$$

With $N=2$ intermediate states, k_{cat} is therefore determined by the largest of $N(N+1)/2=3$ barriers.

Intrinsic and extrinsic barriers

When considering constraints on catalytic efficiency, an important distinction is between intrinsic barriers which depend on properties of the catalyst (in red in Fig. 1), and extrinsic

barriers which do not (in green in Fig. 1), and depend instead exclusively on the parameters $\Delta G^{\ddagger}_{\text{uncat}}$ and $\Delta G^{\text{o}}_{\text{reac}}$ of the spontaneous reaction and on the ambient concentrations $[S]$ and $[P]$. In the catalysis of an irreversible reaction with no product and $N = 2$ intermediates, only three barriers are intrinsic and non-negative, represented by the three red upward-pointing arrows in Fig. 1B. Given the essential role of these barriers in what follows, it is convenient to give them short names (Fig. 1C),

$$\begin{aligned} \Delta G^{\ddagger}_{\text{bnd}} &= G^{\ddagger}_2 - G_1, \\ \Delta G^{\ddagger}_{\text{act}} &= G^{\ddagger}_2 - G_2, \\ \Delta G^{\ddagger}_{\text{rel}} &= G^{\ddagger}_3 - G_3. \end{aligned} \tag{11}$$

$\Delta G^{\ddagger}_{\text{bnd}}$ is a barrier involving both binding and activation, associated with the transition $C + S \to CP$, and is all the higher that the substrate concentration is lower (small G_1) and the activation energy is higher (large G_2). ΔG_{act} is an activation barrier for the chemical transformation in presence of the catalyst, controlling the transition $CS \to CP$. $\Delta G^{\ddagger}_{\text{rel}}$, finally, is associated with product release, and controls the transition $CP \to C + P$.

With these notations, Eq. (9) can be rewritten as

$$T_c = T_{\text{ext}} + e^{\Delta G^{\ddagger}_{\text{bnd}}} + e^{\Delta G^{\ddagger}_{\text{act}}} + e^{\Delta G^{\ddagger}_{\text{rel}}} \simeq T_{\text{ext}} + e^{\max(\Delta G^{\ddagger}_{\text{bnd}}, \Delta G^{\ddagger}_{\text{act}}, \Delta G^{\ddagger}_{\text{rel}})} \tag{12}$$

where T_{ext} a lower bound on the cycling time that is set by the extrinsic parameters and is therefore independent of the catalyst itself; for irreversible reactions, T_{ext} is simply the mean time needed for a substrate to diffuse towards a catalyst. Similarly,

$$\frac{1}{k_{\text{cat}}} = e^{\Delta G^{\ddagger}_{\text{act}}} + e^{\Delta G^{\ddagger}_{\text{rel}}} \simeq e^{\max(\Delta G^{\ddagger}_{\text{act}}, \Delta G^{\ddagger}_{\text{rel}})}. \tag{13}$$

Intrinsic parameters

If the three intrinsic barriers $\Delta G^{\ddagger}_{\text{bnd}}$, $\Delta G^{\ddagger}_{\text{act}}$, $\Delta G^{\ddagger}_{\text{rel}}$ can be lowered arbitrarily, perfect catalysis with a minimal cycling time $T_c = T_{\text{ext}}$ is achievable. The difficulties for a catalyst to discriminate between the reaction states S, $S^{\ddagger}$ and P (Fig. 1A) may, however, prevent this optimum to be reached. To analyze the trade-offs at play, we need to relate the three intrinsic barriers $\Delta G^{\ddagger}_{\text{bnd}}$, $\Delta G^{\ddagger}_{\text{act}}$, $\Delta G^{\ddagger}_{\text{rel}}$ to physical parameters reporting the affinity of the catalyst to the three reaction states.

To this end, we take as reference a non-interacting catalyst subject to the same extrinsic conditions. By definition, its kinetic barrier diagram differs only in its internal section, as represented by the pink dotted lines in Fig. 1C: it has an activation barrier identical to that of the spontaneous reaction ($\Delta G^{\ddagger}_{\text{act}} = \Delta G^{\ddagger}_{\text{uncat}}$), no barrier for release ($\Delta G^{\ddagger}_{\text{rel}} = 0$), and the binding/activation barrier is entirely controlled by diffusion ($\Delta G^{\ddagger}_{\text{bnd}} = -\ln(k_D[S])$). An actual catalyst differs from this non-interacting catalyst by the extent to which the free energies of the three states CS, $CS^{\ddagger}$ and CP are lowered, which we quantify with the three intrinsic parameters ΔG_S, $\Delta G_{S^{\ddagger}}$ and ΔG_P represented by blue arrows in Fig. 1C. These three parameters, which can be thought as binding free energies are, by definition, independent of reactant concentrations and have necessarily negative values.

In terms of the three intrinsic parameters ΔG_S, $\Delta G_{S^\ddagger}$, ΔG_P, the three intrinsic barriers controlling T_c are given by

$$\begin{aligned} \Delta G^\ddagger_{\text{bnd}} &= -\ln(k_D[S]) + \Delta G^\ddagger_{\text{uncat}} + \Delta G_{S^\ddagger}, \\ \Delta G^\ddagger_{\text{act}} &= \Delta G^\ddagger_{\text{uncat}} + \Delta G_{S^\ddagger} - \Delta G_S, \\ \Delta G^\ddagger_{\text{rel}} &= -\Delta G_P. \end{aligned} \tag{14}$$

We use below these expressions to study how the limiting barrier $\max(\Delta G^\ddagger_{\text{bnd}}, \Delta G^\ddagger_{\text{act}}, \Delta G^\ddagger_{\text{rel}})$ in Eq. (12) is minimized as ΔG_S, $\Delta G_{S^\ddagger}$ and ΔG_P are varied.

Conditions and fundamental limits to catalysis

From Eqs. (2) and (13), it follows that catalysis ($k_{\text{cat}} > k_0$) requires $\max(\Delta G^\ddagger_{\text{act}}, \Delta G^\ddagger_{\text{rel}}) < \Delta G^\ddagger_{\text{uncat}}$, which, given Eq. (14), corresponds to

$$\begin{aligned} \Delta G_{S^\ddagger} &< \Delta G_S, \\ \Delta G_P &> -\Delta G^\ddagger_{\text{uncat}}. \end{aligned} \tag{15}$$

The first condition embodies Pauling principle [47]: the catalyst must bind more strongly to the transition state than to the substrate to reduce the activation energy. The second condition imposes the product not to bind too strongly, to allow for efficient product release. Neither minimizing each of the three barriers in Eq. (14) nor satisfying Eq. (15) involve any trade-off: minimizing $\Delta G_{S^\ddagger}$ while maximizing ΔG_S and ΔG_P contributes to minimize each barrier in Eq. (14) and permits to satisfy Eq. (15). In this model, the maximal value of k_{cat} ($k_{\text{cat}} = 2$) is for instance achieved with $\Delta G_S = 0$, $\Delta G_{S^\ddagger} = -\Delta G^\ddagger_{\text{uncat}}$, $\Delta G_P = 0$. This limit corresponds to so-called perfect catalysis, where the limiting process is the diffusion of a substrate towards a catalyst [43].

RESULTS

Constraints and limitations on single-state catalysis

We propose to understand general design principles of enzymes as arising from generic but non-thermodynamical constraints to which the parameters ΔG_S, $\Delta G_{S^\ddagger}$ and ΔG_P are subject. We ignore constraints from geometry, specificity or regulation, and focus instead on constraints arising from the chemical similarity of the three reaction states S, $S^\ddagger$ and P. We model these constraints by imposing a positive correlation between ΔG_S, $\Delta G_{S^\ddagger}$ and ΔG_P. First, we follow Albery and Knowles and re-analyze the cases of uniform binding, where the three free energies are imposed to be the same, and of differential binding, where $\Delta G_{S^\ddagger}$ is assumed to lie between ΔG_S and ΔG_P [24]. Next, we introduce and justify a new type of constraint that we call discriminative binding, where the specificity to the transition state $\Delta G_{S^\ddagger} - \Delta G_S$ is positively correlated to the affinities to the substrate and product ΔG_S and ΔG_P. Two other constraints are also analyzed in Supplementary Material, one capturing the notion of substrate destabilization proposed for enzyme catalysis [26] and another capturing the scaling laws observed in heterogeneous catalysis [42, 48]. Throughout this section, we assume single-state catalysts described by Eq. (4) before analyzing in the next section the benefit of catalysts with an internal degree of freedom.

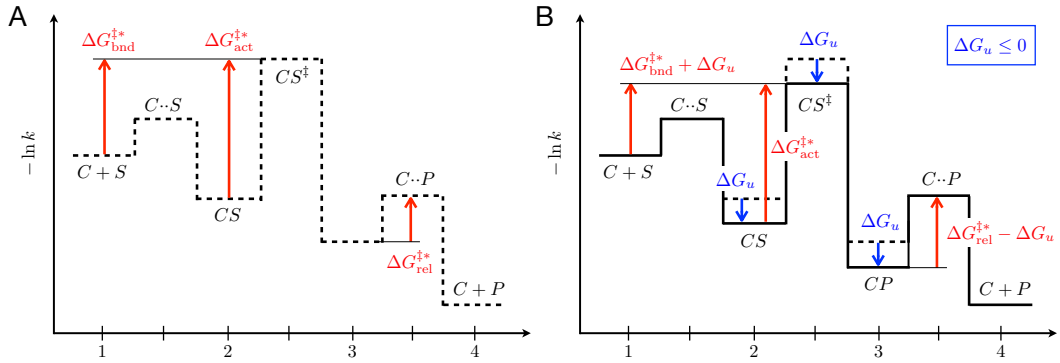

FIG. 2: Single-state uniform binding. **A.** A pre-existing catalytic mechanism is assumed where $\Delta G^{\ddagger *}_{\text{bnd}} > \Delta G^{\ddagger *}_{\text{rel}}$. **B.** Adding uniform binding to this pre-existing mechanism lowers $\Delta G^{\ddagger}_{\text{bnd}}$ at the expense of a larger $\Delta G^{\ddagger}_{\text{rel}}$. Given $\Delta G^{\ddagger *}_{\text{bnd}} > \Delta G^{\ddagger *}_{\text{rel}}$, the value of $\Delta G_u < 0$ that minimizes the maximum of these two barriers is such that $\Delta G^{\ddagger}_{\text{bnd}} = \Delta G^{\ddagger}_{\text{rel}}$. This leads to a shorter cycling time, but $\Delta G^{\ddagger}_{\text{act}}$ is unchanged, and, as in the case represented here, may remain the limiting barrier.

Single-state uniform binding

The most restrictive constraint is to assume uniform binding, where the interaction between the reactant and the catalyst is independent of the state of the reactant and described by a single parameter $\Delta G_u \leq 0$, such that

$$\Delta G_S = \Delta G_{S^{\ddagger}} = \Delta G_P = \Delta G_u. \tag{16}$$

This constraint represents, in particular, the interaction of an enzyme with a non-reactive substrate handle, which is independent of the chemical state of the reactive part of the substrate. Since catalysis ($k_{\text{cat}} > k_0$) requires $\Delta G^{\ddagger}_{\text{uncat}} < \Delta G^{\ddagger}_{\text{act}}$ and since uniform binding leaves $\Delta G^{\ddagger}_{\text{uncat}}$ unchanged [see Eq. (14)], such uniform binding cannot confer catalysis [14]. As proposed by Albery and Knowles [24], it can, however, be beneficial when complementing a pre-existing catalytic mechanism. Adding uniform binding $\Delta G_u \leq 0$ to a pre-existing catalytic mechanisms with intrinsic barriers $\Delta G^{\ddagger *}_{\text{bnd}}$, $\Delta G^{\ddagger *}_{\text{act}}$ and $\Delta G^{\ddagger *}_{\text{rel}}$ indeed leads to

$$\begin{aligned} \Delta G^{\ddagger}_{\text{bnd}} &= \Delta G^{\ddagger *}_{\text{bnd}} + \Delta G_u \\ \Delta G^{\ddagger}_{\text{act}} &= \Delta G^{\ddagger *}_{\text{act}}, \\ \Delta G^{\ddagger}_{\text{rel}} &= \Delta G^{\ddagger *}_{\text{rel}} - \Delta G_u, \end{aligned} \tag{17}$$

i.e., a reduction of the binding/activation barrier $\Delta G^{\ddagger}_{\text{bnd}}$ at the expense of an equal increase of the release barrier $\Delta G^{\ddagger}_{\text{rel}}$. This is advantageous when $\Delta G^{\ddagger}_{\text{bnd}}$ is limiting. Since the lower the $[S]$ substrate concentration, the higher $\Delta G^{\ddagger}_{\text{bnd}}$, this scenario depends critically on the substrate concentration and applies when this concentration is sufficiently low, namely when $\Delta G^{\ddagger *}_{\text{bnd}} > \Delta G^{\ddagger *}_{\text{rel}}$ (Fig. 2 and SM Sec. 4). The optimal value of ΔG_u is reached when $\Delta G^{\ddagger}_{\text{bnd}} = \Delta G^{\ddagger}_{\text{rel}}$. Albery and Knowles argued that this effect explains most of the improvement of triosephosphate isomerase provides over a non-enzymatic catalyst [24].

Single-state differential binding

A less stringent constraint than uniform binding is differential binding which accounts for an empirical observation known in chemistry as the Bell-Evans-Polanyi principle [25, 49]. This principle generally relates the difference of activation energies of two related reactions, $\Delta\Delta G^{\ddagger}_{\text{uncat}}$, to the difference of their reaction energies, $\Delta\Delta G^{\text{o}}_{\text{reac}}$, by a linear relationship $\Delta\Delta G^{\ddagger}_{\text{uncat}} = \lambda\Delta\Delta G^{\text{o}}_{\text{reac}}$ with $0 \leq \lambda \leq 1$. In our model where we are comparing reactions in the context of different catalysts, this amounts to assuming that $\Delta G_{S^{\ddagger}}$ is constrained to lie between ΔG_S and ΔG_P, which can also be expressed by a linear relationship,

$$\Delta G_{S^{\ddagger}} = (1-\lambda)\Delta G_S + \lambda\Delta G_P. \tag{18}$$

This constraint formalizes the notion that the transition state $S^{\ddagger}$ has chemical properties that are intermediate between those of the substrate S and the product P. In this view, λ reports the degree to which the transition state $S^{\ddagger}$ is more similar to the product P than to the substrate S. Two independent intrinsic parameters are left, ΔG_S and ΔG_P.

In contrast to uniform binding, differential binding can confer catalysis on its own, but, as we now show, only to a limited extent. To derive this limitation, we express the two kinetic barriers that control k_{cat} as a function of the two tunable parameters ΔG_S and ΔG_P,

$$\begin{aligned} \Delta G^{\ddagger}_{\text{act}} &= \Delta G^{\ddagger}_{\text{uncat}} + \lambda(\Delta G_P - \Delta G_S), \\ \Delta G^{\ddagger}_{\text{rel}} &= -\Delta G_P. \end{aligned} \tag{19}$$

This makes apparent a trade-off between activation and release, which depend with opposite signs on ΔG_P. Increasing $|\Delta G_P|$ decreases $\Delta G^{\ddagger}_{\text{act}}$ but increases $\Delta G^{\ddagger}_{\text{rel}}$ (since $\Delta G_P \leq 0$). This trade-off reflects a well-known principle in heterogeneous catalysis, Sabatier principle, which states that an optimal catalyst must strike a balance between sufficient strong interaction to activate the reactant and sufficient low interaction to facilitate product release [50, 51].

If $|\Delta G_P|$ is low, the barrier limiting k_{cat} is $\Delta G^{\ddagger}_{\text{act}}$ while if it is large it is $\Delta G^{\ddagger}_{\text{rel}}$. The maximal value of k_{cat} is obtained when the two barriers $\Delta G^{\ddagger}_{\text{act}}$ and $\Delta G^{\ddagger}_{\text{rel}}$ are equivalent, which corresponds to

$$\Delta\hat{G}_P = -\frac{\Delta G^{\ddagger}_{\text{uncat}} - \lambda\Delta G_S}{1+\lambda}. \tag{20}$$

Given $\Delta G_S \leq 0$, this implies an upper bound on k_{cat},

$$k_{\text{cat}} \leq e^{-\Delta G^{\ddagger}_{\text{uncat}}/(1+\lambda)}. \tag{21}$$

Under constraints of differential binding, catalysis can thus reduce the activation barrier $\Delta G^{\ddagger}_{\text{uncat}}$ by a factor $(1+\lambda) \leq 2$ at most, which excludes in particular perfect catalysis. This conclusion is verified numerically when sampling the space of possible parameters (SM, Fig. S3A).

Single-state discriminative binding

Here we introduce another form of constraint between ΔG_S, $\Delta G_{S^{\ddagger}}$ and ΔG_P, which we propose to better capture an essential trade-off to which enzymes are subject. Perhaps the

simplest mechanism by which binding can contribute to enzymatic catalysis is indeed a precise and rigid positioning of the reactant, in a configuration that defines an optimal chemical environment for the reaction. However, such precise positioning typically necessitates tight binding of the substrate (high $|\Delta G_S|$), which cannot be achieved through interactions limited to the small reactive part of the substrate. Instead, it must involve other, non-reactive parts of the substrate that are also present in the product, implying that $|\Delta G_P|$ is also high. This type of catalytic mechanism therefore involves a trade-off between the specificity $\Delta G_{S^\ddagger} - \Delta G_S$ and the affinities ΔG_S and ΔG_P. A similar trade-off is expected if alternatively considering catalysis through a strain mechanism, where again high strain is typically coupled to tight binding, irrespectively of the reaction state. To formalize in simple terms this trade-off, we propose to consider that ΔG_S, $\Delta G_{S^\ddagger}$ and ΔG_P are dependent on a single degree of freedom $\Delta G_u \leq 0$ with

$$\begin{aligned} \Delta G_S &= \Delta G_P = \Delta G_u \\ \Delta G_{S^\ddagger} &= (1+\alpha)\Delta G_u \end{aligned} \tag{22}$$

where $\alpha \leq 0$ is a fixed parameter that quantifies the potential for transition-state specificity, with uniform binding (no specificity) corresponding to the limit $\alpha \to 0$. Here, ΔG_u represents uniform binding to the substrate and product, but not to the transition state for which the additional contribution $\alpha \Delta G_u$ is present. We previously studied a simple physics model which displays this type of constraints with $\alpha = 1$ [39]. More generally, we could assume $\Delta G_{S^\ddagger} = \Delta G_u + f(\Delta G_u)$ where $f(\Delta G_u) \leq 0$ is an increasing function of ΔG_u that can take arbitrary low values. However, as in the case of differential binding where we limited the analysis to a linear relationship, the phenomenology is already captured by the linear function $f(\Delta G_u) = \alpha \Delta G_u$.

Under the constraints of Eq. (22), which we call discriminative binding, the two barriers controlling k_{cat} are

$$\begin{aligned} \Delta G^\ddagger_{\text{act}} &= \Delta G^\ddagger_{\text{uncat}} + \alpha \Delta G_u \\ \Delta G^\ddagger_{\text{rel}} &= -\Delta G_u. \end{aligned} \tag{23}$$

A trade-off consistent with Sabatier principle is again obtained, where a decrease of the activation barrier is coupled to an increase of the release barrier. As previously, the minimum of $\max(\Delta G^\ddagger_{\text{act}}, \Delta G^\ddagger_{\text{rel}})$ is obtained when $\Delta G^\ddagger_{\text{act}} = \Delta G^\ddagger_{\text{rel}}$ which corresponds to $\Delta \hat{G}_u = \Delta G^\ddagger_{\text{uncat}}/(1+\alpha)$. This implies an upper bound on k_{cat}, namely

$$k_{\text{cat}} \leq e^{-\Delta G^\ddagger_{\text{uncat}}/(1+\alpha)}, \tag{24}$$

and therefore a lower bound on the cycling time, as can also be verified numerically (SM, Fig. S3C). In particular, perfect catalysis is again excluded under this scenario.

Constraints and limitations on two-state catalysis

Enzymes can adopt different conformations with different binding free energies for the same ligand, a property that is key to allostery [38]. Here, we analyze how the presence of two such conformations can contribute to overcome the limitations of catalysts with a single conformation. We take the two states of the catalyst, denoted C_0 and C_1, to be associated

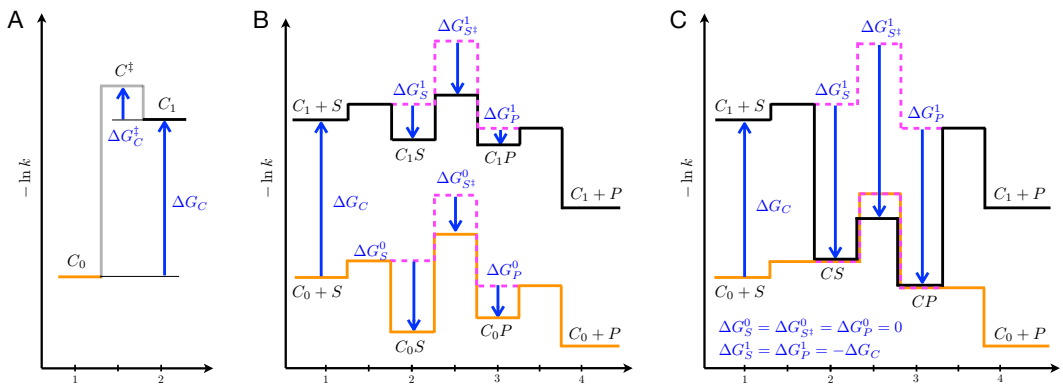

FIG. 3: Two-state catalysis. **A.** A catalyst can be in two states, a low-free-energy conformation C_0 and a high-free-energy conformation C_1. The transitions between these states are parametrized by the free energy differences $\Delta G_C \geq 0$ and $\Delta G_C^\ddagger \geq 0$. **B.** Kinetic barrier diagram representing the transitions within each state of a two-state catalyst. The transitions between the two conformations – corresponding to the horizontal transitions of the two-dimensional network of Eq. (27) – are not represented, which would require introducing a third dimension. As in Fig. 1, the intrinsic parameters are represented by blue arrows and the energy levels for a non-interacting catalyst subject to the same extrinsic conditions are represented by pink dotted lines. **C.** Particular case where C_0 is inactive ($\Delta G_S^0 = \Delta G_{S^\ddagger}^0 = \Delta G_P^0 = 0$) and where binding in C_1 compensates for the cost of the conformational change ($\Delta G_S^1 = \Delta G_P^1 = -\Delta G_C$), so that C_0S and C_1S have same free energy, and so do C_0P and C_1P. Assuming further that $\Delta G_C^\ddagger = 0$, each of these pairs of states can be treated as a single state, here denoted CS and CP.

with different sets of binding free energies, respectively ΔG_S^0, $\Delta G_{S^\ddagger}^0$, ΔG_P^0 and ΔG_S^1, $\Delta G_{S^\ddagger}^1$, ΔG_P^1, and we assume that constraints due to chemical similarity between reaction states apply independently in each state of the catalyst. C_0 is taken to represent the state of lowest free energy and we describe the transition between the two catalytic states similarly to the spontaneous reaction as

$$C_0 \underset{k_{-c}}{\overset{k_c}{\rightleftharpoons}} C_1. \tag{25}$$

Again, we parametrize the rates with a free energy difference $\Delta G_C \geq 0$ and an internal barrier $\Delta G_C^\ddagger \geq 0$, such that (Fig. 3A)

$$k_c = e^{-(\Delta G_C + \Delta G_C^\ddagger)}, \qquad k_{-c} = e^{-\Delta G_C^\ddagger}. \tag{26}$$

Generalizing Eq. (4), a catalyst in presence of substrates can be in eight possible states that are interconnected in a two-dimensional network of transitions of the form

$$\begin{array}{ccccccc} C_1+S & \longleftrightarrow & C_1S & \longleftrightarrow & C_1P & \longleftrightarrow & C_1+P \\ \updownarrow & & \updownarrow & & \updownarrow & & \updownarrow \\ C_0+S & \longleftrightarrow & C_0S & \longleftrightarrow & C_0P & \longleftrightarrow & C_0+P. \end{array} \tag{27}$$

The number of intrinsic parameters, which was 3 for single-state catalysts, is 8 for two-state catalysts, namely ΔG_C, $\Delta G_C^\ddagger$ and ΔG_X^σ for $X = S, S^\ddagger, P$ and $\sigma = 0, 1$ (blue arrows in Fig. 3A-B).

The derivation of an analytical formula for the cycling time in the most general case is laborious, but to demonstrate the possibility of reaching the diffusion limit, it suffices to expose a particular case where this limit is reached. This particular case can be obtained under conditions justifying approximations that simplify the analysis. First, the network of Eq. (27) contains many paths from C_0+S to C_0+P but one typically drives most of the flux, which makes possible an approximation of the dynamics by a one-dimensional succession of transitions. This is the case in the limit in which we focus here, where ΔG_C is sufficiently large for the states C_1+S and C_1+P to have negligible probabilities compared to C_0+S and C_0+P, and where $\Delta G_S^0 - \Delta G_{S^\ddagger}^0 \ll \Delta G_{\text{uncat}}^\ddagger$ so that C_0 is catalytically inactive and the transition $C_0S \to C_0P$ therefore negligible. In this limit, the dominant path in Eq. (27) is

$$C_0 + S \underset{k_{-1}}{\overset{k_1}{\rightleftharpoons}} C_0S \underset{k_{-2}}{\overset{k_2}{\rightleftharpoons}} C_1S \underset{k_{-3}}{\overset{k_3}{\rightleftharpoons}} C_1P \underset{k_{-4}}{\overset{k_4}{\rightleftharpoons}} C_0P \underset{k_{-5}}{\overset{k_{+5}}{\rightleftharpoons}} C_0 + P, \tag{28}$$

and the cycling time can be computed using Eq. (9) with $N = 4$ intermediate states.

With further assumptions, however, the dynamics can be described by an even simpler model with just $N = 2$ intermediate states. For $C_0 + S \to C_1 + S$ to be negligible but not $C_0S \to C_1S$, the "cost" ΔG_C of the conformational change must indeed be offset by a nearly equivalent gain in binding free energy, with $\Delta G_C + \Delta G_S^1 \simeq \Delta G_S^0$. When this compensation takes place and when $\Delta G_C^\ddagger$ is negligible, the interconversion $C_0S \rightleftharpoons C_1S$ occurs on a fast time scale, and the two states C_0S and C_1S can be treated as a single state CS. If, further, $\Delta G_P^0 \simeq \Delta G_S^0$ and $\Delta G_P^1 \simeq \Delta G_S^1$, as it is necessarily the case when considering either uniform or discriminative binding, the same argument applies to the interconversion $C_0P \rightleftharpoons C_1P$, and the number of intermediate states is reduced to $N = 2$. Under these different assumptions that may be summarized by

$$\Delta G_C^\ddagger = 0 \qquad (C_1 \to C_0 \text{ occurs instantaneously}) \tag{29}$$

$$\Delta G_S^0 = \Delta G_{S^\ddagger}^0 = \Delta G_P^0 = 0 \qquad (\text{state } C_0 \text{ is inactive}) \tag{30}$$

$$\Delta G_S^1 = \Delta G_P^1 = -\Delta G_C \qquad (\text{binding in } C_1 \text{ compensates for the conformational change}) \tag{31}$$

where equalities can be relaxed to differences of order RT, the dynamics is effectively described by

$$C_0 + S \underset{k_{-1}}{\overset{k_1}{\rightleftharpoons}} \Big[C_0S \rightleftharpoons C_1S\Big] \underset{k_{-2}}{\overset{k_2}{\rightleftharpoons}} \Big[C_1P \rightleftharpoons C_0P\Big] \underset{k_{-3}}{\overset{k_3}{\rightleftharpoons}} C_0 + P, \tag{32}$$

where the states within brackets are not distinguished, and define two effective states CS and CP (Fig. 3C). Formally, the kinetics is then equivalent to that describing single-state catalysis in Eq. (4).

In enzymes, the compensation between ΔG_C and $\Delta G_S^1 = \Delta G_P^1$ required for Eq. (31) to hold can for instance take the form of an enthalpy-entropy compensation [52] between a high-entropy "open" state C_0S where S is loosely bound to a flexible conformation C_0 of the catalyst, and a high-enthalpy "closed" state where S is tightly bound to a rigid conformation C_1 of the catalyst, in which case ΔG_C represents an entropic cost. Alternatively, or additionally, ΔG_C can represent a desolvation free energy from a solvated conformation C_0 to a desolvated conformation C_1 [53].

As we now show, it is precisely in the conditions described by Eqs (29)-(30)-(31) where the kinetics of two-state catalysis is formally equivalent to that of single-state catalysis that the presence of two underlying states makes an essential difference. While Eq. (4) applies in both cases, the way in which the kinetic rates depend on intrinsic parameters are not the same, and the trade-offs at play are radically different.

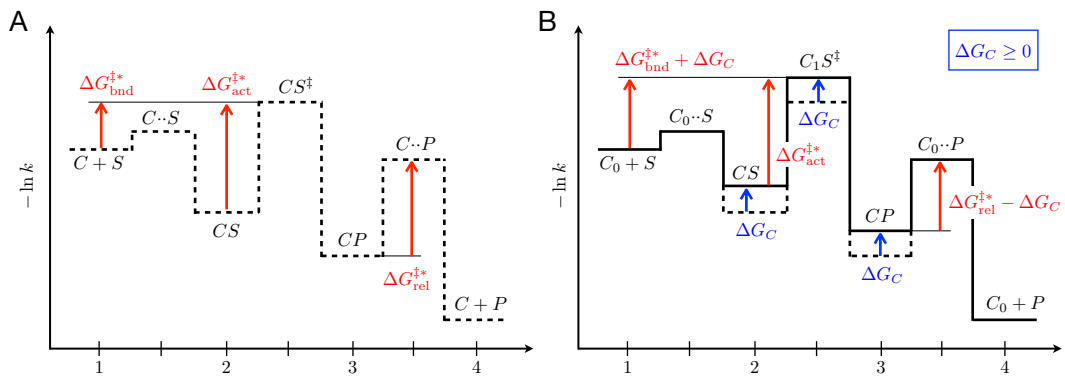

FIG. 4: Two-state uniform binding. **A.** A pre-existing catalytic mechanism is assumed where $\Delta G^{\ddagger *}_{\rm rel} > \Delta G^{\ddagger *}_{\rm bnd}$, a situation opposite to Fig. 2A. **B.** Under the conditions of Fig. 3C with the further assumption that C_1 binds uniformly to all reaction states, i.e., $\Delta G^1_S = \Delta G^1_{S^{\ddagger}} = \Delta G^1_P = -\Delta G_C$, the only designable parameter is $\Delta G_C > 0$, which can be chosen to have $\Delta G^{\ddagger}_{\rm bnd} = \Delta G^{\ddagger}_{\rm rel} < \Delta G^{\ddagger *}_{\rm rel}$, thus effectively reducing the cycling time T_c. It does not affect, however, $\Delta G^{\ddagger *}_{\rm act}$ which, as in the case represented here, may remain the limiting barrier.

Two-state uniform binding

With single-state catalysts, we saw that uniform binding cannot confer catalysis by itself but can improve on a pre-existing catalytic mechanism by decreasing $\Delta G^{\ddagger}_{\rm bnd}$ at the expense of $\Delta G^{\ddagger}_{\rm rel}$, which is valuable when the substrate concentration is low (Fig. 2). With two-state catalysts, uniform binding within each state cannot confer catalysis either, but, as we now show, it can improve on a pre-existing catalytic mechanism in the opposite case where release is limiting, by decreasing $\Delta G^{\ddagger}_{\rm rel}$ at the expense of $\Delta G^{\ddagger}_{\rm bnd}$, which is valuable when the substrate concentration is high.

This is achieved under the assumptions of Eqs. (29)-(30)-(31) that lead to an effectively unidimensional catalytic process with $N = 2$ states described by Eq. (32) and Fig. 3C. Under these assumptions the only free intrinsic parameter is $\Delta G_C \geq 0$. This parameter modifies the intrinsic barriers $\Delta G^{\ddagger *}_{\rm bnd}$, $\Delta G^{\ddagger *}_{\rm act}$ and $\Delta G^{\ddagger *}_{\rm rel}$ of a pre-existing catalytic mechanism into (Fig. 4).

$$\Delta G^{\ddagger}_{\rm bnd} = \Delta G^{\ddagger *}_{\rm bnd} + \Delta G_C \tag{33}$$
$$\Delta G^{\ddagger}_{\rm act} = \Delta G^{\ddagger *}_{\rm act}, \tag{34}$$
$$\Delta G^{\ddagger}_{\rm rel} = \Delta G^{\ddagger *}_{\rm rel} - \Delta G_C. \tag{35}$$

We thus obtain that $\Delta G_C \geq 0$ plays exactly the same role as the uniform binding energy $\Delta G_u \leq 0$ for a one-state catalyst (Eq. (17) and Fig. 2), except that it has opposite sign and therefore opposite effects (Fig. 4): it lowers the release barrier at the expense of the binding/activation barrier $\Delta G^{\ddagger *}_{\rm bnd}$. Provided $\Delta G^{\ddagger *}_{\rm rel} > \Delta G^{\ddagger *}_{\rm bnd}$, which occurs for sufficiently high substrate concentrations, a two-state mechanism is therefore advantageous, with an optimal value of ΔG_C given by $\Delta \hat{G}_C = (\Delta G^{\ddagger *}_{\rm rel} - \Delta G^{\ddagger *}_{\rm bnd})/2$. Furthermore, while uniform binding can only lower $k_{\rm cat}$ in the context of a single-state catalyst, it can increase it in the context of a two-state catalyst, since $k_{\rm cat}$ depends on $\Delta G^{\ddagger}_{\rm rel}$ but not on $\Delta G^{\ddagger}_{\rm bnd}$. This is an example of a possibility that a conformational change offers beyond what rigid catalysts can

possibly achieve. However, in this scenario as in Albery and Knowles' original scenario [24], $\Delta G^{\ddagger}_{\text{cat}}$ remains unchanged, and a pre-existing catalytic mechanism must be assumed for any catalysis to take place.

Two-state differential binding

For a single-state catalyst, we saw that the constraint of differential binding sets a lower bound on the cycling time of the form $T_c \geq e^{\Delta G^{\ddagger}_{\text{uncat}}/(1+\lambda)}$, which excludes, in particular, perfect catalysis. As can be shown analytically and numerically (SM, Sec. 5 and Fig. S3D), the same bound applies to a two-state catalyst when each of its states is subject to the same constraint of differential binding, i.e., $\Delta G^0_{S^\ddagger} = (1-\lambda)\Delta G^0_S + \lambda \Delta G^0_P$ and $\Delta G^1_{S^\ddagger} = (1-\lambda)\Delta G^1_S + \lambda \Delta G^1_P$. Under such constraints, the presence of two states cannot alleviate the fundamental limitations of single-state catalysts.

Two-state discriminative binding

In contrast, under constraints of discriminative binding where, in each state of the catalyst, arbitrary specificity to the transition state can be achieved at the expense of tight binding to the substrate and product, a two-state catalyst can overcome the limitations of single-state catalysis. Formally, the constraints of Eq. (22) are extended to two-state catalysts by imposing $\Delta G^0_{S^\ddagger} = \alpha \Delta G^0_S = \alpha \Delta G^0_P$ and $\Delta G^1_{S^\ddagger} = \alpha \Delta G^1_S = \alpha \Delta G^1_P$. Catalytic "perfection" can even be reached (Fig. S3E). This is again achieved under the assumptions of Eqs. (29)-(30)-(31) that lead to an effectively unidimensional catalytic process with $N = 2$ states described by Eq. (32) and Fig. 3C. These assumptions leave only one designable parameter, namely $\Delta G_C \geq 0$. As illustrated in Fig. 5 for the case $\Delta G^{\text{o}}_{\text{reac}} \leq 0$, choosing this parameter to satisfy $\Delta G^{\ddagger}_{\text{uncat}} \leq \alpha \Delta G_C \leq \Delta G^{\ddagger}_{\text{uncat}} - \Delta G^{\text{o}}_{\text{reac}}$, i.e., if the reaction is irreversible ($\Delta G^{\text{o}}_{\text{reac}} = -\infty$),

$$\Delta G_C \geq \Delta G^{\ddagger}_{\text{uncat}}/\alpha \tag{36}$$

makes negative all barriers along the path $C_0 + S \to C_0S \to C_1S \to C_1P \to C_0P \to C_0 + P$, except for the inevitable extrinsic barrier associated with diffusion at the first step $C_0 + S \to C_0S$. Further, no state outside of this path is a kinetic trap: $C_1 + S$ relaxes to $C_0 + S$ without kinetic barrier and similarly for $C_0S^\ddagger$ to $C_1S^\ddagger$ and $C_1 + P$ to $C_0 + P$.

This design can be understood as decoupling the activation and release steps, which are in trade-off in the other scenarios: activation is made to occur in one state of the catalyst – the active state C_1 with a large binding free energy $\Delta G^1_{S^\ddagger}$ – while product release is made to occur in a different state – the inactive state C_0 with negligible binding free energy ΔG^0_P. The switch between the two states is itself made barrier-less by introducing a large energy difference ΔG_C between C_0 and C_1 that compensates for ΔG^1_S and ΔG^1_P, thus making the transitions $C_0S \to C_1S$ and $C_1P \to C_0P$ barrier-less. By this mechanism, Sabatier principle is abolished and perfect catalysis reached despite constraints of discriminative binding within each state of the catalyst. We previously illustrated this principle in a simple physics model [39] where we assumed $\Delta G^{\text{o}}_{\text{reac}} < 0$, but it applies more generally to spontaneous reactions with arbitrary values of $\Delta G^{\text{o}}_{\text{reac}} < \Delta G^{\ddagger}_{\text{uncat}}$, including cases where $\Delta G^{\text{o}}_{\text{reac}} > 0$, in which case Eq. (36) must be replaced by $\Delta G^{\ddagger}_{\text{uncat}} - \Delta G^{\text{o}}_{\text{reac}} \leq \alpha \Delta G_C \leq$

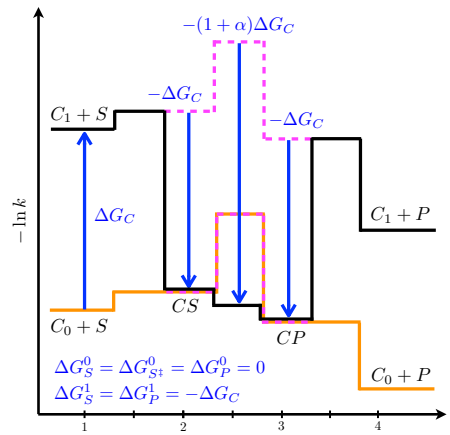

FIG. 5: Perfect catalysis with two-state discriminative binding. We consider as in Fig. 3C a design verifying the conditions of Eqs. (29)-(30)-(31) so that the interconversions $C_0S \rightleftharpoons C_1S$ and $C_0P \rightleftharpoons C_1P$ are instantaneous and define two effective states CS and CP. Under constraints of discriminative binding, the difference $\Delta G^1_{S^\ddagger} - \Delta G^1_S = -\alpha\Delta G_C$ can take arbitrary low values provided ΔG_C is large enough. A value of ΔG_C can thus be chosen so that $C_1S \to C_1P$ is barrierless. In cases where $\Delta G^{\mathrm{o}}_{\mathrm{reac}} < 0$, as illustrated here, this leaves, as the only kinetic barrier, the barrier associated with the diffusion of the substrate towards the catalyst, $C_0 + S \to C_0S$. Perfect catalysis is then achieved that is only diffusion-limited.

$\Delta G^{\ddagger}_{\mathrm{uncat}}$, and perfect catalysis can be limited by the thermodynamical barrier $\Delta G^{\mathrm{o}}_{\mathrm{reac}}$ when this barrier exceeds the diffusion barrier $-\ln(k_d[S])$ (SM, Sec. 3).

CONCLUSION

Following and extending previous works by Albery and Knowles [24, 30], we analyzed the principles underlying enzymatic activities by treating catalysis as a modulation of kinetic barriers under constraints on the capacity to discriminate transition states from substrates and products. In the absence of such discrimination, unimolecular reactions cannot be catalyzed [14], but Albery and Knowles proposed that adding a non-discriminative interaction to a pre-existing catalytic mechanism was the predominant mechanism by which enzymes outperform chemical catalysts made up of small molecules [24, 30]. They further noted that such "uniform binding" was readily evolutionarily accessible through interactions with non-reactive "handles" that are part of many biological reactants. They contrasted this form of uniform binding with "differential binding", where the affinity to the transition state is constrained to be intermediate between the affinities to the substrate and to the product, as commonly observed in chemistry [25, 49]. Here, we revisited this constraint of differential binding to demonstrate that it sets an upper bound on catalytic efficiency which excludes "perfect" catalysis, where rate acceleration is only limited by thermodynamics and diffusion. We pointed out that this limitation stems from the same trade-off between activation and release that is widely observed in heterogeneous catalysis where it underscores Sabatier principle of optimal catalysis [54].

To explain how enzymes can escape this trade-off and possibly reach perfection, we ex-

tended the model in two ways. First, we proposed that enzymes are better understood as subject to another form of constraints, which we called discriminative binding, where arbitrary specificity to the transition state is achievable but at the expense of increasingly large affinities to the substrate and product. This constraint formalizes the notion that high specificity to the transition state requires precise and rigid positioning of the substrate, which is possible only through strong interactions with non-reactive parts of the reactant that are common to the substrate and product. Second, we extended the analysis to catalysts that can be in several states, with different affinities to reactants in their different conformational states. This formalizes the observation that many enzymes undergo conformational changes and have catalytic activities that depend on their conformation, a property generally associated with allostery [21]. Our main conclusion is that two-state catalysts can overcome the limitations of single-state catalysts when subject to constraints of discriminative binding, but we also showed that two-state catalysts can exploit uniform binding to achieve the opposite effect of single-state catalysts, namely facilitating product release at the expense of a weaker enzyme-substrate association.

Our results demonstrate how conformational changes can play an essential role in catalysis, given constraints from chemical similarity between reaction states alone. This is to be contrasted with explanations for conformational changes in enzymes that refer to other types of constraints, e.g., constraints from substrate specificity, as in Koshland's induced fit model [19, 20], constraints from geometry, as in models where a conformational change allows the enzyme to enclose a substrate without compromising its binding and release [15, 55], or constraints from regulation, as in many justifications of allostery [21]. This is also to be contrasted with proposals where conformational changes accelerate the chemical step through rate-promoting vibrations [56]. Our model is based on a definition of catalytic efficiency that takes into account the complete catalytic cycle, the role of a conformational change being to make the optimization of the chemical step $CS \to CP$ compatible with optimization of the subsequent step of product release $CP \to C + P$. Our model is therefore consistent with rigid active sites being optimal for the chemical step [7, 8].

The two-state architecture that we find conducive to perfect catalysis is peculiar, with a weakly interacting state coexisting with a strongly interacting state of higher free energy. This architecture echoes the description of many enzymes as switching between an entropy rich inactive state and a rigid active state [57], a feature that has directly been observed in single molecule experiments [58]. The model also sets constraints on the free energy cost of the conformational change, which must be commensurate with the activation energy of the spontaneous reaction. To be precise, conformational changes are not strictly necessary to achieve the effects that our model describes: what matters is primarily a free energy difference between two states of the substrate-enzyme complex, which, for instance, may also be achieved through a distortion of the substrate.

The presence of two states with different affinities for a same ligand is a prominent feature of allostery [38]. Allostery, however, usually involves an effector that is distinct from the substrate and that binds at a site remote from the active site [21]. A parallel is made by viewing the substrate as made of two pieces, a reactive part and a non-reactive part, which bind to distinct – although generally not remote – sites of the catalyst, a binding site and an active site. In this "split-site" model [33], the non-reactive substrate handle acts as an allosteric effector. This is a very different role than in Albery and Knowles' mechanism of uniform binding where the substrate handle acts as an entropic trap. For triosephosphate isomerase, the enzyme on which Albery and Knowles built their analysis, but also for several

other enzymes, Richard and collaborators experimentally cut substrates in two pieces and showed that the dissociated non-reactive handles indeed act as allosteric effectors [10, 59]. Recognizing that transitions between conformational changes can play an essential role in catalysis independently of any regulation is consistent with the notion of latent allostery, the presence of cooperative effects preceding the evolution of allosteric regulation [60]. It also suggests an evolutionary scenario in which the coupling between chemical reactions and mechanical motion at work in molecular motors first appeared as a consequence of selective pressures on catalytic efficiency.

The view of substrate handles as enabling multi-state catalysis is closely related to Jencks's proposal that these handles enable the expression in the transition state of an "intrinsic binding energy" which is only partially realized in the substrate-catalyst complex [9]. Our model may in fact be seen as a formalization of this proposal. This formalization provides at least three clarifications. Firstly, our model identifies the constraints under which this mechanism is necessary, namely the chemical similarity between reaction states. Secondly, our model links this mechanism to conformational changes and allostery, and thus provides a rationale for the prevalence of these features in enzymes. As noted previously, other mechanisms can possibly achieve the same effects. Jencks, in fact, downplayed the contribution of conformational changes [61] while emphasizing the role of substrate destabilization [26], but our model indicates that a comparable destabilization of the product is necessary. In our model, not all the forms of destabilization are as conducive to catalysis. In particular, a destabilization stemming from a physical distortion of the bound substrate that is released in the transition state as well as in the product state, which may be considered the "most obvious mechanism of substrate destabilization" [26], cannot achieve perfect catalysis unless another mechanism is present that destabilizes the bound product (SM Sec. 6).

We also noted that optimal two-state catalysis can be kinetically indistinguishable from single-state catalysis, and described by the same Michaelis-Menten kinetics (see Eq. (32)), which can explain why the contribution of conformational changes to enzymatic catalysis is often overlooked. However, the impact of mutations that reduce binding affinity to substrate handles on kinetic parameters depends on the underlying mechanism. Uniform binding predicts that decreasing this affinity increases k_{cat} (or, if the activation barrier $\Delta G^{\ddagger}_{\mathrm{act}}$ dominates, that it leaves it nearly unchanged). Two-state catalysis under constraints of discriminative binding predicts, on the other hand, that k_{cat} decreases when the activation barrier dominates. This latter scenario is in agreement with many observations [9, 12]. Uniform binding and two-state catalysis are, however, non exclusive, and can even be complementary: uniform binding in the inactive state of a two-state enzyme can indeed provide the same benefits as uniform binding in a single-state enzyme under conditions of low substrate concentrations, by trading a slower release for a more efficient substrate capture. A role for conformational changes in catalysis is also not excluding other roles concomitantly played by the same conformational change, e.g., a role in enclosing the substrate and/or enabling regulation of the enzyme activity. Different scenarios have, however, important differences from an evolutionary perspective. Optimal uniform binding requires a fine-tuned affinity to the handle that depends on substrate concentration, on properties of the spontaneous reaction and on the catalytic mechanism, while optimal two-state binding requires primarily an affinity that compensates for the cost of the conformational change with a value that is only loosely constrained by the activation free energy of the spontaneous reaction. Such a mechanism opens the possibility for an enzyme to adapt to catalyze a new reaction while preserving the same two-state mechanism if the new and old substrates share the same handle. This possibility

is consistent with the repeated attachment of the same handles to many substrates, e.g., phosphate handles to metabolites [62], as well as with the concomitant reutilization of the same folds, e.g., TIM barrels [63], in enzymes catalyzing different reactions.

The approach that we followed to rationalize enzyme mechanisms focuses on the constraints imposed by chemical similarity between reaction states. The importance of these constraints is well-recognized in heterogeneous catalysis, where they take the form of Sabatier principle [54]. This qualitative principle states that an optimal catalyst must strike a compromise between high affinities that lower the activation energy and low affinities that favor product release. Our analysis recovers this trade-off when the catalyst is single-state, whether the constraints take the form of differential binding or discriminative binding. Chemical constraints have been particularly studied for transition-metal catalysis, where they are found to follow scaling relationships, with a few "descriptors" linearly controlling the binding affinity of the catalytic surface to the different reaction states when comparing surfaces made of different metallic elements [42, 48]. In the context of the unimolecular reaction that we studied, this corresponds to the observation that transition-state and product affinities are both linearly related to substrate affinity, i.e., $\Delta G_{S^\ddagger} = a_{S^\ddagger}\Delta G_S$ and $\Delta G_P = a_P \Delta G_S$ with factors $a_{S^\ddagger} \geq 0$ and $a_P \geq 0$ that depend on the geometry of the surface but relate surfaces made of different metals. Formally, such scaling relations encompass uniform binding when $a_{S^\ddagger} = a_P = 1$, pure substrate stabilization when $1 < a_{S^\ddagger} = a_P$ (SM Sec. 6), differential binding when $1 < a_{S^\ddagger} < a_P$, and discriminative binding when $1 = a_P < a_{S^\ddagger}$. As we have shown, transitions between states allow for perfect catalysis in this later case, but also, more generally, whenever $a_P \leq 1 < a_{S^\ddagger}$ (SM Sec. 7). In the light of our model, the implementation of multiple states could overcome some of the limitations currently encountered in heterogeneous catalysis, but also in the design of new enzymes [64] where transitions between states is not currently envisaged.

Acknowledgments

The author thanks Yann Sakref for comments, and ANR-21-CE45-0033, ANR-22-CE06-0037 for funding.

---

[1] Hammes, G. G. Multiple conformational changes in enzyme catalysis. *Biochemistry* **41**, 8221–8228 (2002).

[2] Yang, H. *et al.* Protein conformational dynamics probed by single-molecule electron transfer. *Science* **302**, 262–266 (2003).

[3] Eisenmesser, E. Z. *et al.* Intrinsic dynamics of an enzyme underlies catalysis. *Nature* **438**, 117–121 (2005).

[4] Kamerlin, S. C. L. & Warshel, A. At the dawn of the 21st century: Is dynamics the missing link for understanding enzyme catalysis? *Proteins: Structure, Function, and Bioinformatics* **78**, 1339–1375 (2010).

[5] Glowacki, D. R., Harvey, J. N. & Mulholland, A. J. Taking Ockham's razor to enzyme dynamics and catalysis. *Nature chemistry* **4**, 169–176 (2012).

[6] Kohen, A. Role of dynamics in enzyme catalysis: substantial versus semantic controversies. *Accounts of chemical research* **48**, 466–473 (2015).

[7] Tunon, I., Laage, D. & Hynes, J. T. Are there dynamical effects in enzyme catalysis? Some thoughts concerning the enzymatic chemical step. *Archives of Biochemistry and Biophysics* **582**, 42–55 (2015).

[8] Warshel, A. & Bora, R. P. Perspective: Defining and quantifying the role of dynamics in enzyme catalysis. *The Journal of Chemical Physics* **144**, 180901 (2016).

[9] Jencks, W. P. Binding energy, specificity, and enzymatic catalysis: the Circe effect. *Advances in Enzymology - and Related Areas of Molecular Biology* **43**, 219–410 (1975).

[10] Fernandez, P. L., Nagorski, R. W., Cristobal, J. R., Amyes, T. L. & Richard, J. P. Phosphodianion Activation of Enzymes for Catalysis of Central Metabolic Reactions. *Journal of the American Chemical Society* **143**, 2694–2698 (2021).

[11] Moore, S. A. & Jencks, W. P. Formation of active site thiol esters of CoA transferase and the dependence of catalysis on specific binding interactions. *Journal of Biological Chemistry* **257**, 10893–10907 (1982).

[12] Hedstrom, L. Serine Protease Mechanism and Specificity. *Chemical Reviews* **102**, 4501 – 4524 (2002).

[13] Pauling, L. Nature of Forces between Large Molecules of Biological Interest. *Nature* **161**, 707–709 (1948).

[14] Noor, E. *et al.* Uniform binding and negative catalysis at the origin of enzymes. *Protein Science* **31**, e4381 (2022).

[15] Wolfenden, R. Enzyme catalysis: conflicting requirements of substrate access and transition state affinity. *Molecular and cellular biochemistry* **3**, 207–211 (1974).

[16] Fersht, A. *Structure and mechanism in protein science: a guide to enzyme catalysis and protein folding* (Macmillan, 1999).

[17] Smith, A. J. T. *et al.* Structural reorganization and preorganization in enzyme active sites: comparisons of experimental and theoretically ideal active site geometries in the multistep serine esterase reaction cycle. *Journal of the American Chemical Society* **130**, 15361 – 15373 (2008).

[18] Boehr, D. D., McElheny, D., Dyson, H. J. & Wright, P. E. The Dynamic Energy Landscape of Dihydrofolate Reductase Catalysis. *Science* **313**, 1638–1642 (2006).

[19] Koshland, D. E. Application of a Theory of Enzyme Specificity to Protein Synthesis. *Proceedings of the National Academy of Sciences* **44**, 98 – 104 (1958).

[20] Herschlag, D. The role of induced fit and conformational changes of enzymes in specificity and catalysis. *Bioorganic Chemistry* **16**, 62–96 (1988).

[21] Monod, J., Changeux, J.-P. & Jacob, F. Allosteric proteins and cellular control systems. *Journal of Molecular Biology* **6**, 306 – 329 (1963).

[22] Westheimer, F. H. Why Nature Chose Phosphates. *Science* **235**, 1173–1178 (1987).

[23] Gerlt, J. A. Evolution of Enzyme Function and the Development of Catalytic Efficiency: Triosephosphate Isomerase, Jeremy R. Knowles, and W. John Albery. *Biochemistry* **60**, 3529–3538 (2021).

[24] Albery, W. J. & Knowles, J. R. Evolution of enzyme function and the development of catalytic efficiency. *Biochemistry* **15**, 5631–5640 (1976).

[25] Jencks, W. P. A primer for the Bema Hapothle. An empirical approach to the characterization of changing transition-state structures. *Chemical Reviews* **85**, 511–527 (1985).

[26] Jencks, W. P. Destabilization is as important as binding. *Philosophical Transactions of the Royal Society of London. Series A: Physical and Engineering Sciences* **345**, 3–10 (1993).

[27] Hertel, K. J., Peracchi, A., Uhlenbeck, O. C. & Herschlag, D. Use of intrinsic binding energy

for catalysis by an RNA enzyme. *Proceedings of the National Academy of Sciences* **94**, 8497–8502 (1997).

[28] Amyes, T. L., Malabanan, M. M., Zhai, X., Reyes, A. C. & Richard, J. P. Enzyme activation through the utilization of intrinsic dianion binding energy. *Protein Engineering, Design and Selection* **30**, 159–168 (2016).

[29] Richard, J. P. Protein Flexibility and Stiffness Enable Efficient Enzymatic Catalysis. *Journal of the American Chemical Society* **141**, 3320–3331 (2019).

[30] Burbaum, J. J., Raines, R. T., Albery, W. J. & Knowles, J. R. Evolutionary optimization of the catalytic effectiveness of an enzyme. *Biochemistry* **28**, 9293–9305 (1989).

[31] Fersht, A. R. Catalysis, binding and enzyme-substrate complementarity. *Proceedings of the Royal Society of London. Series B. Biological Sciences* **187**, 397–407 (1974).

[32] Ellington, A. D. & Benner, S. A. Free energy differences between enzyme bound states. *Journal of Theoretical Biology* **127**, 491–506 (1987).

[33] Menger, F. M. Analysis of ground-state and transition-state effects in enzyme catalysis. *Biochemistry* **31**, 5368–5373 (1992).

[34] Cleland, W. & Northrop, D. B. Energetics of substrate binding, catalysis, and product release. *Methods in Enzymology* **308**, 3–27 (1999).

[35] Kozuch, S. & Shaik, S. How to Conceptualize Catalytic Cycles? The Energetic Span Model. *Accounts of Chemical Research* **44**, 101–110 (2011).

[36] Penocchio, E. & Ragazzon, G. Kinetic barrier diagrams to visualize and engineer molecular nonequilibrium systems. *Small* **19**, 2206188 (2023).

[37] Bearne, S. L. Illustrating Enzyme Inhibition Using Gibbs Energy Profiles. *Journal of Chemical Education* **89**, 732–737 (2012).

[38] Monod, J., Wyman, J. & Changeux, J. P. On the nature of allosteric transitions: a plausible model. *Journal of Molecular Biology* **12**, 88 – 118 (1965).

[39] Rivoire, O. How flexibility can enhance catalysis. *Physical Review Letters* **131**, 088401 (2023).

[40] Vojvodic, A. & Nrskov, J. K. New design paradigm for heterogeneous catalysts. *National Science Review* **2**, 140–149 (2015).

[41] Perez-Ramerez, J. & Lopez, N. Strategies to break linear scaling relationships. *Nature Catalysis* **2**, 971–976 (2019).

[42] Greeley, J. Theoretical Heterogeneous Catalysis: Scaling Relationships and Computational Catalyst Design. *Annual review of chemical and biomolecular engineering* **7**, 605 – 635 (2016).

[43] Knowles, J. R. & Albery, W. J. Perfection in enzyme catalysis: the energetics of triosephosphate isomerase. *Accounts of Chemical Research* **10**, 105–111 (1977).

[44] Ninio, J. Alternative to the steady-state method: derivation of reaction rates from first-passage times and pathway probabilities. *Proceedings of the National Academy of Sciences* **84**, 663–667 (1987).

[45] Sakref, Y., Munoz-Basagoiti, M., Zeravcic, Z. & Rivoire, O. On kinetic constraints that catalysis imposes on elementary processes. *The Journal of Physical Chemistry B* **127**, 10950–10959 (2023).

[46] Cornish-Bowden, A. *Fundamentals of enzyme kinetics* (John Wiley & Sons, 2013).

[47] Pauling, L. Molecular architecture and biological reactions. *Chemical and engineering news* (1946).

[48] Fernandez, E. M. *et al.* Scaling Relationships for Adsorption Energies on Transition Metal Oxide, Sulfide, and Nitride Surfaces. *Angewandte Chemie International Edition* **47**, 4683–4686 (2008).

[49] Jensen, F. *Introduction to computational chemistry* (John Wiley & sons, 2017).

[50] Sabatier, P. *La catalyse en chimie organique* (Libraire Polytechnique, 1913).

[51] Medford, A. J. *et al.* From the sabatier principle to a predictive theory of transition-metal heterogeneous catalysis. *Journal of Catalysis* **328**, 36–42 (2015).

[52] Chodera, J. D. & Mobley, D. L. Entropy-Enthalpy Compensation: Role and Ramifications in Biomolecular Ligand Recognition and Design. *Annual Review of Biophysics* **42**, 121–142 (2013).

[53] Dragan, A. I., Read, C. M. & Crane-Robinson, C. Enthalpy-entropy compensation: the role of solvation. *European Biophysics Journal* **46**, 301–308 (2017).

[54] Medford, A. J., Vojvodic, A. & Hummelshj, J. S. From the Sabatier principle to a predictive theory of transition-metal heterogeneous catalysis. *Journal of Catalysis* **328**, 36 – 42 (2015).

[55] Malabanan, M. M., Amyes, T. L. & Richard, J. P. A role for flexible loops in enzyme catalysis. *Current Opinion in Structural Biology* **20**, 702–710 (2010).

[56] Nashine, V. C., Hammes-Schiffer, S. & Benkovic, S. J. Coupled motions in enzyme catalysis. *Current opinion in chemical biology* **14**, 644–651 (2010).

[57] Riziotis, I. G., Ribeiro, A. J., Borkakoti, N. & Thornton, J. M. Conformational Variation in Enzyme Catalysis: A Structural Study on Catalytic Residues. *Journal of Molecular Biology* **434**, 167517 (2022).

[58] Lu, H. P., Xun, L. & Xie, X. S. Single-Molecule Enzymatic Dynamics. *Science* **282**, 1877–1882 (1998).

[59] Cristobal, J. R. & Richard, J. P. Kinetics and mechanism for enzyme-catalyzed reactions of substrate pieces. *Methods in Enzymology* **685**, 95–126 (2023).

[60] Coyle, S. M., Flores, J. & Lim, W. L. Exploitation of latent allostery enables the evolution of new modes of MAP kinase regulation. *Cell* **154**, 875 – 887 (2013).

[61] Jencks, W. P. Economics of Enzyme Catalysis. *Cold Spring Harbor Symposia on Quantitative Biology* **52**, 65–73 (1987).

[62] Nobeli, I., Ponstingl, H., Krissinel, E. B. & Thornton, J. M. A structure-based anatomy of the E. coli metabolome. *Journal of molecular biology* **334**, 697–719 (2003).

[63] Wierenga, R. The TIM-barrel fold: a versatile framework for efficient enzymes. *FEBS letters* **492**, 193–198 (2001).

[64] Lovelock, S. L. *et al.* The road to fully programmable protein catalysis. *Nature* **606**, 49–58 (2022).

[65] Cao, J. Michaelis-Menten Equation and Detailed Balance in Enzymatic Networks. *The Journal of Physical Chemistry B* **115**, 5493–5498 (2011).