GIN-TONIC: Non-hierarchical full-text indexing for graph-genomes

Ünsal Öztürk,[1,*] Marco Mattavelli[1] and Paolo Ribeca[2,3,4,5]

[1]SCI-STI-MM, EPFL, Route Cantonale, 1015, Lausanne, Switzerland, [2]Biomathematics and Statistics Scotland, The James Hutton Institute, Peter Guthrie Tait Road, EH9 3FD, Edinburgh, United Kingdom, [3]Clinical and Emerging Infection, UK Health Security Agency, 61 Colindale Avenue, NW9 5EQ, London, United Kingdom, [4]NIHR Health Protection Research Unit in Genomics and Enabling Data, University of Warwick, Gibbet Hill Road, CV4 7AL, Coventry, United Kingdom and [5]NIHR Health Protection Research Unit in Gastrointestinal Infections, University of Liverpool, 8 West Derby Street, L69 7BE, Liverpool, United Kingdom
*Corresponding author. unsal.ozturk@epfl.ch

Abstract

This paper presents a new data structure, GIN-TONIC, designed to index arbitrary string-labelled directed graphs representing, for instance, pangenomes or transcriptomes. GIN-TONIC provides several capabilities not offered by other graph-indexing methods based on the FM-index. It is non-hierarchical, handling a graph as a single monolithic object; it indexes at nucleotide resolution all possible walks in the graph without the need to explicitly store them; it supports exact substring queries in polynomial time and space for all possible walk roots in the graph, even if there are exponentially many walks corresponding to such roots. Specific ad-hoc optimisations, such as a precomputed cache, allow GIN-TONIC to achieve excellent performance for input graphs of various topologies and sizes. Robust scalability capabilities and a querying performance close to that of a linear FM-Index are demonstrated for two real-world applications, a human pangenome and transcriptome. Source code and associated benchmarks are available on GitHub.

Availability and implementation: GIN-TONIC and all related programs are available at `https://github.com/uensalo/gin`.

1. Introduction

The importance of being able to represent DNA sequences as complex graphs rather than linear text is well acknowledged in the literature, with increasing attention being given to pangenome-based applications (1; 2; 3; 4). Another relevant use case is transcriptomics, where splicing induces graphs with millions of edges (5).

A data structure commonly used in bioinformatics is the FM-Index (6), which is especially efficient at matching queries against large reference sequences (7; 8; 9). Although implementations of the FM-Index abound, each one striking a different balance between compression and speed (10; 11), a common use for them is to compute the locations of the exact matches of shorter k-mers from a query sequence. This process, which is called seeding, is a common procedure in alignment software (12; 13). However, naïve FM-Index approaches are unable to handle graph genomes.

Aligning reads to graph genomes and pangenomes offers a more comprehensive view of genomic diversity. Algorithmically speaking, however, the central challenge here lies in efficiently indexing these graph structures — unlike linear sequences, graphs can contain complex looping structures and multiple alternative walks, making indexing and alignment more difficult (1; 14) due to the exponential nature of the number of graph walks to be explored (15; 16). An ideal, efficient graph data structure should keep the same good qualities of the FM-Index — notably, the ability to return all the exact matches in polynomial time — while also being able to transparently explore all matches along all possible walks in the graph.

Recent work in graph indexing based on the Burrows-Wheeler transform and the FM-Index includes the vg toolkit (17) and its extensions, which employ the BWT (18), and other extensions of the PBWT (19) for pangenomic-level haplotype indexing (GBWT, gPBWT) (20; 21). Further developments add synthetic haplotypes or greedy graph covers to allow nucleotide-domain indexing (22). HISAT 2 and 3 (23; 24) use a different, hierarchical approach consisting of a global FM-Index for the whole genome and local FM-Indices constructed over smaller genomic regions. In the domain of nucleotide-level indexing, however, neither of these proposals offers guarantees against very complex graphs, meaning that the worst-case scenario might generate very large indices and/or incur very long querying times. Theoretical approaches to fully generalize the combinatorial properties of the Burrows-Wheeler transform to special subclasses of character-labelled graphs have also been proposed. The concept of Wheeler graphs (25) extends the main properties of LF-mapping traversals, establishing properties analogous to those of the Burrows-Wheeler transform, such as the query time being proportional to query length, under the assumption of path coherence and monotonicity. Strategies such as r-indexing (26), tunneling techniques (27), and prefix-free parsing (28), extend the notion of Wheeler graphs to improve performance. Further generalizations are made in (29), in which the authors describe a family of transformations that support matching in FM-Index-like time. A different approach is followed in (30; 31; 32) by considering a relaxation of Wheeler orders to co-lex orders or arbitrary relations, which allows pattern matching on the graph in polynomial time (33). However, scaling to billions of character-labelled nodes remains an algorithmic challenge, rendering algorithmic frameworks based on Wheeler graphs impractical for human-scale pangenomics (15; 16).

Here we introduce a novel data structure called GIN-TONIC (**G**raph **IN**dexing **T**hrough **O**ptimal **N**ear **I**nterval

Compaction). It is designed to handle string-labelled directed graphs of arbitrary topology by indexing all possible string walks without explicitly storing them. Crucially, it allows for efficient exact lookups of substring queries of unrestricted length in polynomial time and space (excluding the size of the output, which may be exponential); it does not require the construction of multiple indices or explicit enumeration of walks, and it easily scales up to human (pan)genomes and transcriptomes. As it stores data in a modified FM-Index, GIN-TONIC may also be used for the compressed indexing of string-labelled graphs.

In particular, the data structure constructs a single modified FM-Index on a text encoding of the graph, allowing for an exact substring matching mechanism with quadratic complexity in the length of the query Q and number of graph vertices V, with a worst-case time complexity of $O(|Q|^2|V|^2 \log |V| + k)$ in $O(|Q||V| + k)$ space per query, where k is the number of occurrences of the query in the graph. This work also describes how such complexity can be further improved to $O(|Q|^2|V| \log |V| + k)$ time by approximating a solution to an NP-complete problem. The index itself can be constructed in $O((|V| + |E|) \log |V| + |\sum_i S_i|)$ time, where $\sum_i |S_i|$ is the total length of the string labels and $|E|$ is the number of edges. The space requirement depends on the FM-Index implementation and could range from compressed to expansive, but never exceeds $O(|V|^2 + |\sum_i S_i|)$.

Finally, we describe an implementation of GIN-TONIC and provide experimental performance results in two biologically relevant use cases: human pangenome and transcriptome. Thanks to the addition of a suitable caching mechanism, GIN-TONIC is able to offer excellent performance despite having reasonable memory requirements. Code and benchmarks can be downloaded from `https://github.com/uensalo/gin`.

2. Methods

2.1. Notations

Strings. A string of length L over the finite alphabet Σ is defined as a sequence of characters $S = s_0 s_1 ... s_{L-1}$ with $s_i \in \Sigma \ \forall i \in \{0, ..., L-1\}$, where $L = |S|$ is the length of the string. We denote the set of all strings over the alphabet Σ as Σ^*, the set of all strings of length L as Σ^L, and the set of all strings up to length L as $\Sigma^{\leq L}$. Strings are indexed starting from 0, and the jth character of a string S is denoted as $S[j-1]$. The rank operation over a string S is defined as $\textsc{Rank}(S, \sigma, i) = \sum_{j=0}^{i} \mathbb{1}\{S[j] = \sigma\}$ where $\sigma \in \Sigma$, and $0 \leq i < |S|$. A substring of a string S over the half open character range $[a, b)$ is denoted as $S[a : b]$ and defined as $s_a ... s_{b-1}$ for $b > a$, $|S| > a > 0$, and $|S| \geq b > 0$; it is taken to be $S[a : b] = \epsilon$ otherwise. $\oplus$ denotes iterative string concatenation, and defined to be $\oplus_{i=1}^{N} S_i = S_1 ... S_N$ similar to the summation operator. $\mathcal{B}(S)$ is the Burrows-Wheeler transform of S.

FM-Index lookup. Given some string query Q, the FM-Index of a string S returns the location of all indices $i_0, ..., i_{m-1}$ such that Q occurs as a substring of S at i_j for $j \in \{0, ..., m-1\}$ through variations of Algorithm 1. The subroutine Advance-Range takes as input a half-open range over the suffix array and uses the LF-mapping to get a progressively refined range by walking through all the characters in the query.

String graphs. A string graph $G(V, E, \mathbb{S})$ is defined as a set of vertices $V = \{V_1, ..., V_N\}$ labelled by non-empty strings $\mathbb{S} = \{S_1, ..., S_N\}$ such that S_i is the label of V_i, and a set of directed edges $E = \{(V_i, V_j) \mid V_i, V_j \in V\}$. The set of incoming neighbors for a vertex V_i is denoted as $\mathcal{N}^-(i)$. A string

Algorithm 1 FM-Index Lookup

```
procedure FMI-Lookup(B(S), F, SA_S, Q)
    [a, b) ← [0, |F|)
    i ← |Q| − 1
    while i ≥ 0 do
        [a, b) ← Advance-Range([a, b), Q[i], F)
        if a ≥ b then
            break
        end if
        i ← i − 1
    end while
    return {SA_S(a), ..., SA_S(b − 1)}
end procedure
```

S is said to be induced or encoded by a string graph $G(V, E, \mathbb{S})$ if there exists a walk $W = V_{i_1} \rightarrow ... \rightarrow V_{i_w}$ on G such that S is a substring of $S_W = S_{i_1} ... S_{i_w}$. Conversely, the strings induced by a walk W are defined to be the set of all substrings of S_W.

2.2. Problem Definition and Approach

The main problem of interest consists of enumerating all the starting points ("roots") from which there exist walks inducing the given query. I.e.:

Definition 1 Let $G(V, E, \mathbb{S})$ be a string graph, and let Q be a non-empty string over a non-empty alphabet Σ. We would like to enumerate all tuples (V_i, o_i), where $V_i \in V$ and $o_i \in \mathbb{N}$, such that there exists a walk $W = V_{a_1} \rightarrow ... \rightarrow V_{a_w}$ with the label concatenation $S_W = S_{a_1} ... S_{a_w}$ satisfying the following:

1. (The root of the walk is V_i) $V_{a_1} = V_i$.
2. (The walk induces Q) $Q = S_W[o_i : o_j]$ for some o_j.
3. (The walk induces Q minimally) $|S_{a_1}| > o_i > 0$ and $\sum_{k=1}^{w} |S_{a_k}| \geq o_j > \sum_{k=1}^{w-1} |S_{a_k}|$.

We define three types of queries, which return:

1. Find: Suffix array ranges corresponding to walk roots
2. Locate: Walk roots in the graph domain as (V_i, o_i)
3. Walk: Reconstructed walks rooted at (V_i, o_i).

Locate queries first call Find queries to find suffix array ranges, and Walk queries call Locate queries to start traversing the graph from walk roots.

2.3. GIN-TONIC

This section defines the data structures used by GIN-TONIC.

Definition 2 GIN-TONIC is a data structure defined as a 4-tuple $(\mathrm{I}_{\mathrm{FMI}}(G, \Pi), R, r_{\sigma_0}, \mathcal{C})$ where:

- $\Pi : \mathbb{N} \rightarrow \mathbb{N}$ is a permutation over the set of vertices of a string graph G.
- $\mathrm{I}_{\mathrm{FMI}}$ is an FM-Index constructed over a *graph encoding* $\mathrm{GE}(G, \Pi)$.
- r_{σ_0} is a lookup table translating ranks of a special character σ_0 in the Burrows-Wheeler domain of the graph encoding $\mathrm{GE}(G, \Pi)$ to corresponding ranks in the text domain.
- R is a data structure mapping ranges of a special character σ_0 to ranges of σ_1 based on E, over $\mathrm{SA}_{\mathrm{GE}(G,\Pi)}$.

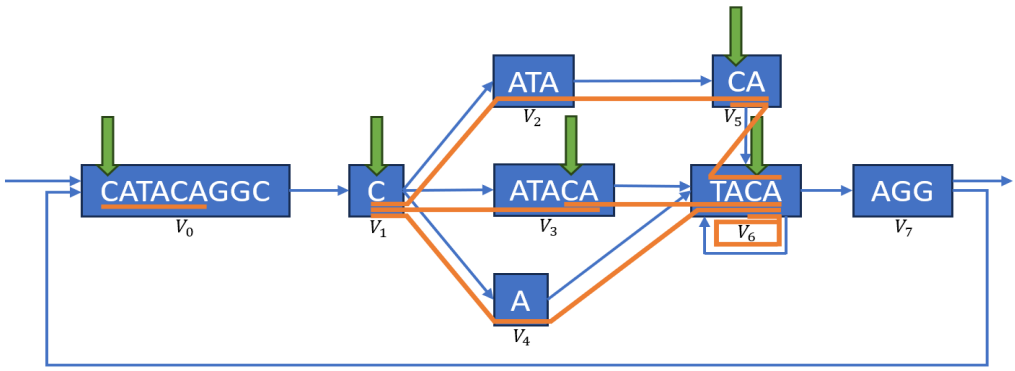

Figure 1. Example segment of a complex region of a string graph. Vertices are denoted with rectangles, edges with arrows, and vertex labels as text inside rectangles representing vertices. Walk roots corresponding to the string CATACA - equivalent to vertex index and offsets - are marked with green arrows. The walks inducing CATACA starting from the marked roots are marked with orange lines. Note that one root may induce multiple walks of the example string, that walks stemming from different roots may partially overlap, and that the same path can contain more than one match. LOCATE queries output all green arrows, and WALK queries output all orange paths.

- $\mathcal{C}$ is an optional, pre-computed cache of suffix array ranges corresponding to all substrings of length $1...d$ induced by the graph.

Definitions for $\mathrm{GE}(G, \Pi)$, r_{σ_0}, R, and C, follow.

2.4. The Graph Encoding

The graph encoding $\mathrm{GE}(G, \Pi)$ of a string graph G over a permutation Π is a string using special reserved characters to encode information on the permutation Π, the string labels $S_i \in \mathbb{S}$ of G, and the mapping between the indices of vertices V of G and the string labels of G. The query algorithm will use the special characters to jump to other vertices when necessary.

Definition 3 The **graph encoding of a string graph** is defined as the following string concatenation:

$$\mathrm{GE}(G(V, E, \mathbb{S}), \Pi) = \sigma_0 S_1 \sigma_1 A_1 \sigma_0 S_2 \sigma_1 A_2 ... \sigma_0 S_N \sigma_1 A_N \epsilon \quad (1)$$

$$= \left(\oplus_{i=1}^{N} (\sigma_0 S_i \sigma_1 A_i) \right) \epsilon \quad (2)$$

where Π denotes some permutation from $\{1, ..., N\}$ to $\{1, ..., N\}$, $S_i \in \mathbb{S}$ are strings over the string label alphabet Σ; $\sigma_0, \sigma_1 \notin \Sigma$ are two special characters respectively indicating the start and end of the string label S_i associated with each vertex V_i, and A_i are strings over another alphabet Σ_Π such that $\Sigma \cap \Sigma_\Pi = \emptyset$ and $\sigma_0, \sigma_1 \notin \Sigma_\Pi$, and the lexical order of A_i depends on Π. Hence, the alphabet of string $\mathrm{GE}(G, \Pi)$ is $\Sigma \cup \Sigma_\Pi \cup \{\sigma_0, \sigma_1\}$. The lexicographic ordering of the alphabet of $\mathrm{GE}(G, \Pi)$ is defined as $\sigma_0 < \sigma_1 < c_{\Sigma_\Pi} < c_\Sigma$ for any $c_{\Sigma_\Pi} \in \Sigma_\Pi, c_\Sigma \in \Sigma$.

Positionally associating each vertex label with a σ_0 and querying its rank allows one to obtain the index of the vertex in the text domain. When traversing the LF-mapping of the graph encoding, encountering a non-empty range of σ_0 indicates that the current match has exhausted one or more vertex labels starting from which the currently matches suffix is induced, and the matching process might succeed by considering incoming neighbors if there are any. This property can be exploited to index all walks on the graph.

2.5. The Range Translator

The range translator R encodes the connectivity of G defined by E in the BW-domain. This is achieved by associating ranges of σ_0, which express edge destinations, to ranges of σ_1, which express edge sources. The query algorithm uses this mapping to traverse multiple vertices whenever necessary during matching.

Definition 4 Given two maps r_{σ_0}, r_{σ_1} that can be computed from $\mathrm{SA}_{\mathrm{GE}(G,\Pi)}$, with r_{σ_0} mapping ranks of σ_0 from $\mathcal{B}(\mathrm{GE}(G, \Pi))$ to $\mathrm{GE}(G, \Pi)$, and r_{σ_1} mapping the ranks of σ_1 from $\mathrm{GE}(G, \Pi)$ to $\mathcal{B}(\mathrm{GE}(G, \Pi))$, the **single-vertex range translator** $R_{\sigma_0} : \mathbb{N} \to 2^{\mathbb{N}}$ is defined as

$$R_{\sigma_0}(i) = \bigcup_{k \in \mathcal{N}^-(r_{\sigma_0}(i))} r_{\sigma_1}(k). \quad (3)$$

R_{σ_0} expresses as ranges of σ_1 in $\mathrm{SA}_{\mathrm{GE}(G,\Pi)}$ the notion of incoming neighbours of a vertex marked with a σ_0. The **range translator** $R : \mathbb{I} \to 2^{\mathbb{I}}$, where $\mathbb{I} = \{[a, b] |\ a, b \in \mathbb{N}, a \leq b\}$, is defined as

$$R([a, b]) = C_{\mathbb{I}} \left(\bigcup_{i=a}^{b} R_{\sigma_0}(i) \right) = C_{\mathbb{I}} \left(\bigcup_{i=a}^{b} \left(\bigcup_{k \in \mathcal{N}^-(r_{\sigma_0}(i))} r_{\sigma_1}(k) \right) \right) \quad (4)$$

where $C_{\mathbb{I}} : 2^{\mathbb{N}} \to 2^{\mathbb{I}}$ is a function compacting a set of natural numbers into a set of intervals. R expresses the incoming neighbors of a range of vertices in $\mathrm{SA}_{\mathrm{GE}(G,\Pi)}$.

We implement R in GIN-TONIC as a binary tree where each node contains a range key $[a, b]$ and a list of intervals as values, called the interval-merge tree (IMT). R can be computed in $\Theta(|V| \log |V|)$ time with $O(|V|)$ space through this tree, which is defined as follows:

1. Each node (denoted with T) is associated with two children nodes, one range, and an interval list.
2. A parent node with a range $[a, b]$ splits its range between its two children: the left child has the key-range $\left[a, \left\lfloor \frac{a+b}{2} \right\rfloor\right]$, the right child has $\left[\left\lfloor \frac{a+b}{2} + 1 \right\rfloor, b\right]$.

3. Leaf nodes have key range $[k, k]$, and interval list $R_{\sigma_0}(k)$.
4. A parent with children interval lists ν_l, ν_r has a merged and compacted list of ν_l and ν_r.

R can be evaluated on $[a, b]$ by querying the tree recursively, as per Algorithm 2. Alternatively, implementations can merge references from all lists using a priority queue for a k-way merge.

Algorithm 2 Interval Merge Tree Lookup

```
procedure IMT-Lookup(T, [a, b])
    [a_T, b_T] = [T.start, T.end]
    if a = a_T and b = b_T then
        return T.interval_list
    end if
    m ← ⌊(a_T + b_T)/2⌋
    if b ≤ m then
        return IMT-Lookup(T.left, [a, b])
    end if
    if a ≥ m + 1 then
        return IMT-Lookup(T.right, [a, b])
    end if
    ν_l ← IMT-Lookup(T.left, [a, m])
    ν_r ← IMT-Lookup(T.right, [m + 1, b])
    return Merge-And-Compact(ν_l, ν_r)
end procedure
```

2.6. The Permutation

The permutation Π in $\mathrm{GE}(G, \Pi)$ is used to generate a string family A_i where each A_i follows each σ_1 tied to vertex i according to Equation 1. This permutation dictates the order of σ_1s in $\mathcal{B}(\mathrm{GE}(G, \Pi))$; it allows to permute σ_1s independent of the encoding and, possibly, to make suffix array ranges of walks that share a prefix consecutive, which increases the efficiency of querying. Π can be enforced by selecting a unique alphabet Σ_Π, distinct from $\Sigma \cup \{\sigma_0, \sigma_1\}$, generating $N = |V|$ strings of length $\lceil \log_{|\Sigma_\Pi|}(N) \rceil$, and arranging them lexicographically. Denote these sorted strings as $X_1, ..., X_N$. Given any σ_1, appending an X_i to it forces its rank in $\mathcal{B}(\mathrm{GE}(G, \Pi))$ to be i. Hence, setting $X_{\Pi^{-1}(i)} = A_i$ ensures that the σ_1 with rank i in $\mathrm{GE}(G, \Pi)$ has rank $\Pi(i)$ in $\mathcal{B}(\mathrm{GE}(G, \Pi))$. Generally, using any sorted set of $|\Sigma_\Pi|$-ary uniquely decodable codes for X_i achieves the same result with reduced overhead.

One can choose the permutation Π so that ranges of σ_1s corresponding to the starting vertices of walks with a shared prefix are consecutive in the suffix array; that will result in faster query times. However, determining an optimally consecutive permutation is an NP-complete problem. Define

$$\mathcal{V}_Q = \{V_{i_0} | \exists W = V_{i_0} \to ... \in \mathcal{W} \wedge S_W[: |Q|] = Q\} \quad (5)$$

as the root of walks containing Q. To minimize interval counts returned by R for encountered ranges of σ_0s during a query Q, define a constraint set C_Q for a query as

$$C_Q = \bigcup_{V_i \in \mathcal{V}_Q} \bigcup_{j \in \mathcal{N}^-(i)} j \quad (6)$$

Choosing Π for all possible Q over all C_Qs is equivalent to solving the Consecutive-Block-Minimization problem on a binary matrix B of size $\Sigma^{|Q|} \times |V|$ where each row corresponds to a query string Q, and for every Q_i at row i, the bit $B[i][j]$ is set for all $j \in C_{Q_i}$. That yields an optimal Π, at the price of solving an NP-Complete but 1.5-approximable problem (34).

2.7. Querying and Construction Algorithms

This section provides two algorithms to query and construct GIN-TONIC, based on the definitions and observations provided and discussed in Section 2.3.

Algorithm 3 defines the construction of an GIN-TONIC from a string graph G, a permutation Π, and its associated X_i. The procedure initially generates the graph encoding, calculates its suffix array, and sorts the sub-array of suffix rank-to-offset mappings for σ_0s to derive the $r_{\sigma_0}, r_{\sigma_1}$. It then constructs an FM-Index using the suffix array. The overall computational complexity is $O((|V| + |E|) \log |V| + \sum_i |S_i|)$.

Algorithm 3 GIN-TONIC Construction

```
procedure GIN-TONIC-Construct(G(V, E, S = {S_1, ..., S_N}), Π, Σ_Π)
    {X_1, ..., X_N} ← Generate-Codewords(|V|, Σ_Π)
    GE(G, Π) ← ""
    for i ← 1 until |V| do
        String-Append(GE(G, Π), σ_0)
        String-Append(GE(G, Π), S_i)
        String-Append(GE(G, Π), σ_1)
        String-Append(GE(G, Π), X_{Π^{-1}(i)})
    end for
    SA_{GE(G,Π)} ← Construct-Suffix-Array(GE(G, Π))
    r_{σ_0}^{-1} ← Sort-By-Argument({SA_{GE(G,Π)}(1, ..., |V|)})
    r_{σ_0} ← Invert-Permutation(r_{σ_0}^{-1})
    r_{σ_1} ← Π
    R_{σ_0} ← { }
    for i ← 1 until |V| do
        R_{σ_0}(i) ← ⋃_{k∈N^-(r_{σ_0}(i))} r_{σ_1}(k)
    end for
    R ← IMT-Construct(R_{σ_0})
    I_FMI = (F, B(GE(G, Π))) ← Build-FM-Index(GE(G, Π))
    return (I_FMI, R, r_{σ_0})
end procedure
```

Algorithm 4 implements Locate queries, and returning S at line 27 instead of the decoded SA implements Find queries. Initially, the algorithm matches a query character to the graph encoding by updating the suffix array range based on the last character of the query over the full LF-mapping of $\mathrm{GE}(G, \Pi)$ in lines $2 - 4$. This range then becomes the initial range to be tracked. Subsequently, the algorithm undergoes a loop, executing the ensuing steps for $|Q| - 1$ iterations:

1. Forking Phase (lines $6 - 16$): For each tracked range, the algorithm assesses if the character σ_0 is a preceding character in the LF-mapping of $\mathrm{GE}(G, \Pi)$. If so, then some walks must contain the ongoing partial match as a prefix (verified in lines $8 - 9$). The algorithm then fetches the ranges of incoming neighbors using the range translator R. Each range from R is termed a "fork", and such forks are collected in a separate set F (line 12).
2. Compaction Phase (line 16): The forks from R represent suffix array ranges over σ_1. Although many forks might be retrieved, they can be compacted into fewer intervals. This phase determines the union of these intervals and simplifies their representation using the subroutine Compact-Intervals. Assuming R returns sorted ranges, this operation is linear in the number of intervals.

Algorithm 4 GIN-TONIC Lookup

1: **procedure** GIN-TONIC-LOOKUP$(Q, (\mathrm{I_{FMI}}, R, r_{\sigma_0}))$
2: $[d_a, d_b) \leftarrow$ ADVANCE-RANGE$([0, |\mathrm{GE}(G, \Pi)|), Q[|Q| - 1], \mathrm{I_{FMI}})$
3: $S \leftarrow \{[d_a, d_b)\}$
4: $t \leftarrow |Q| - 2$
5: **while** $t \geq 0$ and $|S| > 0$ **do**
6: $F \leftarrow \{\ \}$
7: **for** $[d_a, d_b) \in S$ **do**
8: $[v_a, v_b) \leftarrow$ ADVANCE-RANGE$([d_a, d_b), \sigma_0, \mathrm{I_{FMI}})$
9: **if** $v_b > v_a$ **then**
10: $I_{List} \leftarrow R([v_a, v_b - 1])$
11: **for** $[v_s, v_e]$ in I_{List} **do**
12: $F \leftarrow F \cup [v_s, v_e + 1)$
13: **end for**
14: **end if**
15: **end for**
16: $F \leftarrow$ COMPACT-INTERVALS(F)
17: $S^{'} \leftarrow \{\ \}$
18: **for** $[d_a, d_b) \in S \cup F$ **do**
19: $[n_a, n_b) \leftarrow$ ADVANCE-RANGE$([d_a, d_b), Q[t], \mathrm{I_{FMI}})$
20: **if** $n_b > n_a$ **then**
21: $S^{'} \leftarrow S^{'} \cup [n_a, n_b)$
22: **end if**
23: **end for**
24: $S \leftarrow S^{'}$
25: $t \leftarrow t - 1$
26: **end while**
27: **return** SUFFIX-ARRAY-DECODE$(S, (\mathrm{I_{FMI}}, r_{\sigma_0}))$
28: **end procedure**

3. Advance Phase (lines $17 - 25$): For each tracked range and fork, the algorithm advances to the next query character through the ADVANCE-RANGE procedure on the FM-Index. A separate set $S^{'}$ filters out ranges without the next character's occurrence in the LF-Mapping. The algorithm then updates its tracked ranges to $S^{'}$ and decrements the counter t, which indicates the next character position in Q to be considered.

After loop termination, S contains the suffix array ranges that represent the starting points of walks inducing Q. These results are converted to the text domain using SUFFIX-ARRAY-LOOKUP. The algorithm's time complexity is determined by the evaluation frequency of R, ADVANCE-RANGE, and COMPACT-INTERVALS, and the range count returned by R. It can be demonstrated that at iteration t, the algorithm holds at most $(t - 1)\lceil |V|/2 \rceil$ intervals in the worst case. This is because COMPACT-INTERVALS never returns more than $\lceil |V|/2 \rceil$ intervals by the pigeonhole principle. This leads to a worst-case time complexity of $O(|Q|^2|V|^2 \log |V| + k)$, where k is the number of walk roots from which the query can be reconstructed. However, if Π is optimal, producing a single run in B for every prefix, then COMPACT-INTERVALS outputs the fewest possible intervals. This limits the intervals in S at iteration t to t. Consequently, the time complexity is reduced to $O(|Q|^2|V| \log |V| + k)$, as R is now called only t times rather than $(t-1)\lceil |V|/2 \rceil$. However, this bound is pessimistic unless GE is adversarially constructed in order to maximise the number of intervals returned by R. Typically, the time complexity depends on the number of occurrences in the graph of walk roots corresponding to the query.

2.8. The Pre-computed Suffix Array Range Cache

In general, the initial iterations of a query yield disjoint suffix array ranges returned through R, most of which are subsequently discarded during the algorithm's advance phase, leading to unnecessary computation. A suffix array cache $\mathcal{C}$ with depth d is defined as a function $\mathcal{C} : \Sigma^{\leq d} \rightarrow 2^{\mathbb{I}}$ which takes a string argument Q with length at most d and returns the suffix array ranges containing walks inducing Q. By looking up $\mathcal{C}$ and initializing S at line 3 of Algorithm 4, then iterating only $t - d$ times, we can significantly cut down redundant computations from earlier iterations, albeit with increased storage demands. While one could represent $\mathcal{C}$ with a hash table, its static nature allows for a compressed FM-Index implementation. Given unique string keys $S_1, ..., S_K$ and their related suffix array interval lists $I_1, ..., I_K$, we can define the cache encoding as $\mathcal{C}\mathrm{E}(G, \Pi) = (\oplus_{i=1}^{K} \sigma S_i)\sigma\epsilon$, where $\sigma \notin \Sigma$ is a unique marker. In $\mathcal{C}$E, the rank of σ matches the string key index. The interval lists are indexed using an FM-Index over $\mathcal{C}$E, and the lists are permuted as $I_{\Pi_{\mathrm{SA}(1)}}, ..., I_{\Pi_{\mathrm{SA}(K)}}$, with $\Pi_{\mathrm{SA}(i)}$ indicating the permutation of σs in $\mathcal{B}(\mathcal{C}\mathrm{E})$. To look up this index for a string Q, one matches $\sigma Q \sigma$ against the FM-Index and navigates to the interval list $I_{\Pi_{\mathrm{SA}(r)}}$, where r is the rank of σ after matching $\sigma Q \sigma$. Due to its structure, the FM-Index will have at most one match for $\sigma Q \sigma$. $\mathcal{C}$ enhances query efficiency considerably.

3. Experiments and Results

3.1. Benchmark Setup

Performance of the proposed algorithms was assessed on two use cases. The first one involves a human pangenome graph, constructed from 20 haplotype-collapsed assemblies as described in (13), with 148,618 vertices, 214,995 edges, and a total label length of 3.14×10^9 base pairs. The second use case considers the splicing graph of a human transcriptome with 1,029,466 vertices, 1,523,321 edges, and a total label length of 6.5×10^9 base pairs. This was generated by overlaying the annotations of transcripts from GENCODE Release 40 (35) onto the human reference genome `GRCh38.p13`, with forward and reverse strands considered separately in the same file. Additional statistics for the two graphs are presented in Table 1. Experiments were conducted utilising a single thread on a machine with an AMD Ryzen Threadripper 3990X running at 2.2 GHz, 256 GB DDR4 RAM clocked at 2.7 GHz, and a 1 TB SSD with maximum read/write speeds of 7.0/5.0 GB/s.

For each input item, optimal permutations Π over the suffix array as described in Section 2.6 were approximated for all walk prefixes of length 12 through simulated annealing; GIN-TONICs were then generated with rank and suffix array sampling periods of 32. Construction times for all implementations including the `SDSL`-based ones, and resulting index sizes, are listed in Table 2. They are comparable to those of a linear FM-Index, as the length of GE is approximately equal to the length of the human genome. To evaluate querying and decoding efficiency, 65,536 adversarial test queries maximising the number of spanned vertices were sampled from the input file for each one of lengths $2^4, ..., 2^{12}$. In addition, caches for each index with depths ranging from 1 to 12 were built as described in Section 2.8 and summarised in Table 3. Then, both our native FM-Index implementation and two different implementations based on the `sdsl` (36) (Huffman-shaped wavelet-trees with RRR bitvectors (11) and with hybrid bitvectors (37)) were benchmarked. Detailed logs, along with

I. Input String Graph G

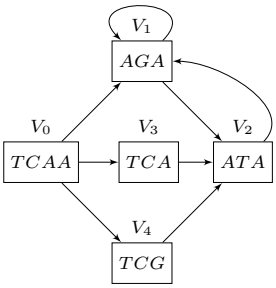

II. C_Q of G for A,AT,AG

Prefix (Q)	$\mathcal{V}_Q$ (Walk roots)	C_Q (Constraint sets)
A	$\{V_1, V_2\}$	$\{V_0, V_1, V_2, V_3, V_4\}$
AT	$\{V_2\}$	$\{V_1, V_3, V_4\}$
AG	$\{V_1\}$	$\{V_0, V_1, V_2\}$

III. Optimal Π to C_Q and codeword assignment

Permutation	V_2	V_0	V_1	V_3	V_4
Codewords	000	001	010	011	100

IV. Single range mapper R_{σ_0} based on r_{σ_0}

i/σ_0	$r_{\sigma_0}(i)$	$\mathcal{N}^-(r_{\sigma_0}(i))$	R_{σ_0}
0	1	0,1,2	[0,2]
1	2	1,3,4	[2,4]
2	3	0	[1,1]
3	0	-	-
4	4	0	[1,1]

V. LF-Mapping of GE(G, Π)

Text	(TCAA)000(AGA)001(ATA)010(TCA)011(TCG)100$
F	$(((((()))))000000000011111AAAAAAACCCGGTTTT
L	0100$1AAAAG01010))0))010)0TAGCC((TTTCAA(((

VI. Interval-Merge Tree (R)

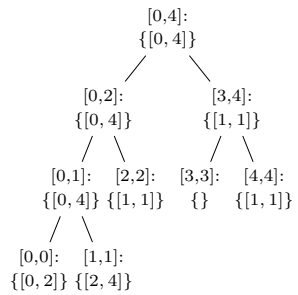

VII. Tracing the Query $Q = AAT$

$$t = 1 : S = \left\{[38, 42)\right\} \xrightarrow[R([2,4]=\{[1,1]\}]{\text{Fork \& Compact}} F = \left\{[7, 8)\right\}, S \cup F = \left\{\begin{matrix}[7, 8), \\ [38, 42)\end{matrix}\right\} \xrightarrow{\text{Advance On } Q[1]} S' = \left\{\begin{matrix}[27, 28) \\ [32, 33)\end{matrix}\right\}$$

$$t = 0 : S = \left\{\begin{matrix}[27, 28) \\ [32, 33)\end{matrix}\right\} \xrightarrow[R([1,1]=\{[2,4]\}]{\text{Fork \& Compact}} F = \left\{[8, 11)\right\}, S \cup F = \left\{\begin{matrix}[8, 11) \\ [27, 28) \\ [32, 33)\end{matrix}\right\} \xrightarrow{\text{Advance On } Q[0]} S' = \left\{\begin{matrix}[28, 30) \\ [30, 31)\end{matrix}\right\}$$

$$t = -1 : S = \left\{\begin{matrix}[28, 30) \\ [30, 31)\end{matrix}\right\} \xrightarrow{\text{Suffix Array Lookup}} \text{Text-Locations} = \left\{\begin{matrix}3 \\ 12 \\ 28\end{matrix}\right\} \xrightarrow{\text{Vertex, Offset}} \text{Graph-Locations} = \left\{\begin{matrix}(V_0, 2) \\ (V_1, 2) \\ (V_3, 2)\end{matrix}\right\}$$

Figure 2. Illustrated examples of how to build and query a GIN-TONIC. **I.** A string graph of five vertices and 8 edges. **II.** Identified constraint sets for three prefixes A, AT, AG. **III.** Codeword assignment to enforce a permutation preserving a consecutive order of the constraint sets in II. **IV.** The single-vertex range translator over σ_0. **V.** LF-Mapping constructed on the graph encoding with the permutation obtained in Step III. **VI.** Interval-merge tree based on the single range mapper R_{σ_0}. **VII.** Matching $Q = AAT$ using the data structures in V and VI. The query is successively extended one character at a time starting from its end to the beginning as in the linear FM-Index.

Input Name	Pangenome	Transcriptome
Size (MB)	2,996.456	6,264.277
|V|	148,618	1,029,466
|E|	214,995	1,523,321
Avg Label Length (bp)	21,100	6,350
Med Label Length (bp)	265	161
Std Label Length (bp)	156,000	89,600
Min Label Length (bp)	1	1
Max Label Length (bp)	30,092,626	30,380,454
Avg Indegree	1.45	1.48
Med Indegree	1	1
Std Indegree	0.692	0.937
Min Indegree	1	1
Max Indegree	11	93
Avg Outdegree	1.45	1.48
Med Outdegree	1	1
Std Outdegree	0.689	0.873
Min Outdegree	1	1
Max Outdegree	8	71

Table 1. Statistics for input items.

Index Type/ Name	Pangenome		Transcriptome	
	Size (MB)	Time (s)	Size (MB)	Time
(native) **16**	12,800	649	26,700	1,760
(native) **32**	7,360	612	15,400	1,600
(native) **64**	4,640	570	9,720	1,570
(`sdsl`) **Hybrid**	1,336	747	2,839	1,932
(`sdsl`) **RRR**	1,278	777	2,716	2,012

Table 2. Index construction times, and sizes. (native) refers to our implementation, and (`sdsl`) to a compressed implementation using Huffman-shaped wavelet-trees on top of a particular bit-vector.

Cache Depth	Pangenome Size (MB)	Transcriptome Size (MB)
1	0.00	0.00
2	1.30	8.62
3	5.25	34.7
4	12.4	83.2
5	23.0	157
6	37.5	259
7	56.1	388
8	80.8	545
9	120	736
10	209	998
11	498	1,480
12	1,600	2,800

Table 3. Cache sizes as a function of depth for both input items.

the relevant scripts used for data collection, are available at `https://github.com/uensalo/gin/tree/master/benchmark`.

3.2. Effective Query Length

While the FM-Index traverses the LF-mapping exactly as many times as the length of the query Q, Algorithm 4 implies additional traversals every time the query needs to progress through the edges of the graph. This notion is captured by defining the *effective query length* $|Q|'$ as the number of LF-mappings done before the algorithm terminates, i.e., as the number of invocations of Advance-Range on line 20 of Algorithm 4. To quantify the overhead against the FM-Index, we also define the *relative*

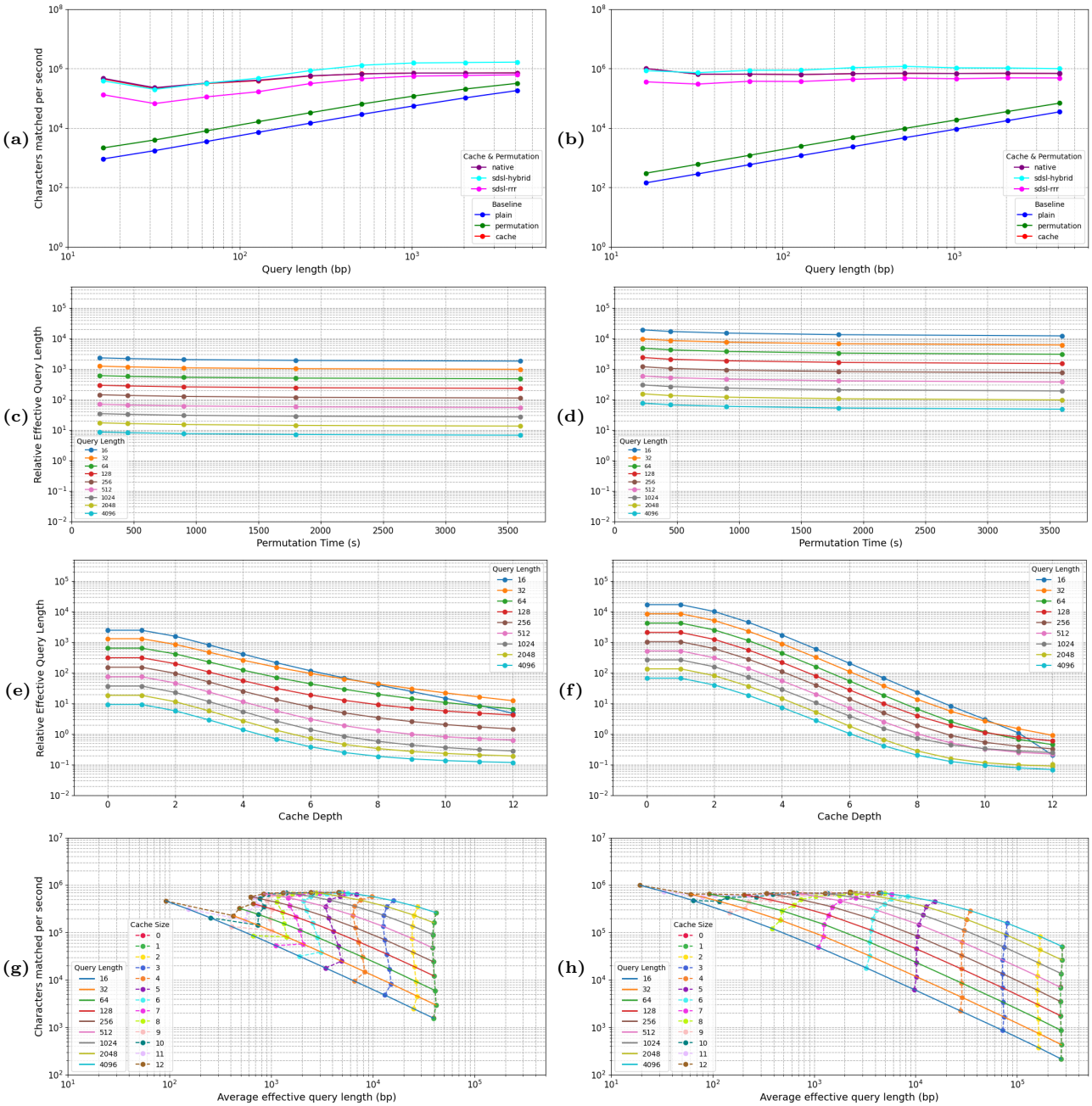

Figure 3. Benchmarking GIN-TONIC on adversarial queries. Left panels are for the pangenome, right panels for the transcriptome. Panels **(a,b)** show baseline performance using neither cache nor permutation, only permutation, only cache; and performance of different GIN-TONIC implementations (native and `sdsl`-based) using both cache and permutation as characters matched per second. Panels **(c,d)** show average $\Delta(Q)$ as a function of permutation optimization times. Panels **(e,f)** show average $\Delta(Q)$ as a function of cache depth. Caches of depth 0 and 1 have very similar performances close to the baseline since they cannot traverse more than one vertex, and hence they appear superimposed in the plots. Panels **(g,h)** show $\Delta(Q)$ vs. characters matched per second, grouped by cache depth (dashed lines) and average effective query length (solid lines).

effective query length as

$$\Delta(Q) \triangleq \frac{|Q|' - |Q|}{|Q|} \tag{7}$$

$\Delta(Q)$ will be 1 for a linear genome and > 1 for a graph genome, its precise value being fundamentally determined by the structure and complexity of the graph. Notably, $\Delta(Q)$ is a pure factor independent of the actual FM-Index used by GIN-TONIC, and hence it is the same across all the implementations tested while benchmarking GIN-TONIC. However, $\Delta(Q)$ can be decreased by optimizing the permutation Π and/or increasing the cache depth d, which are explored in the following sections.

3.3. Baseline Benchmarks

The main results of benchmarking GIN-TONIC's baseline performance across different configurations (without optimisations; with optimised permutation; with cache; with both optimised permutation and cache) are shown in Figures 3a and

Dataset	Pangenome			Transcriptome		
Query Length	Find (s)	Decode (s)	#	Find (s)	Decode (s)	#
16	2.3	27	33,858,913	1.1	17	19,483,058
32	8.2	2.6	3,054,580	3.2	0.63	635,127
64	12	0.44	256,545	6.2	0.19	68,855
128	19	0.28	99,662	13	0.19	66,082
256	27	0.25	78,184	24	0.18	65,562
512	47	0.22	75,429	47	0.18	65,537
1,024	92	0.25	75,517	94	0.23	65,537
2,048	180	0.28	75,517	180	0.24	65,536
4,096	350	0.33	75,517	350	0.29	65,536

Table 4. Total time taken in seconds for FIND queries and walk root decodes, and total walk root counts (#) for 65,536 adversarial queries over the input items.

3b. Data for the cache & permutation case is reported for 3 different FM-Index implementations (native, `sdsl` with RRR bitvectors and `sdsl` with hybrid bitvectors).

Caches significantly outperform permutations in enhancing GIN-TONIC's speed. An optimized permutation roughly doubled the effective query length and query throughput, whereas a cache led to several orders of magnitude of improvement (3 to 4 for short queries). However, using a permutation in addition to the cache can sometimes increase performance further; even though the transcriptome saw negligible gains, the pangenome showed around a 10% improvement for shorter queries.

In addition, the use of a cache effectively compensates for the complexity injected into the FM-Index by the graph structure. While without cache the number of characters matched per second by GIN-TONIC is not constant, unlike what happens with the FM-Index, that is not the case when a cache is used.

As for the effects of the implementation, the best performance is obtained from `sdsl` with hybrid bitvectors and the worst from `sdsl` with RRR bitvectors; while the behaviour of our native implementation is intermediate, being as fast as `sdsl`-hybrid at short query lengths and as slow as `sdsl`-RRR at longer queries. GIN-TONIC based on `sdsl`-hybrid reaches $\sim 10^6$ characters matched per second, which is comparable with what is achieved by an FM-Index on linear text.

3.4. Effect of Permutation

Figures 3c and 3d show the relation between the time spent optimising the permutation and the relative effective query length $\Delta(Q)$, which measures the slowdown introduced by the topology of the graph with respect to the linear FM-Index. No cache was used here, as the speed-ups provided by the two mechanisms are not independent. While the permutation can make the index more efficient, its influence is relatively modest with respect to that of the cache. It's also worth noting that even though optimising the permutation does improve querying efficiency, it also incurs a one-off time cost at indexing time. In our case, we optimised the permutation for an hour at most, which is comparable to the time to build the FM-Index itself.

3.5. Effect of the Cache

Using a fixed permutation, cache depths from 1 to 12 were tested with rank and suffix array sampling rates set to 32; the results are illustrated in Figures 3e and 3f. They show that for both input graphs and for any given cache depth, $\Delta(Q)$ decreases as the query length increases; i.e., the longer the query, the closer the performance of GIN-TONIC was to that an FM-Index, and the more irrelevant the graph structure was. That can only happen if the number of jumps considered for longer queries decreases with the query length. We also observed that increasing the cache depth for a fixed query yielded several orders of magnitude of decrease in $\Delta(Q)$ for both input graphs, which indicates that a deeper cache is more able to optimise away the additional computation caused by the graph topology with respect to a linear FM-Index. Caches of order 10-12 make the values of $\Delta(Q)$ sufficiently close to 0 for GIN-TONIC to be practically usable.

3.6. Effect of Graph Structure

Strikingly, our benchmarks shine a light on the fundamental structural properties underlying the different graphs, as they directly determine the querying slowdown measured by $\Delta(Q)$.

Considering the actual performance of GIN-TONIC without a cache, one would expect the characters matched per second to be essentially independent of the query length starting from some query length on. After matching the first characters in the query, extending the query becomes cheap, thus rendering the work needed to match the rest of the query negligible. Hence, the expected curve showing $\Delta(Q)$ vs. characters matched per second of GIN-TONIC without a cache over queries of increasing lengths is vertical. That can indeed be observed for both input graphs in Figures 3g and 3h. Note that points associated with caches of depth 0 and 1 coincide as they offer very similar, negligible improvements over the baseline.

For both the pangenome and transcriptome, increasing cache depth resulted in the transformation from a vertical curve, meaning that $\Delta(Q)$ was independent of the query length, to a horizontal curve, which means that the high cost for extending the first few characters in the query is eliminated by the cache, and the cost of extending the query by one character tends to become independent of the query length. Above certain cache depths, the number of characters matched per second starts to stabilize, implying that other operations of the algorithm have become bottleneck.

However, there are differences between the pangenome and the transcriptome, as increasing the cache depth yields a flat curve for the transcriptome but not for the pangenome. This difference can be attributed to local graph structure. Vertices with shorter labels, high indegree and outdegree have the greatest potential to increase $\Delta(Q)$, as they will trigger more vertex traversals while extending the query. On the contrary, having a cache pre-computes the extensions of the query, and in the case where the label of a vertex is shorter than the depth of the cache, no additional computation arising from the topology of the graph is needed to extend the query.

This is confirmed experimentally by the local structure of the pangenome and the transcriptome. Figure 4 shows the distribution of vertex label length vs. vertex degree for each graph, and one can see that the distribution of vertex lengths in the pangenome is skewed towards longer lengths when compared to that for the transcriptome. In particular, a significant number of vertices of length $\sim$300 is present, which is probably an artefact pangenome construction; that is the likely reason why a flat curve is not achieved by a cache of depth 12. On the other hand, the vertex length distribution for the transcriptome is smooth and centered on much smaller values, which likely explains the effectiveness of the cache at decreasing $\Delta(Q)$.

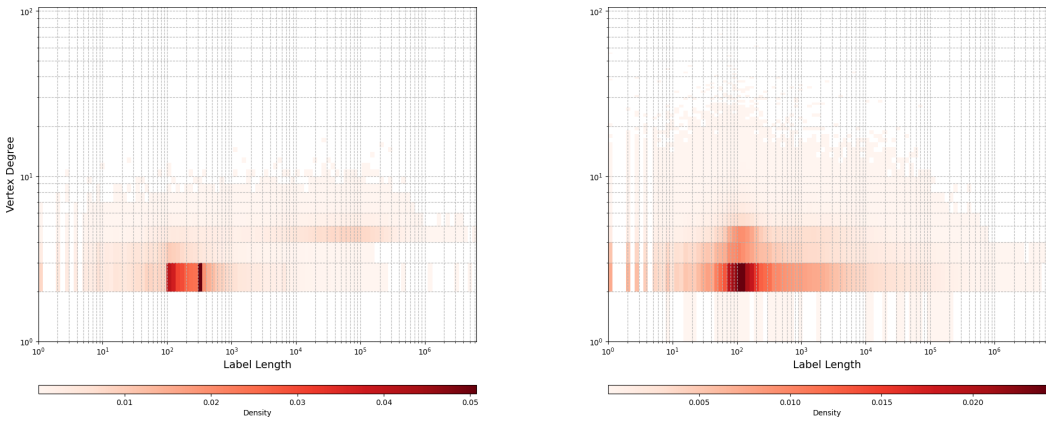

Figure 4. Vertex label lengths vs. degrees for each vertex for pangenome and transcriptome.

3.7. **Locate** and **Walk** Queries

Practical use of the index requires decoding suffix array ranges of matches Q into offsets of $\mathrm{GE}(G, \Pi)$. This decoding is independent of the internal details of Find queries, thus allowing query matching and suffix array range decoding into walk roots to be performed independently. In such a setting, the limiting factor in speed will be the slower of the two tasks.

Table 4 displays times spent performing Find queries of varying lengths and decoding the resulting suffix array ranges with the native implementation. For both inputs decoding was faster than Find for queries longer than 16 bp, thus making Find the bottleneck. However, for shorter queries, given the higher number of matches returned, decoding was slower.

After decoding suffix array ranges, the offsets in $\mathrm{GE}(G, \Pi)$ are not yet in the format (V_i, o_i). By using a prefix-summed array of the offsets at which vertices start in $\mathrm{GE}(G, \Pi)$, index and offset of the vertex can be found efficiently in $O(\log V)$ time via binary search. This operation is fast in practice and does not significantly affect decoding performance.

Walk queries cannot be answered via Algorithm 4; instead, a localised graph search can be used for each matching root (V_i, o_i) of Q, to reconstruct walks in the format $(o_{W_1}, o_{W_K}) : V_{W_1}, ..., V_{W_K}$, with offset o_{W_0} denoting the start of the match in V_{W_1} and offset o_{W_K} the end of the match in V_{W_K}. Graph labels can be bit-encoded to support Walk queries efficiently. This adds to the flexibility of GIN-TONIC, while also allowing the integration of other indexing strategies (e.g. haplotype indexing) to optimize the search space of walks.

4. Conclusions and Outlook

In this paper we have introduced GIN-TONIC, a monolithic data structure able to index arbitrary string graphs non-hierarchically. In terms of construction times, memory usage and querying and decoding times, its performance approaches that of an FM-Index over linear text, as demonstrated by experimental measurements of $\Delta(Q)$ on datasets of the size of a human pangenome and transcriptome. To the best of our knowledge, this work is the first one to achieve such a result.

The experimental performance reported in the paper could be improved further in several ways – for instance, by parallelising or pipelining several stages of the current implementation of GIN-TONIC, or by replacing its underlying FM-Index implementation with a hardware-optimised one. In addition, the representation of the string graph could be easily converted into a compressed and queryable file format and/or integrated into alignment software, possibly in conjunction with other haplotype indexing tools such as GBWT(20; 21). Future work will also explore how more flexible querying strategies taking into account biological priors could be integrated into GIN-TONIC.

Contributions

Ünsal Öztürk: Conceptualisation, data curation, formal analysis, investigation, methodology, software, validation, visualisation, original draft, review, editing.
Marco Mattavelli: Conceptualisation, funding acquisition, project administration, resources, supervision, review, editing.
Paolo Ribeca: Conceptualistion, data curation, investigation, methodology, project administration, resources, software, supervision, validation, review, editing.

Acknowledgements

Paolo Ribeca is affiliated to the National Institute for Health Research Health Protection Research Unit (NIHR HPRU) in Genomics and Enabling Data at University of Warwick in partnership with the UK Health Security Agency (UKHSA), in collaboration with University of Cambridge and Oxford. Paolo Ribeca is based at UKHSA. The views expressed are those of the authors and not necessarily those of the NIHR, the Department of Health and Social Care or UKHSA. A preliminary version of this work was presented in (38) as a poster.

Data Availability

Instructions and all mentioned input data compatible with GIN-TONIC (39) are available freely on `https://github.com/uensalo/gin-data`. Files used to construct the transcriptome are available at `https://www.gencodegenes.org/human/release_40.html` (35). The human pangenome (GRCh38-20-0.10b) is available via (13).

References

1. Paten, B., Novak, A. M., Eizenga, J. M. and Garrison, E. Genome graphs and the evolution of genome inference. *Genome Res.*, 27(5):665–676, May 2017.

2. Liao, W.-W. et al. A draft human pangenome reference. *Nature*, 617(7960):312–324, May 2023.
3. Wang, T. et al. The Human Pangenome Project: a global resource to map genomic diversity. *Nature*, 604(7906):437–446, 2022.
4. The Human Pangenome Reference Consortium. Pangenome graph construction from genome alignments with Minigraph-Cactus. *Nature Biotechnology*, 2023.
5. Liu, B. et al. deSALT: fast and accurate long transcriptomic read alignment with de Bruijn graph-based index. *Genome Biology*, 20(1):274, Dec 2019.
6. Ferragina, P. and Manzini, G. Opportunistic data structures with applications. In *Proceedings 41st Annual Symposium on Foundations of Computer Science*, pages 390–398, 2000.
7. Langmead, B. and Salzberg, S. Fast gapped-read alignment with Bowtie 2. *Nat. Methods*, 9(4):357–359, 2012.
8. Li, H. and Durbin, R. Fast and accurate short read alignment with Burrows–Wheeler transform. *Bioinformatics*, 25(14):1754–1760, 2009.
9. Marco-Sola, S., Sammeth, M., Guigó, R. and Ribeca, P. The GEM mapper: fast, accurate and versatile alignment by filtration. *Nature Methods*, 9(12):1185–1188, 2012.
10. Navarro, G. Wavelet trees for all. *Journal of Discrete Algorithms*, 25:2–20, 2014. 23rd Annual Symposium on Combinatorial Pattern Matching.
11. Raman, R., Raman, V. and Rao, S. S. Succinct Indexable Dictionaries with Applications to Encoding K-Ary Trees and Multisets. In *Proceedings of the Thirteenth Annual ACM-SIAM Symposium on Discrete Algorithms*, SODA '02, page 233–242, 2002.
12. Sahlin, K., Baudeau, T., Cazaux, B. and Marchet, C. A survey of mapping algorithms in the long-reads era. *Genome Biology*, 24(1):133, Jun 2023.
13. Li, H., Feng, X. and Chu, C. The design and construction of reference pangenome graphs with minigraph. *Genome Biology*, 21(1):265, Oct 2020.
14. Rakocevic, G. et al. Fast and accurate genomic analyses using genome graphs. *Nat. Genetics*, 51(2):354–362, 2019.
15. Gibney, D. and Thankachan, S. V. On the Hardness and Inapproximability of Recognizing Wheeler Graphs. *27th Annual European Symposium on Algorithms (ESA) 2019*.
16. Gibney, D. and Thankachan, S. V. On the Complexity of Recognizing Wheeler Graphs. *Algorithmica*, 84(3):784–814, 2022.
17. Hickey, G. et al. Genotyping structural variants in pangenome graphs using the vg toolkit. *Genome Biology*, 21(1):35, Feb 2020.
18. Burrows, M. and Wheeler, D. J. A Block-sorting Lossless Data Compression Algorithm. 1994.
19. Durbin, R. Efficient haplotype matching and storage using the positional Burrows-Wheeler transform (PBWT). *Bioinformatics*, 30(9):1266–1272, May 2014.
20. Novak, A. M., Garrison, E. and Paten, B. A graph extension of the positional Burrows-Wheeler transform and its applications. *Algorithms Mol. Biol.*, 12:18, July 2017.
21. Sirén, J., Garrison, E., Novak, A. M., Paten, B. and Durbin, R. Haplotype-aware graph indexes. *Bioinformatics*, 36(2):400–407, 07 2019.
22. Sirén, J. et al. Pangenomics enables genotyping of known structural variants in 5202 diverse genomes. *Science*, 374(6574):abg8871, Dec 2021.
23. Kim, D., Paggi, J. M., Park, C., Bennett, C. and Salzberg, S. L. Graph-based genome alignment and genotyping with HISAT2 and HISAT-genotype. *Nature Biotechnology*, 37(8):907–915, Aug 2019.
24. Zhang, Y., Park, C., Bennett, C., Thornton, M. and Kim, D. Rapid and accurate alignment of nucleotide conversion sequencing reads with HISAT-3N. *Genome Research*, 31(7):1290–1295, 2021.
25. Gagie, T., Manzini, G. and Sirén, J. Wheeler graphs: A framework for BWT-based data structures. *Theoretical Computer Science*, 698:67–78, 2017.
26. Gagie, T. r-indexing Wheeler graphs. *CoRR*, abs/2101.12341, 2021.
27. Alanko, J., Gagie, T., Navarro, G. and Seelbach Benkner, L. Tunneling on Wheeler Graphs. In *2019 Data Compression Conference (DCC)*, pages 122–131, 2019.
28. Goga, A. and Baláž, A., Prefix-free parsing for building large tunnelled Wheeler graphs, 2022.
29. Nellore, A., Nguyen, A. and Thompson, R. F. An Invertible Transform for Efficient String Matching in Labeled Digraphs. In *Annual Symposium on Combinatorial Pattern Matching*, 2019.
30. Cotumaccio, N., D'Agostino, G., Policriti, A. and Prezza, N. Co-Lexicographically Ordering Automata and Regular Languages - Part i. *J. ACM*, jul 2023. Just Accepted.
31. Cotumaccio, N., D'Agostino, G., Policriti, A. and Prezza, N. Which Regular Languages can be Efficiently Indexed? *CoRR*, abs/2102.06798, 2021.
32. Cotumaccio, N. Graphs can be succinctly indexed for pattern matching in $o(|e|^2 + |v|^{5/2})$ time. *2022 Data Compression Conference (DCC)*, pages 272–281, 2022.
33. Chao, K.-H., Chen, P.-W., Seshia, S. A. and Langmead, B. WGT: Tools and algorithms for recognizing, visualizing and generating Wheeler graphs. *iScience*, page 107402, 2023.
34. Haddadi, S. and Layouni, Z. Consecutive block minimization is 1.5-approximable. *Information Processing Letters*, 108(3):132–135, 2008.
35. Frankish, A. et al. GENCODE 2021. *Nucleic Acids Research*, 49(D1):D916–D923, 12 2020.
36. Gog, S., Beller, T., Moffat, A. and Petri, M. From Theory to Practice: Plug and Play with Succinct Data Structures. In *13th International Symposium on Experimental Algorithms, (SEA 2014)*, pages 326–337, 2014.
37. Kärkkäinen, J., Kempa, D. and Puglisi, S. J. Hybrid Compression of Bitvectors for the FM-Index. In *2014 Data Compression Conference*, pages 302–311, 2014.
38. Ozturk, U., Ribeca, P. and Mattavelli, M. FM-Directories: Extending the Burrows-Wheeler Transform for String Labeled Vertex Graphs of (Almost) Arbitrary Topology. In *2023 Data Compression Conference*, page 355, 2023.
39. Ozturk, U. and Ribeca, P., uensalo/gin: GIN-TONICv1.0 - initial release, Computer software, November 2023, Publisher: Zenodo, DOI: 10.5281/zenodo.10069417, URL: https://doi.org/10.5281/zenodo.10069417, Version v1.0.