Lysine-Cysteine-Serine-Tryptophan Inserted into the DNA-Binding Domain of Human Mineralocorticoid Receptor Increases Transcriptional Activation by Aldosterone

Yoshinao Katsu[1,2,#] Jiawen Zhang[2,#], Michael E. Baker[3,4,] *

[1] Faculty of Science

Hokkaido University

Sapporo, Japan

[2] Graduate School of Life Science

Hokkaido University

Sapporo, Japan

[3] Division of Nephrology-Hypertension

Department of Medicine, 0693

University of California, San Diego

9500 Gilman Drive

La Jolla, CA 92093-0693

Center for Academic Research and Training in Anthropogeny (CARTA) [4]

University of California, San Diego

La Jolla, CA 92093

# Equal contribution

*Correspondence to

Y. Katsu; E-mail: ykatsu@sci.hokudai.ac.jp

M. E. Baker; E-mail: mbaker@health.ucsd.edu

Abstract

Due to alternative splicing in the DNA-binding domain (DBD) of the mineralocorticoid receptor (MR), humans contain two almost identical MR transcripts with either 984 amino acids (MR-984) or 988 amino acids (MR-988), in which their DBDs differ by only four amino acids, Lys,Cys,Ser,Trp (KCSW). Human MRs also contain mutations at two sites, codons 180 and 241, in the amino terminal domain (NTD). Together, there are five human MR genes in GenBank. Human MR-984, which was cloned in 1987, has been extensively studied. Human MR-988, cloned in 1995, contains KCSW in its DBD. Neither this human MR-988 nor the other human MR-988 genes have been studied for their response to aldosterone and other corticosteroids. Here, we report that transcriptional activation of human MR-988 by aldosterone is increased by about 50% compared to activation of human MR-984 in HEK293 cells transfected with the TAT3 promoter, while the half-maximal response (EC50) is similar for aldosterone activation of MR-984 and MR-988. The physiological responses in humans with MR genes containing KCSW and with differences in the NTD warrant investigation.

Key words: mineralocorticoid receptor, DNA-binding domain, Duplicated mineralocorticoid receptors, Aldosterone, Cortisol

Running title: Increased Corticosteroid Activation of the Human Mineralocorticoid Receptor containing KCSW in the DBD

1. Introduction.

The mineralocorticoid receptor (MR) is a ligand-activated transcription factor that belongs to the nuclear receptor family, which arose in multicellular animals along with other vertebrate steroid receptors: the glucocorticoid receptor (GR), progesterone receptor (PR), androgen receptor (AR) and estrogen receptor (ER) [1–6]. The classical function of the MR in humans and other terrestrial vertebrates is to maintain electrolyte balance by regulating sodium and potassium transport in epithelial cells in the kidney and colon [7–12]. In addition, the MR also has important physiological functions in many other tissues, including brain, heart, skin and lungs [11,13–22].

The human MR sequence reported in 1987 by Arriza et al [1] contains 984 amino acids (MR-984). Inspection of the MR sequence revealed that, like other steroid receptors, the human MR is composed of four modular functional domains: a large amino-terminal domain (NTD) of about 600 amino acids, followed in the center by a DNA-binding domain (DBD) of about 65 amino acids, followed by a small hinge domain of about 60 amino acids that connected to the ligand-binding domain of about 250 amino acids at the C-terminus, where aldosterone, cortisol and other corticosteroids bind to activate transcription [1,2,23–25].

Analysis of the human MR sequence by Arriza et al. [1] revealed that the MR was closely related to the glucocorticoid receptor (GR), which was consistent with evidence that some corticosteroids, such as cortisol, corticosterone and 11-deoxycorticosterone were ligands for both the MR and GR [13,15,21,24,26] and that aldosterone, cortisol, corticosterone and 11-deoxycorticosterone have similar binding affinity for human MR [1,21,26–28]. Activation of the MR by cortisol and corticosterone, two steroids that are ligands for the GR [28–30], is consistent with the evolution of the GR and MR from a common ancestral corticoid receptor (CR) in a cyclostome (jawless fish) that evolved about 550 million years ago at the base of the vertebrate line [24,31–37].

Knowledge about the human MR family expanded in 1995, when Bloem et al. [38] cloned a human MR with 988 amino acids (MR-988). This human MR had four additional amino acids in the DBD due to alternative splicing between exons 3 and 4 of an in-frame insertion of 12 bp encoding Lys, Cys, Ser, Trp (KCSW) [39,40] (Figure 1). As shown in Figure 1, the DBDs in terrestrial vertebrate MRs are highly conserved.

```
Human MR-984:          CLVCGDEASGCHYGVVTCGSCKVFFKRAVEG----QHNYLCAGRNDCIIDKIRRKNCPACRLQKCLQAGM
Human MR-988:          CLVCGDEASGCHYGVVTCGSCKVFFKRAVEG KCSWQHNYLCAGRNDCIIDKIRRKNCPACRLQKCLQAGM
Platypus MR-990:       CLVCGDEASGCHYGVVTCGSCKVFFKRAVEG----QHNYLCAGRNDCIIDKIRRKNCPACRLQKCLQAGM
Platypus MR-994:       CLVCGDEASGCHYGVVTCGSCKVFFKRAVEG KCSWQHNYLCAGRNDCIIDKIRRKNCPACRLQKCLQAGM
Turtle MR-993:         CLVCGDEASGCHYGVVTCGSCKVFFKRAVEG----QHNYLCAGRNDCIIDKIRRKNCPACRLQKCLQAGM
Turtle MR-997:         CLVCGDEASGCHYGVVTCGSCKVFFKRAVEG KCSWQHNYLCAGRNDCIIDKIRRKNCPACRLQKCLQAGM
Xenopus MR-979:        CLVCGDEASGCHYGVVTCGSCKVFFKRAVEG----QH SYLCAGRNDCIIDKIRRKNCPACRLQKCLQAGM
Xenopus MR-983:        CLVCGDEASGCHYGVVTCGSCKVFFKRAVEG KCSRQHSYLCAGRNDCIIDKIRRKNCPACRLQKCLQAGM
Lungfish MR-985:       CLVCGDEASGCHYGVVTCGSCKVFFKRAVEG----QHNYLCAGRNDCIIDKIRRKNCPACR VRKCLQAGM
Zebrafish MR-970:      CLVCGDEASGCHYGVVTCGSCKVFFKRAVEG----QHNYLCAGRNDCIIDKIRRKNCPACR VRKCLQAGM
Elephant shark MR-956:CLVC SDEASGCHYGVLTCGSCKVFFKRAVEG----QQNYLCAGRNDCIIDKIRRKNCPACRL RKCLKAGM
```

Figure 1. Comparison of the DNA-binding domains on human MR-984, human MR-988, platypus MR-990, platypus MR-994-, turtle MR-993, turtle MR-997, Xenopus MR-979, Xenopus MR-983, lungfish MR-985, zebrafish MR-970, elephant shark MR-956. The DBD of human MR-988 has an insertion of KCSW that is absent in human MR-984. Otherwise, the rest of the sequences of human MR-984 and human MR-988 are identical. A four amino acid insertion also is present at a corresponding position in the DBD of platypus MR turtle MR, and *Xenopus* MR. Moreover, except for the four amino acid insert in the DBD, the rest of the DBD sequences of human MR, platypus MR and turtle MR are identical. Differences between the DBD sequence in human MR and selected vertebrate MRs are shown in red. Protein accession numbers are XP_054206038 for human MR-984, XP_054206037 for human MR-988, XP_007669969 for platypus MR-990, XP_016083764 for platypus MR-994, XP_044874191 for turtle MR-993, XP_044874189 for turtle MR-997, NP_001084074 for Xenopus MR-979, XP_018098693 for *Xenopus* MR-983, BCV19931 for lungfish MR-985, NP_001093873 for zebrafish MR-970 and XP_007902220 for elephant shark MR-956.

Thus, humans were found to contain two almost identical MR transcripts, in which their DBDs differ by only four amino acids. The number of distinct human MR genes expanded after a BLAST analysis of GenBank with the human MR sequence identified differences at codons 180 and 241 in the NTD of MR-984 and MR-988 in humans [41] (Figure 2).

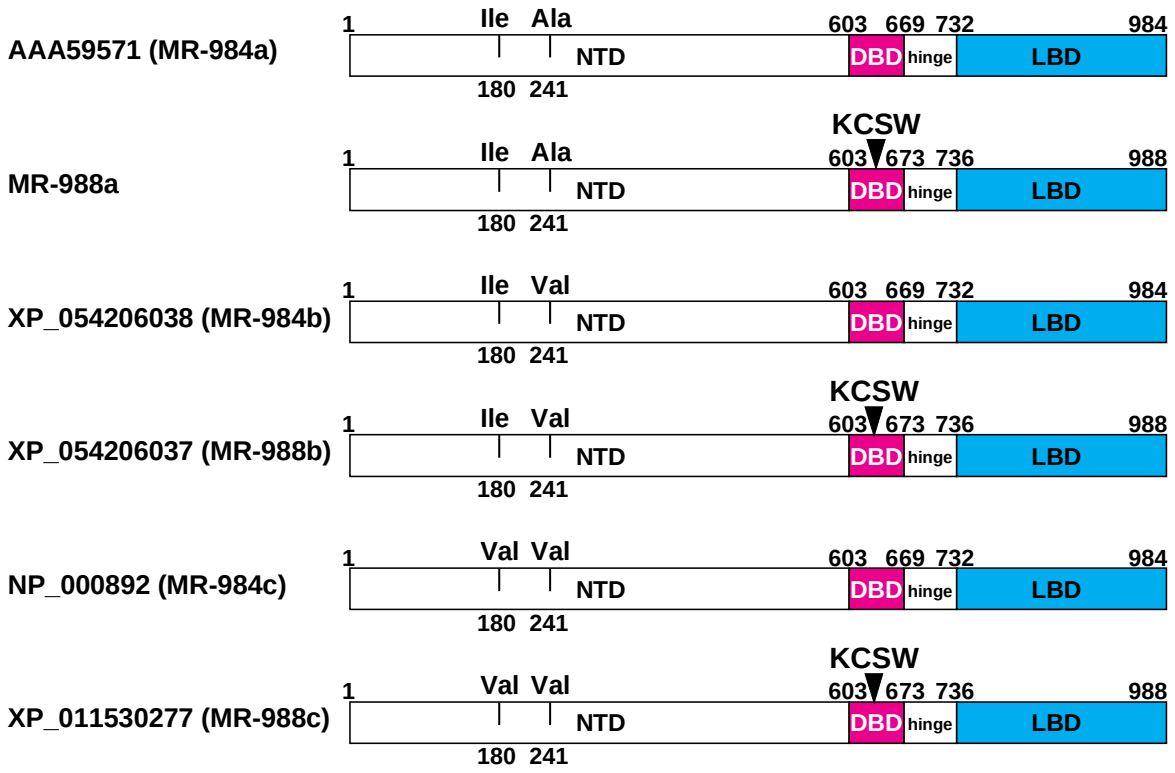

Figure 2. Human MR Genes in GenBank. There are three human MR genes with 984 amino acids and two human MR genes with 988 amino acids in GenBank. These MRs contain either isoleucine-180, alanine-241 MR-984a (accession AAA59571), isoleucine-180, valine-241 MR-984b (accession XP_054206038), or valine-180, valine-241 MR-984c (accession NP_000892), in the NTD. GenBank also contains two human MRs with 988 amino acids containing KCSW in the DBD and either isoleucine-180, valine-241 MR-988b (accession XP_054206037), or valine-180, valine-241 MR-988c (accession XP_01530277) in the NTD. A human MR with isoleucine-180 and alanine-241 and a KCSW insert in the NTD was not found in GenBank. MR-988a is our construction of this human MR, which we studied for activation by corticosteroids along with the other five human MR genes that are found in GenBank.

Human MR-984a, cloned by Arriza et al [1], has been studied for transcriptional activation by aldosterone and other corticosteroids [1,26,27,29,30]. However, it is not known if

the KCSW insert in the DBD of human MR affects its transcriptional activation by corticosteroids, and if so, how? To answer these questions, we compared transcriptional activation by corticosteroids of human MR-984 to human MR-988 containing KCSW in the DBD transfected into in HEK293 cells in the presence of the TAT3 promoter. Here we report that compared to human MR-984, human MR-988, has about 50% to 90% increased transcriptional activation by aldosterone, cortisol, and other corticosteroids, when these MRs are transfected into HEK293 cells. The physiological responses to corticosteroids in humans with MR genes containing KCSW in the DBD and with differences at codons 180 and 241 in their NTD warrant investigation.

2. Results

Corticosteroid-dependent activation of human MR-984 and human MR-988 containing KCSW.

We have used human MR-984a (accession AAA59571) [1] for our studies of the human MR [27]. For this project, as described in the Methods Section, we constructed MR-984b (accession XP_054206038), MR-988b (accession XP_054206037), MR-984c (accession NP_000892), MR-988c (accession XP_01530277). We also constructed MR-988a by insertion of KCSW into the DBD of MR-984a.

In Figure 3, we show the concentration dependence of transcriptional activation by corticosteroids of these six human MRs transfected into HEK293 cells with a TAT3 luciferase promoter. Luciferase levels were used to calculate an EC50 and fold-activation for each steroid (Table 1). These results reveal that the three human MR-988 genes with KCSW in the DBD have a substantial increase in transcriptional activation compared to their MR-984 counterparts, which lack KCSW, while there is only a modest change in EC50s of corticosteroids for MR-988 compared to MR-984. As shown in Figure 3 and Table 1, there also were differences in the level of transcriptional activation of MR-984a, MR-984b and MR-984c (Figure 3A-D), as well as for MR-988a, MR-988b and MR-9848c (Figure 3E-H), which have different amino acids at codons 180 and 241 in their NTD.

Compared to activation by aldosterone of the three human MRs with 984 amino acids, aldosterone increased fold activation by about 50% for MR-988a, MR-988b and MR-9848c, all of which contain KCSW in the DBD. As shown in Table 1, cortisol, which activates the MR in organs that lack 11β-hydroxysteroid dehydrogenase [7,42–44], increases fold activation by 29% for MR-988a compared to MR984a, by 73% for MR-988b compared to 984b and by 69% for MR-988c compared to MR-984c. Corticosterone increases fold activation by 94% for MR-988a compared to MR984a, by 78% for MR-988b compared to 984b and by 111% for MR-988c compared to MR-984c. 11-Deoxycorticosterone increases fold activation by 94% for MR-988a compared to MR984a, by 78% for MR-988b compared to 984b and by 90% for MR-988c compared to MR-984c.

The differences in human MR at codons 180 and 241 in the NTD influences corticosteroid activation of transcription. MR-984b and MR-988b, which have Ile-180 and Val-241 in the NTD, have the highest activation, and MR-984c and MR-988c, which have Val-180 and Val-241 in the NTD have the lowest fold activation. Transcriptional activation by aldosterone, cortisol and 11-deoxycorticosterone of MR-984a and MR-988a, which have Ile-180, Ala-241 in the NTD, is between that of MR-984b and MR-984c. An exception is corticosterone, which has similar activation of MR-988a and MR-988c. These results indicate that the NTD has an allosteric influence on transcriptional activation by corticosteroids of human MR.

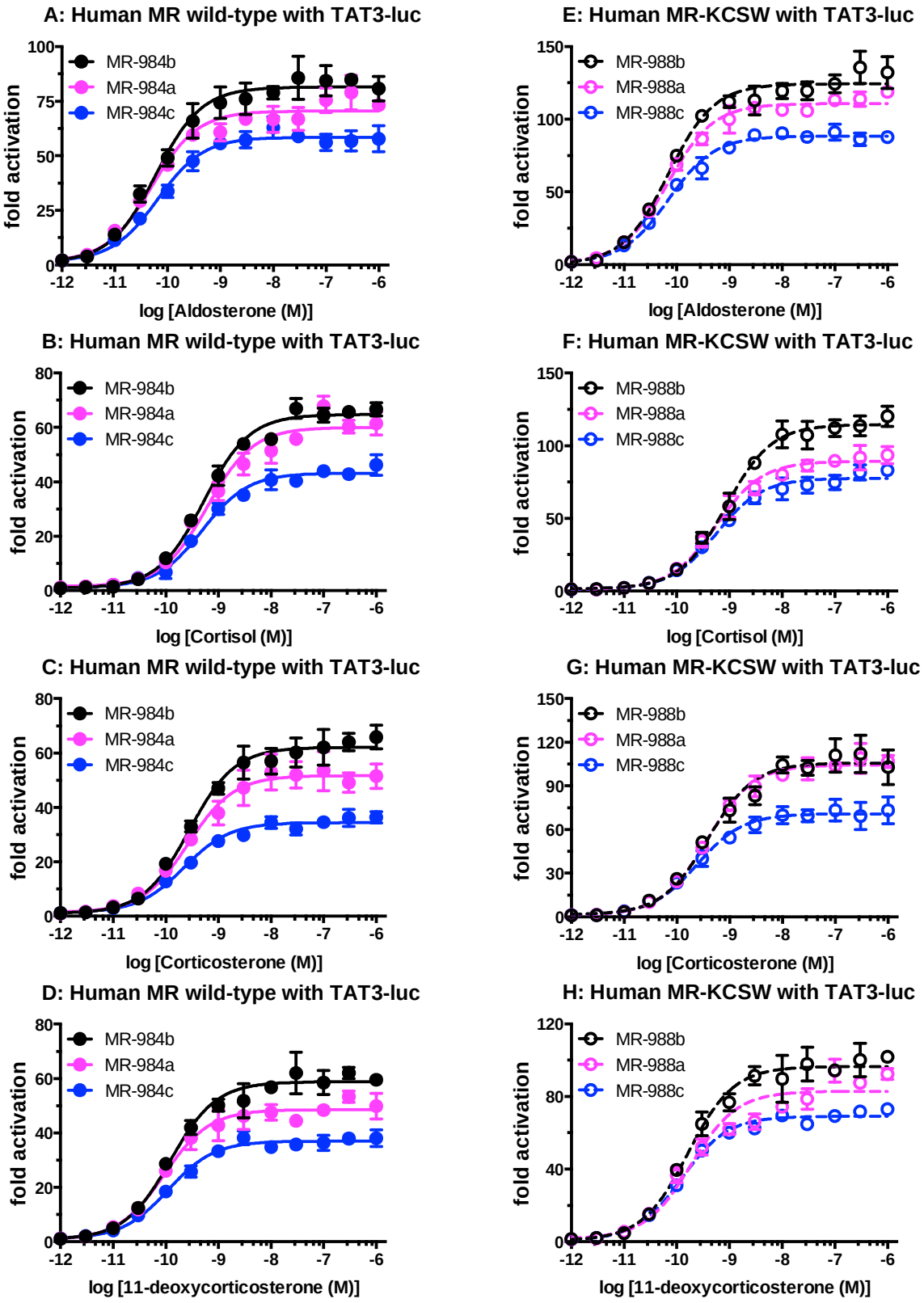
A: Human MR wild-type with TAT3-luc
MR-984b
MR-984a
MR-984c
fold activation
log [Aldosterone (M)]
B: Human MR wild-type with TAT3-luc
log [Cortisol (M)]
C: Human MR wild-type with TAT3-luc
log [Corticosterone (M)]
D: Human MR wild-type with TAT3-luc
log [11-deoxycorticosterone (M)]
E: Human MR-KCSW with TAT3-luc
MR-988b
MR-988a
MR-988c
F: Human MR-KCSW with TAT3-luc
G: Human MR-KCSW with TAT3-luc
H: Human MR-KCSW with TAT3-luc

Fig. 3. Concentration-dependent transcriptional activation by corticosteroids of human MR-984a, b and c and human MR-988a, b and c.

Plasmids for human MR-984a, b, c and human MR-988a, b, c were expressed in HEK293 cells with a TAT3-luciferase promoter [2,45,46]. Cells were treated with increasing concentrations of either aldosterone, cortisol, 11-deoxycorticosterone, corticosterone, or vehicle alone (DMSO). Results are expressed as means ± SEM, n=3. Y-axis indicates fold-activation compared to the activity of vector with vehicle (DMSO) alone as 1. A. Human MR-984 with aldosterone. B. Human MR-984 with cortisol. C. Human MR-984 with corticosterone. D. Human MR-984 with 11-deoxycorticosterone. E. Human MR-988 with aldosterone. F. Human MR-988 with cortisol. G. Human MR-988 with corticosterone. H. Human MR-988 with 11-deoxycorticosterone.

Table 1. Steroid Activation of human MR in HEK293 Cells with a TAT3 Promoter.

		TAT3-luc		TAT3-luc		TAT3-luc	
		MR-984a	MR-988a	MR-984b	MR-988b	MR-984c	MR-988c
Aldosterone	EC50 (nM)	0.05	0.067	0.059	0.069	0.064	0.069
	Fold-Activation (± SEM) *	75.5 (± 5.61)	113.1 (± 3.53)	84.3 (± 6.88)	124.3 (± 6.23)	56.0 (± 3.71)	91.0 (± 5.36)
	Ratio**	1	1.49	1	1.47	1	1.62
Cortisol	EC50 (nM)	0.61	0.56	0.52	0.85	0.49	0.56
	Fold-Activation (± SEM) *	67.8 (± 3.69)	89.5 (± 3.48)	64.5 (± 2.55)	112.1 (± 5.83)	43.9 (± 1.55)	74.6 (± 4.85)
	Ratio**	1	1.32	1	1.73	1	1.69
Corticosterone	EC50 (nM)	0.26	0.37	0.27	0.38	0.22	0.24
	Fold-Activation (± SEM) *	53.4 (± 7.21)	103.9 (± 2.91)	62.0 (± 6.53)	111.0 (± 11.35)	34.6 (± 1.85)	73.3 (± 7.58)
	Ratio**	1	1.94	1	1.78	1	2.11
11-deoxycorticosterone	EC50 (nM)	0.092	0.18	0.12	0.16	0.11	0.12
	Fold-Activation (± SEM) *	48.4 (± 1.41)	94.1 (± 6.28)	58.5 (± 4.49)	94.3 (± 1.19)	36.4 (± 1.64)	69.3 (± 2.31)
	Ratio**	1	1.94	1	1.61	1	1.90

*Fold activation values were calculated based on the 100 nM values.

**Ratio values were calculated by dividing the fold-activation value of MR-988 by the value of MR-984.

Discussion.

The human MR cloned by Arriza et al [1] has 984 amino acids (MR984a), and this is the MR that has been widely studied [7,9–11,13,15,24]. However, our BLAST search of GenBank [41] revealed that MR984a is not the only human MR in GenBank (Figure 2). GenBank also contains two human MRs (MR-988b, MR-988c) with KCSW beginning at 634 in the DBD and with different amino acids at codons 180 and 241 in the NTD, than are found in MR-988a, providing total of five distinct human MR sequences. To begin to understand the effects, if any, of the sequence differences among these human MRs, we studied corticosteroid activation of

MR-984b, MR-988b, MR-984c and MR-988c for comparison with each other and with MR-984a. We also constructed MR988a for comparison with human MR984a and the other four human MR genes.

We find a clear increase in transcriptional activation by aldosterone and other corticosteroids of human MRs with 988 amino acids and KCSW in the DBD. Thus, insertion into an ancestral MR of KCSW by alternative splicing in the DBD resulted in increased transcriptional activation of human MR by aldosterone and other corticosteroids [Figure 3, Table 1]. This increase of MR transcription by aldosterone and other corticosteroids may also occur in other terrestrial vertebrate MRs with KCSW in the DBD.

We find that mutations at codons 180 and 241 in the NTD of human MR also affect transcriptional activation by aldosterone and other corticosteroids. This allosteric effect of two mutations in the human NTD was surprising. Compared to chimpanzee, gorilla and orangutan MRs, human MRs are unique in containing an MR with either (Ile-180, Ala-241) or (Val-180, Val-241) in their NTD [41]. That is, chimpanzees, gorillas and orangutans lack an MR with either (Ile-180, Ala-241) or (Val-180, Val-241) in their NTD. We propose that MRs with (Ile-180, Ala-241) or (Val-180, Val-241) in their NTD evolved in humans after divergence from chimpanzees and the evolution of these MRs. In the light of the diverse physiological functions of the MR in humans in regulating transcription in kidney, brain, heart, skin, lungs and other tissues [11,13–22], the evolution of human MRs with (Ile-180, Ala-241) or (Val-180, Val-241) in their NTD may have been important in the evolution of humans from chimpanzees [41].

The interaction of the MR with the GR to form heterodimers is important [47–51]. The response to aldosterone and other corticosteroids to heterodimers of human MRs containing KCSW in the DBD, as well as either (Ile-180, Ala-241), (Ile-180, Val-241) or (Val-180, Val-241) with human GR needs to be explored.

Materials & Methods

Construction of plasmid vectors

Full-length mineralocorticoid receptor (MR) of human as registered in Genbank (accession number: XP_054206038) was used as MR-984 to construct MR-984b, MR-984c, MR-988a, MR-988b, MR-988c. The insertion of 4-amino acids (Lys-Cys-Ser-Trp) into the DBD after codon 633 of human MR was performed using KOD-Plus-mutagenesis kit (TOYOBO). The nucleic acid sequences of all constructs were verified by sequencing.

Chemical reagents

Cortisol, corticosterone, 11-deoxycorticosterone and aldosterone were purchased from Sigma-Aldrich. For reporter gene assays, all hormones were dissolved in dimethyl-sulfoxide (DMSO); the final DMSO concentration in the culture medium did not exceed 0.1%.

Transactivation assays and statistical analyses

Transfection and reporter assays were carried out in HEK293 cells, as described previously [27]. The cells were transfected with 100 ng of receptor gene, reporter gene containing the *Photinus pyralis* luciferase gene and pRL-tk, as an internal control to normalize for variation in transfection efficiency; pRL-tk contains the *Renilla reniformis* luciferase gene with the herpes simplex virus thymidine kinase promoter. Each assay had a similar number of cells, and assays were done with the same batch of cells in each experiment. All experiments were performed in triplicate. Promoter activity was calculated as firefly (*P. pyralis*)-lucifease activity/sea pansy (*R. reniformis*)-lucifease activity. The values shown are mean ± SEM from three separate experiments, and dose-response data, which were used to calculate the half maximal response (EC50) for each steroid, were analyzed using GraphPad Prism.

Funding: This work was supported by Grants-in-Aid for Scientific Research from the Ministry of Education, Culture, Sports, Science and Technology of Japan (23K05839) to Y.K., and the Takeda Science Foundation to Y.K.

Competing interests: The authors have declared that no competing interests exist.

Contributions.

Yoshinao Katsu: Investigation, Conceptualization, Supervision, Formal Analysis, Writing – original draft, Writing – review & editing.

Jiawen Zhan: Data curation, Investigation, Methodology.

Michael E. Baker: Conceptualization; Formal analysis, Supervision, Writing – original draft, Writing – review & editing.

References

[1] Arriza JL, Weinberger C, Cerelli G, et al. Cloning of human mineralocorticoid receptor complementary DNA: structural and functional kinship with the glucocorticoid receptor. Science. 1987;237(4812):268-275. doi:10.1126/science.3037703, (n.d.).

[2] Evans RM. The steroid and thyroid hormone receptor superfamily. Science. 1988;240(4854):889-895. doi:10.1126/science.3283939, (n.d.).

[3] Bridgham JT, Eick GN, Larroux C, et al. Protein evolution by molecular tinkering: diversification of the nuclear receptor superfamily from a ligand-dependent ancestor. PLoS Biol. 2010;8(10):e1000497. Published 2010 Oct 5. doi:10.1371/journal.pbio.1000497, (n.d.).

[4] Baker ME, Nelson DR, Studer RA. Origin of the response to adrenal and sex steroids: Roles of promiscuity and co-evolution of enzymes and steroid receptors. J Steroid Biochem Mol Biol. 2015;151:12-24. doi:10.1016/j.jsbmb.2014.10.020, (n.d.).

[5] Baker ME. Steroid receptors and vertebrate evolution. Mol Cell Endocrinol. 2019;496:110526. doi:10.1016/j.mce.2019.110526, (n.d.).

[6] Evans RM, Mangelsdorf DJ. Nuclear Receptors, RXR, and the Big Bang. Cell. 2014 Mar 27;157(1):255-66. doi: 10.1016/j.cell.2014.03.012. PMID: 24679540; PMCID: PMC4029515., (n.d.).

[7] Rossier BC, Baker ME, Studer RA. Epithelial sodium transport and its control by aldosterone: the story of our internal environment revisited. Physiol Rev. 2015;95(1):297-340. doi:10.1152/physrev.00011.2014, (n.d.).

[8] Hanukoglu I, Hanukoglu A. Epithelial sodium channel (ENaC) family: Phylogeny, structure-function, tissue distribution, and associated inherited diseases. Gene. 2016;579(2):95-132. doi:10.1016/j.gene.2015.12.061, (n.d.).

[9] Lifton RP, Gharavi AG, Geller DS. Molecular mechanisms of human hypertension. Cell. 2001;104(4):545-556. doi:10.1016/s0092-8674(01)00241-0, (n.d.).

[10] Shibata S. 30 YEARS OF THE MINERALOCORTICOID RECEPTOR: Mineralocorticoid receptor and NaCl transport mechanisms in the renal distal nephron. J Endocrinol. 2017;234(1):T35-T47. doi:10.1530/JOE-16-0669, (n.d.).
[11] Grossmann C, Almeida-Prieto B, Nolze A, Alvarez de la Rosa D. Structural and molecular determinants of mineralocorticoid receptor signalling. Br J Pharmacol. 2021 Nov 22. doi: 10.1111/bph.15746. Epub ahead of print. PMID: 34811739., (n.d.).
[12] Fernandes-Rosa FL, Boulkroun S, Fedlaoui B, Hureaux M, Travers-Allard S, Drossart T, Favier J, Zennaro MC. New advances in endocrine hypertension: from genes to biomarkers. Kidney Int. 2023 Mar;103(3):485-500. doi: 10.1016/j.kint.2022.12.021. Epub 2023 Jan 13. PMID: 36646167., (n.d.).
[13] Hawkins UA, Gomez-Sanchez EP, Gomez-Sanchez CM, Gomez-Sanchez CE. The ubiquitous mineralocorticoid receptor: clinical implications. Curr Hypertens Rep. 2012;14(6):573-580. doi:10.1007/s11906-012-0297-0, (n.d.).
[14] Jaisser F, Farman N. Emerging Roles of the Mineralocorticoid Receptor in Pathology: Toward New Paradigms in Clinical Pharmacology. Pharmacol Rev. 2016;68(1):49-75. doi:10.1124/pr.115.011106, (n.d.).
[15] Funder J. 30 YEARS OF THE MINERALOCORTICOID RECEPTOR: Mineralocorticoid receptor activation and specificity-conferring mechanisms: a brief history. J Endocrinol. 2017 Jul;234(1):T17-T21. doi: 10.1530/JOE-17-0119. Epub 2017 May 22. PMID: 28533421., (n.d.).
[16] Fuller PJ. Novel interactions of the mineralocorticoid receptor. Mol Cell Endocrinol. 2015 Jun 15;408:33-7. doi: 10.1016/j.mce.2015.01.027. Epub 2015 Feb 7. PMID: 25662276., (n.d.).
[17] Gomez-Sanchez EP. Brain mineralocorticoid receptors in cognition and cardiovascular homeostasis. Steroids. 2014 Dec;91:20-31. doi: 10.1016/j.steroids.2014.08.014. PMID: 25173821; PMCID: PMC4302001., (n.d.).
[18] De Kloet ER, Vreugdenhil E, Oitzl MS, Joëls M. Brain corticosteroid receptor balance in health and disease. Endocr Rev. 1998 Jun;19(3):269-301. doi: 10.1210/edrv.19.3.0331. PMID: 9626555., (n.d.).
[19] Arriza JL, Simerly RB, Swanson LW, Evans RM. The neuronal mineralocorticoid receptor as a mediator of glucocorticoid response. Neuron. 1988 Nov;1(9):887-900. doi: 10.1016/0896-6273(88)90136-5. PMID: 2856104., (n.d.).
[20] de Kloet ER, Joëls M. Brain mineralocorticoid receptor function in control of salt balance and stress-adaptation. Physiol Behav. 2017 Sep 1;178:13-20. doi: 10.1016/j.physbeh.2016.12.045. Epub 2017 Jan 13. PMID: 28089704., (n.d.).
[21] Paul SN, Wingenfeld K, Otte C, Meijer OC. Brain mineralocorticoid receptor in health and disease: From molecular signalling to cognitive and emotional function. Br J Pharmacol. 2022 Jul;179(13):3205-3219. doi: 10.1111/bph.15835. Epub 2022 Apr 7. PMID: 35297038; PMCID: PMC9323486., (n.d.).
[22] Ibarrola J, Jaffe IZ. The Mineralocorticoid Receptor in the Vasculature: Friend or Foe? Annu Rev Physiol. 2024 Feb 12;86:49-70. doi: 10.1146/annurev-physiol-042022-015223. Epub 2023 Oct 3. PMID: 37788489., (n.d.).
[23] Beato M, Arnemann J, Chalepakis G, Slater E, Willmann T. Gene regulation by steroid hormones. J Steroid Biochem. 1987;27(1-3):9-14. doi: 10.1016/0022-4731(87)90288-3. PMID: 2826895., (n.d.).

[24] Baker ME, Katsu Y. 30 YEARS OF THE MINERALOCORTICOID RECEPTOR: Evolution of the mineralocorticoid receptor: sequence, structure and function. J Endocrinol. 2017;234(1):T1-T16. doi:10.1530/JOE-16-0661, (n.d.).
[25] Rogerson FM, Fuller PJ. Interdomain interactions in the mineralocorticoid receptor. Mol Cell Endocrinol. 2003 Feb 28;200(1-2):45-55. doi: 10.1016/s0303-7207(02)00413-6. PMID: 12644298., (n.d.).
[26] Rupprecht R, Arriza JL, Spengler D, et al. Transactivation and synergistic properties of the mineralocorticoid receptor: relationship to the glucocorticoid receptor. Mol Endocrinol. 1993;7(4):597-603. doi:10.1210/mend.7.4.8388999, (n.d.).
[27] Katsu Y, Oka K, Baker ME. Evolution of human, chicken, alligator, frog, and zebrafish mineralocorticoid receptors: Allosteric influence on steroid specificity. Sci Signal. 2018 Jul 3;11(537):eaao1520. doi: 10.1126/scisignal.aao1520. PMID: 29970600., (n.d.).
[28] Funder JW. Glucocorticoid and mineralocorticoid receptors: biology and clinical relevance. Annu Rev Med. 1997;48:231-40. doi: 10.1146/annurev.med.48.1.231. PMID: 9046958., (n.d.).
[29] Hellal-Levy C, Couette B, Fagart J, Souque A, Gomez-Sanchez C, Rafestin-Oblin M. Specific hydroxylations determine selective corticosteroid recognition by human glucocorticoid and mineralocorticoid receptors. FEBS Lett. 1999;464(1-2):9-13. doi:10.1016/s0014-5793(99)01667-1, (n.d.).
[30] Grossmann C, Scholz T, Rochel M, Bumke-Vogt C, Oelkers W, Pfeiffer AF, Diederich S, Bahr V. Transactivation via the human glucocorticoid and mineralocorticoid receptor by therapeutically used steroids in CV-1 cells: a comparison of their glucocorticoid and mineralocorticoid properties. Eur J Endocrinol. 2004 Sep;151(3):397-406. doi: 10.1530/eje.0.1510397. PMID: 15362971., (n.d.).
[31] Shimeld SM, Donoghue PC. Evolutionary crossroads in developmental biology: cyclostomes (lamprey and hagfish). Development. 2012 Jun;139(12):2091-9. doi: 10.1242/dev.074716. PMID: 22619386., (n.d.).
[32] Close DA, Yun SS, McCormick SD, Wildbill AJ, Li W. 11-deoxycortisol is a corticosteroid hormone in the lamprey. Proc Natl Acad Sci U S A. 2010 Aug 3;107(31):13942-7. doi: 10.1073/pnas.0914026107. Epub 2010 Jul 19. PMID: 20643930; PMCID: PMC2922276., (n.d.).
[33] Thornton JW. Evolution of vertebrate steroid receptors from an ancestral estrogen receptor by ligand exploitation and serial genome expansions. Proc Natl Acad Sci U S A. 2001 May 8;98(10):5671-6. doi: 10.1073/pnas.091553298. Epub 2001 May 1. PMID: 11331759; PMCID: PMC33271., (n.d.).
[34] Smith JJ, Kuraku S, Holt C, Sauka-Spengler T, Jiang N, Campbell MS, Yandell MD, Manousaki T, Meyer A, Bloom OE, Morgan JR, Buxbaum JD, Sachidanandam R, Sims C, Garruss AS, Cook M, Krumlauf R, Wiedemann LM, Sower SA, Decatur WA, Hall JA, Amemiya CT, Saha NR, Buckley KM, Rast JP, Das S, Hirano M, McCurley N, Guo P, Rohner N, Tabin CJ, Piccinelli P, Elgar G, Ruffier M, Aken BL, Searle SM, Muffato M, Pignatelli M, Herrero J, Jones M, Brown CT, Chung-Davidson YW, Nanlohy KG, Libants SV, Yeh CY, McCauley DW, Langeland JA, Pancer Z, Fritzsch B, de Jong PJ, Zhu B, Fulton LL, Theising B, Flicek P, Bronner ME, Warren WC, Clifton SW, Wilson RK, Li W. Sequencing of the sea lamprey (Petromyzon marinus) genome provides insights into vertebrate evolution. Nat Genet. 2013 Apr;45(4):415-21, 421e1-2. doi: 10.1038/ng.2568. Epub 2013 Feb 24. PMID: 23435085; PMCID: PMC3709584., (n.d.).

[35] York JR, McCauley DW. The origin and evolution of vertebrate neural crest cells. Open Biol. 2020 Jan;10(1):190285. doi: 10.1098/rsob.190285. Epub 2020 Jan 29. PMID: 31992146; PMCID: PMC7014683., (n.d.).
[36] Kuratani S. Evo-devo studies of cyclostomes and the origin and evolution of jawed vertebrates. Curr Top Dev Biol. 2021;141:207-239. doi: 10.1016/bs.ctdb.2020.11.011. Epub 2020 Dec 13. PMID: 33602489., (n.d.).
[37] Janvier P. microRNAs revive old views about jawless vertebrate divergence and evolution. Proc Natl Acad Sci U S A. 2010 Nov 9;107(45):19137-8. doi: 10.1073/pnas.1014583107. Epub 2010 Nov 1. PMID: 21041649; PMCID: PMC2984170., (n.d.).
[38] Bloem LJ, Guo C, Pratt JH. Identification of a splice variant of the rat and human mineralocorticoid receptor genes. J Steroid Biochem Mol Biol. 1995 Nov;55(2):159-62. doi: 10.1016/0960-0760(95)00162-s. PMID: 7495694., (n.d.).
[39] Wickert L, Watzka M, Bolkenius U, Bidlingmaier F, Ludwig M. Mineralocorticoid receptor splice variants in different human tissues. Eur J Endocrinol. 1998 Jun;138(6):702-4. doi: 10.1530/eje.0.1380702. PMID: 9678540., (n.d.).
[40] Wickert L, Selbig J, Watzka M, Stoffel-Wagner B, Schramm J, Bidlingmaier F, Ludwig M. Differential mRNA expression of the two mineralocorticoid receptor splice variants within the human brain: structure analysis of their different DNA binding domains. J Neuroendocrinol. 2000 Sep;12(9):867-73. doi: 10.1046/j.1365-2826.2000.00535.x. PMID: 10971811., (n.d.).
[41] Katsu Y, Zhang J, Baker Michael E, Novel Evolution of the Mineralocorticoid Receptor in Humans Compared to Chimpanzees, Gorillas and Orangutans. bioRxiv 2023.12.08.570861; doi: https://doi.org/10.1101/2023.12.08.570861, bioRxiv (2023).
[42] Chapman K, Holmes M, Seckl J. 11β-hydroxysteroid dehydrogenases: intracellular gate-keepers of tissue glucocorticoid action. Physiol Rev. 2013 Jul;93(3):1139-206. doi: 10.1152/physrev.00020.2012. PMID: 23899562; PMCID: PMC3962546., (n.d.).
[43] Frey FJ, Odermatt A, Frey BM. Glucocorticoid-Mediated Mineralocorticoid Receptor Activation and Hypertension. Curr Opin Nephrol Hypertens. 2004 Jul;13(4):451-8. Doi: 10.1097/01.Mnh.0000133976.32559.B0. PMID: 15199296., (n.d.).
[44] Funder JW. Apparent mineralocorticoid excess. J Steroid Biochem Mol Biol. 2017 Jan;165(Pt A):151-153. doi: 10.1016/j.jsbmb.2016.03.010. Epub 2016 Mar 5. PMID: 26956190., (n.d.).
[45] Iñiguez-Lluhí JA, Pearce D. A common motif within the negative regulatory regions of multiple factors inhibits their transcriptional synergy. Mol Cell Biol. 2000 Aug;20(16):6040-50. doi: 10.1128/mcb.20.16.6040-6050.2000. PMID: 10913186; PMCID: PMC86080., (n.d.).
[46] Lombès M, Binart N, Oblin ME, Joulin V, Baulieu EE. Characterization of the interaction of the human mineralocorticosteroid receptor with hormone response elements. Biochem J. 1993 Jun 1;292 (Pt 2)(Pt 2):577-83. doi: 10.1042/bj2920577. PMID: 8389140; PMCID: PMC1134249., (n.d.).
[47] Liu W, Wang J, Sauter NK, Pearce D. Steroid receptor heterodimerization demonstrated in vitro and in vivo. Proc Natl Acad Sci U S A. 1995 Dec 19;92(26):12480-4. doi: 10.1073/pnas.92.26.12480. PMID: 8618925; PMCID: PMC40381., (n.d.).
[48] Trapp T, Holsboer F. Heterodimerization between mineralocorticoid and glucocorticoid receptors increases the functional diversity of corticosteroid action. Trends Pharmacol Sci. 1996 Apr;17(4):145-9. doi: 10.1016/0165-6147(96)81590-2. PMID: 8984741., (n.d.).

[49] Mifsud KR, Reul JM. Acute stress enhances heterodimerization and binding of corticosteroid receptors at glucocorticoid target genes in the hippocampus. Proc Natl Acad Sci U S A. 2016 Oct 4;113(40):11336-11341. doi: 10.1073/pnas.1605246113. Epub 2016 Sep 21. PMID: 27655894; PMCID: PMC5056104., (n.d.).

[50] Pooley JR, Rivers CA, Kilcooley MT, Paul SN, Cavga AD, Kershaw YM, Muratcioglu S, Gursoy A, Keskin O, Lightman SL. Beyond the heterodimer model for mineralocorticoid and glucocorticoid receptor interactions in nuclei and at DNA. PLoS One. 2020 Jan 10;15(1):e0227520. doi: 10.1371/journal.pone.0227520. PMID: 31923266; PMCID: PMC6953809., (n.d.).

[51] Kiilerich P, Triqueneaux G, Christensen NM, et al. Interaction between the trout mineralocorticoid and glucocorticoid receptors in vitro. J Mol Endocrinol. 2015;55(1):55-68. doi:10.1530/JME-15-0002, (n.d.).