Anatomy of a pest control failure: Introgression of cytochrome P450 337B3 alleles from invasive old-world bollworm into native corn earworm (Lepidoptera: Noctuidae).

Marissa I. Nufer[1], Brad S. Coates[2], Craig A. Abel[2], Patrick O'Neill[3], Morgan McCracken[4], Devendra Jain[1, 5], Calvin A. Pierce[1], James Glover[1], Tyler Towles[6], Gadi VP Reddy[1] and Omaththage P. Perera[1§]

[1]USDA ARS, Southern Insect Management Research Unit, 141 Experiment Station Road, Stoneville, MS, USA

[2]USDA-ARS, Corn Insects & Crop Genetics Research Unit, Science II, 2310 Pammel Dr., Ames, IA.

[3]Soil Health Services, 4955 Hwy 348, Olathe, CO.

[4]Olathe Spray Services, Inc. Olathe, CO.

[5]Maharana Pratap University for Agriculture and Technology, Udaipur, Rajasthan, India

[6] Delta Research and Extension Center, Mississippi State University, Stoneville, MS, USA

[§] Corresponding Author

Acknowledgment

Authors thank Fanny Liu, USDA-ARS Biological Control Pests Research Unit, Stoneville, MS and Tina Ward and Miriam Lopez, USDA-ARS Corn Insects& Crop Genetics Research Unit, Ames, IA, for assistance with Sanger nucleotide sequencing. Mention of trade names or commercial products in this article is solely for the purpose of providing specific information and does not imply recommendation or endorsement by the US Department of Agriculture. USDA is an equal opportunity provider and employer.

Author contributions

Conceptualization: MIN, OPP, and BSC. Methodology: MIN, OPP, CAP, DJ, and JG. Investigation: MIN, OPP, CAP, BSC, CAA, and DJ; Formal Analysis: MIN, OPP, BSC, CAA, and JG; Writing - Original Draft: MIN and OPP. Writing - Review & Editing: All authors. Resources: PON, MC, TT, and GVPR; Supervision: OPP.

Abstract

The establishment of invasive species populations can threaten the ecological balance in naïve habitats and impact agricultural production practices. *Helicoverpa armigera* (old-world bollworm, OWBW) and *H. zea* (corn earworm, CEW) were geographically separated prior to the 2013 report of OWBW invasion into South America. Introgression of OWBW-specific cytochrome P450 337B3 (CYP337B3) gene into CEW was repeatedly detected across South America and the Caribbean. Two hybrids were documented from Texas in 2019. In this study, screening insects collected in Olathe, Colorado, USA, where a failure of pyrethroids to control CEW damage to conventional sweetcorn in 2023 detected 28.6% of insects with the OWBW-specific CYP337B3 marker. Nucleotide sequencing of the CYP337B3 gene identified 73.1 and 26.9% of insects carried CYP337B3v2 and CYP337B3v6 alleles, respectively and 0.15 overall frequency of CYP337B3 alleles. Based on prior data for distinct phylogeographic origins of CYP337B3v2 and v6 alleles, our results indicate Olathe samples were derived from two different introductions; An uncertain source of the v6 allele that was initially reported in West Africa and possibly South American or Caribbean origin of the globally distributed v2 allele. One of the 1618 individuals screened also carried a ribosomal RNA internal transcribed spacer 1 (ITS1) derived from OWBW. Local selection pressures at the Olathe location imposed by repeated pyrethroid exposures are likely attributed to the prevalence of CYP337B3, where control practices hasten the accumulation of phenotypic resistance by adaptive introgression. Pyrethroid and other resistance factors carried by invasive OWBW may continue to impact CEW management tactics across the Americas.

Keywords: tomato fruit worm, Noctuid pest, insecticide, pest management, selective advantage

Introduction

Invasive insect species can disrupt naïve ecosystems, impact the health of native species, and introduce challenges to agricultural production (Venette and Hutchison 2021). An invasive species undergoes an initial establishment phase with varying levels of adaptation to new ecosystems and environmental conditions (Colautti et al. 2017). Ironically, invasive populations typically undergo a genetic bottleneck due to a small number of founders, where this reduced genetic diversity would reduce adaptive potential. Bottleneck effects can be alleviated through admixture following multiple introduction events from genetically distinct source populations, where increased genetic diversity in admixed populations can lead to higher fitness (Jaspers et al. 2021). Establishment can also be facilitated by interspecific hybridization with native species, which can transfer locally adapted alleles to invasive populations through a mechanism referred to as adaptive introgression (Arnold and Martin 2009, Jin et al. 2023). Conversely, native populations may also acquire alleles with a selective advantage from an invasive species (Burgarella et al. 2019)

The sister species *Helicoverpa armigera* (Hübner) (Lepidoptera: Noctuidae) and *H. zea* (Boddie) (Lepidoptera: Noctuidae) are morphologically similar but distinguishable via differences in male genitalia (Pouge 2004). The endemic range of *H. zea* spans the Americas, wherein larvae cause feeding damage to multiple high-value crops (Reay-Jones 2019). *Helicoverpa armigera* feeds on a broader range of host plants (Fitt 1989) and is historically distributed across Africa, Asia, Europe, and Oceania (Kitching and Rawlins 1998). Invasion and establishment of *H. armigera* into the Americas were first reported in Bahia, Goiás, and Mato Grosso states in Brazil in 2013 using morphological characters and the histology of male genitalia (Czepak et al. 2013). The presence of *H. armigera* was confirmed through analysis of

46 mitochondrial DNA (Tay et al. 2013). Later, *H. armigera* was reported in other regions of Brazil
47 and additional South American countries including Argentina, Colombia, Paraguay, Uruguay,
48 and Venezuela (Specht et al. 2013, Arnemann et al. 2016, Arnemann et al. 2019, Riaz et al.
49 2021). Evidence suggests that these *H. armigera* populations resulted from multiple independent
50 introductions (Tay et al. 2017, Arnemann et al. 2019, Tembrock et al. 2019). Laboratory
51 experiments produced viable progeny from reciprocal crosses and backcrosses between *H.*
52 *armigera* and *H. zea* (Laster and Sheng 1995), demonstrating incomplete barriers to
53 reproduction. Genomic analyses of *Helicoverpa* populations detected evidence of hybridization
54 between *H. armigera* and *H. zea* among field collections, and the introgression of *H. armigera*
55 alleles into *H. zea* (Valencia-Montoya et al. 2020). These findings include the characterization of
56 introgression of the *H. armigera* locus for a cytochrome P450, CYP337B3, associated with
57 insecticide resistance into the *H. zea* genomic background (Walsh et al. 2018).

58 High mobility of migratory *Helicoverpa* and its modeling predict a high probability of *H.*
59 *armigera* spreading and establishing in North America (Kriticos et al. 2015). *Helicoverpa*
60 *armigera* was initially detected outside South America in Puerto Rico and Florida in 2014 and
61 2015, respectively (Smith 2014, Hayden and Brambila 2015, USDA-APHIS 2024). *Helicoverpa*
62 *armigera* genome introgression was also predicted using genomic DNA sequence data from prior
63 studies (Anderson et al. 2018) to characterize four *H. zea* samples collected from New York in
64 2017 as hybrids (Trujillo et al. 2024). The pest surveillance program of the USDA Animal and
65 Plant Health Inspection Service (USDA APHIS) later detected several *H. armigera* adults near
66 the Chicago O'Hare International Airport between 2019 and 2022, however, no individuals were
67 detected in surrounding agricultural areas (USDA-APHIS 2024). Introgression between these
68 two species was shown by the detection of the invasive *H. armigera*-specific CYP337B3 allele

in two *H. zea* collected from a Texas population in 2019 (North et al. 2024). Our current study focuses on a collection of *Helicoverpa* moths from Olathe, Colorado, where a failure to control damage to conventional sweetcorn was reported following repeated pyrethroid insecticide applications in 2023. Noctuid pest management effort involved initial applications of fenvalerate and mid-season applications of methomyl, chlorantraniliprole, nucleopolyhedroviruses, and Spinetoram. Evaluations of increased carrier volumes for aerial applications, maximum labeled rate use per spray, maximum allowable frequency on repeat applications, and daily and every-other-day spraying regimes were all undertaken, using the aforementioned active ingredients. An additional active ingredient, methoxyfenozide, labeled for sweet corn and lepidopteran pests, was trialed under the direction of the product's manufacturer to evaluate the potential for that material to be used via fixed-wing aircraft, with reduced carrier volume applications. However those trials proved ineffective at adding to the suppression of larval populations in the sweetcorn fields.

Currently a limited number of genetic markers are available to screen invasive *H. armigera.* Regardless, our analyses of species-specific genetic markers at ITS1 (Perera et al. 2015) and CYP337B3 loci (Joußen et al. 2012) detected *H. armigera* alleles in the Olathe samples. DNA from *H. zea* collected in 2006 from Mississippi and Texas was used as the reference. Our work constitutes the second report of *H. zea* carrying genes introgressed from *H. armigera* within the USA. Pyrethroid resistance conferred by the movement of the CYP337B3 allele into the *H. zea* population has implications for the continued efficacy of insecticidal control tactics used to manage this crop pest.

Materials and Methods

91 Insects were collected using *Helicoverpa zea* pheromone lures in bucket traps (Trece, Adair,
92 OK) at 53 locations near Olathe, CO, USA, during the summer of 2023 (**Supp. Table S1 and**
93 **Supp. Fig. S1**). A sweetcorn grower near these traps reported that repeated applications of
94 pyrethroid insecticide failed to control insect damage to the crop, and local scouting provided
95 visual identification of surviving larval *H. zea*. Initial screening of insects was carried out by
96 pooling a single leg from each adult male from each trap collection (or all the detached legs in a
97 collection bag) and extracting DNA using a modified squish buffer containing 10 mM Tris-HCl,
98 0.25 mM EDTA, and 0.25 mM NaCl (Perera et al. 2015). Two 3-mm stainless steel beads were
99 added to the tubes containing insect legs and homogenized using a bead beater (Biospec
100 Products, Bartlesville, OK) for 1 min at the highest speed. Homogenates were centrifuged briefly
101 and heated for 5 min in a heating block set to 100 °C, followed by centrifugation at 12,500 x g
102 for 10 min. DNA was also extracted from *H. zea* collected in 2006 from ten counties in Texas (*n*
103 = 200) and five counties in Mississippi (*n* = 100), and included in this study. For these, a small
104 piece of thoracic tissue from five insects was pooled into one tube to extract DNA using 150 µl
105 of squish buffer as described above.

106 Several strategies were used to identify invasive *H. armigera* in the samples and confirm
107 the presence of introgressed genes. First, the legs of insects were pooled by collection date to
108 perform ITS1 melt curve analysis that identifies *H. armigera* in bulk samples (Perera et al.
109 2015). Second, the *H. armigera* ITS1 gene was identified in a pooled set of samples, and the
110 DNA of individual insects from that pool was PCR amplified and sequenced to confirm the
111 presence of *H. armigera* ITS1 gene. Next, DNA from individual insects was PCR amplified with
112 primers specific for the *H. armigera* CYP337B3 gene followed by verification of hemizygous or
113 homozygous state of the CYP337B3 gene by PCR amplification of CYP337B1 and CYP337B2

genes using gene gene-specific primers. Lastly, longer PCR amplicons for CYP337B3 were generated and sequenced to obtain nucleotide sequences for the differentiation of alleles.

The supernatant from each extract was transferred to a new tube and used in the melt curve analysis (Perera et al. 2015). Briefly, 1 µl of each DNA pool was used in a 20 µl reaction containing final concentrations of 1X Fast SYBR Master mix (Life Technologies Corporation, Carlsbad, CA) 0.4 µM common forward primer 3373Ha_Hz_ITS1F for internal transcribed spacer 1 (ITS1) of ribosomal RNA gene, *H. armigera*-specific reverse primer 3374Ha_ITS1R, and 0.2 µM of *H. zea*-specific reverse primer 3377Hz_ITS1R (**Table 1**). DNA amplification and melt curve analysis were performed in an ABI7500 Fast real-time PCR instrument (Applied Biosystems, Foster City) with 95 °C initial denaturation for 30 seconds followed by 40 cycles of denaturation at 95 °C for 5 seconds and annealing and extension at 60 °C for 30 seconds. A melt curve step was performed after the amplification cycles to determine the presence of species-specific amplicons. Agarose gel electrophoresis was performed to visualize the amplicons as a verification step.

Full-length ITS1 was amplified from individual DNA using the primers 310-18S-rDNA-2F and 312-5.8S-rDNA-R (**Table 1**) in reactions containing 1X ThermoPol buffer (12.5 mM tricine, 42.5 mM KCl, 1.5 mM $MgCl_2$, 6% dextran; New England BioLabs, Ipswich, MA), 0.32 mM dNTP mix, 0.4 µM of each primer, 1 unit of *Taq* polymerase, and 10–100 ng of genomic DNA in a 25 ml reaction. Amplification was performed in a PTC-200 thermal cycler (MJ Research, BioRad, Hercules, CA) with a 30 s initial denaturation step at 95 °C, 35 cycles of 15 s denaturation at 95 °C, 10 s annealing at 52 °C followed by a final extension of 5 min at 72 °C (Perera et al. 2015). Amplicons were purified using AmPure XP magnetic beads according to manufacturer instructions (Beckman Coulter, Brea, CA). Approximately 2 ng of amplicon from

137 82 separate pools was used as input for the Oxford Nanopore library construction reagent set
138 SQK-LSK114 and the native DNA barcode kit SQK-NDB-96. The resulting 82 indexed libraries
139 were sequenced in a FLO-MIN114.001 flow cell following the manufacturer's instructions
140 (Oxford Nanopore Technologies, New York, NY). Purified ITS1 DNA from sample 61e was
141 also cloned into TA cloning vector (Invitrogen, Carlsbad, CA) and transformed into DH5α
142 competent cells. Plasmid DNA prepared from 24 colonies were screened for the presence of *H.*
143 *armigera*- and *H. zea*-specific amplicons as described previously. Nucleotide sequences of
144 clones positive for ITS1 specific for each species were obtained by Sanger sequencing. DNA
145 Sequences were analyzed using CLC Genome WorkBench v22.02 (Qiagen, Redwood City, CA).

146 Phylogenetic analysis was performed using Molecular Evolutionary Genetic Analysis
147 (MEGA) 11 (Tamura et al. 2021) based on a multiple sequence alignment of the ITS1 region
148 from *H. armigera*, *H. zea,* and *H. assulta* (Guenée) (KT342378.1, KT343380.1, and
149 KT343379.1, respectively), and our Sanger read data for Olathe, CO, individual 61e.
150 Relationships were estimated using the Maximum Likelihood (ML) method (Nei and Kumar
151 2000, Beerli and Felsenstein 2001) applying the Kimura-2-Parameter model of sequence
152 evolution (Kimura 1980), that implemented a discrete Gamma shape parameter and node support
153 inferred from 10,000 bootstrap pseudo replications (Felsenstein 1985) of the aligned data. The
154 tree was rooted by the *Chloridea* (*Heliothis*) *virescens* (Fabricius) ITS1 (GenBank accession
155 KT342279.1)

156 A short fragment of the cytochrome P450 337B3 (CYP337B3) gene was amplified from
157 Olathe, CO, Texas and Mississippi samples using gene-specific primers 3713CYP337B3F and
158 3714CYP337B3R (**Table 1**) following the protocol described in Joußen et al. (2012). Briefly, the
159 25µl amplification reactions contained 1x standard Taq polymerase buffer (10 mM Tris-HCl, 50

160 mM KCl, pH 8.3) (New England Biolabs, Ipswich, MA), 2.5 mM $MgCl_2$, 0.4 μM dNTP mix, 0.4
161 μM of each primer, and 0.025 units of Taq polymerase. A thermal cycling profile with a 15 s
162 initial denaturation step at 95 °C, 35 cycles of 10 s denaturation at 95 °C, 10 s annealing at 53
163 °C, an extension of 30 sec at 72 °C followed by a final extension of 5 min at 72 °C.

164 Amplicons were resolved by 1.0% agarose gel electrophoresis to identify insects positive
165 for the CYP337B3 gene. For each insect identified as positive for CYP337B3, the full-length
166 CYP337B3 gene was then amplified with primers 4268CYP337B3F and 4269CYP337B1_B3R.
167 PCR amplification reaction and thermal cycling parameters were the same as those used for
168 amplification of the short fragment of CYP337B3, except for an annealing temperature of 50 °C
169 and extension time increased to 2.75 min. Amplicons were purified using AmPure XP beads
170 (Beckman Coulter) prior to use in sequencing reactions. Barcoded Oxford Nanopore libraries
171 were constructed and sequenced as described above for full-length CYP337B3 gene sequences
172 from 143 insects. CYP337B3 allele versions v1 through v8 (JQ995292.1, KJ636466.1,
173 KM675665.1, KM675666.1, KX958388.1, KX958389.1, KX958390.1, and KX958391.1,
174 respectively), CYP337B1v1, and CYP337B2v2 (JQ995291) were used as references for
175 subsequent alignment of Oxford Nanopore amplicon sequences. Evolutionary relationships of
176 the CYP337B3 alleles from Olathe, CO population and previously published CYP337B genes
177 was inferred in an ML tree constructed using MEGA 11 as described above.

178 The CYP337B1 and CYP337B2 genes were subsequently PCR amplified from all
179 CYP337B3 positive DNA samples in reactions with the primers for CYP337B1 and CYP337B2
180 genes using the primer pairs 3709CYP337B1F/3710CYP337B1R and
181 3711CYP337B2F/3712CYP337B2R, respectively (Table 1). PCR conditions for amplification of

182 CYP337B1 and CYP337B2 were identical to those used to amplify the CYP337B3 gene, and
183 resulting amplicons were resolved by electrophoresis in 1.0% agarose gels.

184 **Results**

185 Initial screening of 1618 insects collected from Olathe, CO in 2023 occurred within 82 pools by
186 PCR with *H. armigera*-specific ITS1 primers, where an amplicon was generated from a single
187 pool, pool 61. This indicated at least one *H. armigera* or a hybrid insect in pool 61 carried an *H.*
188 *armigera* ITS1 region sequence. In contrast, none were detected in the Texas or Mississippi
189 samples collected in 2006. Analysis of Oxford Nanopore sequence data from pool 61 also
190 identified ITS1 sequences closely resembling *H. armigera* ITS1. Screening of DNA from
191 individual insects from pool 61 identified one insect (61e) from which both *H. armigera*- and *H.*
192 *zea*-specific ITS1 amplicons were produced. Subsequent alignment found that the ribosomal
193 RNA (rRNA) gene sequence of insect 61e contained both *H. zea* rRNA repeats and a variant of
194 *H. armigera* rRNA repeats. Specifically, this was shown from Oxford Nanopore sequencing and
195 Sanger sequencing of cloned full-length ITS1 PCR products from 61e (**Fig. 1**) where
196 insertion/deletion (indel) mutations were shown in the *H. armigera* compared to *H. zea* ITS1
197 references sequences at positions 138-167, 401-403, and 431-433. Sequence data from sample
198 61e showed two variants, with indels in each identical to respective *H. armigera*- and H. zea
199 ITS1 reference sequences. However, there were 23 single nucleotide polymorphisms in the *H.*
200 *armigera*-like ITS1 sequence from sample 61e that were identical to the *H. zea* ITS1 reference.
201 Phylogenetic reconstruction of ITS1 region showed clustering of the two ITS region variants
202 from Olathe, CO individual 61e with corresponding *H. armigera* (KT342378.1) and *H. zea*
203 references (KT343380.1; **Fig. 2**). ITS1 nucleotide sequences from the Olathe, CO sample 61e

204 were deposited in the GenBank database under accession numbers PP456864.1
205 (Olathe_61e_Ha_ITS1), and PP456865.1 (Olathe_61e_Hz_ITS1).

206 Ribosomal RNA units in eukaryotes are arranged as head-to-tail tandem repeats at one or
207 more loci (Nei and Rooney 2005, Naidoo et al. 2013). One study indicated that the rRNA gene
208 copy number in animals is highly variable, ranging from 39 in the mosquito *Sabethes cyaneus*
209 (Fabricius) to 19,300 in the salamander *Amphiuma means* Garden in Smith (Prokopowich et al.
210 2003). Although precise copy number estimates are not available for noctuid moths, the silk
211 moth *Bombyx mori* (L.) has approximately 240 copies of rRNA genes (Prokopowich et al. 2003).
212 In the reference *H. zea* genome assembly, ilHelZeax1.1 (RefSeq assembly GCF_022581195.2;
213 (Stahlke et al. 2023), BioProject: PRJNA818699), one complete set of rRNA repeats and one
214 18S rRNA subunit are annotated at one end of the chromosome 30 (Accession: NC_061481.1;
215 XR_006986104.1, XR_006986099.1, and XR_006986099.1). Similarly, one rRNA repeat unit is
216 annotated at one end of chromosome 30 in *H. armigera* (Accession: OZ005796.1; BioProject:
217 PRJEB72184). Collapse of identical rRNA repeat units during the assembly of the genome may
218 have reduced the number of repeats in the final assembly.

219 Tandem CYP337B genes (paralogs) are located in chromosome 2 of the *H.* zea reference
220 genome (Stahlke et al. 2023) and the orthologous chromosome 15 of the *H. armigera* genome
221 (Zhang et al. 2022). Different alleles of CYP337B3 resulted from independent recombination
222 events that joined exon 1 of the CYP337B2 gene with exon 2 of the CYP337B1 gene (Joußen et
223 al. 2012, Rasool et al. 2014, Walsh et al. 2018) (**Supp. Fig. S2a**). Therefore, wild-type tandem
224 genes CYP337B1 and CYP337B2 and recombinant CYP337B3 genes in *H. zea* can occur in five
225 different genotypic configurations: homozygous *H. zea* CYP337B1/CYP337B2 genes (**Supp.
226 Fig. S2b**), heterozygous *H. armigera* and *H. zea* CYP337B1/CYP337B2 genes (**Supp. Fig. S2c**),

227 hemizygous *H. armigera* CYP337B1/CYP337B2 and CYP337B3 genes (**Supp. Fig. S2d**),
228 hemizygous *H. zea* CYP337B1/CYP337B2 and CYP337B3 genes (**Supp. Fig. S2e**), and
229 homozygous CYP337B3 genes (**Supp. Fig. S2f**). Insects homozygous or hemizygous for
230 introgressed CYP337B3 gene can be identified using gene-specific primers (Joußen et al. 2012).
231 PCR screening of insects from the Olathe, CO, collection from 2023 with primers
232 3713CYP337B3F and 3714CYP337B3R identified 243 of 850 (28.6%) as PCR positive and
233 carrying at least one copy of a CYP337B3 gene. Screening all 243 samples positive for the
234 CYP337B3 gene with primers for CYP337B1 and CYP337B2 genes indicated that 12 samples
235 were negative for both wild-type genes and homozygous for the CYP337B3 gene. Remaining
236 insects were hemizygous with wild-type CYP337B1/CYP337B2 genes on one chromosome and
237 CYP337B3 gene on the other chromosome. Therefore, the overall allele frequency of CYP337B3
238 in Olathe, CO, population of *H. zea* estimated from 12 homozygous and 231 hemizygous insects
239 was 0.15 (255/1700). The estimated frequencies of CYP337B3 homozygotes, hemizygotes, and
240 wild-type homozygotes in the Olathe, CO, population were 0.0225, 0.2550, and 0.7225,
241 respectively. The observed frequency of CYP337B3 homozygotes (0.0141) was less than the
242 expectation under the Hardy-Weinberg equilibrium whereas the observed frequency of
243 hemizygotes was higher.

244 None of the samples in our study from Texas or Mississippi collected in 2006 generated
245 amplicons for the *H. armigera* CYP337B3 gene. Oxford Nanopore sequencing and mapping of
246 individual reads from 113 full-length amplicons and 28 short amplicons from 141 CYP337B3
247 positive insects from Olathe, CO, predicted 100 and 99.3% nucleotide identity to the reference
248 genomic sequences of CYP337B3 alleles v2 (KJ636466.1) and v6 (KX 958389.1), respectively.
249 The subsequent consensus built from mapped reads (coverage > 200-fold) indicated that

250 CYP337B3 alleles v2 (accession#: PP461124) and v6 (accession#: PP461125) were present
251 among individuals from Olathe, CO. Approximately 26.9% of the analyzed samples (38 out of
252 141) had CYP337B3v6 while the remaining were from the CYP337B3v2 allele.

253 Four of the samples identified with the CYP337B3v2 allele also contained 5.3 to 7.6%
254 Oxford Nanopore sequence reads that mapped to the CYP337B3v6 allele. The percentages of
255 CYP337B3v6 reads identified in these four samples were significantly lower than the 50% reads
256 expected from a heterozygous genotype with v2 and v6 alleles. Whether these reads resulted
257 from cross-contamination of samples during collection in traps and shipping in bags as bulk
258 samples, errors in base calling of barcodes during Nanopore sequencing, or PCR bias is
259 unknown.

260 Alignment of the mRNA and genomic sequences of CYP337B1v1, CYP337B2v2, and
261 CYP337B3 alleles v1-v8, including two consensus CYP337B3v2 and CYP337B3v6 alleles
262 sequences found in the Olathe, CO, showed Olathe CYP337B3v2 genomic and mRNA
263 nucleotide sequences were nearly 100% identical to the reference CYP337B3v2 (KJ636466.1)
264 sequence (**Supp. Figs. S3 and S4**). Specifically, there was one synonymous T to C substitution
265 in the coding regions between the reference CYP337B3v2 allele (KJ636466.1) and the
266 CYP337B3v2 gene variant present in the Olathe, CO population (**Supp. Fig. S5**). Alignments
267 also showed that CYP337B3v6 genomic DNA and mRNA sequences were 99.4% and 98.9%
268 identical to the reference CYP337B3v6 (KX 958389.1) allele, respectively. There were 16 SNPs
269 between the reference CYP337B3v6 allele from Uganda (KX958389.1) and the v6 allele variant
270 found in Olathe, CO (**Supp. Fig. S6**), but only a single mutation, an A to T transversion at the
271 nucleotide position 232, resulted in a conservative isoleucine to leucine substitution at the amino
272 acid position 78 (I78L). The consensus ML tree indicated that predicted CYP337B3v2 and v6

alleles from the Olathe, CO population clustered with corresponding reference alleles with node support from ≥ 99% of the bootstrap iterations (**Fig. 3**).

Discussion

The chimeric CYP337B3 gene associated with the functional cause of pyrethroid resistance in *H. armigera* evolved from an unequal crossover between paralogs CYP337B1 and CYP337B2 and had not evolved natively in *H. armigera* (Joußen et al. 2012, Rasool et al. 2014). The *H. armigera* CYP337B3 gene confers resistance to class II pyrethroid insecticides, including cypermethrin, deltamethrin, and fenvalerate (Rasool et al. 2014, Durigan et al. 2017). Evidence of hybridization between invasive *H. armigera* and native *H. zea* was previously reported in South America (Tay et al. 2013, Anderson et al. 2018), wherein the introgression of CYP337B3 into sympatric populations was detected (Valencia-Montoya et al. 2020, Ivey and Hillier 2023). The initial report of hybridization in North America detected CYP337B3 in two *H. zea* collected in Texas in 2019 that had no described or documented history of pyrethroid exposures (North et al. 2024). In this study, we found that approximately 28.6% of the adult *H. zea* collected in 2023 near Olathe, CO, where repeated pyrethroid applications by growers failed to control larval feeding damage to sweetcorn during the same growing season, carried one of two different alleles, CYP337B3v2 or CYP337B3v6, at the CYP337B3 locus. This CYP337B locus of *H. armigera* exists in homozygous, heterozygous, and hemizygous states for the CYP337B1/CYP337B2 pair and recombinant CYP337B3 (Walsh et al. 2018). Invasive *H. armigera* populations in the Americas may have contributed recombinant CYP337B3 to *H. zea* (Valencia-Montoya et al. 2020, North et al. 2024), which is detectable using a gene- and species-specific marker (Joußen et al. 2012). However, *H. armigera*-derived CYP337B1/CYP337B2 cannot be detected in hybrid *H. zea* using the PCR screening methods in this or prior studies.

296 Evaluation remains limited to detecting alleles of hybrid *Helicoverpa* via the CYP337B3 gene
297 and thus possibly underestimates the proportion of introgression. Out of 243 insects identified to
298 be positive for the CYP337B3 gene, only 12 were homozygous, and the remaining insects were
299 hemizygous at the CYP337B locus with wild-type CYP337B1/CYP337B2 gene pair from *H. zea*
300 or *H. armigera*.

301 Reference *H. zea* populations from Texas and Mississippi collected in 2006 prior to the
302 documented *H. armigera* invasion of South America in 2013 or North America in 2019 (North et
303 al. 2024, USDA-APHIS 2024) did not contain the CYP337B3 gene. Our results thus suggest that
304 the *H. armigera* invasion into the United States occurred after 2006 or was previously
305 undetectable due to low frequency during its initial establishment. Regardless, a more
306 comprehensive spatial and temporal screening of archived samples would be needed to
307 approximate the time(s) and the location(s) of the introduction. Previous population genetic
308 studies postulated that the CYP337B3 locus may be under strong selection in Brazil due to the
309 association between the high frequency of this gene and failures of pyrethroid insecticides to
310 control damage among field populations (Durigan et al. 2017, Valencia-Montoya et al. 2020).
311 Pyrethroid resistance due to knock-down resistance (*kdr*) mutations in the voltage-gated sodium
312 channel (*vgsc*) and significantly increased expression of cytochrome P450 6B (*cyp6b*) genes was
313 previously reported in the *H. zea* populations in the USA (Pietrantonio et al. 2007, Hopkins and
314 Pietrantonio 2010, Hopkins et al. 2011). In contrast, *kdr* mutations were not reported among
315 pyrethroid-resistant *H. armigera* populations in China, whereas the CYP337B3 gene was fixed
316 among all samples tested (Ni et al. 2023).

317 The above lines of evidence, along with introgression of genome regions flanking
318 CYP337B (Durigan et al. 2017, Valencia-Montoya et al. 2020, North et al. 2023), support the

premise that the chimeric CYP337B3 detected in the Americas originated from invasive *H. armigera*. Olathe is in western Colorado, where a discontinuous cropping landscape, punctuated by expanses of non-arable land and high mountain elevations, exists. Thus, the detection of the *H. armigera* CYP337B3 in *H. zea* from such remote and isolated fields may be considered not surprising even given the known mobility (Westbrook and López 2010, Jones et al. 2019) and high gene flow of *H. zea* within the continent (Seymour et al. 2016, Perera et al. 2020). Our findings, along with that of two hybrid *H. zea* with the CYP337B3 gene found in samples collected in 2019 from Texas (North et al. 2023) and the dispersal behavior of this species might suggest hybrids exist in the regions of the southwestern United States. CYP337B3-positive insects identified in samples collected in New York, Texas, and Virginia from 2016 to 2023 (Perera, unpublished) most likely indicate the presence of hybrid *H. zea* with genes introgressed from *H. armigera* within the continent. Instance of continuous and repeated use of pyrethroid insecticides in the United States could provide high selection pressures, as previously hypothesized in South America, to facilitate adaptive introgression of the CYP337B3 gene (Durigan et al. 2017, Valencia-Montoya et al. 2020). Such a scenario might lead to transient increases in CYP337B3 frequency among local populations that could become homogenized due to high gene flow in the *H. zea* population. This admixture of locally adapted phenotypes may effectively remediate impacts on agricultural production practices through an overall reduction in resistance allele frequency in a landscape if persistent and widespread selective pressure is lacking or contributes to the spread and accumulation of resistance across the population. The latter possible outcome would depend on the prevalence of pyrethroid use by growers, be modulated by the implementation of integrated pest management (IPM) practices, and be impacted by the interaction of ecological, genetic, and other factors. Furthermore, pyrethroid

342 resistance developed previously among *H. zea* in the United States (Abd-Elghafar et al. 1993,
343 Jacobson et al. 2009) prior to this recent introgression of CYP337B3. Thus, evaluating
344 phenotypic levels of pyrethroid resistance conferred by *H. zea kdr* and CYP6B mechanisms
345 compared to those by *H. armigera*-derived CYP337B3 alleles may provide an estimate of any
346 selective advantages attained by introgression. Regardless, in contrast to adaptive introgression
347 resulting in the transfer of locally adapted alleles from indigenous populations of genetically-
348 compatible species to invasive species (Edelman and Mallet 2021, Jin et al. 2023), our results
349 and prior evidence suggest the reverse scenario exists in *Helicoverpa* due to the influence of
350 selection by pyrethroid insecticide use.

351 It was postulated that all allelic variants of CYP337B3 formed independently in different
352 geographic regions (Walsh et al. 2018). In Olathe, CO, population, the CYP337B3v2 allele was
353 present in 73.1% of the hybrid insects, while the remaining hybrid insects had the CYP337B3 v6
354 allele. The high-throughput sequencing of CYP337B3 amplicons interestingly did not indicate
355 the presence of CYP337B3v2/CYP337B3v6 heterozygotes among all 141 samples sequenced.
356 Assuming the increase in metabolic capacity of homozygotes, the high prevalence of these
357 alleles may be anticipated at locations such as Olathe, CO, where selection pressure was imposed
358 following repeated exposures to pyrethroid applications. Regardless, mating between lineages
359 carrying different haplotypes at the CYP337B3 locus would predict the formation of
360 heterozygotes in the population unless admixture is suppressed due to recency of contact or yet
361 undescribed barriers to gene flow exist. Our data indicate that the frequency of observed
362 homozygotes is less than the estimated homozygote frequency. Additional research will be
363 necessary to understand the fitness of different configurations of CYP337B genotypes.

364 The CYP337B3v2 allele was first reported in Pakistan and associated with an
365 approximately 7-fold increase in resistance to cypermethrin (Rasool et al. 2014), and
366 subsequently in Australia, China, and the African and European continents (Han et al. 2015,
367 Walsh et al. 2018). In contrast, the CYP337v6 allele has only thus far been reported in Uganda
368 (Walsh et al. 2018), and further description of any pyrethroid resistance phenotype it confers is
369 currently lacking. In a previous study of *Helicoverpa*, almost all *H. armigera* analyzed from
370 Brazil (n = 92) were reported homozygous for the CYP337B3v2 allele. At the same time, one
371 insect was heterozygous for CYP337B3v2/ CYP337B3v5 alleles and found one of 59 *H. zea*
372 carried the CYP337B3v2 allele (Walsh et al. 2018). Thus, the source population(s) for the
373 introgressed CYP337B3v2 allele in Olathe, CO may be the South American *H. armigera* or
374 hybrid *H. zea-armigera* populations that migrated or were transported northward, but an
375 independent introduction source of CYP337B3 into North America cannot be ruled out.

376 Our study is the first to report the African-derived CYP337B3v6 allele in the Americas,
377 providing evidence that a proportion of individuals in the Olathe population may be derived
378 directly or indirectly from an African source population. It is possible that previous studies on
379 South American populations of *H. zea* did not detect this allele due to very low frequencies on
380 that continent. However, it should be noted that 26.9% of the CYP337B3 alleles observed in this
381 study were CYP337B3v6 alleles, but this higher frequency could have resulted from genetic drift
382 following a genetic bottleneck or selection upon introduction to North America. Therefore, it is
383 not possible to determine if this allele was introduced directly from an African or South
384 American population until additional genomic data are obtained. Although the point source(s) of
385 the CYP337B3 alleles detected in Olathe, CO remains uncertain, a comparison of CYP337B3
386 flanking genomic regions between Olathe, CO and prior introgressed hybrids detected in North

387 America (North et al. 2024) or *H. armigera* detected near O'Hare airport (USDA-APHIS 2024)
388 might provide for such prediction. The sixteen nucleotide substitutions present between the
389 CYP337B3v6 allele from Olathe, CO, and the v6 allele from Uganda may also point to an origin
390 other than the African continent for CYP337B3v6 allele found in Olathe, CO. Although
391 conserved amino acid substitutions such as I78L found in CYP337B3v6 allele from Olathe, CO,
392 generally do not affect the function of a protein, alteration of function have been observed in
393 some isoleucine to leucine substitutions (Sitbon et al. 1991, Brown et al. 2002, Christoffers et al.
394 2002). Therefore, the implications of this I78L substitution on resistance to pyrethroids remain
395 unknown and in need of future empirical assessments. Nevertheless, the origins of two
396 CYP337B3 alleles detected among *H. zea* from Olathe, CO, in this study indicate that at least
397 two different hybridization events occurred between *H. armigera* and *H. zea* in the Americas,
398 and the CYP337B3v6 allele could represent the signature of one or more new *H. armigera*
399 introductions into the Americas.

400 The *H. armigera* rRNA ITS1 sequence identified in one insect (61e) in the Olathe, CO
401 population further confirms introgression from *H. armigera* into *H. zea* through hybridization.
402 We inferred that orthologous rRNA genes are located only in chromosome 30, because rRNA
403 genes are not found on other chromosomes in the genome assemblies of either *Helicoverpa*
404 species. It is conceivable that the crossover of orthologous chromosome regions in a hybrid
405 progeny of *H. zea* and *H. armigera* could result in the introgression of some of the rRNA repeats
406 into the *H. zea* genome. Regardless, several repetitive gene families in prokaryotes and
407 eukaryotes are known to undergo concerted evolution, which functions to limit variation between
408 repeat units (Coen et al. 1982, Mullins and Fultz 1989, Benedict et al. 1996, Liao 2000,
409 Bettencourt and Feder 2002, Rooney and Ward 2005, Peel et al. 2006, Ganley and Kobayashi

410 2007, Naidoo et al. 2013). This insect 61e may have had rRNA gene repeats introgressed from
411 *H. armigera* during a crossover event between *H. zea* and *H. armigera* haplotypes and in the
412 process of gene conversion and repeated backcrossing to *H. zea.* However, it is not possible to
413 determine the structure of the rRNA repeats in this insect and the origin of the sequences
414 resembling ITS1 of both *H. armigera* and *H. zea* without haplotype phased sequence data from
415 the segment of chromosome 30 containing the rRNA repeats. Concerted evolution would predict
416 that the single nucleotide polymorphisms (SNP) specific to *H. armigera* ITS1 or the *H. zea* ITS1
417 would be converted over time, and unconverted variants may thus be indicative of how recent
418 that introgression of the rRNA genes occurred. It should be noted that sample 61e was not
419 positive for the CYP337B3 gene, indicating it may have originated from a hybridization event
420 independent of those that led to the introgression of CYP337B1v2 and v6 alleles or the loci
421 segregated independently in the population as expected for genes that have no known level of
422 linkage disequilibrium. Thus, due to the lack of linkage between the ITS region and CYP337B
423 loci, recombination in a backcross likely disentangled these two *H. armigera*-derived loci.

424 Invasive species are a threat to agricultural production in the United States and
425 worldwide (Coates et al. 2015). A scenario of adaptive introgression facilitated by the transfer of
426 a novel gene from an invasive to a native insect, as predicted for the *Helicoverpa* pest complex,
427 provides a unique opportunity to study evolution and selection in real-time. Specifically, our
428 evidence supports the admixture of previously geographically distinct introgressed CYP337B3v2
429 and CYP337B3V6 alleles into a single population. However, any hybrid vigor or advantageous
430 phenotypic effects conferred by a unique combination of two pyrethroid resistance alleles in the
431 North American population remains to be determined. The prevalence of these alleles across the
432 continent remains unknown, high gene flow between North American *H. zea* populations (Perera

et al. 2020) predicts these genes could spread rapidly across the continent. The CYP337B3 gene is currently used as a genetic marker to indicate the extent of gene transfer between these two species but likely underestimates actual introgression rates due to inability to detect *H. armigera*-derived CYP337B1/CYP337B2 haplotypes. The transfer of other genes with selective advantage, such as those conferring resistance to *Bacillus thuringiensis* insecticidal proteins, remains undetermined. The overall impacts of genes derived from invasive *H. armigera* on grower production practices remain uncertain, but continued selection for pest adaptions to practices that rely on insecticidal agents may be predicted to drive introgression of associated resistance alleles into *H. zea*. This may necessitate the development of alternative management strategies and the adoption of IPM practices.

Declaration of interest

The authors declare that they have no known competing financial interests or personal relationships that could have appeared to influence the work reported in this paper.

References

Abd-Elghafar SF, Knowles CO, and Wall ML. 1993. Pyrethroid resistance in two field strains of *Helicoverpa zea* (Lepidoptera: Noctuidae). J. Econ. Entomol. 86: 1651-1655 https://doi.org/10.1093/jee/86.6.1651

Anderson CJ, Oakeshott JG, Tay WT, et al. 2018. Hybridization and gene flow in the mega-pest lineage of moth, *Helicoverpa*. Proc. Natl. Acad. Sci. USA 115: 5034-5039 https://doi.org/10.1073/pnas.1718831115

Arnemann JA, James WJ, Walsh TK, et al. 2016. Mitochondrial DNA COI characterization of *Helicoverpa armigera* (Lepidoptera: Noctuidae) from Paraguay and Uruguay. Genet. Mol. Res. 15 http://dx.doi.org/10.4238/gmr.15018292

Arnemann JA, Roxburgh S, Walsh T, et al. 2019. Multiple incursion pathways for *Helicoverpa armigera* in Brazil show its genetic diversity spreading in a connected world. Sci. Rep. 9: 19380 https://doi.org/10.1038/s41598-019-55919-9

Arnold ML and Martin NH. 2009. Adaptation by introgression. J. Biol. 8: 1-3 https://doi.org/10.1186/jbiol176

463 Beerli P and Felsenstein J. 2001. Maximum likelihood estimation of a migration matrix and effective
464 population sizes in n subpopulations by using a coalescent approach. Proc. Natl. Acad. Sci. USA
465 98: 4563-4568 https://doi.org/10.1073/pnas.081068098
466 Benedict M, Levine B, Ke Z, et al. 1996. Precise limitation of concerted evolution to ORFs in mosquito
467 Hsp82 genes. Insect Mol. Biol. 5: 73-79 https://doi.org/10.1111/j.1365-2583.1996.tb00042.x
468 Bettencourt BR and Feder ME. 2002. Rapid concerted evolution via gene conversion at the *Drosophila*
469 hsp70 genes. J. Mol. Evol. 54: 569-586 https://doi.org/10.1007/s00239-001-0044-7
470 Brown AC, Moss SR, Wilson ZA, and Field LM. 2002. An isoleucine to leucine substitution in the ACCase
471 of *Alopecurus myosuroides* (black-grass) is associated with resistance to the herbicide
472 sethoxydim. Pestic. Biochem. Phys. 72: 160-168 https://doi.org/10.1016/S0048-3575(02)00004-
473 4
474 Burgarella C, Barnaud A, Kane NA, et al. 2019. Adaptive introgression: an untapped evolutionary
475 mechanism for crop adaptation. Front. Plant Sci. 10: 4 https://doi.org/10.3389/fpls.2019.00004
476 Christoffers MJ, Berg ML, and Messersmith CG. 2002. An isoleucine to leucine mutation in acetyl-CoA
477 carboxylase confers herbicide resistance in wild oat. Genome 45: 1049-1056
478 https://doi.org/10.1139/g02-080
479 Coates BS, Poelchau M, Childers C, et al. 2015. Arthropod genomics research in the United States
480 Department of Agriculture-Agricultural Research Service: current impacts and future prospects.
481 Trends. Entomol. 11: 12-27
482 Coen E, Strachan T, and Dover G. 1982. Dynamics of concerted evolution of ribosomal DNA and histone
483 gene families in the melanogaster species subgroup of *Drosophila*. J. Mol. Biol. 158: 17-35
484 https://doi.org/10.1016/0022-2836(82)90448-X
485 Colautti RI, Alexander JM, Dlugosch KM, et al. 2017. Invasions and extinctions through the looking glass
486 of evolutionary ecology. Philos. T. Roy. Soc. B. 372: 20160031
487 https://doi.org/10.1098/rstb.2016.0031
488 Czepak C, Albernaz KC, Vivan LM, et al. 2013. First reported occurrence of *Helicoverpa armigera*
489 (Hübner)(Lepidoptera: Noctuidae) in Brazil. Pesqui. Agropecu. Trop. 43: 110-113
490 https://doi.org/10.1590/S1983-40632013000100015
491 Durigan MR, Correa AS, Pereira RM, et al. 2017. High frequency of CYP337B3 gene associated with
492 control failures of *Helicoverpa armigera* with pyrethroid insecticides in Brazil. Pestic. Biochem.
493 Physiol. 143: 73-80 https://doi.org/10.1016/j.pestbp.2017.09.005
494 Edelman NB and Mallet J. 2021. Prevalence and adaptive impact of introgression. Annu. Rev. Genet. 55:
495 265-283 https://doi.org/10.1146/annurev-genet-021821-020805
496 Felsenstein J. 1985. Confidence limits on phylogenies: an approach using the bootstrap. Evolution 39:
497 783-791 https://doi.org/10.2307/2408678
498 Fitt GP. 1989. The ecology o*f Heliothis* Species in relation to agroecosystems. Annu. Rev. Entomol. 34:
499 17-53 https://doi.org/10.1146/annurev.en.34.010189.000313
500 Ganley AR and Kobayashi T. 2007. Highly efficient concerted evolution in the ribosomal DNA repeats:
501 total rDNA repeat variation revealed by whole-genome shotgun sequence data. Genome Res.
502 17: 184-191 https://doi.org/10.1101/gr.5457707
503 Han Y, Yu W, Zhang W, et al. 2015. Variation in P450-mediated fenvalerate resistance levels is not
504 correlated with CYP337B3 genotype in Chinese populations of *Helicoverpa armigera*. Pestic.
505 Biochem. Physiol. 121: 129-135 10.1016/j.pestbp.2014.12.004
506 Hayden J and Brambila J. 2015. Pest alert: *Helicoverpa armigera* (Lepidoptera: Noctuidae), the old world
507 bollworm. Florida Department of Agriculture and Consumer Services. 2015 Jun 17.
508 Hopkins BW and Pietrantonio PV. 2010. The *Helicoverpa zea* (Boddie) (Lepidoptera: Noctuidae) voltage-
509 gated sodium channel and mutations associated with pyrethroid resistance in field-collected
510 adult males. Insect Biochem. Mol. Biol. 40: 385-393 https://doi.org/10.1016/j.ibmb.2010.03.004

511 Hopkins BW, Longnecker MT, and Pietrantonio PV. 2011. Transcriptional overexpression of
512 CYP6B8/CYP6B28 and CYP6B9 is a mechanism associated with cypermethrin survivorship in
513 field-collected *Helicoverpa zea* (Lepidoptera: Noctuidae) moths. Pest Manag. Sci. 67: 21-25
514 https://doi.org/10.1002/ps.2034
515 Ivey V and Hillier NK. 2023. Hybridization in heliothine moths: impacts on reproduction, pheromone
516 communication, and pest management. Front. Ecol. Evol. 11
517 https://doi.org/10.3389/fevo.2023.1208079
518 Jacobson A, Foster R, Krupke C, et al. 2009. Resistance to Pyrethroid Insecticides in *Helicoverpa zea*
519 (Lepidoptera: Noctuidae) in Indiana and Illinois. J. Econ. Entomol. 102: 2289-2295
520 https://doi.org/10.1603/029.102.0634
521 Jaspers C, Ehrlich M, Pujolar JM, et al. 2021. Invasion genomics uncover contrasting scenarios of genetic
522 diversity in a widespread marine invader. Proc. Natl. Acad. Sci. USA 118: e2116211118
523 https://doi.org/10.1073/pnas.211621111
524 Jin M, North HL, Peng Y, et al. 2023. Adaptive evolution to the natural and anthropogenic environment
525 in a global invasive crop pest, the cotton bollworm. The Innovation 4
526 https://doi.org/10.1016/j.xinn.2023.10045
527 Jones CM, Parry H, Tay WT, et al. 2019. Movement ecology of pest *Helicoverpa*: implications for ongoing
528 spread. Annu. Rev. Entomol. 64: 277-295 https://doi.org/10.1146/annurev-ento-011118-111959
529 Joußen N, Agnolet S, Lorenz S, et al. 2012. Resistance of Australian *Helicoverpa armigera* to fenvalerate
530 is due to the chimeric P450 enzyme CYP337B3. Proc. Natl. Acad. Sci. USA 109: 15206-15211
531 https://doi.org/10.1073/pnas.1202047109
532 Kimura M. 1980. A simple method for estimating evolutionary rates of base substitutions through
533 comparative studies of nucleotide sequences. J. Mol. Evol. 16: 111-120
534 https://doi.org/10.1007/BF01731581
535 Kitching I and Rawlins J. 1998. The Noctuoidea, pp. 355-401. In Kristensen NP (ed.), Lepidoptera: moths
536 and butterflies. Walter de Gruyter, New York, NY.
537 Kriticos DJ, Ota N, Hutchison WD, et al. 2015. The potential distribution of invading *Helicoverpa*
538 *armigera* in North America: is it just a matter of time? PloS one 10: e0119618
539 https://doi.org/10.1371/journal.pone.0119618
540 Laster ML and Sheng CF. 1995. Search for hybrid sterility for *Helicoverpa zea* in crosses between the
541 North American *H*. *zea* and *H*. *armigera* (Lepidoptera: Noctuidae) from China. J. Econ. Entomol.
542 88: 1288-1291 https://doi.org/10.1093/jee/88.5.1288
543 Liao D. 2000. Gene conversion drives within genic sequences: concerted evolution of ribosomal RNA
544 genes in bacteria and archaea. J. Mol. Evol. 51: 305-317
545 https://doi.org/10.1007/s002390010093
546 Mullins J and Fultz P. 1989. Evidence for biased gene conversion in concerted evolution of ribosomal
547 DNA. Science 246: 1614 https://dpoi.org/10.1126/science.1987647
548 Naidoo K, Steenkamp ET, Coetzee MP, et al. 2013. Concerted evolution in the ribosomal RNA cistron.
549 PloS one 8: e59355 https://doi.org/10.1371/journal.pone.0059355
550 Nei M and Kumar S. 2000. Molecular evolution and phylogenetics, New York, NY Oxford University Press,
551 USA
552 Nei M and Rooney AP. 2005. Concerted and birth-and-death evolution of multigene families. Annu. Rev.
553 Genet. 39: 121-152 https://doi.org/10.1146/annurev.genet.39.073003.112240
554 Ni R, Wang Y, Zhong Q, et al. 2023. Absence of known knockdown resistance mutations but fixation of
555 CYP337B3 was detected in field populations of *Helicoverpa armigera* across China. Pestic.
556 Biochem. Phys. 195: 105542 https://doi.org/10.1016/j.pestbp.2023.105542

557 North HL, Fu Z, Metz R, et al. 2024. Rapid adaptation and interspecific introgression in the North
558 American crop pest *Helicoverpa zea*. Mol. Biol. Evol. 41: msae129
559 https://doi.org/10.1093/molbev/msae129
560 Peel AD, Telford MJ, and Akam M. 2006. The evolution of hexapod engrailed-family genes: evidence for
561 conservation and concerted evolution. P. Roy. Soc. B-Biol. Sci. 273: 1733-1742
562 https://doi.org/10.1098/rspb.2006.3497
563 Perera OP, Fescemyer HW, Fleischer SJ, and Abel CA. 2020. Temporal variation in genetic composition of
564 migratory *Helicoverpa zea* in peripheral populations. Insects 11
565 https://doi.org/10.3390/insects11080463
566 Perera OP, Allen KC, Jain D, et al. 2015. Rapid identification of *Helicoverpa armigera* and *Helicoverpa zea*
567 (Lepidoptera: Noctuidae) using ribosomal RNA internal transcribed spacer 1. J. Insect Sci. 15: 155
568 https://doi.org/10.1093/jisesa/iev137
569 Pietrantonio P, Junek T, Parker R, et al. 2007. Detection and evolution of resistance to the pyrethroid
570 cypermethrin in *Helicoverpa zea* (Lepidoptera: Noctuidae) populations in Texas. Environ.
571 Entomol. 36: 1174-1188 https://doi.org/10.1603/0046-225X(2007)36[1174:DAEORT]2.0.CO;2
572 Pouge M. 2004. A new synonym of *Helicoverpa zea* (Boddie) and differentiation of adult males of *H. zea*
573 and *H. armigera* (Hubner) (Lepidoptera: Noctuidae: Heliothinae). Ann. Entomol. Soc. Am. 97:
574 1222-1226 https://doi.org/10.1603/0013-8746(2004)097[1222:ANSOHZ]2.0.CO;2
575 Prokopowich CD, Gregory TR, and Crease TJ. 2003. The correlation between rDNA copy number and
576 genome size in eukaryotes. Genome 46: 48-50 https://doi.org/10.1139/g02-103
577 Rasool A, Joußen N, Lorenz S, et al. 2014. An independent occurrence of the chimeric P450 enzyme
578 CYP337B3 of *Helicoverpa armigera* confers cypermethrin resistance in Pakistan. Insect Biochem.
579 Mol. Biol. 53: 54-65 https://doi.org/10.1016/j.ibmb.2014.07.006
580 Reay-Jones FPF. 2019. Pest status and management of corn earworm (Lepidoptera: Noctuidae) in field
581 corn in the United States. J. Integr. Pest Manag. 10: 19 https://doi.org/10.1093/jipm/pmz017
582 Riaz S, Johnson JB, Ahmad M, et al. 2021. A review on biological interactions and management of the
583 cotton bollworm, *Helicoverpa armigera* (Lepidoptera: Noctuidae). J. Appl. Entomol. 145: 467-
584 498 https://doi.org/10.1111/jen.12880
585 Rooney AP and Ward TJ. 2005. Evolution of a large ribosomal RNA multigene family in filamentous fungi:
586 birth and death of a concerted evolution paradigm. Proc. Natl. Acad. Sci. USA 102: 5084-5089
587 https://doi.org/10.1073/pnas.0409689102
588 Seymour M, Perera OP, Fescemyer HW, et al. 2016. Peripheral genetic structure of *Helicoverpa zea*
589 indicates asymmetrical panmixia. Ecol. Evol. 6: 3198-3207 https://doi.org/10.1002/ece3.2106
590 Sitbon M, d'Auriol L, Ellerbrok H, et al. 1991. Substitution of leucine for isoleucine in a sequence highly
591 conserved among retroviral envelope surface glycoproteins attenuates the lytic effect of the
592 Friend murine leukemia virus. Proc. Natl. Acad. Sci. USA 88: 5932-5936
593 https://doi.org/10.1073/pnas.88.13.5932
594 Smith E. 2014. Detection of old world bollworm (*Helicoverpa armigera*) in Puerto Rico. North American
595 Plant Protection Organization, Phytosanitary Alert System Bulletin.
596 https://www.pestalerts.org/nappo/official-pest-reports/617/
597 Specht A, Sosa-Gómez DR, Paula-Moraes SV, and Yano SAC. 2013. Morphological and molecular
598 identification of *Helicoverpa armigera* (Lepidoptera: Noctuidae) and expansion of its occurrence
599 record in Brazil. Pesqui. Agropecu. Bras. 48: 689-692 https://doi.org/10.1590/S0100-
600 204X2013000600015
601 Stahlke AR, Chang J, Tembrock LR, et al. 2023. A chromosome-scale genome assembly of a *Helicoverpa*
602 *zea* strain resistant to *Bacillus thuringiensis* Cry1Ac insecticidal protein. Genome. Biol. Evol. 15
603 https://doi.org/10.1093/gbe/evac131

604 Tamura K, Stecher G, and Kumar S. 2021. MEGA11: Molecular evolutionary genetics analysis version 11.
605 Mol. Biol. Evol. 38: 3022-3027 https://doi.org/10.1093/molbev/msab120
606 Tay WT, Soria MF, Walsh T, et al. 2013. A brave new world for an old world pest: *Helicoverpa armigera*
607 (Lepidoptera: Noctuidae) in Brazil. PloS one 8: e80134
608 https://doi.org/10.1371/journal.pone.0080134
609 Tay WT, Walsh TK, Downes S, et al. 2017. Mitochondrial DNA and trade data support multiple origins of
610 *Helicoverpa armigera* (Lepidoptera, Noctuidae) in Brazil. Sci Rep 7: 45302 10.1038/srep45302
611 Tembrock LR, Timm AE, Zink FA, and Gilligan TM. 2019. Phylogeography of the recent expansion of
612 *Helicoverpa armigera* (Lepidoptera: Noctuidae) in South America and the Caribbean Basin. Ann.
613 Entomol. Soc. Am. 112: 388-401 https://doi.org/10.1093/aesa/saz019
614 Trujillo D, Mastrangelo T, Estevez de Jensen C, et al. 2024. Accurate identification of *Helicoverpa*
615 *armigera*/*Helicoverpa zea* hybrids using genome admixture analysis: implications for genomic
616 surveillance. Front. Insect Sci. 4: 1339143 https://doi.org/10.3389/finsc.2024.1339143
617 USDA-APHIS. 2024. The old world bollworm can cause damage to U.S. agriculture., pp. Last accessed
618 March 15, 2024. USDA APHIS https://www.aphis.usda.gov/aphis/resources/pests-
619 diseases/hungry-pests/the-threat/old-world-bollworm/owb.
620 Valencia-Montoya WA, Elfekih S, North HL, et al. 2020. Adaptive Introgression across semipermeable
621 species boundaries between local *Helicoverpa zea* and invasive *Helicoverpa armigera* moths.
622 Mol. Biol. Evol. 37: 2568-2583 https://doi.org/10.1093/molbev/msaa108
623 Venette RC and Hutchison WD. 2021. Invasive insect species: global challenges, strategies &
624 opportunities. Front. Insect Sci. 1: 650520 https://doi.org/10.3389/finsc.2021.650520
625 Walsh TK, Joußen N, Tian K, et al. 2018. Multiple recombination events between two cytochrome P450
626 loci contribute to global pyrethroid resistance in *Helicoverpa armigera*. PloS one 13: e0197760
627 https://doi.org/10.1371/journal.pone.0197760
628 Westbrook JK and López JD. 2010. Long-distance migration in *Helicoverpa zea*: what we know and need
629 to know. Southwest. Entomol. 35: 355-360 https://doi.org/10.3958/059.035.0315
630 Zhang J, Zhang F, Tay WT, et al. 2022. Population genomics provides insights into lineage divergence and
631 local adaptation within the cotton bollworm. Mol Ecol Resour 22: 1875-1891 10.1111/1755-
632 0998.13581

633

634

635

636

637

638

639

640

Table 1. Primers used in PCR amplification and nucleotide sequencing of ribosomal RNA internal transcribed spacer 1 and cytochrome P450 337B, CYP337B3, from *Helicoverpa* samples collected from Olathe, Colorado, USA.

Primer Name	Sequence (5' to 3	Gene	Reference
3373Ha_Hz_ITS1F	GAGGAAGTAAAAGTCGTAACAAGGTTTCC	ITS1 (rRNA)	(Perera, OP et al. 2015)
3374Ha_ITS1R	CGTTCGACTCTGTGTCCTCTAGTGG	ITS1 (rRNA)	(Perera, OP et al. 2015)
3377Hz_ITS1R	TTGATTGTTAACGAACGCGCCG	ITS1 (rRNA)	(Perera, OP et al. 2015)
310-18S-rDNA-2F	ATCATTTAGAGGAAGTAAAAGTCGTAACAAGGT	ITS1 (rRNA)	(Perera, OP et al. 2015)
312-5.8S-rDNA-R	GAARTGTCGATGTTCAAATGTGTCCTGC	ITS1 (rRNA)	(Perera, OP et al. 2015)
3709CYP337B1F	AATAATAAGCAACGCCAATGACTTAC	CYP337B1	(Joußen, N et al. 2012)
3710CYP337B1R	TGCAATAACAACTATTACATTTTGAATAAA	CYP337B1	(Joußen, N et al. 2012)
3711CYP337B2F	AATAATAACCAGTCCAAACGATGTGT	CYP337B2	(Joußen, N et al. 2012)
3712CYP337B2R	CGCAATTATAGTCACTATGATTGCATATA	CYP337B2	(Joußen, N et al. 2012)
3713CYP337B3F	AATAATAACCAGTCCAAACGATGTGT	CYP337B3	(Joußen, N et al. 2012)
3714CYP337B3R	TGCAATAACAACTATTACATTTTGAATAAA	CYP337B3	(Joußen, N et al. 2012)
4268CYP337B3F	ATGTTGTTCGTRATATTACTCACGA	CYP337B3	This study
4269CYP337B1_B3R	TTATATGTCTCTTAACTTTAATTCATAACGAG	CYP337B3	This study

```
                                   1                                                                                                                                                                                                                                                                                                                                                                                                                                                                                                                                                                                                                                                                                                                                                                                                                                                                                                                                                                                                                                                                                                                                                                                                                                                                                                                                                                                                                                                                                                                                                                                                                                                                                                                                                                                                                                                                                                                                                                                                                                                                                                                                                                                                                                                                                                                                                                                                                                                                                                                                                                                                                                                                                                                                                                                                                                                                                                                                                                                                                                                                                                                                                                                                                                                                                                                                                                                                                                                                                                                                                                                                                                                                                                                                                                                                                                                                                                                                                                                                                                                                                                                                                                                                                                                                                                                                                                                                                                                                                                                                                                                                                                                                                                                                                                                                                                                                                                                                                                                                                                                                                                                                                                                                                                                                                                                                                                                                                                                                                                                                                                                                                                                                                                                                                                                                                                                                                                                                                                                                                                                                                                                                                                                                                                                                                                                                                                                                                                                                                                                                                                                                                                                                                                                                                                                                                                                                                                                                                                                                                                                                                                                                                                                                                                                                                                                                                                                                                                                                                                                                                                                                                                                                                                                                                                                                                                                                                                                                                                                                                                                                                                                                                                                                                                                                                                                                                                                                                                                                                                                                                                                                                                                                                                                                                                                                                                                
Harm_ITS1_KT343378    (1) ATCATTTAGAGGAAGTAAAAGTCGTAACAAGGTTTCCGTAGGGGAACCTGCGGAAGGATC
Harm_ITS1_OP806113    (1) ATCATTTAGAGGAAGTAAAAGTCGTAACAAGGTTTCCGTAGGGGAACCTGCGGAAGGATC
Harm_ITS1_MW390823    (1) ATCATTTAGAGGAAGTAAAAGTCGTAACAAGGTTTCCGTAGGGGAACCTGCGGAAGGATC
Harm_ITS1_AB620127    (1) ---------------------------------TTTCCGTAGGGGAACCTGCGGAAGGATC
Harm_ITS1_OQ829604    (1) ATCATTTAGAGGAAGTAAAAGTCGTAACAAGGTTTCCGTAGGGGAACCTGCGGAAGGATC
Harm_ITS1_Olathe_61e  (1) ATCATTTAGAGGAAGTAAAAGTCGTAACAAGGTTTCCGTAGGGGAACCTGCGGAAGGATC
Hzea_ITS1_KT343380    (1) ATCATTTAGAGGAAGTAAAAGTCGTAACAAGGTTTCCGTAGGGGAACCTGCGGAAGGATC
Hzea_ITS1_OQ780392    (1) ----------------AAAGTCGTAACAAGGTTTCCGTAGGGGAACCTGCGGAAGGATC
Hzea_ITS1_Olathe_61e  (1) ATCATTTAGAGGAAGTAAAAGTCGTAACAAGGTTTCCGTAGGGGAACCTGCGGAAGGATC
                          61                                                                                                                                                                                                                                                                                                                                                                                                                                                                                                                                                                                                                                                                                                                                                                                                                                                                                                                                                                                                                                                                                                                                                                                                                                                                                                                                                                                                                                                                                                                                                                                                                                                                                                                                                                                                                                                                                                                                                                                                                                                                                                                                                                                                                                                                                                                                                                                                                                                                                                                                                                                                                                                                                                                                                                                                                                                                                                                                                                                                                                                                                                                                                                                                                                                                                                                                                                                                                                                                                                                                                                                                                                                                                                                                                                                                                                                                                                                                                                                                                                                                                                                                                                                                                                                                                                                                                                                                                                                                                                                                                                                                                                                                                                                                                                                                                                                                                                                                                                                                                                                                                                                                                                                                                                                                                                                                                                                                                                                                                                                                                                                                                                                                                                                                                                                                                                                                                                                                                                                                                                                                                                                                                                                                                                                                                                                                                                                                                                                                                                                                                                                                                                                                                                                                                                                                                                                                                                                                                                                                                                                                                                                                                                                                                                                                                                                                                                                                                                                                                                                                                                                                                                                                                                                                                                                                                                                                                                                                                                                                                                                                                                                                                                                                                                                                                                                                                                                                                                                                                                                                                                                                                                                                                                                                                                                                                                                                                                                                                                                                                                                                                                                                                                                                                                                                                                                                                                                                                                                
Harm_ITS1_KT343378   (61) ATTAACGTGTAAAGGCAAGACGCGACTGGCTCGCGACGCGCGTGTTATAACGTGAACAAT
Harm_ITS1_OP806113   (61) ATTAACGTGTAAAGGCAAGACGCGACTGGCTCGCGACGCGCGTGTTATAACGTGAACAAT
Harm_ITS1_MW390823   (61) ATTAACGTGTAAAGGCAAGACGCGACTGGCTCGCGACGCGCGTGTTATAACGTGAACAAT
Harm_ITS1_AB620127   (29) ATTA-CGTGTAA-GGCAAGACGCGACTGGCTCGCGACGCGCGTGTTATAACGTGAACAAT
Harm_ITS1_OQ829604   (61) ATTAACGTGTAAAGGCAAGACGCGACTGGCTCGCGACGCGCGTGTTATAACGTGAACAAT
Harm_ITS1_Olathe_61e (61) ATTAACGTGTAAAGGCAAGACGCGACTGGCTCGCGACGCGCGTGTTATAACGTGAACAAT
Hzea_ITS1_KT343380   (61) ATTAACGTGTAAAGGCAAGACGCGACTGGCTCGCGACGCGCGTGTTATAACGTGAACAAT
Hzea_ITS1_OQ780392   (44) ATTAACGTGTAAAGGCAAGACGCGACTGGCTCGCGACGCGCGTGTTATAACGTGAACAAT
Hzea_ITS1_Olathe_61e (61) ATTAACGTGTAAAGGCAAGACGCGACTGGCTCGCGACGCGCGTGTTATAACGTGAACAAT
                          121                                                                                                                                                                                                                                                                                                                                                                                                                                                                                                                                                                                                                                                                                                                                                                                                                                                                                                                                                                                                                                                                                                                                                                                                                                                                                                                                                                                                                                                                                                                                                                                                                                                                                                                                                                                                                                                                                                                                                                                                                                                                                                                                                                                                                                                                                                                                                                                                                                                                                                                                                                                                                                                                                                                                                                                                                                                                                                                                                                                                                                                                                                                                                                                                                                                                                                
Harm_ITS1_KT343378  (121) AATCCACAC-ACCA-------------------------------CTAGAGGACACAGAGTC
Harm_ITS1_OP806113  (121) AATCCACAC-ACCA-------------------------------CTAGAGGACACAGAGTC
Harm_ITS1_MW390823  (121) AATCCACAC-ACCA-------------------------------CTAGAGGACACAGAGTC
Harm_ITS1_AB620127   (87) AATCCACAC-ACCA-------------------------------CTAGAGGACACAGAGTC
Harm_ITS1_OQ829604  (121) AATCCACAC-ACCA-------------------------------CTAGAGGACACAGAGTC
Harm_ITS1_Olathe_61e (121) AATCCACAC-CACT-------------------------------CCAGAGGACACAGAGTC
Hzea_ITS1_KT343380  (121) AATCCACACCACTATGCGCATGCATATATTGCATCGCGCATATCCAGAGGACACAGAGTC
Hzea_ITS1_OQ780392  (104) AATCCACACCACTATGCGCATGCATATATTGCATCGCGCATATCCAGAGGACACAGAGTC
Hzea_ITS1_Olathe_61e (121) AATCCACACCACTATGCGCATGCATATATTGCATCGCGCATATCCAGAGGACACAGAGTC
                          181                                                                                                                                                                                                                                                                                                                                                                                                                                                                                                                                                                                                                                                                                                                                                                                                                                                                                                                                                                                                                                                                                                                                                                                                                                                                                                                                                                                                                                                                                                                                                                                                                                                                                                                                                                                                                                                                                                                                                                                                                                                                                                                                                                                                                                                                                                                                                                                                                                                                                                                                                                                                                                                                                                                                                                                                                                                                                                                                                                                                                                                                                                                                                                                                                                                                                                
Harm_ITS1_KT343378  (151) GAACGGACGCTGTGCGTTGAATGATAGCCGATGATTCGGTGTTGTTCGTCGCGCTCGTCC
Harm_ITS1_OP806113  (151) GAACGGACGCTGTGCGTTGAA---TAGCCGATGATTCGGTGTTGTTCGTCGCGCTCGTCC
Harm_ITS1_MW390823  (151) GAACGGACGCTGTGCGTTGAA---TAGCCGATGATTCGGTGTTGTTCGTCGCGCTCGTCC
Harm_ITS1_AB620127  (117) GAACGGACGCTGTGCGTTGAA---TAGCCGATGATTCGGTGTTGTTCGTCGCGCTCGTCC
Harm_ITS1_OQ829604  (151) GAACGGACGCTGTGCGTTGAA---TARCCGATGATTCGGTGTTGTTCGTCGCGCTCGTCC
Harm_ITS1_Olathe_61e (151) GG--GGACGCTGTGCGTTGAA---TAGCCGATGATTCGGTGTTGTTCGTCGCGCTCGTCC
Hzea_ITS1_KT343380  (181) GG--GGACGCTGTGCGTTGAA---TAGCCGATGATTCGGTGTTGTTCGTCGCGCTCGTCC
Hzea_ITS1_OQ780392  (164) GG--GGACGCTGTGCGTTGAA---TAGCCGATGATTCGGTGTTGTTCGTCGCGCTCGTCC
Hzea_ITS1_Olathe_61e (181) GG--GGACGCTGTGCGTTGAA---TAGCCGATGATTCGGTGTTGTTCGTCGCGCTCGTCC
                          241                                                                                                                                                                                                                                                                                                                                                                                                                                                                                                                                                                                                                                                                                                                                                                                                                                                                                                                                                                                                                                                                                                                                                                                                                                                                                                                                                                                                                                                                                                                                                                                                                                                                                                                                                                                                                                                                                                                                                                                                                                                                                                                                                                                                                                                                                                                                                                                                                                                                                                                                                                                                                                                                                                                                                                                                                                                                                                                                                                                                                                                                                                                                                                                                                                                                                                
Harm_ITS1_KT343378  (211) GTCGTTATGTGTTCTCGCGTCGCGTCATGCGCACGACACGCAGAAGGGTACAGAAAA-CA
Harm_ITS1_OP806113  (208) GTCGTTATGTGTTCTCGCGTCGCGTCATGCGCACGACACGCAGAAGGGTACAGAAAA-CA
Harm_ITS1_MW390823  (208) GTCGTTATGTGTTCTCGCGTCGCGTCATGCGCACGACACGCAGAAGGGTACAGAAAA-CA
Harm_ITS1_AB620127  (174) GTCGTTATGTGTTCTCGCGTCGCGTCATGCGCACGACACGCAGAAGGGTACAGAAAAACA
Harm_ITS1_OQ829604  (208) GTCGTTATGTGTTCTCGCGTCGCGTCATGCGCACGACACGCAGAAGGGTACAGAAAA-CA
Harm_ITS1_Olathe_61e (206) GTCGTTATGTGTTCTCGCGTCGCGTCATGCGCACGACACGCAGAAGGGTACAGAA--CA
Hzea_ITS1_KT343380  (236) GTCGTTATGTGTTCTCGCGTCGCGTCATGCGCACGACACGCAGAAGGGTACAGAA--CA
Hzea_ITS1_OQ780392  (219) GTCGTTATGTGTTCTCGCGTCGCGTCATGCGCACGACACGCAGAAGGGTACAGAA--CA
Hzea_ITS1_Olathe_61e (236) GTCGTTATGTGTTCTCGCGTCGCGTCATGCGCACGACACGCAGAAGGGTACAGAA--CA
                          301                                                                                                                                                                                                                                                                                                                                                                                                                                                                                                                                                                                                                                                                                                                                                                                                                                                                                                                                                                                                                                                                                                                                                                                                                                                                                                                                                                                                                                                                                                                                                                                                                                                                                                                                                                                                                                                                                                                                                                                                                                                                                                                                                                                                                                                                                                                                                                                                                                                                                                                                                                                                                                                                                                                                                
Harm_ITS1_KT343378  (270) CAAAAATCCGCGTCCCCGAGTGTCGGCATCGCGCGTTCGTTAACAATCAAACACAAGTC
Harm_ITS1_OP806113  (267) CAAAAATCCGCGTCCCCGAGTGTCGGCATCGCGCGTTCGTTAACAATCAAACACAAGTC
Harm_ITS1_MW390823  (267) CAAAAATCCGCGTCCCCGAGTGTCGGCATCGCGCGTTCGTTAACAATCAAACACAAGTC
Harm_ITS1_AB620127  (234) CAAAAATCCGCGTCCCCGAGTGTCGGCATCGCGCGTTCGTTAACAATCAAACACAAGTC
Harm_ITS1_OQ829604  (267) CAAAAATCCGCGTCCCCGAGTGTCGGCATCGCGCGTTCGTTAACAATCAAACACAAGTC
Harm_ITS1_Olathe_61e (263) CAAAAATCCGCGTCCCCGAGTGTCGGCATCGCGCGTTCGTTAACAATCAAACACAAGTC
Hzea_ITS1_KT343380  (293) CAAAAATCCGCGTCCCCGAGTGTCGGCATCGCGCGTTCGTTAACAATCAAACACAAGTC
Hzea_ITS1_OQ780392  (276) CAAAAATCCGCGTCCCCGAGTGTCGGCATCGCGCGTTCGTTAACAATCAAACACAAGTC
Hzea_ITS1_Olathe_61e (293) CAAAAATCCGCGTCCCCGAGTGTCGGCATCGCGCGTTCGTTAACAATCAAACACAAGTC
                          361                                                                                                                                                                                                                                                                                                                                                                                                                                                                                                                                                                                                                                                                                                                                                                                                                                                                                                                                                                                                                                                                                                                                                                                                                                                                                                                                                                                                                                                                                                                                                                                                                                                                                                                                                                                                                                                                                                                                                                                                                                                                                                                                                                                                                                                                                                                                                                                                                                                                                                                                                                                                                                                                                                                                                
Harm_ITS1_KT343378  (330) CCTTGCAACGCGGGGGATGATATCATTTTTTTTTTTTATAGATACAAACACGCGTGTATAT
Harm_ITS1_OP806113  (327) CCTTGCAACGCGGGGGATGATATCATTTTTTTTTTTTATAGATACAAACACGCGTGTATAT
Harm_ITS1_MW390823  (327) CCTTGCAACGCGGGGGATGATATCATTTTTTTTTTTTATAGATACAAACACGCGTGTATAT
Harm_ITS1_AB620127  (294) CCTTGCAACGCGGGGGATGATATCATTTTTTTTTTTTATAGATACAAACACGCGTGTATAT
Harm_ITS1_OQ829604  (327) CCTTGCAACGCGGGGGATGATATCATTTTTTTTTTTTATAGATACAAACACGCGTGTATAT
Harm_ITS1_Olathe_61e (322) CCTTGCAACGCGGGGGATGATATCATTTTTTTTTTTTATAGATACAAACACGCGTGTATAT
Hzea_ITS1_KT343380  (352) CCTTGCAACGCGGGGGATGATATCATTTTTTTTTTT---ATACAAACACGCGTGTATAT
Hzea_ITS1_OQ780392  (335) CCTTGCAACGCGGGGGATGATATCATTTTTTTTTTT---ATACAAACACGCGTGTATAT
Hzea_ITS1_Olathe_61e (352) CCTTGCAACGCGGGGGATGATATCATTTTTTTTTTT---ATACAAACACGCGTGTATAT
                          421                                                                                                                                                                                                                                                                                                                                                                                                                                                                                                                                                                                                                                                                                                                                                                                                                                                                                                                                                                                                                                                                                                                                                                                                                                                                                                                                                                                                                                                                                                                                                                                                                                                                                                                                                                                                                                                                                                                                                                                                                                                                                                                                                                                                                                                                                                                                                                                                                                                                                                                                                                
Harm_ITS1_KT343378  (390) AGAATACA---CAGTCACAAGTCGATGTAATGTAACACTAGATTACGCGAACAGCGGTAA
Harm_ITS1_OP806113  (387) AGAATACA---CAGTCACAAGTCGATGTAATGTAACACTAGATTACGCGAACAGCGGTAA
Harm_ITS1_MW390823  (387) AGAATACA---CAGTCACAAGTCGATGTAATGTAACACTAGATTACGCGAACAGCGGTAA
Harm_ITS1_AB620127  (354) AGAATACA---CAGTCACAAGTCGATGTGATGTAACACTAGATTACGCGAACAGCGGTAA
Harm_ITS1_OQ829604  (387) AGAATACA---CAGTCACAAGTCGATGTAATGTAACACTAGATTACGCGAACAGCGGTAA
Harm_ITS1_Olathe_61e (382) AGAATACA---CAGTCACAAGTCGATGTCATGTAACACTAGATTACGCGAACAGCGGTAA
Hzea_ITS1_KT343380  (409) AGAATACAAGACAGTCACAAGTCGATGTCATGTAACACTAGATTACGCGAACAGCGGTAA
Hzea_ITS1_OQ780392  (392) AGAATACAAGACAGTCACAAGTCGATGTCATGTAACACTAGATTACGCGAACAGCGGTAA
Hzea_ITS1_Olathe_61e (409) AGAATACAAGACAGTCACAAGTCGATGTCATGTAACACTAGATTACGCGAACAGCGGTAA
                          481                                                                                                                                                                                                                                                                                                                                                                                                                                                                                                                                                                                                                                                                                                                                                                                                                                                                                                                                                                                                                                                                                                                                                                                                                                                                                                                                                                                                                                                                                                                                                                                                                                                                                                                                                                                                                                                                                                                                                                                                                                                                                                                                                                                                                                                                                                                                                                                                                                                                                                                                                
Harm_ITS1_KT343378  (447) TTTAAAACTATTACCCTGGACGGTGGATCACTTGGCTCGCGGGTCGATGAAGAACGCAGT
Harm_ITS1_OP806113  (444) TTTAAAACTATTACCCTGGACGGTGGATCACTTGGCTCGCGGGTCGATGAAGAACGCAGT
Harm_ITS1_MW390823  (444) TTTAAAACTATTACCCTGGACGGTGGATCACTTGGCTCGCGGGTCGATGAAGAACGCAGT
Harm_ITS1_AB620127  (411) TTTAAAACTATTACCCTGGACGGTGGATCACTTGGCTCGCGGGTCGATGAAGAACGCAGT
Harm_ITS1_OQ829604  (444) TTTAAACTATTACCCTGGACGGTGGATCACTTGGCTCGCGGGTCGATGAAGAACGCAGT
Harm_ITS1_Olathe_61e (439) TTTAAAACTATTACCCTGGACGGTGGATCACTTGGCTCGCGGGTCGATGAAGAACGCAGT
Hzea_ITS1_KT343380  (469) TTTAAAACTATTACCCTGGACGGTGGATCACTTGGCTCGCGGGTCGATGAAGAACGCAGT
Hzea_ITS1_OQ780392  (452) TTTAAAACTATTACCCTGGACGGTGGATCACTTGGCTCGCGGGTCGATGAAGAACGCAGT
Hzea_ITS1_Olathe_61e (469) TTTAAAACTATTACCCTGGACGGTGGATCACTTGGCTCGCGGGTCGATGAAGAACGCAGT
                          541                                                                                                                                                                                                                                                                                                                                                                                                                                                                                                                                                                                                                                                                                                                                                                                                                                                                                                                                                                                                                                                                                                                                                                                                                                                                                                                                                                                                                                                                                                                                                                                                                                                                                                                                                                                                                                                                                                                                                                                                                                                                                                                                                                                                                                                                                                                                                                                                                                                                                                                                                
Harm_ITS1_KT343378  (507) TAACTGCGCGTCATAGTGTGAACTGCAGG-ACACATTTGAACATCGACATTTC
Harm_ITS1_OP806113  (504) TAACTGCGCGTCATAGTGTGAACTGCAGG-ACACATTTGAACATCGACATTTC
Harm_ITS1_MW390823  (504) TAACTGCGCGTCATAGTGTGAAC-----------------------------
Harm_ITS1_AB620127  (471) TAACTGCGCGTCATAGTGTGAACTGCAGGGACACATTTGAACATCGACATTTC
Harm_ITS1_OQ829604  (504) TAACTGCGCGTCATAGTGTGAACTGCAGG-ACACATTTGAACATCGACATTTC
Harm_ITS1_Olathe_61e (499) TAACTGCGCGTCATAGTGTGAACTGCAGG-ACACATTTGAACATCGACATTTC
Hzea_ITS1_KT343380  (529) TAACTGCGCGTCATAGTGTGAACTGCAGG-ACACATTTGAACATCGACATTTC
Hzea_ITS1_OQ780392  (512) TAACTGCGCGTCATAGTGTGAACTGCAGG-ACACATTTGAACATCGACATT--
Hzea_ITS1_Olathe_61e (529) TAACTGCGCGTCATAGTGTGAACTGCAGG-ACACATTTGAACATCGACATTTC
```

Figure 1. Alignment of reference ITS1 sequences of *Helicoverpa armigera* (Ha) and *H. zea* (Hz) with ITS1 sequences obtained from Olathe, CO sample 61e. Nucleotides identical in both *H. armigera* and *H. zea* ITS1 sequences are shown in black. Olathe_61e_Ha_ITS1 sequence was highly similar to *H. zea* ITS1 sequence except for the *H. armigera*-specific ITS1 sequences. Differences between ITS1 sequences from the two *Helicoverpa* species are shown by white text with black background. Alignment gaps are indicated by a hyphen (-).

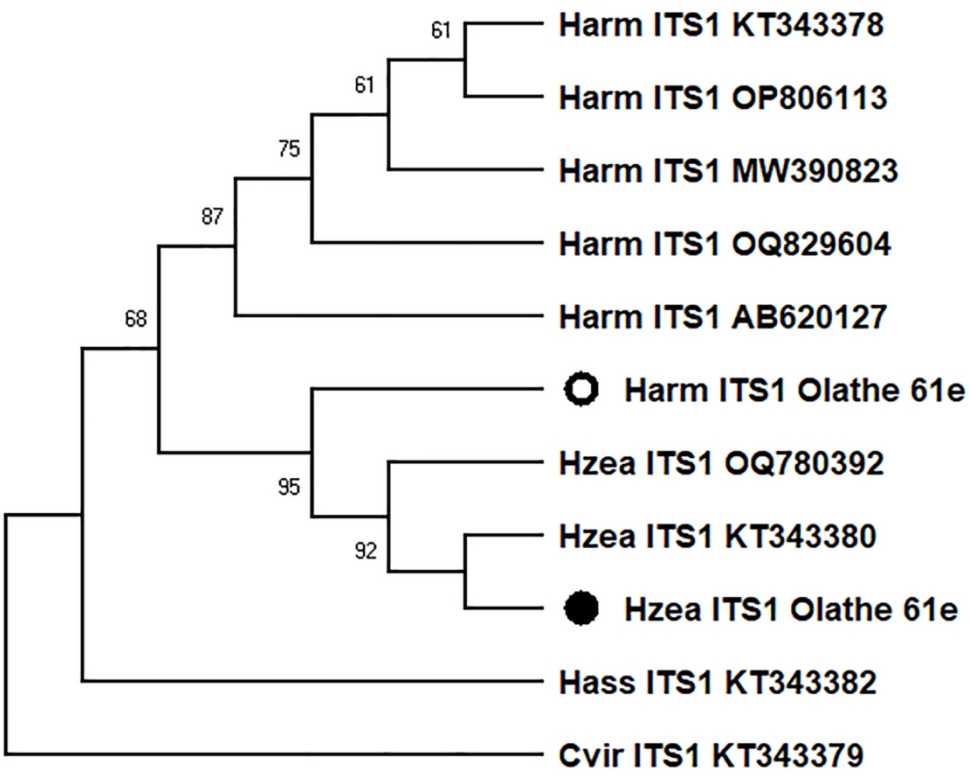

Figure 2. The evolutionary history was inferred among internal transcribed spacer 1 (ITS1) regions using Maximum Likelihood based on the Kimura 2-parameter model of sequence evolution (Kimura, 1980). The phylogeny among ITS1 regions among Helicovera armigera (Harm), *H. zea* (Hzea) and *H. assulta* (Hass) was rooted by the *Chloridea (Heliothis) virescens* (Cvir) ITS1 (GenBank accession provided at branch tips), based on a 601 nucleotide-long consensus alignment of 11 nucleotide sequences. The bootstrap consensus at each node was inferred from 10,000 replicates (Felsenstein, 1985) and partitions with less than 50% bootstrap support are collapsed. Neighbor-Join and BioNJ algorithms were applied to a matrix of pairwise distances estimated using the Maximum Composite Likelihood (MCL) approach and the topology with superior log likelihood value was selected to obtain the initial tree(s). A discrete Gamma distribution was used to model evolutionary rate differences among sites (5 categories (+G, parameter = 0.3073)). Evolutionary analyses were conducted in MEGA11 (Tamura et al. 2021).

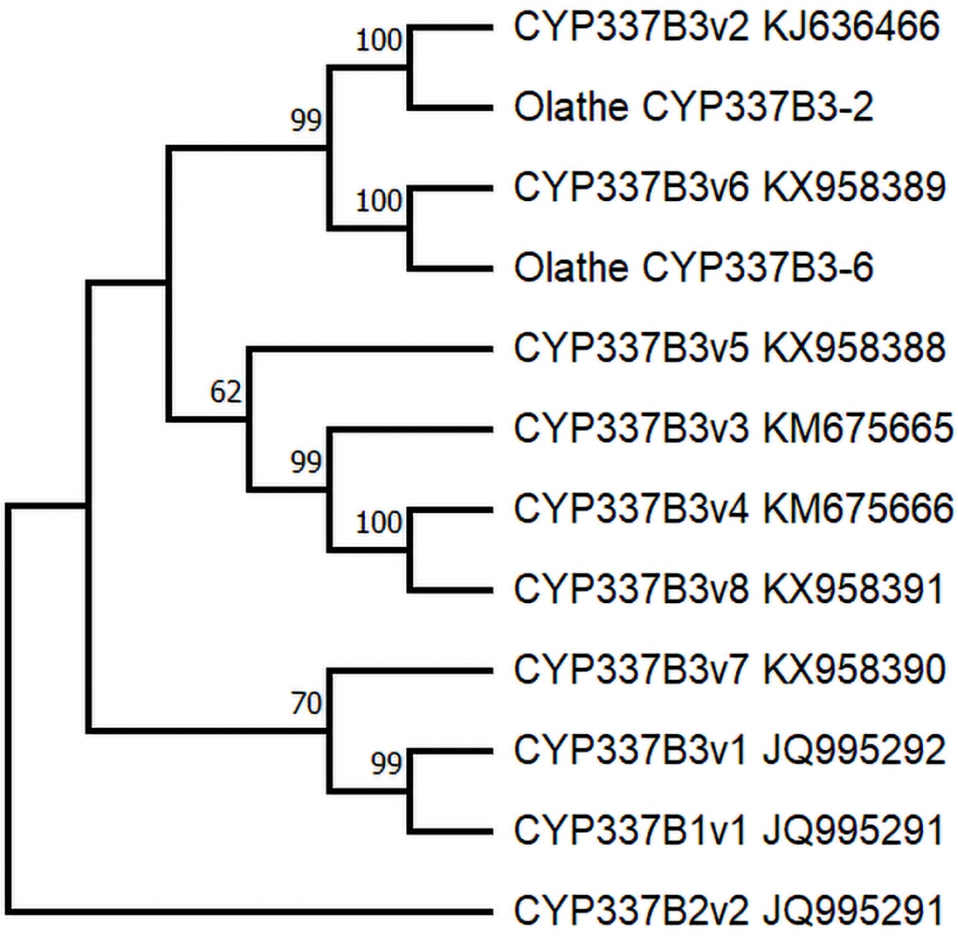

Figure 3. The evolutionary history was inferred among cytochrome P450 337B orthologs, CYP3B1-3, from *Helicoverpa armigera* and *H. zea* by using Maximum Likelihood and based on the Kimura 2-parameter model of sequence evolution (Kimura, 1980) with 10,000 bootstrap replicates (Felsenstein, 1985) as implemented in Mega 11 (Tamura et al. 2021). Relationships of alleles from the Olathe, CO population are shown with respect to reference sequences for CYP337B1, CYP337B2 and CYP337B3 paralogs (GenBank accessions include at respective branch tips) and based on 3605 positions in a consensus sequence alignment. Neighbor-Join and BioNJ algorithms were applied to a matrix of pairwise distances estimated using the Maximum Composite Likelihood (MCL) approach and the topology with superior log likelihood value was selected to obtain the initial tree(s). A discrete Gamma distribution was used to model evolutionary rate differences among sites (5 categories (+G, parameter = 0.3794) and the tree with the highest log likelihood (-9917.03) is shown.

Table S1. Trap numbers, GPS coordinates and the number of *Helicoverpa zea* samples used for screening CYP337B and ITS1 genes in this study.

Trap Number	GPS Coordinates	Number of *H. zea* *analyzed*
132	-108.011098, 38.562165	1
134	-108.015825, 38.547827	4
135	-107.916943, 38.489266	6
136	-108.011098, 38.562165	1
137	-108.054434, 38.584557	6
138	-108.015825, 38.547827	8
141	-108.068547, 38.649694	16
142	-108.059322, 38.60264	5
145	-107.909639, 38.487477	6
146	-108.073293, 38.591758	11
149	-108.016373, 38.540598	8
150	-108.016991, 38.551457	24
151	-108.053704, 38.610456	11
152	-108.111687, 38.657228	13
153	-108.044431, 38.646102	73
154	-108.016991, 38.551457	14
155	-107.960479, 38.489219	21
156	-108.050124, 38.584472	13
157	-108.023570, 38.558725	25
158	-108.023570, 38.558725	20
159	-108.040675, 38.575491	35
160	-107.990482, 38.539044	23
161	-108.040675, 38.575491	34
162	-107.950764, 38.474691	25
163	-107.914918, 38.487321	66
164	-107.960479, 38.489219	16
165	-107.970694, 38.496597	75
166	-107.954929, 38.551128	8
167	-107.954929, 38.551128	15
168	-107.971621, 38.498372	20

Trap Number	GPS Coordinates	Number of *H. zea* *analyzed*
169	-107.971621, 38.498372	13
211	-108.091077, 38.650081	12
212	-108.080870, 38.664141	14
213	-108.077449, 38.683565	17
214	-108.078346, 38.704736	12
215	-108.067737, 38.639066	29
216	-108.072320, 38.704661	24
217	-108.091077, 38.650081	25
218	-108.077434, 38.632005	74
219	-108.074783, 38.671722	62
220	-108.071173, 38.631818	46
221	-108.091077, 38.650081	60
222	-108.101899, 38.709269	105
311	-108.001276, 38.544657	2
312	-108.099386, 38.635561	28
313	-108.002041, 38.533634	7
314	-108.083571, 38.697376	12
315	-108.085612, 38.695765	15
317	-107.999232, 38.533403	9
318	-108.101954, 38.701580	22
319	-108.097406, 38.649842	2
320	-108.097406, 38.649842	4
321	-108.099386, 38.635561	14
322	-108.076984, 38.660800	30
323	-108.113262, 38.719266	66
324	-108.077128, 38.638438	81
325	-107.951346, 38.518697	37
326	-108.002959, 38.547599	92
CSU 1	-108.070247, 38.660805	64
CSU 2	-107.973397, 38.492867	37

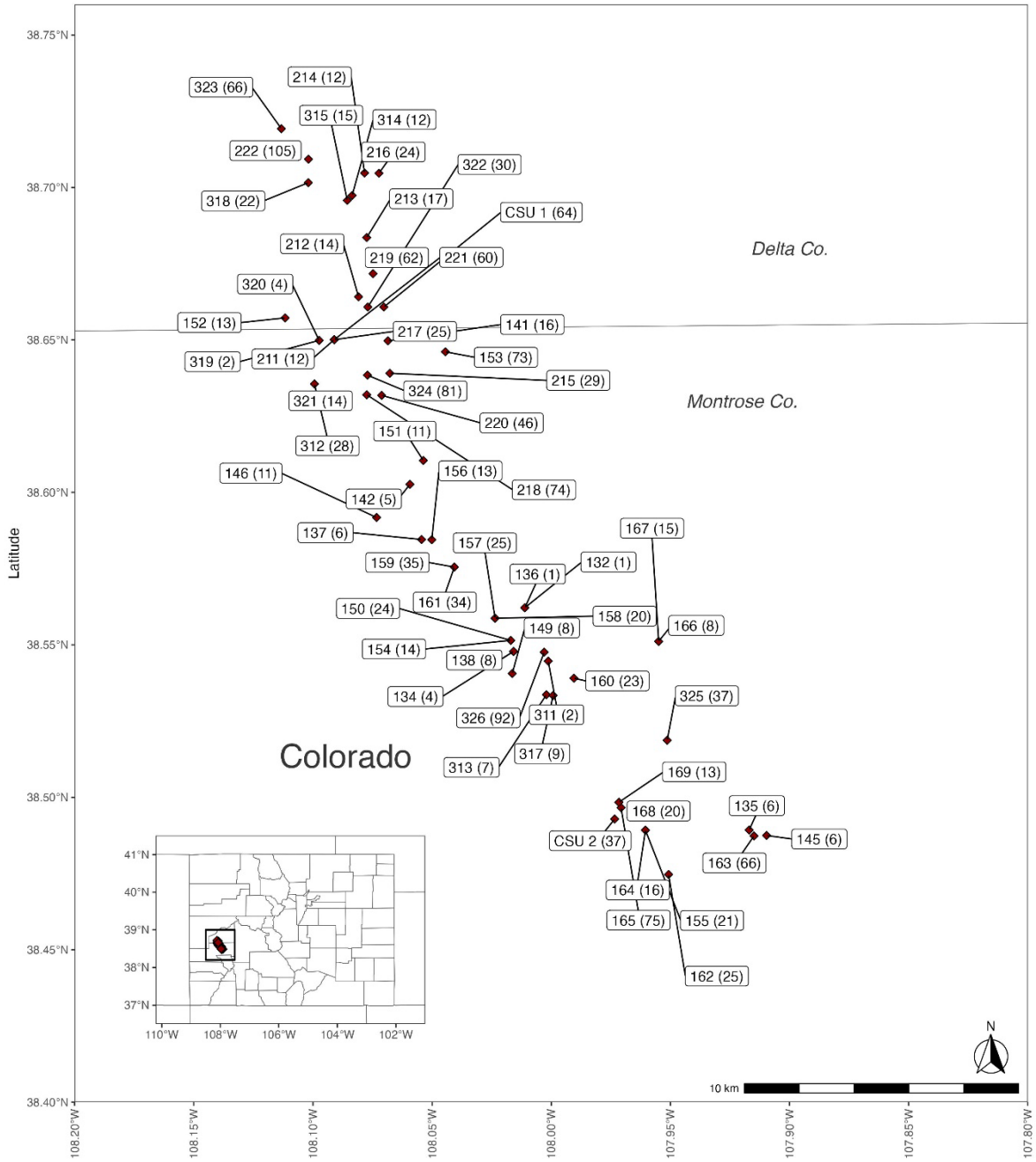

Figure S1. Locations of pheromone-lured traps used for collection of *Helicoverpa zea* in Olathe, Colorado, USA. Number of insects analyzed from each trap is indicated in parenthesis next to the trap number. R version 4.3.1 and the packages cowplot v. 1.1.3 (Wilke 2024), ggrepel v. 0.9.5 (Slowikowski 2024), ggsflabel v. 0.0.1 (Yutani 2024), ggspatial v. 1.1.9 (Dunnington 2023), maps v. 3.4.2 (Richard A. Becker, Ray Brownrigg. Enhancements by Thomas P Minka, and Deckmyn. 2023), rnaturalearth v. 1.0.1 (Massicotte and South 2023), rnaturalearthdata v. 1.0.0 (South, Michael, and Massicotte 2024), sf v. 1.0.16 (Pebesma 2018; Pebesma and Bivand 2023), tidyverse v. 2.0.0 (Wickham et al. 2019) were used in generating the site map using the data provided in the Supp. Table S1.

Package citations:

Dunnington, Dewey. 2023. *ggspatial: Spatial Data Framework for Ggplot2*. https://CRAN.R-project.org/package=ggspatial.

Massicotte, Philippe, and Andy South. 2023. *rnaturalearth: World Map Data from Natural Earth*. https://CRAN.R-project.org/package=rnaturalearth.

Pebesma, Edzer. 2018. "Simple Features for R: Standardized Support for Spatial Vector Data." *The R Journal* 10 (1): 439–46. https://doi.org/10.32614/RJ-2018-009.

Pebesma, Edzer, and Roger Bivand. 2023. *Spatial Data Science: With applications in R*. Chapman and Hall/CRC. https://doi.org/10.1201/9780429459016.

R Core Team. 2023. *R: A Language and Environment for Statistical Computing*. Vienna, Austria: R Foundation for Statistical Computing. https://www.R-project.org/.

Richard A. Becker, Original S code by, Allan R. Wilks. R version by Ray Brownrigg. Enhancements by Thomas P Minka, and Alex Deckmyn. 2023. *maps: Draw Geographical Maps*. https://CRAN.R-project.org/package=maps.

Slowikowski, Kamil. 2024. *ggrepel: Automatically Position Non-Overlapping Text Labels with "ggplot2"*. https://CRAN.R-project.org/package=ggrepel.

South, Andy, Schramm Michael, and Philippe Massicotte. 2024. *rnaturalearthdata: World Vector Map Data from Natural Earth Used in "rnaturalearth"*. https://CRAN.R-project.org/package=rnaturalearthdata.

Wickham, Hadley, Mara Averick, Jennifer Bryan, Winston Chang, Lucy D'Agostino McGowan, Romain François, Garrett Grolemund, et al. 2019. "Welcome to the tidyverse." *Journal of Open Source Software* 4 (43): 1686. https://doi.org/10.21105/joss.01686.

Wilke, Claus O. 2024. *cowplot: Streamlined Plot Theme and Plot Annotations for "ggplot2"*. https://CRAN.R-project.org/package=cowplot.

Yutani, Hiroaki. 2024. *ggsflabel: Labels for "sf" with "ggplot2"*. https://yutannihilation.github.io/ggsflabel/.

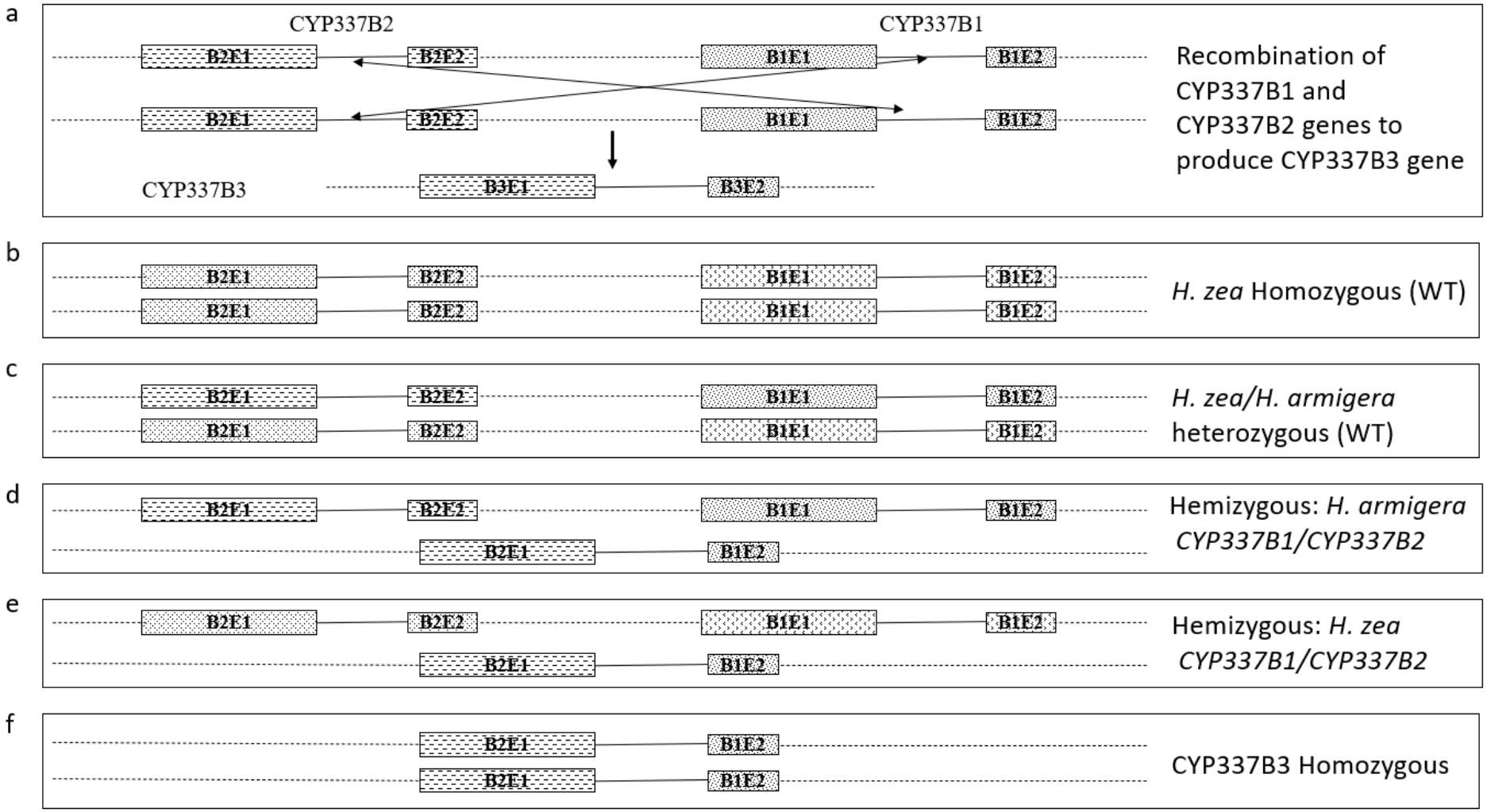

Figure S2. Schematic representation of CYP337B genes and potential genotypic configurations of CYP337B1/CYP337B2 genes and CYP337B3 genes in a population of *Helicoverpa zea* with CYP337B genes introgressed from *H. armigera.* a). unequal crossover between CYP337B1 and CYP337B2 genes to produce CYP337B3 gene. b). homozygous CYP337B1/CYP337B2 genes originated from wild type *H. zea.* c). heterozygotes of CYP337B1/CYP337B2 with each chromosome originating from *H. armigera* and *H. zea*. d). CYP337B3 hemizygotes with *H. armigera* CYP337B1/CYP337B2 genes. e). CYP337B3 hemizygotes with *H. zea* CYP337B1/CYP337B2 genes. f). CYP337B3 homozygotes. Allelic variants of different genes are not shown. B2E1: exon 1 of CYP337B2; B2E2: exon 2 of CYP337B2; B1E1: exon 1 of CYP337B1; B1E2: exon 2 of CYP337B1.

```
                    1                                                                                  80
CYP337B1v1_JQ995291 ATGTTATTGTCAATATTATTCACGATATTTATAATATTGTGCTCAATAGTGTTATACTTTAAGGTAACGAACAGTAACTA
CYP337B2v2_JQ995291 ATGTTGTTCATAATATTACTCACGATATTAATAGTACTGTGCTCAATAGTGCTCCATTTCAAGTTCACAAACAGCAAATA
CYP337B3v1_JQ995292 ATGTTGTTCGTGATATTACTCACGATATTAATAGTACTGTGCTCAATAGTGCTCCATTTTAAGTTCACAAACAGCAAATA
CYP337B3v2_KM675664 ATGTTGTTCGTAATATTACTCACGATATTAATAGTACTGTGCTCAATAGTGCTCCATTTCAAGTTCACAAACAGCAAATA
CYP337B3v3_KM675665 ATGTTGTTCGTAATATTACTCACGATATTAATAGTACTGTGCTCAATAGTGCTCCATTTCAAGTTCACAAACAGCAAATA
CYP337B3v4_KM675666 ATGTTGTTCGTAATATTACTCACGATATTAATAGTACTGTGCTCAATAGTGCTCCATTTCAAGTTCACAAACAGCAAATA
CYP337B3v5_KX958388 ATGTTGTTCGTAATATTACTCACGATATTAATAGTACTGTGCTCAATAGTGCTCCATTTCAAGTTCACAAACAGCAAATA
CYP337B3v6_KX958389 ATGTTGTTCGTGATATTACTCACGATATTAATAGTACTGTGCTCAATAGTGCTCCATTTCAAGTTCACAAACAGCAAATA
CYP337B3v7_KX958390 ATGTTGTTCGTGATATTACTCACGATATTAATAGTACTGTGCTCAATAGTGCTCCATTTCAAGTTCACAAACAGCAAATA
CYP337B3v8_KX958391 ATGTTGTTCGTAATATTACTCACGATATTAATAGTACTGTGCTCAATAGTGCTCCATTTCAAGTTCACAAACAGCAAATA
  CYP337B3_Olathe-2 ATGTTGTTCGTAATATTACTCACGATATTAATAGTACTGTGCTCAATAGTGCTCCATTTCAAGTTCACAAACAGCAAATA
  CYP337B3_Olathe-6 ATGTTGTTCGTAATATTACTCACGATATTAATAGTACTGTGTTCAATAGTGCTCCATTTTAAGTTCACAAACAGCAAATA
                    81                                                                                160
CYP337B1v1_JQ995291 CTGGAAGAAATGGAACGTGTTGCAGATAAGTGACGTGTCATTAGAATTTCTATTTAGTAAGGAAGCTTTGCCAATAATTG
CYP337B2v2_JQ995291 CTGGAAAAAAAGAACATAATCCAGATAAAAGATTTGACATTCACCTTTCTGTTCAACAAGCAATCGATGCCAGAACTAA
CYP337B3v1_JQ995292 CTGGAAAAAGAAGAATATAATCCAGATAAAAGATTTGACATTCACCTTTCTGTTCAACAAGCAATCGATGCCAGAACTAA
CYP337B3v2_KM675664 CTGGAAAAAGAAGAACATTATCCAGATAAAAGATTTGACATTCACCTTTCTGTTCAACAAGCAATCGATGCCAGAACTAA
CYP337B3v3_KM675665 CTGGAAAAAGAAGAACATTATCCAGATAAAAGATTTGACATTCACCTTTCTGTTCAACAAGCAATCGATGCCAGAACTAA
CYP337B3v4_KM675666 CTGGAAAAAGAAGAACATTATCCAGATAAAAGATTTGACATTCACCTTTCTGTTCAACAAGCAATCGATGCCAGAACTAA
CYP337B3v5_KX958388 CTGGAAAAAGAAGAACATTATCCAGATAAAAGATTTGACATTCACCTTTCTGTTCAACAAGCAATCGATGCCAGAACTAA
CYP337B3v6_KX958389 CTGGAAAAAGAAGAACATTATCCAGATAAAAGATTTGACATTCACCTTTCTGTTCAACAAGCAATCGATGCCAGAACTAA
CYP337B3v7_KX958390 CTGGAAAAAGAAGAACATAATCCAGATAAAAGATTTGACATTCACCTTTCTGTTCAACAAGCAATCGATGCCAGAACTAA
CYP337B3v8_KX958391 CTGGAAAAAGAAGAACATAATCCAGATAAAAGACTTGACATTCACCTTTTCTGTTCAACAAGCAATCGATGCCAGAACTAA
  CYP337B3_Olathe-2 CTGGAAAAAGAAGAACATTATCCAGATAAAAGATTTGACATTCACCTTTCTGTTCAACAAGCAATCGATGCCAGAACTAA
  CYP337B3_Olathe-6 CTGGAAAAAGAAGAATATAATACAGATAAAAGATTTGACATTCACCTTTCTGTTCAACAAGCAATCGATGCCAGAACTAA
                    161                                                                               240
CYP337B1v1_JQ995291 TCAAAAGAATGTATGATGAACATGATGTTCCTCATATTGGAACGACTTCAGCGACAATCCCAACGCTAATCGTCAAGAAC
CYP337B2v2_JQ995291 TCAAATCGATTTACGATAAACATGATGAACCGTATATTGGAACGACGTCCGCGACAATACCAACGCTCATTATAAAGAAC
CYP337B3v1_JQ995292 TCAAATCGATTTACGATAAACATGATGAACCGTATATTGGAACGACGTCGGCGACAATACCAACGCTCATTATAAAGAAC
CYP337B3v2_KM675664 TCAAATCGATTTACGATAAACATGATGAACCGTATATTGGAACGACGTCGGCGACAATACCAACGCTCATTATAAAGAAC
CYP337B3v3_KM675665 TCAAATCGATTTACGATAAACATGATGAACCGTATATTGGAACGACGTCGGCGACAATACCAACGCTCATTATAAAGAAC
CYP337B3v4_KM675666 TCAAATCGATTTACGATAAACATGATGAACCGTATATTGGAACGACGTCGGCGACAATACCAACGCTCATTATAAAGAAC
CYP337B3v5_KX958388 TCAAATCGATTTACGATAAACATGATGAACCGTATATTGGAACGACGTCCGCGACAATACCAACGCTCATTATAAAGAAC
CYP337B3v6_KX958389 TCAAATCGATTTACGATAAACATGATGAACCGTATATTGGAACGACGTCCGCGACAATACCAACGCTCATTATAAAGAAC
CYP337B3v7_KX958390 TCAAGTCGATTTACGATAAACATGATGAACCGTATATTGGGACGACGTCGGCGACAATACCAACGCTGATTATAAAGAAC
CYP337B3v8_KX958391 TCAAATCGATTTACGATAAACATGATGAACCGTATATTGGAACGACGTCCGCGACAATACCAACGCTGATTATAAAGAAC
  CYP337B3_Olathe-2 TCAAATCGATTTACGATAAACATGATGAACCGTATATTGGAACGACGTCGGCGACAATACCAACGCTCATTATAAAGAAC
  CYP337B3_Olathe-6 TCAAATCGATTTACGATAAACATAATGAACCGTATATTGGAACGACGTCGGCGACAATACCAACGCTCATTTTAAAGAAC
                    241                                                                               320
CYP337B1v1_JQ995291 GTCGATGATATTCAAGCAGTGTTAGCTGGTGACTTCCAAAGTTTCAACAGTCGAGGAATAATAAGCAACGCCAATGACTT
CYP337B2v2_JQ995291 CTCAATGATATTCAAGCAGTGTTAGCTGGTGACTTCCAAAGTTTCTACAGTCGAGGAATAATAACCAGTCCAAACGATGT
CYP337B3v1_JQ995292 CTCGATGATATTCAAGCAGTGTTAGCTGGTGACTTCCAAAGTTTCTACAGTCGAGGAATAATAACCAGTCCAAACGATGT
CYP337B3v2_KM675664 CTCGATGATATTCAAGCAGTGTTAGCTGGTGACTTCCAAAGTTTCTACAGTCGAGGAATAATAACCAGTCCAAACGATGT
CYP337B3v3_KM675665 CTCGATGATATTCAAGCAGTGTTAGCTGGTGACTTCCAAAGTTTCTACAGTCGAGGAATAATAACCAGTCCAAACGATGT
CYP337B3v4_KM675666 CTCGATGATATTCAAGCAGTGTTAGCTGGTGACTTCCAAAGTTTCTACAGTCGAGGAATAATAACCAGTCCAAACGATGT
CYP337B3v5_KX958388 CTCGATGATATTCAAGCAGTGTTAGCTGGTGACTTCCAAAGTTTCTACAGTCGAGGAATAATAACCAGTCCAAACGATGT
CYP337B3v6_KX958389 CTCGATGATATTCAAGCAGTGTTAGCTGGTGACTTCCAAAGTTTCTACAGTCGAGGAATAATAACCAGTCCAAACGATGT
CYP337B3v7_KX958390 CTCGATGATATTCAAGCAGTGTTAGCTGGTGACTTCCAAAGTTTCTACAGTCGAGGAATAATAACCAGTCCAAATGATGT
CYP337B3v8_KX958391 CTCGATGATATTCAAGCGGTGTTAGCTGGTGACTTCCAAAGTTTCTACAGTCGAGGAATAATAACCAGTCCAAACGATGT
  CYP337B3_Olathe-2 CTCGATGATATTCAAGCAGTGTTAGCTGGTGACTTCCAAAGTTTCTACAGTCGAGGAATAATAACCAGTCCAAACGACGT
  CYP337B3_Olathe-6 CTCGATGATATTCAAGCAGTGTTAGCTGGTGACTTCCAAAGTTTCTACAGTCGAGGAATAATAACCAGTCCAAACGATGT
                    321                                                                               400
CYP337B1v1_JQ995291 ACTAGCAGATAACTTGTTATTCACGAATGATTTCCATAGATGGAAACTCATAAGGCAAAAACTCAGCCCAGTCTTCACGA
CYP337B2v2_JQ995291 GTTAGCTGATAATTTGTTATTAATGGACGACTTCAAAAAATGGAAACTCATACGACAAAAACTCACTCCAATTTTCACTA
CYP337B3v1_JQ995292 GTTAGCTGATAATTTGTTATTAATGGACGACTTCAAAAAATGGAAACTCATACGACAAAAACTCACTCCAATTTTCACTA
CYP337B3v2_KM675664 GTTAGCTGATAATTTGTTATTAATGGACGACTTCAAAAAATGGAAACTCATACGACAAAAACTCACTCCAATTTTCACTA
CYP337B3v3_KM675665 GTTAGCTGATAATTTGTTATTAATGGACGACTTCAAAAAATGGAAACTCATACGACAAAAACTCACTCCAATTTTCACTA
CYP337B3v4_KM675666 GTTAGCTGATAATTTGTTATTAATGGACGACTTCAAAAAATGGAAACTCATACGACAAAAACTCACTCCAATTTTCACTA
CYP337B3v5_KX958388 GTTAGCTGATAATTTGTTATTAATGGACGACTTCAAAAAATGGAAACTCATACGACAAAAACTCACTCCAATTTTCACTA
CYP337B3v6_KX958389 GTTAGCTGATAATTTGTTATTAATGGACGACTTCAAAAAATGGAAACTCATACGACAAAAACTCACTCCAATTTTCACTA
CYP337B3v7_KX958390 GTTAGCTGATAATTTGTTATTAATGGACGACTTCAAAAAGTGGAAACTCATACGACAAAAACTCACTCCAATTTTCACTA
CYP337B3v8_KX958391 GTTAGCTGATAATTTGTTATTAATGGACGACTTCAAAAAATGGAAACTCATACGACAAAAACTCACTCCAATTTTCACTA
  CYP337B3_Olathe-2 GTTAGCTGATAATTTGTTATTAATGGACGACTTCAAAAAATGGAAACTCATACGACAAAAACTCACTCCAATTTTCACTA
  CYP337B3_Olathe-6 GTTAGCTGATAATTTGTTATTAATGGACGACTTCAAAAAATGGAAACTCATACGACAAAAACTCACTCCAATTTTCACTA
```

```
                    401                                                                                                                                                                                                                                                                                                                                                                                                                                                                                                                                                                                                                                                                                                                                                                                                                                                                                                                                                                                                                                                                                                                                                                                                                                                                                                                                                                                                                                                                                                                                                                                                                                                                                                                                                                                                                                                                                                                                                                                                                                                                                                                                                                                                                                                                                                                                                                                                                                                                                                                                                                                                                                                                                                                                                                                                                                                                                                                                                                                                                                                                                                                                                                                                                                                                                                                                                                                                                                                                                                                                                                                                                                                                                                                                                                                                                                                                                                                                                                                                                                                                                                                                                                                                                                                                                                                                                                                                                                                                                                                                                                                                                                                                                                                                                                                                                                                                                                                                                                                                                                                                                                                                                                                                                                                                                                                                                                                                                                                                                                                                                                                                                                                                                                                                                                                                                                                                                                                                                                                                                                                                                                                                                                                                                                                                                                                                                                                                                                                                                                                                                                                                                                                                                                                                                                                                                                                                                                                                                                                                                                                                                                                                                                                                                                                                                                                                                                                                                                                                                                                                                                                                                                                                                                                                                                                                                                                                                                                                                                                                                                                                                                                                                                                                                                                                                                                                                                                                                                                                                                                                                                                                                                                                                                                                                                                                                                                                                                                                                                                
CYP337B1v1_JQ995291 GTGCTAAGCTCAAGAATATGTTTTATATCATAGAGAGATGTGCCCGAGATTTTGTGGAATTGGTTGAACATAATGCTCAT
CYP337B2v2_JQ995291 GTGCGAAACTCAAAAACATGTTTTACATCATAGAAAAAGTGCCCGAGATTTCGTTGAGTTGGTTGAAGATAATGTTCAT
CYP337B3v1_JQ995292 GTGCGAAACTCAAAAATATGTTTTACATCATAGAAAAAGTGCCCGAGATTTTGTTGAGTTGGTTGAAGATAATGTTCAT
CYP337B3v2_KM675664 GTGCGAAACTCAAAAACATGTTTTACATCATAGAAAAAGTGCCCGAGATTTTGTTGAGTTGGTTGAAGATAATGTTCAT
CYP337B3v3_KM675665 GTGCGAAACTCAAAAACATGTTTTACATCATAGAAAAAGTGCCCGAGATTTTGTTGAGCTGGTTGAAGATAATGTTCAT
CYP337B3v4_KM675666 GTGCGAAACTCAAAAACATGTTTTACATCATAGAAAAAGTGCCCGAGATTTTGTTGAGTTGGTTGAACATAATGCTTGT
CYP337B3v5_KX958388 GTGCGAAACTCAAAAACATGTTTTACATCATAGAAAAAGTGCCCGAGATTTTGTTGAGTTGGTTGAAGATAATGTTCAT
CYP337B3v6_KX958389 GTGCGAAACTCAAAAACATGTTTTACATCATAGAAAAAGTGCTCGAGATTTTGTTGAGTTGGTTGAAGATAATGTTCAT
CYP337B3v7_KX958390 GTGCGAAACTTAAAAACATGTTTTACATCATAGAAAAAGTGCCCGAGATTTTGTGGAATTGGTTGAACACAATGCTCAT
CYP337B3v8_KX958391 GTGCGAAACTCAAAAACATGTTTTACATCATAGAAAAAGTGCCCGAGATTTTGTTGAGTTGGTTGAACATAATGCTTGT
  CYP337B3_Olathe-2 GTGCGAAACTCAAAAACATGTTTTACATCATAGAAAAAGTGCCCGAGATTTTGTTGAGTTGGTTGAAGATAATGTTCAT
  CYP337B3_Olathe-6 GTGCGAAACTCAAAAACATGTTTTACATCATAGAAAAAGTGCTCGAGATTTTGTTGAGTTGGTTGAAGATAATGTTCAT
                    481                                                                                                                                                                                                                                                                                                                                                                                                                                                                                                                                                                                                                                                                                                                                                                                                                                                                                                                                                                                                                                                                                                                                                                                                                                                                                                                                                                                                                                                                                                                                                                                                                                                                                                                                                                                                                                                                                                                                                                                                                                                                                                                                                                                                                                                                                                                                                                                                                                                                                                                                                                                                                                                                                                                                                                
CYP337B1v1_JQ995291 CTGCGAAAGGTTCCATTCAATCTGGTAAGCAGATACACCACAGCATCGATCAGTGCTGCTGTATTCGGTATAGATACTCA
CYP337B2v2_JQ995291 CTGCGAAAGAAACCGTTCAAACTTATGACCAGATACACTACAGCGTCTATTAGTGCTGCAGTATTTGGTATAGATACTCA
CYP337B3v1_JQ995292 CTGCGAAAGAAACCGTTCAAACTTATGACCAGATACACTACAGCGTCTATTAGTGCTGCTGTATTCGGTATAGATACTCA
CYP337B3v2_KM675664 CTGCGAAAGAAACCGTTCAAACTTATGACCAGATACACTACAGCGTCTATTAGTGCTGCAGTATTTGGTATAGATACACA
CYP337B3v3_KM675665 CTGCGAAAGAAACCGTTCAAACTTATGACCAGATACACTACAGCGTCTATTAGTGCTGCAGTATTTGGTATAGATACACA
CYP337B3v4_KM675666 CTGCAAAAGGTTCCATTCAATCTGGTAAGCAGATACACCACAGCATCGATCAGTGCTGCTGTATTCGGTATAGATACTCA
CYP337B3v5_KX958388 CTGCGAAAGAAACCGTTCAAACTTATGACCAGATACACTACAGCGTCTATTAGTGCTGCAGTATTTGGTATAGATACTCA
CYP337B3v6_KX958389 CTGCGAAAGAAACCGTTCAAACTTATGACCAGATACACTACAGCGTCTATTAGTGCTGCAGTATTTGGTATAGATACTCA
CYP337B3v7_KX958390 CTGCGAAAGGTTCCATTCAATTTGATAAGCAGATACACCACAGCATCGATCAGTGCTGCTGTATTCGGTATAGATACTCA
CYP337B3v8_KX958391 CTGCAAAAGGTTCCATTCAATCTGGTAAGCAGATACACCACAGCATCGATCAGTGCTGCTGTATTCGGTATAGATACTCA
  CYP337B3_Olathe-2 CTGCGAAAGAAACCGTTCAAACTTATGACCAGATACACTACAGCGTCTATTAGTGCTGCAGTATTTGGTATAGATACACA
  CYP337B3_Olathe-6 CTGCGAAAGAAACCGTTCAAACTTATGACCAGATACACTACAGCGTCTATTAGTGCTGCAGTATTTGGTATAGATACTCA
                    561                                                                                                                                                                                                                                                                                                                                                                                                                                                                                                                                                                                                                                                                                                                                                                                                                                                                                                                                                                                                                                                                                                                                                                                                                                                                                                                                                                                                                                                                                                                                                                                                                                                                                                                                                                                                                                                                                                                                                                                                                                                                                                                                                                                                                                                                                                                                                                                                                                                                                                                                                                                                                                                                                                                                                                
CYP337B1v1_JQ995291 AGTAAAGAGTACCATGGAATCACCATTCGTTGAATTGGCATTTAGAGCTTTACGACCATC-GTTTATTCAAAATGTAATA
CYP337B2v2_JQ995291 AGTGAAGAATTCCATGGAGTCACCCCTTGTGGATATGGCATTCAAGGCATTAGAACCCTCAGTATATGCAATCA-TAGTG
CYP337B3v1_JQ995292 AGTAAAGAGTACCATGGAATCACCATTCGTTGAATTGGCATTTAGAGCTTTACGACCATC-GTTTATTCAAAATGTAATA
CYP337B3v2_KM675664 AGTAAAGAGTACCATGGAATCACCATTCGTTGAATTGGCATTTAGAGCTTTACGACCATC-GTTTATTCAAAATGTAATA
CYP337B3v3_KM675665 AGTAAAGAGTACCATGGAATCACCATTCGTTGAATTGGCATTTAGAGCTTTACGACCATC-GTTTATTCAAAATGTAATA
CYP337B3v4_KM675666 AGTAAAGAGTACCATGGAATCACCATTCGTTGAATTGGCATTTAGAGCTTTACGACCATC-GTTTATTCAAAATGTAATA
CYP337B3v5_KX958388 AGTGAAGAGTACCATGGAATCACCATTCGTTGAATTGGCATTTAGAGCTTTGCGACCATC-GTTTATTCAAAATGTAATA
CYP337B3v6_KX958389 AGTAAAGAGTACCATGGAATCACCATTCGTTGAATTGGCATTTAGAGCTTTACGACCATC-GTTTATTCAAAATGTAATA
CYP337B3v7_KX958390 AGTAAAGAGTACCATGGAATCACCATTCGTTGAATTAGCATTTAGAGCTTTACGACCATC-GTTTATTCAAAATGTAATA
CYP337B3v8_KX958391 AGTAAAGAGTACCATGGAATCACCATTCGTTGAATTGGCATTTAGAGCTTTACGACCATC-GTTTATTCAAAATGTAATA
  CYP337B3_Olathe-2 AGTAAAGAGTACCATGGAATCACCATTCGTTGAATTGGCATTTAGAGCTTTACGACCATC-GTTTATTCAAAATGTAATA
  CYP337B3_Olathe-6 AGTAAAGAGTACCATGGAATCACCATTCGTTGAATTGGCATTTAGAGCTTTACGACCATC-GTTTATTCAAAATGTAATA
                    641                                                                                                                                                                                                                                                                                                                                                                                                                                                                                                                                                                                                                                                                                                                                                                                                                                                                                                                                                                                                                                                                                                                                                                                                                                                                                                                                                                                                                                                                                                                                                                                                                                                                                                                                                                                                                                                                                                                                                                                                                                                                                                                                                                                                                                                                                                                                                                                                                                                                                                                                                                                                                                                                                                                                                                
CYP337B1v1_JQ995291 GTTGTTATTGCAAATACTTTCCCTAGATTGTACAAACTCTTGCAGTTGAAACTTTTTGGTGAACATGAAGAATTTTTTGT
CYP337B2v2_JQ995291 ACTATAATTGCGAATACTTTCCCTAAAGTACACAAACTTTTGAAGCTCAAAACCTTCGGTGGACAAGAAGATTTTTTTGT
CYP337B3v1_JQ995292 GTTGTTATTGCAAATACTTTCCCTAGATTGTACAAACTCTTGCAGTTGAAACTTTTTGGTGAACATGAAGAATTTTTTGT
CYP337B3v2_KM675664 GTTGTTATTGCAAATACTTTCCCTAGATTGTACAAACTCTTGCAGTTGAAACTTTTTGGTGAACATGAAGAATTTTTTGT
CYP337B3v3_KM675665 GTTGTTATTGCAAATACTTTCCCTAGATTGTACAAACTCTTGCAGTTGAAACTTTTTGGTGAACATGAAGAATTTTTTGT
CYP337B3v4_KM675666 GTTGTTATTGCAAATACTTTCCCTAGATTGTACAAACTCTTGCAGTTAAAACTTTTTGGTGAACATGAAGAATTTTTTGT
CYP337B3v5_KX958388 GTTGTTATTGCAAATACTTTCCCTAGATTGTACAAACTCTTGCAGTTGAAACTTTTTGGTGAACATGAAGAATTTTTTGT
CYP337B3v6_KX958389 GTTGTTATTGCAAATACTTTCCCTAGATTGTACAAACTCTTGCAGTTGAAACTTTTTGGTGAACATGAAGAATTTTTTGT
CYP337B3v7_KX958390 GTTGTTATTGCAAATACTTTCCCTAGATTGTACAAACTCTTGCAGTTGAAACTTTTTGGTGAACATGAAGAATTTTTTGT
CYP337B3v8_KX958391 GTTGTTATTGCAAATACTTTCCCTAGATTGTACAAACTCTTGCAGTTGAAACTTTTTGGTGAACATGAAGAATTTTTTGT
  CYP337B3_Olathe-2 GTTGTTATTGCAAATACTTTCCCTAGATTGTACAAACTCTTGCAGTTGAAACTTTTTGGTGAACATGAAGAATTTTTTGT
  CYP337B3_Olathe-6 GTTGTTATTGCAAATACTTTCCCTAGATTGTACAAACTCTTGCAGTTGAAACTTTTTGGTGAACATGAAGAATTTTTTGT
                    721                                                                                                                                                                                                                                                                                                                                                                                                                                                                                                                                                                                                                                                                                                                                                                                                                                                                                                                                                                                                                                                                                                                                                                                                                                                                                                                                                                                                                                                                                                                                                                                                                                                                                                                                                                                                                                                                                                                                                                                                                                                                                                                                                                                                                                                                                                                                                                                                                                                                                                                                                                                                                                                                                                                                                                
CYP337B1v1_JQ995291 GGGTGCAGTGAAAACTGTTTTAGAAAGTAGGAGGCATGATACTACTAAAAGATATGATTTTATTGAGATTTGCTTGGAAC
CYP337B2v2_JQ995291 TGGTATGGTTAAAAAAGTTTTAGACAGTAGAAGGCATGACACGACTAAGAGACATGATTTTATTGAGATATGTTTGGAGT
CYP337B3v1_JQ995292 GGGTGCAGTGAAAACTGTTTTAGAAAGTAGGAGGCATGATACTACTAAAAGATATGATTTTATTGAGATTTGCTTGGAAC
CYP337B3v2_KM675664 GGGTGCAGTGAAAACTGTTTTAGAAAGTAGGAGGCATGATACTACTAAAAGATATGATTTTATTGAGATTTGCTTGGAAC
CYP337B3v3_KM675665 GGGTGCAGTGAAAACTGTTTTAGAAAGTAGGAGGCATGATACTACTAAAAGATATGATTTTATTGAGATTTGCTTGGAAC
CYP337B3v4_KM675666 GGGTGCAGTGAAAACTGTTTTAGAAAGTAGGAGGCATGATACTACTAAAAGATATGATTTTATTGAGATTTGCTTGGAAC
CYP337B3v5_KX958388 GGGTGCAGTGAAAACTGTTTTAGAAAGTAGGAGGCATGATACTACTAAAAGATATGATTTTATTGAGATTTGCTTGGAAC
CYP337B3v6_KX958389 GGGGGCAGTGAAAACTGTTTTAGAAAGTAGGAGGCATGATACTACTAAAAGATATGATTTTATTGAGATTTGCTTGGAAC
CYP337B3v7_KX958390 GGGTGCAGTGAAAACTGTTTTAGAAAGTAGGAGGCATGATACTACTAAAAGATATGATTTTATTGAGATTTGCTTGGAAC
CYP337B3v8_KX958391 GGGTGCAGTGAAAACTGTTTTAGAAAGTAGGAGGCATGATACTACTAAAAGATATGATTTTATTGAGATTTGCTTGGAAC
  CYP337B3_Olathe-2 GGGTGCAGTGAAAACTGTTTTAGAAAGTAGGAGGCATGATACTACTAAAAGATATGATTTTATTGAGATTTGCTTGGAAC
  CYP337B3_Olathe-6 GGGGGCAGTGAAAACTGTTTTAGAAAGTAGGAGGCATGATACTACTAAAAGATATGATTTTATTGAGATTTGCTTGGAAC
```

```
                      801                                                                                                                                                                                                                                                                                                                                                                                                                                                                                                                                                                                                                                                                                                                                                                                                                                                                                                                                                                                                                                                                                                                                                                                                                                                                                                                                                                                                                                                                                                                                                                                                                                                                                                                                                                                                                                                                                                                                                                                                                                                                                                                                                                                                                                                                                                                                                                                                                                                                                                                                                                                                                                                                                                                                                                                                                                                                                                                                                                                                                                                                                                                                                                                                                                                                                                                                                                                                                                                                                                                                                                                                                                                                                                                                                                                                                                                                                                                                                                                                                                                                                                                                                                                                                                                                                                                                                                                                                                                                                                                                                                                                                                                                                                                                                                                                                                                                                                                                                                                                                                                                                                                                                                                                                                                                                                                                                                                                                                                                                                                                                                                                                                                                                                                                                                                                                                                                                                                                                                                                                                                                                                                                                                                                                                                                                                                                                                                                                                                                                                                                                                                                                                                                                                                                                                                                                                                                                                                                                                                                                                                                                                                                                                                                                                                                                                                                                                                                                                                                                                                                                                                                                                                                                                                                                                                                                                                                                                                                                                                                                                                                                                                                                                                                                                                                                                                                                                                                                                                                                                                                                                                                                                                                                                                                                                                                                                                                                                                                                                                                                                                                                                                                                                                                                                                                                                                                                                                                                                                                                                                                                                                                                                                                                                                                                                                
CYP337B1v1_JQ995291   TACAGAAGAATGGAATAATGCAGGACTTTTCAACTGGATATAAATTGGAGCCGACCGACGAACTGATGGCTGCTCAAGCA
CYP337B2v2_JQ995291   TACAAAAACATGGAGTAATGCAAGACTTTACGACTGGATACGAGTTGGAGCCAACAGATGAACTAATGGCTGCACAGGCG
CYP337B3v1_JQ995292   TACAGAAGAATGGAATAATGCAGGACTTCTCAACTGGATATAAATTGGAGCCGACCGACGAACTGATGGCTGCTCAAGCA
CYP337B3v2_KM675664   TACAGAAGAATGGAATAATGCAGGACTTTTCAACTGGATATAAATTGGAGCCGACCGACGAACTGATGGCTGCTCAAGCA
CYP337B3v3_KM675665   TACAGAAGAATGGAATAATGCAGGACTTCTCAACTGGATATAAATTGGAGCCGACCGACGAACTGATGGCTGCTCAAGCA
CYP337B3v4_KM675666   TACAGAAGAATGGAATAATGCAGGACTTCTCAACTGGATATAAATTGGAGCCGACTGACGAACTGATGGCTGCTCAAGCA
CYP337B3v5_KX958388   TACAGAAGAATGGAATAATGCAGGACTTCTCAACTGGTTATAAATTGGAGCCAACCGACGAACTGATGGCTGCTCAAGCA
CYP337B3v6_KX958389   TACAGAAGAATGGAATAATGCAGGACTTTTCAACTGGATATAAATTGGAGCCGACCGACGAACTGATGGCTGCTCAAGCA
CYP337B3v7_KX958390   TACAGAAGAATGGAATAATGCAGGACTTCTCAACTGGATATAAGTTGGAGCCGACCGACGAACTGATGGCTGCTCAAGCA
CYP337B3v8_KX958391   TACAGAAGAATGGAATAATGCAGGACTTCTCAACTGGATATAAATTGGAGCCGACTGACGAACTGATGGCTGCTCAAGCA
  CYP337B3_Olathe-2   TACAGAAGAATGGAATAATGCAGGACTTTTCAACTGGATATAAATTGGAGCCGACCGACGAACTGATGGCTGCTCAAGCA
  CYP337B3_Olathe-6   TACAGAAGAATGGAATAATGCAGGACTTTTCAACTGGATATAAATTGGAGCCGACCGACGAACTGATGGCTGCTCAAGCA
                      881                                                                                                                                                                                                                                                                                                                                                                                                                                                                                                                                                                                                                                                                                                                                                                                                                                                                                                                                                                                                                                                                                                                                                                                                                                                                                                                                                                                                                                                                                                                                                                                                                                                                                                                                                                                                                                                                                                                                                                                                                                                                                                                                                                                                                                                                                                                                                                                                                                                                                                                                                                                                                                                                                                                                                                                                                                                                                                                                                                                                                                                                                                                                                                                                                                                                                                                                                                                                                                                                                                                                                                                                                                                                                                                                                                                                                                                                                                                                                                                                                                                                                                                                                                                                                                                                                                                                                                                                                                                                                                                                                                                                                                                                                                                                                                                                                                                                                                                                                                                                                                                                                                                                                                                                                                                                                                                                                                                                                                                                                                                                                                                                                                                                                                                                                                                                                                                                                                                                                                                                                                                                                                                                                                                                                                                                                                                                                                                                                                                                                                                                                                                                                                                                                                                                                                                                                                                                                                                                                                                                                                                                                                                                                                                                                                                                                                                                                                                                                                                                                                                                                                                                                                                                                                                                                                                                                                                                                                                                                                                                                                                                                                                                                                                                                                                                                                                
CYP337B1v1_JQ995291   TTCTTCTTTTTTGTGGCTGGTGCAGACACCTCTGCTAACACAATGCATTATTCTTTGTTAGAGCTGTCAAACAATCCAAA
CYP337B2v2_JQ995291   TTTGCCTTCTATCTAGCTGGTACAGACACCTCTGCGAATACAATGAATTATACTTTATTGGAACTATCAAACAATCCAAA
CYP337B3v1_JQ995292   TTCTTCTTTTTTGTCGCTGGTGCAGACACCTCTGCTAACACAATGCATTATTCTTTGTTAGAGCTGTCAAACAATCCAAA
CYP337B3v2_KM675664   TTCTTCTTTTTTGTGGCTGGTGCAGACACCTCTGCTAACACAATGCATTATTCTTTGTTAGAGCTGTCAAACAATCCAAA
CYP337B3v3_KM675665   TTCTTCTTTTTTGTGGCTGGTGCAGACACCTCTGCTAACACAATGCATTATTCTTTGTTAGAGCTGTCAAACAATCCAAA
CYP337B3v4_KM675666   TTCTTCTTTTTTGTGGCTGGTGCAGACACCTCTGCTAACACAATGCATTATTCTTTGTTAGAGCTGTCAAACAATCCAAA
CYP337B3v5_KX958388   TTCTTCTTTTTTGTGGCTGGTGCAGACACCTCTGCTAACACAATGCATTATTCTTTGTTAGAGCTGTCAAACAATCCAAA
CYP337B3v6_KX958389   TTCTTCTTTTTTGTGGCTGGTGCAGACACCTCTGCTAACACAATGCATTATTCTTTGTTAGAGCTGTCAAACAATCCAAA
CYP337B3v7_KX958390   TTCTTCTTTTTTGTGGCTGGTGCAGACACCTCTGCTAACACAATGCATTATTCTTTGTTAGAGCTGTCAAACAATCCAAA
CYP337B3v8_KX958391   TTCTTCTTTTTTGTGGCTGGTGCAGACACCTCTGCTAACACAATGCATTATTCTTTGTTAGAGCTGTCAAACAATCCAAA
  CYP337B3_Olathe-2   TTCTTCTTTTTTGTGGCTGGTGCAGACACCTCTGCTAACACAATGCATTATTCTTTGTTAGAGCTGTCAAACAATCCAAA
  CYP337B3_Olathe-6   TTCTTCTTTTTTGTGGCTGGTGCAGACACCTCTGCTAACACAATGCATTATTCTTTGTTAGAGCTGTCAAACAATCCAAA
                      961                                                                                                                                                                                                                                                                                                                                                                                                                                                                                                                                                                                                                                                                                                                                                                                                                                                                                                                                                                                                                                                                                                                                                                                                                                                                                                                                                                                                                                                                                                                                                                                                                                                                                                                                                                                                                                                                                                                                                                                                                                                                                                                                                                                                                                                                                                                                                                                                                                                                                                                                                                                                                                                                                                                                                                                                                                                                                                                                                                                                                                                                                                                                                                                                                                                                                                                                                                                                                                                                                                                                                                                                                                                                                                                                                                                                                                                                                                                                                                                                                                                                                                                                                                                                                                                                                                                                                                                                                                                                                                                                                                                                                                                                                                                                                                                                                                                                                                                                                                                                                                                                                                                                                                                                                                                                                                                                                                                                                                                                                                                                                                                                                                                                                                                                                                                                                                                                                                                                                                                                                                                                                                                                                                                                                                                                                                                                                                                                                                                                                                                                                                                                                                                                                                                                                                                                                                                                                                                                                                                                                                                                                                                                                                                                
CYP337B1v1_JQ995291   AATCTTGGCAAAACTACATGAGGAAATTGACAAAGTTTTCGAAGGCGGAGCTGGGGAACTAACTTATAATGACATTGATA
CYP337B2v2_JQ995291   AATCTTAAGGAAAGTACATGAAGAAATTGACAAAGTTTTCGAAGGCGGAGTTGAAGAATTAAGTTATAATGACATTGATA
CYP337B3v1_JQ995292   AATCTTGGCAAAACTACATGAGGAAATTGACAAAGTTTTCGAAGGCGGAGCTGGGGAACTAACTTATAATGACATTGATA
CYP337B3v2_KM675664   AATCTTGGCAAAACTACATGAGGAAATTGACAAAGTTTTCGAAGGCGGAGCTGGGGAACTAACTTATAATGACATTGATA
CYP337B3v3_KM675665   AATCTTGGCAAAACTACATGAGGAAATTGACAAAGTTTTCGAAGGCGGAGCTGGGGAACTAACTTATAATGACATTGATA
CYP337B3v4_KM675666   AATCTTGGCAAAACTACATGAGGAAATTGACAAAGTTTTCGAAGGCGGAGCTGGGGAACTAACTTATAATGACATTGATA
CYP337B3v5_KX958388   AATCCTGGCAAAACTACACGAAGAAATTGACAAAGTTTTCGAAGGCGGAGCTGGGGAACTAACTTATAATGACATTGATA
CYP337B3v6_KX958389   AATCTTGGCAAAACTACATGAGGAAATTGACAAAGTTTTCGCAGGTGGAGCTGGGGAACTAACTTATAATGACATTGATA
CYP337B3v7_KX958390   AATCTTGGCAAAACTACATGAGGAAATTGACAAAGTTTTCGAAGGCGGAGCTGGGGAACTAACTTATAATGACATTGATA
CYP337B3v8_KX958391   AATCTTGGCAAAACTACATGAGGAAATTGACAAAGTTTTCGAAGGCGGAGCTGGGGAACTAACTTATAATGACATTGATA
  CYP337B3_Olathe-2   AATCTTGGCAAAACTACATGAGGAAATTGACAAAGTTTTCGAAGGCGGAGCTGGGGAACTAACTTATAATGACATTGATA
  CYP337B3_Olathe-6   AATCTTGGCAAAACTACATGAGGAAATTGACAAAGTTTTCGCAGGTGGAGCTGGGGAACTAACTTATAATGACATTGATA
                      1041                                                                                                                                                                                                                                                                                                                                                                                                                                                                                                                                                                                                                                                                                                                                                                                                                                                                                                                                                                                                                                                                                                                                                                                                                                                                                                                                                                                                                                                                                                                                                                                                                                                                                                                                                                                                                                                                                                                                                                                                                                                                                                                                                                                                                                                                                                                                                                                                                                                                
CYP337B1v1_JQ995291   AGTTACAATATTTAGATCAGGTTATAAATGAAGCAATAAGAAAGTATCCTCCCATAGGTGTCATGCAAAGATTGTGTACT
CYP337B2v2_JQ995291   AATTACAATATTTAGACGAAGTAGTTAATGAAGCACTGAGAAAGTATCCTCCAATAGGTTTTATGCAAAGAATGTGTACC
CYP337B3v1_JQ995292   AGTTACAATATTTAGATCAGGTTATAAATGAAGCAATGAGAAAGTATCCTCCCATAGGTGTCATGCAAAGATTGTGTACT
CYP337B3v2_KM675664   AGTTACAATATTTAGATCAGGTTATAAATGAAGCAATGAGAAAGTATCCTCCAGTAGGTGTCATGCAAAGATTGTGTACT
CYP337B3v3_KM675665   AGTTACAATATTTAGATCAGGTTATAAATGAAGCAATGAGAAAGTATCCTCCAGTAGGTGTCATGCAAAGATTGTGTACT
CYP337B3v4_KM675666   AGTTACAATATTTAGATCAGGTTATAAATGAAGCAATGAGAAAGTATCCTCCAGTAGGTGTCATGCAAAGATTGTGTACT
CYP337B3v5_KX958388   AGTTACAATATTTAGATCAGGTTATAAATGAAGCAATGAGAAAGTATCCTCCAGTAGGTGTCATGCAAAGATTGTGCACT
CYP337B3v6_KX958389   AGTTACAATATTTAGATCAGGTTATAAATGAAGCAATGAGAAAGTATCCTCCAGTAGGTGTCATGCAAAGATTGTGTACT
CYP337B3v7_KX958390   AGTTACAATATTTAGATCAGGTTATAAATGAAGCGATGAGAAAGTATCCTCCAGTAGGTGTCATGCAAAGATTGTGCACT
CYP337B3v8_KX958391   AGTTACAATATTTAGATCAGGTTATAAATGAAGCAATGAGAAAGTATCCTCCAGTAGGTGTCATGCAAAGATTGTGTACT
  CYP337B3_Olathe-2   AGTTACAATATTTAGATCAGGTTATAAATGAAGCAATGAGAAAGTATCCTCCAGTAGGTGTCATGCAAAGATTGTGTACT
  CYP337B3_Olathe-6   AGTTACAATATTTAGATCAGGTTATAAATGAAGCAATGAGAAAGTATCCTCCAGTAGGTGTCATGCAAAGATTGTGTACT
                      1121                                                                                                                                                                                                                                                                                                                                                                                                                                                                                                                                                                                                                                                                                                                                                                                                                                                                                                                                                                                                                                                                                                                                                                                                                                                                                                                                                                                                                                                                                                                                                                                                                                                                                                                                                                                                                                                                                                                                                                                                                                                                                                                                                                                                                                                                                                                                                                                                                                                                
CYP337B1v1_JQ995291   AAAGATACAGTTTTACCGTCTGGTATACCCATAGCAAAGGGTAACACAATAATGATTCCAGTGTTCGGTCTTCACAGAGA
CYP337B2v2_JQ995291   AAGGACACAGTTTTGCCATCTGGTTTACCTGTATCAAAAGATGAAATTATCATTGTGCCCCTTTATGGAATCCACAAAGA
CYP337B3v1_JQ995292   AAAGATACAGTTTTACCGTCTGGTATACCCATAGCAAAGGGTAACACAATAATGATTCCAGTGTTCGGTCTTCACAGAGA
CYP337B3v2_KM675664   AAAGATACAGTTTTACCTTCTGGTATACCCATAGCAAAGGGTAACACAATAATGATACCAGTGTTCGGTCTTCACAGAGA
CYP337B3v3_KM675665   AAAGATACAGTTTTACCTTCTGGTATACCCATAGCAAAGGGTAACACAATAATGATTCCAGTGTTCGGTCTTCACAGAGA
CYP337B3v4_KM675666   AAAGATACAGTTTTACCTTCTGGTATACCCATAGCAAAGGGTAACACAATAATGATTCCAGTGTTCGGTCTTCACAGAGA
CYP337B3v5_KX958388   AAAGATACAGTTTTACCTTCTGGTATACCCATAGCAAAGGGTAACACAATAATGATTCCAGTGTTCGGTCTTCACAGAGA
CYP337B3v6_KX958389   AAAGATACGGTTTTACCTTCTGGTATACCCATAGCAAAGGGTAACACAATAATGATACCAGTGTTCGGTCTTCACAGAGC
CYP337B3v7_KX958390   AAAGATACAGTTTTACCTTCTGGTATACCCATAGCAAAAGGTAACACAATAATGATTCCAGTGTTCGGTCTTCACAGAGA
CYP337B3v8_KX958391   AAAGATACAGTTTTACCTTCTGGTATACCCATAGCAAAGGGTAACACAATAATGATTCCAGTGTTCGGTCTTCACAGAGA
  CYP337B3_Olathe-2   AAAGATACAGTTTTACCTTCTGGTATACCCATAGCAAAGGGTAACACAATAATGATACCAGTGTTCGGTCTTCACAGAGA
  CYP337B3_Olathe-6   AAAGATACAGTTTTACCTTCTGGTATACCCATAGCAAAGGGTAACACAATAATGATACCAGTGTTCGGTCTTCACAGAGA
```

```
                      1201                                                                                                                                                                                                                                                                                                                                                                                                                                                                                                                                                                                                                                                                                                                                                                                                                                                                                                                                                                                                                                                                                                                                                                                                                                                                                                                                                                                                                                                                                                                                                                                                                                                                                                                                                                                                                                                                                                                                                                                                                                                                                                                                                                                                                                                                                                                                                                                                                                                                                                                                                                                                                                                                                                                                                                                                                                                                                                                                                                                                                                                                                                                                                                                                                                                                                                                                                                                                                                                                                                                                                                                                                                                                                                                                                                                                                                                                                                                                                                                                                                                                                                                                                                                                                                                                                                                                                                                                                                                                                                                                                                                                                                                                                                                                                                                                                                                                                                                                                                                                                                                                                                                                                                                                                                                                                                                                                                                                                                                                                                                                                                                                                                                                                                                                                                                                                                                                                                                                                                                                                                                                                                                                                                                                                                                                                                                                                                                                                                                                                                                                                                                                                                                                                                                                                                                                                                                                                                                                                                                                                                                                                                                                                                                                                                                                                                                                                                                                                                                                                                                                                                                                                                                                                                                                                                                                                                                                                                                                                                                                                                                                                                                                                                                                                                                                                                                                                                                                                                                                                                                                                                                                                                                                                                                                                                                                                                                
CYP337B1v1_JQ995291   TGAAAAATACTTCGATGACCCACATGTATTTGATCCGGATAGATTTTTACCAGAAAACGTATCCAAAATCAAGAATTACG
CYP337B2v2_JQ995291   CGAACAATACTTTCCTGACCCAGATGTTTTTGATCCGGAGAGATTTTCAGCGGAAAACGTGTCCAAAATCAAGAATTATT
CYP337B3v1_JQ995292   TGAAAAATACTTCGATGACCCACATGTATTTGATCCGGATAGATTTTTACCAGAAAACGTATCCAAAATCAAGAATTACG
CYP337B3v2_KM675664   CGAAAAATACTTTGATGACCCACACGTATTTGATCCGGATAGATTTTCACCAGAAAACGTATCCAAAATCAAGAATTATG
CYP337B3v3_KM675665   CGAAAAATACTTTGATGACCCACACGTATTTGATCCGGATAGATTTGCACCAGAAAACGTATCCAAAATCAAGAATTATG
CYP337B3v4_KM675666   CGAAAAATACTTTGATGACCCACACGTATTTGATCCGGATAGATTTGCACCAGAAAACGTATCCAAAATCAAGAATTATG
CYP337B3v5_KX958388   CGAAAAATACTTTGATGACCCACATGTATTTGATCCGGATAGATTTTTACCAGAAAACGTATCCAAAATCAAGAATTATG
CYP337B3v6_KX958389   CGAAAAATACTTTGATGACCCCCATGTATTTGATCCGGATAGATTTTCACCAGAAACCGTATCCAAAATCAAGAATTATG
CYP337B3v7_KX958390   CGAAAAATACTTCGATGACCCACATGTATTTGATCCGGATAGATTTTCACCAGAAAATGTATCCAAAATCAAGAATTATG
CYP337B3v8_KX958391   CGAAAAATACTTTGATGACCCACACGTATTTGATCCGGATAGATTTGCACCAGAAAACGTATCCAAAATCAAGAATTATG
  CYP337B3_Olathe-2   CGAAAAATACTTTGATGACCCACACGTATTTGATCCGGATAGATTTTCACCAGAAAACGTATCCAAAATCAAGAATTATG
  CYP337B3_Olathe-6   CGAAAAATACTTTGATGACCCACATGTATTTGATCCGGATAGATTTTCACCAGAAAACGTATCCAAAATCAAGAATTATG
                      1281                                                                                                                                                                                                                                                                                                                                                                                                                                                                                                                                                                                                                                                                                                                                                                                                                                                                                                                                                                                                                                                                                                                                                                                                                                                                                                                                                                                                                                                                                                                                                                                                                                                                                                                                                                                                                                                                                                                                                                                                                                                                                                                                                                                                                                                                                                                                                                                                                                                                                                                                                                                                                                                                                                                                                                                                                                                                                                                                                                                                                                                                                                                                                                                                                                                                                                                                                                                                                                                                                                                                                                                                                                                                                                                                                                                                                                                                                                                                                                                                                                                                                                                                                                                                                                                                
CYP337B1v1_JQ995291   CTTATTTACCTTTTGGTGAAGGAAACCGCATTTGTATTGG---------------CCTCCAAGTGAAAGCGGGTCTCGCC
CYP337B2v2_JQ995291   TTTATTTACCTTTTGGTGAAGGAAACCGCGTTTGTATCGGTACACGCTTCGCTCGCCTCCAAGTGAAAGCGGGTCTCGCC
CYP337B3v1_JQ995292   CTTATTTACCTTTTGGTGAAGGAAACCGCATTTGTATTGG---------------CCTCCAAGTGAAAGCGGGTCTCGCC
CYP337B3v2_KM675664   CTTATTTACCTTTTGGTGAAGGAAACCGCATTTGTATTGG---------------CCTCCAAGTGAAAGCGGGTCTCGCC
CYP337B3v3_KM675665   CTTATTTACCTTTTGGTGAAGGAAACCGCATTTGTATTGG---------------CCTCCAAGTGAAAGCGGGTCTCGCC
CYP337B3v4_KM675666   CTTATTTACCTTTTGGTGAAGGAAACCGCATTTGTATTGGTGTACGCTTCGCTCGCCTCCAAGTGAAAGCGGGTCTCGCC
CYP337B3v5_KX958388   CCTATTTACCTTTTGGTGAAGGAAACCGCATTTGTATTGG---------------CCTCCAAGTGAAAGCGGGTCTCGCC
CYP337B3v6_KX958389   CTTATTTACCTTGTGGTGAAGGAAACCGCATTTGTATTGG---------------CCTCCAAGTGAAAGCGGGTCTCGCC
CYP337B3v7_KX958390   CTTATTTACCTTTTGGTGAAGGAAACCGCATTTGTATTGG---------------CCTCCAAGTGAAAGCGGGTCTCGCC
CYP337B3v8_KX958391   CTTATTTACCTTTTGGTGAAGGAAACCGCATTTGTATTGG---------------CCTCCAAGTGAAAGCGGGTCTCGCC
  CYP337B3_Olathe-2   CTTATTTACCTTTTGGTGAAGGAAACCGCATTTGTATTGG---------------CCTCCAAGTGAAAGCGGGTCTCGCC
  CYP337B3_Olathe-6   CTTATTTACCTTTTGGTGAAGGAAACCGCATTTGTATTGG---------------CCTCCAAGTGAAAGCGGGTCTCGCC
                      1361                                                                                                                                                                                                                                                                                                                                                                                                                                                                                                                                                                                                                                                                                                                                                                                                                                                                                                                                                                                                                                                                                                                                                                                                                                                                                                                                                                                                                                                                                                                                                                                                                                                                                                                                                                                                                                                                                                                                                                                                                                                                                                                                                                                                                                                                                                                                                                                                                                                                                                                                                                                                                                                                                                                                                
CYP337B1v1_JQ995291   TGGCTGTTACGTCGTTTTACCTTAGTCGAACAGGACAATTGCATACCAGAATTCGAGAAAAGTCCATTTGGCCTCCGAAG
CYP337B2v2_JQ995291   TGGCTGTTACGTCGTTTCACTTTAGTCGAACAAAACAATTGCGTACCAGAATTCGAGAAAAGTCCATTCGGGCTACGAAG
CYP337B3v1_JQ995292   TGGCTGTTACGTCGTTTTACCTTAGTCGAACAGGACAATTGCATACCAGAATTCGAGAAAAGTCCATTTGGCCTCCGAAG
CYP337B3v2_KM675664   TGGCTGTTACGTCGTTTTACCTTAGTCGAACAGGACAATTGCATACCAGAATTCGAGAAAAGTCCATTTGGCCTCCGAAG
CYP337B3v3_KM675665   TGGTTGTTACGTCGTTTTACTCTAGTCGAACAGGACAATTGCATACCAGAATTCGAGAAAAGTCCATTTGGCCTCCGAAG
CYP337B3v4_KM675666   TGGTTGTTACGTCGTTTTACTCTAGTCGAACAGGACAATTGCATACCAGAATTCGAGAAAAGTCCATTTGGCCTCCGAAG
CYP337B3v5_KX958388   TGGCTGTTGCGTCGTTTTACTCTAGTCGAACAGGACAATTGCGTACCAGAATTCGAGAAAAGTCCATTCGGTCTACGAAG
CYP337B3v6_KX958389   TGGCTGTTACGTCGGTTTACCTTAGTTGAACAGGACAATTGCATACCAGAAATCGAGAAAAGTCCATTTGGTCTACGAAG
CYP337B3v7_KX958390   TGGCTGTTACGTCGTTTTACCTTAGTCGAACAGGACAATTGCATACCAGAATTTGAGAAAAGTCCATTCGGTCTACGAAG
CYP337B3v8_KX958391   TGGTTGTTACGTCGTTTTACTCTAGTCGAACAGGACAATTGCATACCAGAATTCGAGAAAAGTCCATTCGGTCTACGAAG
  CYP337B3_Olathe-2   TGGCTGTTACGTCGTTTTACCTTAGTCGAACAGGACAATTGCATACCAGAATTCGAGAAAAGTCCATTTGGCCTCCGAAG
  CYP337B3_Olathe-6    TGGCTGTTACGTCGGTTTACCTTAGTTGAACAGGACAATTGCATACCAGAATTCGAGAAAAGTCCATTTGGTCTACGAAG
                      1441                                  1480
CYP337B1v1_JQ995291   TCCCGATGCTTGTTATGAATTAAAGTTAAGAGACATATAA
CYP337B2v2_JQ995291   TCCCGATGCTCATTATGAATTTAAGTTAAGAGATATATAA
CYP337B3v1_JQ995292   TCCCGATGCTTGTTATGAATTAAAGTTAAGAGACATATAA
CYP337B3v2_KM675664   TCCCGATGCTCGTTATGAATTAAAGTTAAGAGACATATAA
CYP337B3v3_KM675665   TCCCGATGCTCGTTATGAATTAAAGTTAAGAGACATATAA
CYP337B3v4_KM675666   TCCCGATGCTCGTTATGAATTAAAGTTAAGAGACATATAA
CYP337B3v5_KX958388   TCCCGATGCTCGTTATGAATTAAAGTTAAGAGACATATAA
CYP337B3v6_KX958389   CCCGGATGCTCGTTATGAATTAAAGTTAAGAGACATATAA
CYP337B3v7_KX958390   TCCCGATGCTCGTTATGAATTAAAGTTAAGAGACATATAA
CYP337B3v8_KX958391   TCCCGATGCTCGTTATGAATTAAAGTTAAGAGACATATAA
  CYP337B3_Olathe-2   TCCCGATGCTCGTTATGAATTAAAGTTAAGAGACATATAA
                                                CYP337B3_Olathe-6  CCCCGATGCTCGTTATGAATTAAAGTTAAGAGACATATAA
```

Figure S3. Alignment of the mRNA sequences of cytochrome P450 337B (CYP337B) genes CYP337B1v1, CYP337B2v2, and CYP337B3 alleles v1 through v8 with mRNA sequences extracted from CYP337B3 alleles identified from Olathe, CO population of *Helicoverpa zea*. Identical and conserved nucleotide positions are shown in black text and nucleotide polymorphisms, insertions, and deletions are shown with grey background. Alignment gaps are indicated with a hyphen (-).

```
                                 1                                                          60
CYP337B3v1_JQ995292        (1)   ATGTTGTTCGTGATATTACTCACGATATTAATAGTACTGTGCTCAATAGTGCTCCATTTT
CYP337B3v2_KJ636466        (1)   ATGTTGTTCGTAATATTACTCACGATATTAATAGTACTGTGCTCAATAGTGCTCCATTTC
CYP337B3v3_KM675665        (1)   ATGTTGTTCGTAATATTACTCACGATATTAATAGTACTGTGCTCAATAGTGCTCCATTTC
CYP337B3v4_KM675666        (1)   ATGTTGTTCGTAATATTACTCACGATATTAATAGTACTGTGCTCAATAGTGCTCCATTTC
CYP337B3v5_KX958388        (1)   ATGTTGTTCGTAATATTACTCACGATATTAATAGTACTGTGCTCAATAGTGCTCCATTTC
CYP337B3v6_KX958389        (1)   ATGTTGTTCGTGATATTACTCACGATATTAATAGTACTGTGCTCAATAGTGCTCCATTTC
CYP337B3v7_KX958390        (1)   ATGTTGTTCGTGATATTACTCACGATATTAATAGTACTGTGCTCAATAGTGCTCCATTTC
CYP337B3v8_KX958391        (1)   ATGTTGTTCGTAATATTACTCACGATATTAATAGTACTGTGCTCAATAGTGCTCCATTTC
  CYP337B3_Olathe-2        (1)   ATGTTGTTCGTAATATTACTCACGATATTAATAGTACTGTGCTCAATAGTGCTCCATTTC
  CYP337B3_Olathe-6        (1)   ATGTTGTTCGTAATATTACTCACGATATTAATAGTACTGTGTTCAATAGTGCTCCATTTT
                                 61                                                        120
CYP337B3v1_JQ995292       (61)   AAGTTCACAAACAGCAAATACTGGAAAAAGAAGAATATAATCCAGATAAAAGATTTGACA
CYP337B3v2_KJ636466       (61)   AAGTTCACAAACAGCAAATACTGGAAAAAGAAGAACATTATCCAGATAAAAGATTTGACA
CYP337B3v3_KM675665       (61)   AAGTTCACAAACAGCAAATACTGGAAAAAGAAGAACATTATCCAGATAAAAGATTTGACA
CYP337B3v4_KM675666       (61)   AAGTTCACAAACAGCAAATACTGGAAAAAGAAGAACATTATCCAGATAAAAGATTTGACA
CYP337B3v5_KX958388       (61)   AAGTTCACAAACAGCAAATACTGGAAAAAGAAGAACATTATCCAGATAAAAGATTTGACA
CYP337B3v6_KX958389       (61)   AAGTTCACAAACAGCAAATACTGGAAAAAGAAGAACATTATCCAGATAAAAGATTTGACA
CYP337B3v7_KX958390       (61)   AAGTTCACAAACAGCAAATACTGGAAAAAGAAGAACATAATCCAGATAAAAGATTTGACA
CYP337B3v8_KX958391       (61)   AAGTTCACAAACAGCAAATACTGGAAAAAGAAGAACATAATCCAGATAAAAGACTTGACA
  CYP337B3_Olathe-2       (61)   AAGTTCACAAACAGCAAATACTGGAAAAAGAAGAACATTATCCAGATAAAAGATTTGACA
  CYP337B3_Olathe-6       (61)   AAGTTCACAAACAGCAAATACTGGAAAAAGAAGAATATAATACAGATAAAAGATTTGACA
                                 121                                                       180
CYP337B3v1_JQ995292      (121)   TTCACCTTTCTGTTCAACAAGCAATCGATGCCAGAACTAATCAAATCGATTTACGATAAA
CYP337B3v2_KJ636466      (121)   TTCACCTTTCTGTTCAACAAGCAATCGATGCCAGAACTAATCAAATCGATTTACGATAAA
CYP337B3v3_KM675665      (121)   TTCACCTTTCTGTTCAACAAGCAATCGATGCCAGAACTAATCAAATCGATTTACGATAAA
CYP337B3v4_KM675666      (121)   TTCACCTTTCTGTTCAACAAGCAATCGATGCCAGAACTAATCAAATCGATTTACGATAAA
CYP337B3v5_KX958388      (121)   TTCACCTTTCTGTTCAACAAGCAATCGATGCCAGAACTAATCAAATCGATTTACGATAAA
CYP337B3v6_KX958389      (121)   TTCACCTTTCTGTTCAACAAGCAATCGATGCCAGAACTAATCAAATCGATTTACGATAAA
CYP337B3v7_KX958390      (121)   TTCACCTTTCTGTTCAACAAGCAATCGATGCCAGAACTAATCAAGTCGATTTACGATAAA
CYP337B3v8_KX958391      (121)   TTCACTTTTCTGTTCAACAAGCAATCGATGCCAGAACTAATCAAATCGATTTACGATAAA
  CYP337B3_Olathe-2      (121)   TTCACCTTTCTGTTCAACAAGCAATCGATGCCAGAACTAATCAAATCGATTTACGATAAA
  CYP337B3_Olathe-6      (121)   TTCACCTTTCTGTTCAACAAGCAATCGATGCCAGAACTAATCAAATCGATTTACGATAAA
                                 181                                                       240
CYP337B3v1_JQ995292      (181)   CATGATGAACCGTATATTGGAACGACGTCGGCGACAATACCAACGCTCATTATAAAGAAC
CYP337B3v2_KJ636466      (181)   CATGATGAACCGTATATTGGAACGACGTCGGCGACAATACCAACGCTCATTATAAAGAAC
CYP337B3v3_KM675665      (181)   CATGATGAACCGTATATTGGAACGACGTCGGCGACAATACCAACGCTCATTATAAAGAAC
CYP337B3v4_KM675666      (181)   CATGATGAACCGTATATTGGAACGACGTCGGCGACAATACCAACGCTCATTATAAAGAAC
CYP337B3v5_KX958388      (181)   CATGATGAACCGTATATTGGAACGACGTCCGCGACAATACCAACGCTCATTATAAAGAAC
CYP337B3v6_KX958389      (181)   CATGATGAACCGTATATTGGAACGACGTCCGCGACAATACCAACGCTCATTATAAAGAAC
CYP337B3v7_KX958390      (181)   CATGATGAACCGTATATTGGGACGACGTCGGCGACAATACCAACGCTGATTATAAAGAAC
CYP337B3v8_KX958391      (181)   CATGATGAACCGTATATTGGAACGACGTCCGCGACAATACCAACGCTGATTATAAAGAAC
  CYP337B3_Olathe-2      (181)   CATGATGAACCGTATATTGGAACGACGTCGGCGACAATACCAACGCTCATTATAAAGAAC
  CYP337B3_Olathe-6      (181)   CATAATGAACCGTATATTGGAACGACGTCGGCGACAATACCAACGCTCATTTTAAAGAAC
                                 241                                                       300
CYP337B3v1_JQ995292      (241)   CTCGATGATATTCAAGCAGTGTTAGCTGGTGACTTCCAAAGTTTCTACAGTCGAGGAATA
CYP337B3v2_KJ636466      (241)   CTCGATGATATTCAAGCAGTGTTAGCTGGTGACTTCCAAAGTTTCTACAGTCGAGGAATA
CYP337B3v3_KM675665      (241)   CTCGATGATATTCAAGCAGTGTTAGCTGGTGACTTCCAAAGTTTCTACAGTCGAGGAATA
CYP337B3v4_KM675666      (241)   CTCGATGATATTCAAGCAGTGTTAGCTGGTGACTTCCAAAGTTTCTACAGTCGAGGAATA
CYP337B3v5_KX958388      (241)   CTCGATGATATTCAAGCAGTGTTAGCTGGTGACTTCCAAAGTTTCTACAGTCGAGGAATA
CYP337B3v6_KX958389      (241)   CTCGATGATATTCAAGCAGTGTTAGCTGGTGACTTCCAAAGTTTCTACAGTCGAGGAATA
CYP337B3v7_KX958390      (241)   CTCGATGATATTCAAGCAGTGTTAGCTGGTGACTTCCAAAGTTTCTACAGTCGAGGAATA
CYP337B3v8_KX958391      (241)   CTCGATGATATTCAAGCGGTGTTAGCTGGTGACTTCCAAAGTTTCTACAGTCGAGGAATA
  CYP337B3_Olathe-2      (241)   CTCGATGATATTCAAGCAGTGTTAGCTGGTGACTTCCAAAGTTTCTACAGTCGAGGAATA
  CYP337B3_Olathe-6      (241)   CTCGATGATATTCAAGCAGTGTTAGCTGGTGACTTCCAAAGTTTCTACAGTCGAGGAATA
                                 301                                                       360
CYP337B3v1_JQ995292      (301)   ATAACCAGTCCAAACGATGTGTTAGCTGATAATTTGTTATTAATGGACGACTTCAAAAAA
CYP337B3v2_KJ636466      (301)   ATAACCAGTCCAAACGACGTGTTAGCTGATAATTTGTTATTAATGGACGACTTCAAAAAA
CYP337B3v3_KM675665      (301)   ATAACCAGTCCAAACGATGTGTTAGCTGATAATTTGTTATTAATGGACGACTTCAAAAAA
CYP337B3v4_KM675666      (301)   ATAACCAGTCCAAACGATGTGTTAGCTGATAATTTGTTATTAATGGACGACTTCAAAAAA
CYP337B3v5_KX958388      (301)   ATAACCAGTCCAAACGATGTGTTAGCTGATAATTTGTTATTAATGGACGACTTCAAAAAA
CYP337B3v6_KX958389      (301)   ATAACCAGTCCAAACGATGTGTTAGCTGATAATTTGTTATTAATGGACGACTTCAAAAAA
CYP337B3v7_KX958390      (301)   ATAACCAGTCCAAATGATGTGTTAGCTGATAATTTGTTATTAATGGACGACTTCAAAAAG
CYP337B3v8_KX958391      (301)   ATAACCAGTCCAAACGATGTGTTAGCTGATAATTTGTTATTAATGGACGACTTCAAAAAA
CYP337B3_Olathe-2        (301)   ATAACCAGTCCAAACGACGTGTTAGCTGATAATTTGTTATTAATGGACGACTTCAAAAAA
CYP337B3_Olathe-6        (301)   ATAACCAGTCCAAACGATGTGTTAGCTGATAATTTGTTATTAATGGACGACTTCAAAAAA
```

```
                          361                                                    420
CYP337B3v1_JQ995292  (361) TGGAAACTCATACGACAAAAACTCACTCCAATTTTCACTAGTGCGAAACTCAAAAATATG
CYP337B3v2_KJ636466  (361) TGGAAACTCATACGACAAAAACTCACTCCAATTTTCACTAGTGCGAAACTCAAAAACATG
CYP337B3v3_KM675665  (361) TGGAAACTCATACGACAAAAACTCACTCCAATTTTCACTAGTGCGAAACTCAAAAACATG
CYP337B3v4_KM675666  (361) TGGAAACTCATACGACAAAAACTCACTCCAATTTTCACTAGTGCGAAACTCAAAAACATG
CYP337B3v5_KX958388  (361) TGGAAACTCATACGACAAAAACTCACTCCAATTTTCACTAGTGCGAAACTCAAAAACATG
CYP337B3v6_KX958389  (361) TGGAAACTCATACGACAAAAACTCACTCCAATTTTCACTAGTGCGAAACTCAAAAACATG
CYP337B3v7_KX958390  (361) TGGAAACTCATACGACAAAAACTCACTCCAATTTTCACTAGTGCGAAACTTAAAAACATG
CYP337B3v8_KX958391  (361) TGGAAACTCATACGACAAAAACTCACTCCAATTTTCACTAGTGCGAAACTCAAAAACATG
  CYP337B3_Olathe-2  (361) TGGAAACTCATACGACAAAAACTCACTCCAATTTTCACTAGTGCGAAACTCAAAAACATG
  CYP337B3_Olathe-6  (361) TGGAAACTCATACGACAAAAACTCACTCCAATTTTCACTAGTGCGAAACTCAAAAACATG
                          421                                                    480
CYP337B3v1_JQ995292  (421) TTTTACATCATAGAAAAAAGTGCCCGAGATTTTGTTGAGTTGGTTGAAGATAATGTTCAT
CYP337B3v2_KJ636466  (421) TTTTACATCATAGAAAAAAGTGCCCGAGATTTTGTTGAGTTGGTTGAAGATAATGTTCAT
CYP337B3v3_KM675665  (421) TTTTACATCATAGAAAAAAGTGCCCGAGATTTTGTTGAGCTGGTTGAAGATAATGTTCAT
CYP337B3v4_KM675666  (421) TTTTACATCATAGAAAAAAGTGCCCGAGATTTTGTTGAGTTGGTTGAACATAATGCTTGT
CYP337B3v5_KX958388  (421) TTTTACATCATAGAAAAAAGTGCCCGAGATTTTGTTGAGTTGGTTGAAGATAATGTTCAT
CYP337B3v6_KX958389  (421) TTTTACATCATAGAAAAAAGTGCTCGAGATTTTGTTGAGTTGGTTGAAGATAATGTTCAT
CYP337B3v7_KX958390  (421) TTTTACATCATAGAAAAAAGTGCCCGAGATTTTGTGGAATTGGTTGAACACAATGCTCAT
CYP337B3v8_KX958391  (421) TTTTACATCATAGAAAAAAGTGCCCGAGATTTTGTTGAGTTGGTTGAACATAATGCTTGT
  CYP337B3_Olathe-2  (421) TTTTACATCATAGAAAAAAGTGCCCGAGATTTTGTTGAGTTGGTTGAAGATAATGTTCAT
  CYP337B3_Olathe-6  (421) TTTTACATCATAGAAAAAAGTGCTCGAGATTTTGTTGAGTTGGTTGAAGATAATGTTCAT
                          481                                                    540
CYP337B3v1_JQ995292  (481) CTGCGAAAGAAACCGTTCAAACTTATGACCAGATACACTACAGCGTCTATTAGTGCTGCT
CYP337B3v2_KJ636466  (481) CTGCGAAAGAAACCGTTCAAACTTATGACCAGATACACTACAGCGTCTATTAGTGCTGCA
CYP337B3v3_KM675665  (481) CTGCGAAAGAAACCGTTCAAACTTATGACCAGATACACTACAGCGTCTATTAGTGCTGCA
CYP337B3v4_KM675666  (481) CTGCAAAAGGTTCCATTCAATCTGGTAAGCAGATACACCACAGCATCGATCAGTGCTGCT
CYP337B3v5_KX958388  (481) CTGCGAAAGAAACCGTTCAAACTTATGACCAGATACACTACAGCGTCTATTAGTGCTGCA
CYP337B3v6_KX958389  (481) CTGCGAAAGAAACCGTTCAAACTTATGACCAGATACACTACAGCGTCTATTAGTGCTGCA
CYP337B3v7_KX958390  (481) CTGCGAAAGGTTCCATTCAATTTGATAAGCAGATACACCACAGCATCGATCAGTGCTGCT
CYP337B3v8_KX958391  (481) CTGCAAAAGGTTCCATTCAATCTGGTAAGCAGATACACCACAGCATCGATCAGTGCTGCT
  CYP337B3_Olathe-2  (481) CTGCGAAAGAAACCGTTCAAACTTATGACCAGATACACTACAGCGTCTATTAGTGCTGCA
  CYP337B3_Olathe-6  (481) CTGCGAAAGAAACCGTTCAAACTTATGACCAGATACACTACAGCGTCTATTAGTGCTGCA
                          541                                                    600
CYP337B3v1_JQ995292  (541) GTATTCGGTATAGATACTCAAGTAAAGAGTACCATGGAATCACCATTCGTTGAATTGGCA
CYP337B3v2_KJ636466  (541) GTATTTGGTATAGATACACAAGTAAAGAGTACCATGGAATCACCATTCGTTGAATTGGCA
CYP337B3v3_KM675665  (541) GTATTTGGTATAGATACACAAGTAAAGAGTACCATGGAATCACCATTCGTTGAATTGGCA
CYP337B3v4_KM675666  (541) GTATTCGGTATAGATACTCAAGTAAAGAGTACCATGGAATCACCATTCGTTGAATTGGCA
CYP337B3v5_KX958388  (541) GTATTTGGTATAGATACTCAAGTGAAGAGTACCATGGAATCACCATTCGTTGAATTGGCA
CYP337B3v6_KX958389  (541) GTATTTGGTATAGATACTCAAGTAAAGAGTACCATGGAATCACCATTCGTTGAATTGGCA
CYP337B3v7_KX958390  (541) GTATTCGGTATAGATACTCAAGTAAAGAGTACCATGGAATCACCATTCGTTGAATTAGCA
CYP337B3v8_KX958391  (541) GTATTCGGTATAGATACTCAAGTAAAGAGTACCATGGAATCACCATTCGTTGAATTGGCA
  CYP337B3_Olathe-2  (541) GTATTTGGTATAGATACACAAGTAAAGAGTACCATGGAATCACCATTCGTTGAATTGGCA
  CYP337B3_Olathe-6  (541) GTATTTGGTATAGATACTCAAGTAAAGAGTACCATGGAATCACCATTCGTTGAATTGGCA
                          601                                                    660
CYP337B3v1_JQ995292  (601) TTTAGAGCTTTACGACCATCGTTTATTCAAAATGTAATAGTTGTTATTGCAAATACTTTC
CYP337B3v2_KJ636466  (601) TTTAGAGCTTTACGACCATCGTTTATTCAAAATGTAATAGTTGTTATTGCAAATACTTTC
CYP337B3v3_KM675665  (601) TTTAGAGCTTTACGACCATCGTTTATTCAAAATGTAATAGTTGTTATTGCAAATACTTTC
CYP337B3v4_KM675666  (601) TTTAGAGCTTTACGACCATCGTTTATTCAAAATGTAATAGTTGTTATTGCAAATACTTTC
CYP337B3v5_KX958388  (601) TTTAGAGCTTTGCGACCATCGTTTATTCAAAATGTAATAGTTGTTATTGCAAATACTTTC
CYP337B3v6_KX958389  (601) TTTAGAGCTTTACGACCATCGTTTATTCAAAATGTAATAGTTGTTATTGCAAATACTTTC
CYP337B3v7_KX958390  (601) TTTAGAGCTTTACGACCATCGTTTATTCAAAATGTAATAGTTGTTATTGCAAATACTTTC
CYP337B3v8_KX958391  (601) TTTAGAGCTTTACGACCATCGTTTATTCAAAATGTAATAGTTGTTATTGCAAATACTTTC
  CYP337B3_Olathe-2  (601) TTTAGAGCTTTACGACCATCGTTTATTCAAAATGTAATAGTTGTTATTGCAAATACTTTC
  CYP337B3_Olathe-6  (601) TTTAGAGCTTTACGACCATCGTTTATTCAAAATGTAATAGTTGTTATTGCAAATACTTTC
                          661                                                    720
CYP337B3v1_JQ995292  (661) CCTAGATTGTACAAACTCTTGCAGTTGAAACTTTTTGGTGAACATGAAGAATTTTTTGTG
CYP337B3v2_KJ636466  (661) CCTAGATTGTACAAACTCTTGCAGTTGAAACTTTTTGGTGAACATGAAGAATTTTTTGTG
CYP337B3v3_KM675665  (661) CCTAGATTGTACAAACTCTTGCAGTTGAAACTTTTTGGTGAACATGAAGAATTTTTTGTG
CYP337B3v4_KM675666  (661) CCTAGATTGTACAAACTCTTGCAGTTAAAACTTTTTGGTGAACATGAAGAATTTTTTGTG
CYP337B3v5_KX958388  (661) CCTAGATTGTACAAACTCTTGCAGTTGAAACTTTTTGGTGAACATGAAGAATTTTTTGTG
CYP337B3v6_KX958389  (661) CCTAGATTGTACAAACTCTTGCAGTTGAAACTTTTTGGTGAACATGAAGAATTTTTTGTG
CYP337B3v7_KX958390  (661) CCTAGATTGTACAAACTCTTGCAGTTGAAACTTTTTGGTGAACATGAAGAATTTTTTGTG
CYP337B3v8_KX958391  (661) CCTAGATTGTACAAACTCTTGCAGTTGAAACTTTTTGGTGAACATGAAGAATTTTTTGTG
  CYP337B3_Olathe-2  (661) CCTAGATTGTACAAACTCTTGCAGTTGAAACTTTTTGGTGAACATGAAGAATTTTTTGTG
  CYP337B3_Olathe-6  (661) CCTAGATTGTACAAACTCTTGCAGTTGAAACTTTTTGGTGAACATGAAGAATTTTTTGTG
```

```
                          721                                                    780
CYP337B3v1_JQ995292  (721) GGTGCAGTGAAAACTGTTTTAGAAAGTAGGAGGCATGATACTACTAAAAGATATGATTTT
CYP337B3v2_KJ636466  (721) GGTGCAGTGAAAACTGTTTTAGAAAGTAGGAGGCATGATACTACTAAAAGATATGATTTT
CYP337B3v3_KM675665  (721) GGTGCAGTGAAAACTGTTTTAGAAAGTAGGAGGCATGATACTACTAAAAGATATGATTTT
CYP337B3v4_KM675666  (721) GGTGCAGTGAAAACTGTTTTAGAAAGTAGGAGGCATGATACTACTAAAAGATATGATTTT
CYP337B3v5_KX958388  (721) GGTGCAGTGAAAACTGTTTTAGAAAGTAGGAGGCATGATACTACTAAAAGATATGATTTT
CYP337B3v6_KX958389  (721) GGGGCAGTGAAAACTGTTTTAGAAAGTAGGAGGCATGATACTACTAAAAGATATGATTTT
CYP337B3v7_KX958390  (721) GGTGCAGTGAAAACTGTTTTAGAAAGTAGGAGGCATGATACTACTAAAAGATATGATTTT
CYP337B3v8_KX958391  (721) GGTGCAGTGAAAACTGTTTTAGAAAGTAGGAGGCATGATACTACTAAAAGATATGATTTT
  CYP337B3_Olathe-2  (721) GGTGCAGTGAAAACTGTTTTAGAAAGTAGGAGGCATGATACTACTAAAAGATATGATTTT
  CYP337B3_Olathe-6  (721) GGGGCAGTGAAAACTGTTTTAGAAAGTAGGAGGCATGATACTACTAAAAGATATGATTTT
                          781                                                    840
CYP337B3v1_JQ995292  (781) ATTGAGATTTGCTTGGAACTACAGAAGAATGGAATAATGCAGGACTTCTCAACTGGATAT
CYP337B3v2_KJ636466  (781) ATTGAGATTTGCTTGGAACTACAGAAGAATGGAATAATGCAGGACTTTTCAACTGGATAT
CYP337B3v3_KM675665  (781) ATTGAGATTTGCTTGGAACTACAGAAGAATGGAATAATGCAGGACTTCTCAACTGGATAT
CYP337B3v4_KM675666  (781) ATTGAGATTTGCTTGGAACTACAGAAGAATGGAATAATGCAGGACTTCTCAACTGGATAT
CYP337B3v5_KX958388  (781) ATTGAGATTTGCTTGGAACTACAGAAGAATGGAATAATGCAGGACTTCTCAACTGGTTAT
CYP337B3v6_KX958389  (781) ATTGAGATTTGCTTGGAACTACAGAAGAATGGAATAATGCAGGACTTTTCAACTGGATAT
CYP337B3v7_KX958390  (781) ATTGAGATTTGCTTGGAACTACAGAAGAATGGAATAATGCAGGACTTCTCAACTGGATAT
CYP337B3v8_KX958391  (781) ATTGAGATTTGCTTGGAACTACAGAAGAATGGAATAATGCAGGACTTCTCAACTGGATAT
  CYP337B3_Olathe-2  (781) ATTGAGATTTGCTTGGAACTACAGAAGAATGGAATAATGCAGGACTTTTCAACTGGATAT
  CYP337B3_Olathe-6  (781) ATTGAGATTTGCTTGGAACTACAGAAGAATGGAATAATGCAGGACTTTTCAACTGGATAT
                          841                                                    900
CYP337B3v1_JQ995292  (841) AAATTGGAGCCGACCGACGAACTGATGGCTGCTCAAGCATTCTTCTTTTTTGTCGCTGGT
CYP337B3v2_KJ636466  (841) AAATTGGAGCCGACCGACGAACTGATGGCTGCTCAAGCATTCTTCTTTTTTGTGGCTGGT
CYP337B3v3_KM675665  (841) AAATTGGAGCCGACCGACGAACTGATGGCTGCTCAAGCATTCTTCTTTTTTGTGGCTGGT
CYP337B3v4_KM675666  (841) AAATTGGAGCCGACTGACGAACTGATGGCTGCTCAAGCATTCTTCTTTTTTGTGGCTGGT
CYP337B3v5_KX958388  (841) AAATTGGAGCCAACCGACGAACTGATGGCTGCTCAAGCATTCTTCTTTTTTGTGGCTGGT
CYP337B3v6_KX958389  (841) AAATTGGAGCCGACCGACGAACTGATGGCTGCTCAAGCATTCTTCTTTTTTGTGGCTGGT
CYP337B3v7_KX958390  (841) AAGTTGGAGCCGACCGACGAACTGATGGCTGCTCAAGCATTCTTCTTTTTTGTGGCTGGT
CYP337B3v8_KX958391  (841) AAATTGGAGCCGACTGACGAACTGATGGCTGCTCAAGCATTCTTCTTTTTTGTGGCTGGT
  CYP337B3_Olathe-2  (841) AAATTGGAGCCGACCGACGAACTGATGGCTGCTCAAGCATTCTTCTTTTTTGTGGCTGGT
  CYP337B3_Olathe-6  (841) AAATTGGAGCCGACCGACGAACTGATGGCTGCTCAAGCATTCTTCTTTTTTGTGGCTGGT
                          901                                                    960
CYP337B3v1_JQ995292  (901) GCAGACACCTCTGCTAACACAATGCATTATTCTTTGTTAGAGCTGTCAAACAATCCAAAA
CYP337B3v2_KJ636466  (901) GCAGACACCTCTGCTAACACAATGCATTATTCTTTGTTAGAGCTGTCAAACAATCCAAAA
CYP337B3v3_KM675665  (901) GCAGACACCTCTGCTAACACAATGCATTATTCTTTGTTAGAGCTGTCAAACAATCCAAAA
CYP337B3v4_KM675666  (901) GCAGACACCTCTGCTAACACAATGCATTATTCTTTGTTAGAGCTGTCAAACAATCCAAAA
CYP337B3v5_KX958388  (901) GCAGACACCTCTGCTAACACAATGCATTATTCTTTGTTAGAGCTGTCAAACAATCCAAAA
CYP337B3v6_KX958389  (901) GCAGACACCTCTGCTAACACAATGCATTATTCTTTGTTAGAGCTGTCAAACAATCCAAAA
CYP337B3v7_KX958390  (901) GCAGACACCTCTGCTAACACAATGCATTATTCTTTGTTAGAGCTGTCAAACAATCCAAAA
CYP337B3v8_KX958391  (901) GCAGACACCTCTGCTAACACAATGCATTATTCTTTGTTAGAGCTGTCAAACAATCCAAAA
  CYP337B3_Olathe-2  (901) GCAGACACCTCTGCTAACACAATGCATTATTCTTTGTTAGAGCTGTCAAACAATCCAAAA
  CYP337B3_Olathe-6  (901) GCAGACACCTCTGCTAACACAATGCATTATTCTTTGTTAGAGCTGTCAAACAATCCAAAA
                          961                                                   1020
CYP337B3v1_JQ995292  (961) ATCTTGGCAAAACTACATGAGGAAATTGACAAAGTTTTCGAAGGCGGAGCTGGGGAACTA
CYP337B3v2_KJ636466  (961) ATCTTGGCAAAACTACATGAGGAAATTGACAAAGTTTTCGAAGGCGGAGCTGGGGAACTA
CYP337B3v3_KM675665  (961) ATCTTGGCAAAACTACATGAGGAAATTGACAAAGTTTTCGAAGGCGGAGCTGGGGAACTA
CYP337B3v4_KM675666  (961) ATCTTGGCAAAACTACATGAGGAAATTGACAAAGTTTTCGAAGGCGGAGCTGGGGAACTA
CYP337B3v5_KX958388  (961) ATCCTGGCAAAACTACACGAAGAAATTGACAAAGTTTTCGAAGGCGGAGCTGGGGAACTA
CYP337B3v6_KX958389  (961) ATCTTGGCAAAACTACATGAGGAAATTGACAAAGTTTTCGCAGGTGGAGCTGGGGAACTA
CYP337B3v7_KX958390  (961) ATCTTGGCAAAACTACATGAGGAAATTGACAAAGTTTTCGAAGGCGGAGCTGGGGAACTA
CYP337B3v8_KX958391  (961) ATCTTGGCAAAACTACATGAGGAAATTGACAAAGTTTTCGAAGGCGGAGCTGGGGAACTA
  CYP337B3_Olathe-2  (961) ATCTTGGCAAAACTACATGAGGAAATTGACAAAGTTTTCGAAGGCGGAGCTGGGGAACTA
  CYP337B3_Olathe-6  (961) ATCTTGGCAAAACTACATGAGGAAATTGACAAAGTTTTCGCAGGTGGAGCTGGGGAACTA
                          1021                                                  1080
CYP337B3v1_JQ995292 (1021) ACTTATAATGACATTGATAAGTTACAATATTTAGATCAGGTTATAAATGAAGCAATGAGA
CYP337B3v2_KJ636466 (1021) ACTTATAATGACATTGATAAGTTACAATATTTAGATCAGGTTATAAATGAAGCAATGAGA
CYP337B3v3_KM675665 (1021) ACTTATAATGACATTGATAAGTTACAATATTTAGATCAGGTTATAAATGAAGCAATGAGA
CYP337B3v4_KM675666 (1021) ACTTATAATGACATTGATAAGTTACAATATTTAGATCAGGTTATAAATGAAGCAATGAGA
CYP337B3v5_KX958388 (1021) ACTTATAATGACATTGATAAGTTACAATATTTAGATCAGGTTATAAATGAAGCAATGAGA
CYP337B3v6_KX958389 (1021) ACTTATAATGACATTGATAAGTTACAATATTTAGATCAGGTTATAAATGAAGCAATGAGA
CYP337B3v7_KX958390 (1021) ACTTATAATGACATTGATAAGTTACAATATTTAGATCAGGTTATAAATGAAGCGATGAGA
CYP337B3v8_KX958391 (1021) ACTTATAATGACATTGATAAGTTACAATATTTAGATCAGGTTATAAATGAAGCAATGAGA
  CYP337B3_Olathe-2 (1021) ACTTATAATGACATTGATAAGTTACAATATTTAGATCAGGTTATAAATGAAGCAATGAGA
  CYP337B3_Olathe-6 (1021) ACTTATAATGACATTGATAAGTTACAATATTTAGATCAGGTTATAAATGAAGCAATGAGA
```

```
                                 1081                                                    1140
CYP337B3v1_JQ995292  (1081) AAGTATCCTCCCATAGGTGTCATGCAAAGATTGTGTACTAAAGATACAGTTTTACCGTCT
CYP337B3v2_KJ636466  (1081) AAGTATCCTCCAGTAGGTGTCATGCAAAGATTGTGTACTAAAGATACAGTTTTACCTTCT
CYP337B3v3_KM675665  (1081) AAGTATCCTCCAGTAGGTGTCATGCAAAGATTGTGTACTAAAGATACAGTTTTACCTTCT
CYP337B3v4_KM675666  (1081) AAGTATCCTCCAGTAGGTGTCATGCAAAGATTGTGTACTAAAGATACAGTTTTACCTTCT
CYP337B3v5_KX958388  (1081) AAGTATCCTCCAGTAGGTGTCATGCAAAGATTGTGCACTAAAGATACAGTTTTACCTTCT
CYP337B3v6_KX958389  (1081) AAGTATCCTCCAGTAGGTGTCATGCAAAGATTGTGTACTAAAGATACGGTTTTACCTTCT
CYP337B3v7_KX958390  (1081) AAGTATCCTCCAGTAGGTGTCATGCAAAGATTGTGCACTAAAGATACAGTTTTACCTTCT
CYP337B3v8_KX958391  (1081) AAGTATCCTCCAGTAGGTGTCATGCAAAGATTGTGTACTAAAGATACAGTTTTACCTTCT
  CYP337B3_Olathe-2  (1081) AAGTATCCTCCAGTAGGTGTCATGCAAAGATTGTGTACTAAAGATACAGTTTTACCTTCT
  CYP337B3_Olathe-6  (1081) AAGTATCCTCCAGTAGGTGTCATGCAAAGATTGTGTACTAAAGATACAGTTTTACCTTCT
                                 1141                                                    1200
CYP337B3v1_JQ995292  (1141) GGTATACCCATAGCAAAGGGTAACACAATAATGATTCCAGTGTTCGGTCTTCACAGAGAT
CYP337B3v2_KJ636466  (1141) GGTATACCCATAGCAAAGGGTAACACAATAATGATACCAGTGTTCGGTCTTCACAGAGAC
CYP337B3v3_KM675665  (1141) GGTATACCCATAGCAAAGGGTAACACAATAATGATTCCAGTGTTCGGTCTTCACAGAGAC
CYP337B3v4_KM675666  (1141) GGTATACCCATAGCAAAGGGTAACACAATAATGATTCCAGTGTTCGGTCTTCACAGAGAC
CYP337B3v5_KX958388  (1141) GGTATACCCATAGCAAAGGGTAACACAATAATGATTCCAGTGTTCGGTCTTCACAGAGAC
CYP337B3v6_KX958389  (1141) GGTATACCCATAGCAAAGGGTAACACAATAATGATACCAGTGTTCGGTCTTCACAGAGCC
CYP337B3v7_KX958390  (1141) GGTATACCCATAGCAAAAGGTAACACAATAATGATTCCAGTGTTCGGTCTTCACAGAGAC
CYP337B3v8_KX958391  (1141) GGTATACCCATAGCAAAGGGTAACACAATAATGATTCCAGTGTTCGGTCTTCACAGAGAC
  CYP337B3_Olathe-2  (1141) GGTATACCCATAGCAAAGGGTAACACAATAATGATACCAGTGTTCGGTCTTCACAGAGAC
  CYP337B3_Olathe-6  (1141) GGTATACCCATAGCAAAGGGTAACACAATAATGATACCAGTGTTCGGTCTTCACAGAGAC
                                 1201                                                    1260
CYP337B3v1_JQ995292  (1201) GAAAAATACTTCGATGACCCACATGTATTTGATCCGGATAGATTTTTACCAGAAAACGTA
CYP337B3v2_KJ636466  (1201) GAAAAATACTTTGATGACCCACACGTATTTGATCCGGATAGATTTTCACCAGAAAACGTA
CYP337B3v3_KM675665  (1201) GAAAAATACTTTGATGACCCACACGTATTTGATCCGGATAGATTTGCACCAGAAAACGTA
CYP337B3v4_KM675666  (1201) GAAAAATACTTTGATGACCCACACGTATTTGATCCGGATAGATTTGCACCAGAAAACGTA
CYP337B3v5_KX958388  (1201) GAAAAATACTTTGATGACCCACATGTATTTGATCCGGATAGATTTTTACCAGAAAACGTA
CYP337B3v6_KX958389  (1201) GAAAAATACTTTGATGACCCCCATGTATTTGATCCGGATAGATTTTCACCAGAAACCGTA
CYP337B3v7_KX958390  (1201) GAAAAATACTTCGATGACCCACATGTATTTGATCCGGATAGATTTTCACCAGAAAATGTA
CYP337B3v8_KX958391  (1201) GAAAAATACTTTGATGACCCACACGTATTTGATCCGGATAGATTTGCACCAGAAAACGTA
  CYP337B3_Olathe-2  (1201) GAAAAATACTTTGATGACCCACACGTATTTGATCCGGATAGATTTTCACCAGAAAACGTA
  CYP337B3_Olathe-6  (1201) GAAAAATACTTTGATGACCCACATGTATTTGATCCGGATAGATTTTCACCAGAAAACGTA
                                 1261                                                    1320
CYP337B3v1_JQ995292  (1261) TCCAAAATCAAGAATTACGCTTATTTACCTTTTGGTGAAGGAAACCGCATTTGTATTGGT
CYP337B3v2_KJ636466  (1261) TCCAAAATCAAGAATTATGCTTATTTACCTTTTGGTGAAGGAAACCGCATTTGTATTGGT
CYP337B3v3_KM675665  (1261) TCCAAAATCAAGAATTATGCTTATTTACCTTTTGGTGAAGGAAACCGCATTTGTATTGGT
CYP337B3v4_KM675666  (1261) TCCAAAATCAAGAATTATGCTTATTTACCTTTTGGTGAAGGAAACCGCATTTGTATTGGT
CYP337B3v5_KX958388  (1261) TCCAAAATCAAGAATTATGCCTATTTACCTTTTGGTGAAGGAAACCGCATTTGTATTGGT
CYP337B3v6_KX958389  (1261) TCCAAAATCAAGAATTATGCTTATTTACCTTGTGGTGAAGGAAACCGCATTTGTATTGGT
CYP337B3v7_KX958390  (1261) TCCAAAATCAAGAATTATGCTTATTTACCTTTTGGTGAAGGAAACCGCATTTGTATTGGT
CYP337B3v8_KX958391  (1261) TCCAAAATCAAGAATTATGCTTATTTACCTTTTGGTGAAGGAAACCGCATTTGTATTGGT
  CYP337B3_Olathe-2  (1261) TCCAAAATCAAGAATTATGCTTATTTACCTTTTGGTGAAGGAAACCGCATTTGTATTGGT
  CYP337B3_Olathe-6  (1261) TCCAAAATCAAGAATTATGCTTATTTACCTTTTGGTGAAGGAAACCGCATTTGTATTGGT
                                 1321                                                    1380
CYP337B3v1_JQ995292  (1321) GAGTA----TTAAACATTTATACATATGTATTGTTAATATTG-TAAATATA---------
CYP337B3v2_KJ636466  (1321) GAGTACCTATTAAACATCTATACATATGTATTGTTAATCTTCATATATATAAAAATGAAT
CYP337B3v3_KM675665  (1321) GAGTA----TTCAACATTTACTTATAACT--------TAATT-TAAATATA---------
CYP337B3v4_KM675666  (1321) GAGTA----TTCAACATTTACTTATAACT--------TAATT-TAAATATA---------
CYP337B3v5_KX958388  (1321) GAGTA----CTAAACATTTACTTATACATAT----------A----ATATA---------
CYP337B3v6_KX958389  (1321) GAGTACCTATTAAACATCTATACATATGTATTGTTAATCTTCATATATATAAAAATGAAT
CYP337B3v7_KX958390  (1321) GAGTA----TTAAACATTTATACATATGTATTGTTAATATTG-TAAATATA---------
CYP337B3v8_KX958391  (1321) GAGTA----TTCAACATTTACTTATAACT--------TAATT-TAAATATA---------
  CYP337B3_Olathe-2  (1321) GAGTACCTATTAAACATCTATACATATGTATTGTTAATCTTCATATATATAAAAATGAAT
  CYP337B3_Olathe-6  (1321) GAGTACCTATTAAACATCTATACATATGTATTGTTAATCTTCATATATATAAAAATGAAT
```

```
                                  1381                                                    1440
CYP337B3v1_JQ995292   (1367) ---TATGTGTAACTCATAC------------------------ATTT-------------
CYP337B3v2_KJ636466   (1381) TGCTGTTCGTTAGTCTTACTAAAACTCGAGTATGGCTGGACCGATTTGGCTTATTTTGGT
CYP337B3v3_KM675665   (1359) ---TTTTTGTAACTT-TAT------------------------ATTT-------------
CYP337B3v4_KM675666   (1359) ---TTTTTGTAACTT-TAT------------------------ATTT-------------
CYP337B3v5_KX958388   (1354) ---TTTTTGTAACATTTGTAA-----------------C----ATTT-------------
CYP337B3v6_KX958389   (1381) TGCTGTTCGTTAGTCTTACTAAAACTCGAGTATGGCTGGACCGATTTGGCTTATTTTGGT
CYP337B3v7_KX958390   (1367) ---TTTGTGTAACTCATAC------------------------ATTT-------------
CYP337B3v8_KX958391   (1359) ---TTTTTGTAACTT-TAT------------------------ATTT-------------
  CYP337B3_Olathe-2   (1381) TGCTGTTCGTTAGTCTTACTAAAACTCGAGTATGGCTGGACCGATTTGGCTTATTTTGGT
  CYP337B3_Olathe-6   (1381) TGCTGTTCGTTAGTCTTACTAAAACTCGAGTATGGCTGGACCGATTTGGCTTATTTTGGT
                                  1441                                                    1500
CYP337B3v1_JQ995292   (1387) ------AAGATTGTAGTG--------AAGGCATAAAT-----------------------
CYP337B3v2_KJ636466   (1441) GTTAAAATGTTTGTAGAGGTCCAGGGAAGGTATAAACGATACGAAGTTTGCGGGATCAGC
CYP337B3v3_KM675665   (1378) ------AAGGTTCTAGAG--------AAGGCATAAAT-----------------------
CYP337B3v4_KM675666   (1378) ------AAGGTTCTAGAG--------AAGGCATAAAT-----------------------
CYP337B3v5_KX958388   (1377) ------AAGGTTCTAGAG--------AAGGCATAAAT-----------------------
CYP337B3v6_KX958389   (1441) GTTAAAATGTTTGTAGAGGTCCAGGGAAGGTTTAAACGATACGAAGTTTGCGGGATCACC
CYP337B3v7_KX958390   (1387) ------AAGATTCTAGTG--------AAGGCATAAAT-----------------------
CYP337B3v8_KX958391   (1378) ------AAGGTTCTAGAG--------AAGGCATAAAT-----------------------
  CYP337B3_Olathe-2   (1441) GTTAAAATGTTTGTAGAGGTCCAGGGAAGGTATAAACGATACGAAGTTTGCGGGATCAGC
  CYP337B3_Olathe-6   (1441) GTTAAAATGTTTGTAGAGGTCCAGGGAAGGTTTAAACGATACGAAGTTTGCGGGATCACC
                                  1501                                                    1560
CYP337B3v1_JQ995292   (1410) --------------------------------CTTATTTAGCTTTGATCAGTTATTCTGAA
CYP337B3v2_KJ636466   (1501) TAGTATTGTAAATATATTTGTGTAACTTATACTTGTTTAGCTTTGATCAGTTATTCTAAA
CYP337B3v3_KM675665   (1401) --------------------------------CTTATTTAGCTTTGATCAGTTATTCTAAA
CYP337B3v4_KM675666   (1401) --------------------------------CTTATTTAGCTTTGATCAGTTATTCTAAA
CYP337B3v5_KX958388   (1400) --------------------------------CTTATTTAGCTTTGATCAGTTATTCTAAA
CYP337B3v6_KX958389   (1501) TAGTATTGTAAATATATTTGTGTAACTTATACTTATTTAGCTTTGATCAGTTATTCTAAA
CYP337B3v7_KX958390   (1410) --------------------------------CTTATTTAG--------------------
CYP337B3v8_KX958391   (1401) --------------------------------CTTATTTAGCTTTGATCAGTTATTCTAAA
  CYP337B3_Olathe-2   (1501) TAGTATTGTAAATATATTTGTGTAACTTATACTTGTTTAGCTTTGATCAGTTATTCTAAA
  CYP337B3_Olathe-6   (1501) TAGTATTGTAAATATATTTGTGTAACTTATACTTATTTAGCTTTGATCAGTTATTCTAAA
                                  1561                                                    1620
CYP337B3v1_JQ995292   (1439) GTAGGTACCTAGTACGCAATGGGCGTGCTAGTCTTTTTATGGCCCAAAACAATTGTTCAA
CYP337B3v2_KJ636466   (1561) GAAGGTACCTATTACGCAATGTGCGTCCTAGTCTTTTTATGGATCAAAACAATTGTTCAA
CYP337B3v3_KM675665   (1430) GTAGGTACCTAGTACGCAATGGGCGTGCTAGTCTTTTTATGGCCCAAAACAATTGTTCAA
CYP337B3v4_KM675666   (1430) GTAGGTACCTAGTACGCAATGGGCGTGCTAGTCTTTTTATGGCCCAAAACAATTGTTCAA
CYP337B3v5_KX958388   (1429) GAAGGTACCTAGTATGCAATGGGCGTGCTAGTCTTTTTATGGCCTAAAGCAATTGTTCAA
CYP337B3v6_KX958389   (1561) GAAGGTACCTATTACGCAATGTGCGTCCTAGTCTTTTTATGGATCAAAACAATTGTTCAA
CYP337B3v7_KX958390   (1419) ---G-TACCTAGTACGCAACGGGCGTGCTAGTCTTTTTATGGTTCAAAACAATTGTTCAA
CYP337B3v8_KX958391   (1430) GTAGGTACCTAGTACGCAATGGGCGTGCTAGTCTTTTTATGGCCCAAAACAATTGTTCAA
  CYP337B3_Olathe-2   (1561) GAAGGTACCTATTACGCAATGTGCGTCCTAGTCTTTTTATGGATCAAAACAATTGTTCAA
  CYP337B3_Olathe-6   (1561) GAAGGTACCTATTACGCAATGTGCGTCCTAGTCTTTTTATGGATCAAAACAATTGTTCAA
                                  1621                                                    1680
CYP337B3v1_JQ995292   (1499) TGAACGGTCATAATCTTCCATACTTATTCCACCCCATTCATTCAATCATTGTCTCATAGT
CYP337B3v2_KJ636466   (1621) TGATCGACCATAATCTTCAATACTTATTCTACCCCATTCATTCAATCATTGTGTCATATT
CYP337B3v3_KM675665   (1490) TGAACGGTCATAATCTTCCATACTTATTCCACCCCATTCATTCAATCATTGTCTCATATT
CYP337B3v4_KM675666   (1490) TGAACGGTCATAATCTTCCATACTTATTCCACCCCATTCATTCAATCATTGTCTCATATT
CYP337B3v5_KX958388   (1489) TGATCGACCATAATCATCAATACTTATTCCACCCCATTCATTCAATCATTGTCTCATATT
CYP337B3v6_KX958389   (1621) TGATCGACCATAATGATCACTACTTATTCTACCCCATTCATTCAATCATTGTCTCATAGT
CYP337B3v7_KX958390   (1475) TGATCGACCATAATCATCAATACTTATTCTACCCCATTCATTCAATCATTGTCTCATAGT
CYP337B3v8_KX958391   (1490) TGAACGGTCATAATCTTCCATACTTATTCCACCCCATTCATTCAATCATTGTCTCATATT
  CYP337B3_Olathe-2   (1621) TGATCGACCATAATCTTCAATACTTATTCTACCCCATTCATTCAATCATTGTGTCATATT
  CYP337B3_Olathe-6   (1621) TGATCGACCATAATGATCACTACTTATTCTACCCCATTCATTCAATCATTGTCTCATAGT
                                  1681                                                    1740
CYP337B3v1_JQ995292   (1559) AAGTAGTCATAAAAATACATAAATGAATAGTTATCATTCCTTTTGTTTAGTTTT-ACTAA
CYP337B3v2_KJ636466   (1681) AAGAAGTCATAAAAATACATATATGAATAGTTATCATTCCCTTTGTTTAGTTTT-ACTAA
CYP337B3v3_KM675665   (1550) AAGTAGTCATAAAAATACATAAATGAATAGTTATCATTCCCTTTGTTTAGTTTT-ACTAA
CYP337B3v4_KM675666   (1550) AAGTAGTCATAAAAATACATAAATGAATAGTTATCATTCCCTTTGTTTAGTTTT-ACTAA
CYP337B3v5_KX958388   (1549) AAG-AGTCATAAAAATACATAAATGAATAGTTATCATTCCCTTTGTTTAGTTTT-ACTAA
CYP337B3v6_KX958389   (1681) AAGTAGTCATAAAAATACATAAATGAATGGT-ATCATTCCCTTTGTTTAGTTTTTACATA
CYP337B3v7_KX958390   (1535) AAGTAATCATAAAAATACATAAATGAATGGTTATCATTCCCTTTGTTTAGTTTT-ACTAA
CYP337B3v8_KX958391   (1550) AAGTAGTCATAAAAATACATAAATGAATAGTTATCATTCCCTTTGTTTAGTTTT-ACTAA
  CYP337B3_Olathe-2   (1681) AAGAAGTCATAAAAATACATATATGAATAGTTATCATTCCCTTTGTTTAGTTTT-ACTAA
  CYP337B3_Olathe-6   (1681) AAGTAGTCATAAAAATACATAAATGAATGGT-ATCATTCCCTTTGTTTAGTTTT-ACATA
```

```
CYP337B3v1_JQ995292  (1618) TTGCATCATCCGATAAATCAGTGAGTGATCTGATAATGCATTATTTAATTTA--------
CYP337B3v2_KJ636466  (1740) TTGCATCATCCGATAAATGAGTGAGTGATCTGATAATGCATTATTTAATTTTTTAATTTG
CYP337B3v3_KM675665  (1609) TTGCATCATCCGATAAATCAGTGAGTGATCTGATAATGCATTATTTAATTTA--------
CYP337B3v4_KM675666  (1609) TTGCATCATCCGATAAATCAGTGAGTGATCTGATAATGCATTATTTAATTTA--------
CYP337B3v5_KX958388  (1607) TTGCATCATCCGATAAATGAGTGAGTGATCTGATAATGCATTATTTAATTTTTTAATTTA
CYP337B3v6_KX958389  (1740) TTGCATCATCCGATAAATGAGTGAGTGATCTGATAATGCATTATTTAATTTA--------
CYP337B3v7_KX958390  (1594) TTGCATCATCCGATAAATGAGTGAGTGATCTGATAATGCATTATTTAATTTA--------
CYP337B3v8_KX958391  (1609) TTGCATCATCCGATAAATCAGTGAGTGATCTGATAATGCATTATTTAATTTA--------
  CYP337B3_Olathe-2  (1740) TTGCATCATCCGATAAATGAGTGAGTGATCTGATAATGCATTATTTAATTTTTTAATTTG
  CYP337B3_Olathe-6  (1739) TTGCATCATCCGATAAATGAGTGAGTGATCTGATAATGCATTATTTAATTTA--------
                            1801                                                    1860
CYP337B3v1_JQ995292  (1670) AATGATAATGACGGCCTAATCCGGTTATCATTAATTATTT-AATCATTAGTTAGCAAATA
CYP337B3v2_KJ636466  (1800) AATGATAATGACGGCCTAATTCGGTTATCATAAATCATTA-AATCATTAGTTAGCAAATA
CYP337B3v3_KM675665  (1661) AATGATAATGACGGCCTAATTCGGTTATCATTAGTTATTT-AATCGTTAGTTAGCAAATA
CYP337B3v4_KM675666  (1661) AATGATAATGACGGCCTAATTCGGTTATCATTAGTTATTT-AATCGTTAGTTAGCAAATA
CYP337B3v5_KX958388  (1667) AATGATAATGACGGCCTAATTCGGTTATCATTAATCATTTTAATCATTAGTTAGCAAATA
CYP337B3v6_KX958389  (1792) AATGATAGTGACGGCCTAATTCGGTTATCATTAATCATTT-AATCATTAGTTAGCAAATA
CYP337B3v7_KX958390  (1646) AATGATTATGACGGCCTAATTCGGTTATCATGAATCATTTTAATCATTAGTTAGCAAATA
CYP337B3v8_KX958391  (1661) AATGATAATGACGGCCTAATTCGGTTATCATTAGTTATTT-AATCGTTAGTTAGCAAATA
  CYP337B3_Olathe-2  (1800) AATGATAATGACGGCCTAATTCGGTTATCATAAATCATTA-AATCATTAGTTAGCAAATA
  CYP337B3_Olathe-6  (1791) AATGATAGTGACGGCCTAATTCGGTTATCATTAATCATTT-AATCATTAGTTAGCAAATA
                            1861                                                    1920
CYP337B3v1_JQ995292  (1729) TTTTTCTTTAATCTTGGCTTATCTCGACAAACTGTATACCTAGTACTAATTATTCGTCTA
CYP337B3v2_KJ636466  (1859) TTTTTCTTTAATCTTTGCTAATCTTGACAAACTTTATACCTAGTACTAATTATTAGTTAT
CYP337B3v3_KM675665  (1720) TTTTTCTTTAATCTTGGCTTATCTTGACAAACTTTATACCTAGTACTAATTGTTTGTCTG
CYP337B3v4_KM675666  (1720) TTTTTCTTTAATCTTGGCTTATCTTGACAAACTTTATACCTAGTACTAATTGTTTGTCTG
CYP337B3v5_KX958388  (1727) TTTTTCTTTAATCTTGGCTTATCTTGACAATCTTTATACCAAGTAA-AATTGTTTGTTTG
CYP337B3v6_KX958389  (1851) TTTTTCTTTAATCTTGGCTTATCTTGACAAA----ATACCTAGTACTAATTGTTTGTTTG
CYP337B3v7_KX958390  (1706) TTTTTCTTTAATCTTGGCTTATCTTGACAAACTTTATACCTAGTACTAATTGTCTGTGTT
CYP337B3v8_KX958391  (1720) TTTTTCTTTAATCTTGGCTTATCTTGACAAACTTTATACCTAGTACTAATTGTTTGTCTG
  CYP337B3_Olathe-2  (1859) TTTTTCTTTAATCTTTGCTAATCTTGACAAACTTTATACCTAGTACTAATTATTAGTTAT
  CYP337B3_Olathe-6  (1850) TTTTTCTTTAATCTTGGCTTATCTTGACAAA----ATACCTAGTACTAATTGTTTGTTTG
                            1921                                                    1980
CYP337B3v1_JQ995292  (1789) TTTATTTTTTCCTATTATTATGTATCCCT-------ATCTCAGGTGCGTCGT--TTTAAT
CYP337B3v2_KJ636466  (1919) TTTGACTATTCCTACTTATCCCTATTTATT------ATCTCAAGTGCGTATTTGTTTAAT
CYP337B3v3_KM675665  (1780) TTTATTTTTACCTATTATTATGTATCCCT-------ATCTCAGGTGCGTTGT--TTTAAA
CYP337B3v4_KM675666  (1780) TTTATTTTTACCTATTATTATGTATCCCT-------ATCTCAGGTGCGTTGT--TTTAAA
CYP337B3v5_KX958388  (1786) TTTATTTTTACCTATAACTATTTATCCCTATTTATTATCTCAAGTGCGTATTTGTTTAAT
CYP337B3v6_KX958389  (1907) TTTATTTTAACCTATAACTATTTATCCCTATTTATTATCTCAAGTGCGTATTTGTTTAAT
CYP337B3v7_KX958390  (1766) TTTACCTTTTACTATTTATCCCTATTTGTT------ATCTCAAGTG--------TATAAT
CYP337B3v8_KX958391  (1780) TTTATTTTTACCTATTATTATGTATCCCT-------ATCTCAGGTGCGTTGT--TTTAAA
  CYP337B3_Olathe-2  (1919) TTTGACTATTCCTACTTATCCCTATTTATT------ATCTCAAGTGCGTATTTGTTTAAT
  CYP337B3_Olathe-6  (1906) TTTATTTTAACCTATAACTATTTATCCCTATTTATTATCTCAAGTGCGTATTTGTTTAAT
                            1981                                                    2040
CYP337B3v1_JQ995292  (1840) TATAGTACCTACGACAATAGTTTACAACAAAGGTATAAGTT--ACTATGGAAATAGTCTG
CYP337B3v2_KJ636466  (1973) AGTAGTATTTACGACAATAGTTTACCACAAAGTTATATAAG-TACTATGTAAATAGTCTG
CYP337B3v3_KM675665  (1831) AATAGTATTTACGACAATAGTTTACCACAAAGTTATATAATGCACTATGTAAATAGTCTG
CYP337B3v4_KM675666  (1831) AATAGTATTTACGACAATAGTTTACCACAAAGTTATATAATGCACTATGTAAATAGTCTG
CYP337B3v5_KX958388  (1846) AGTAGTATTTACGACAATAGTTTACCACAAAGTTATATAAG-TACTATGTAAATAGTCTG
CYP337B3v6_KX958389  (1967) AGTAGTATTTACGACAATAGTTTACCACAAAGTTATATAAA-TACTATGTAAATAGTCTG
CYP337B3v7_KX958390  (1812) TATAGTACTTACGACAATAGTTTACCACAAAGTTATATAATGTAGTATGTAAATAG----
CYP337B3v8_KX958391  (1831) AATAGTATTTACGACAATAGTTTACCACAAAGTTATATAATGCACTATGTAAATAGTCTG
  CYP337B3_Olathe-2  (1973) AGTAGTATTTACGACAATAGTTTACCACAAAGTTATATAAG-TACTATGTAAATAGTCTG
  CYP337B3_Olathe-6  (1966) AGTAGTATTTACGACAATAGTTTACCACAAAGTTATATAAA-TACTATGTAAATAGTCTG
                            2041                                                    2100
CYP337B3v1_JQ995292  (1898) AAGTTGATAAAACAACGACTAGTCTCTACC--------------TGCAGTAGTTTGTACA
CYP337B3v2_KJ636466  (2032) CAGTTGATAAAACAACTACTAGTCTCTACCTGAG----------TGCAGTGGTTTG---A
CYP337B3v3_KM675665  (1891) AAGTTGATAAAACAACGACTAGTCTACATGAG------------TGCAGTGGTTTGTACA
CYP337B3v4_KM675666  (1891) AAGTTGATAAAACAACGACTAGTCTACATGAG------------TGCAGTGGTTTGTACA
CYP337B3v5_KX958388  (1905) CAGTTGATAAAACAACTACTAGTCTCTACCTGAG----------TGTAGTGGGTTGTACA
CYP337B3v6_KX958389  (2026) AAGTTGACAAAACAGCGACTAGTTTACCTGAG------------TGCAGTGGTTTGTACA
CYP337B3v7_KX958390  (1868) AAGTTGATAAAACAACGACTAGTCTCTACCTGAGTGCAGTGGCACGCAGTGGTTTGTACA
CYP337B3v8_KX958391  (1891) AAGTTGATAAAACAACGACTAGTCTACATGAG------------TGCAGTGGTTTGTACA
  CYP337B3_Olathe-2  (2032) CAGTTGATAAAACAACTACTAGTCTCTACCTGAG----------TGCAGTGGTTTG---A
  CYP337B3_Olathe-6  (2025) AAGTTGACAAAACAGCGACTAGTTTACCTGAG------------TGCAGTGGTTTGTACA
```

```
                                2101                                                2160
CYP337B3v1_JQ995292   (1944)   CAATAT----TAATATTCTGG-TTTCATCCGACTTATTGAATTACGTCTCTATTACATAC
CYP337B3v2_KJ636466   (2079)   CAATACCGATTAATATTCTGG-TTTCATCTGACTTATTGAATTACGTCCCTATTACATAC
CYP337B3v3_KM675665   (1939)   CAATATCTATTAATATTCTGG-TTTCATCTGACTTATTGAATTACGTCGCTATAACATAC
CYP337B3v4_KM675666   (1939)   CAATATCTATTAATATTCTGG-TTTCATCTGACTTATTGAATTACGTCGCTATAACATAC
CYP337B3v5_KX958388   (1955)   CAATAT----TATTATTCTGGGTTTCATCTGACTTATTGAATTACGTCGCTATAATAAAC
CYP337B3v6_KX958389   (2074)   CAATACCTATTAATATTCTGG-TTTCATCTGACTTATTGAATTACGTCCCTATTACATAC
CYP337B3v7_KX958390   (1928)   CAATAT----TAATATTCTGG-TTTCATCTGACTTATTGAATTACGTCCCTAATACATAC
CYP337B3v8_KX958391   (1939)   CAATATCTATTAATATTCTGG-TTTCATCTGACTTATTGAATTACGTCGCTATAACATAC
  CYP337B3_Olathe-2   (2079)   CAATACCGATTAATATTCTGG-TTTCATCTGACTTATTGAATTACGTCCCTATTACATAC
  CYP337B3_Olathe-6   (2073)   CAATACCTATTAATATTCTGG-TTTCATCTGACTTATTGAATTACGTCCCTATTACATAC
                                2161                                                2220
CYP337B3v1_JQ995292   (1999)   AATGTCTTT------ATCTAACACTGTAGGGTTATTTTATAACTAGGTGCCACCTGCGGT
CYP337B3v2_KJ636466   (2138)   AAGGTCTCT------ATCTAACACTGTAGGTTTATTTTATAACTAGCTTGCGCCAGCGGT
CYP337B3v3_KM675665   (1998)   AAGGTTTTT------ATCTAATACTGCACGGTTATATTATAACTAGCTTCCGCCAGTGGT
CYP337B3v4_KM675666   (1998)   AAGGTTTTT------ATCTAATACTGTACGGTTATATTATAACTAGCTTCCGCCAGTGGT
CYP337B3v5_KX958388   (2011)   AAGGTCTAGCACTAGATCTAGCACTGTACCGTTATATTATAACTAGCTGCTGCCAGCAGT
CYP337B3v6_KX958389   (2133)   AAGGTCTTT------ATCTAACACTGTAGTGTTATTTTATAACTAGCTTCCGCCAGCGGT
CYP337B3v7_KX958390   (1983)   AAGGTCTTT------ATCTAACACTGTAGGTTTATTTTATAACTAGGTGCTTCCAGCGGT
CYP337B3v8_KX958391   (1998)   AAGGTTTTT------ATCTAATACTGTACGGTTATATTATAACTAGCTTCCGCCAGTGGT
  CYP337B3_Olathe-2   (2138)   AAGGTCTCT------ATCTAACACTGTAGGTTTATTTTATAACTAGCTTGCGCCAGCGGT
  CYP337B3_Olathe-6   (2132)   AAGGTCTTT------ATCTAACACTGTAGTGTTATTTTATAACTAGCTTCCGCCAGCGGT
                                2221                                                2280
CYP337B3v1_JQ995292   (2053)   TTAATTCTCAACTCATATTGCGCTCACATAAAAA--TTAGCATCGATAATAATGTGGCTA
CYP337B3v2_KJ636466   (2192)   TTAATTCTCAACCTA---------CACATAAAA---GTAGCATCAATAATAATACAGCTA
CYP337B3v3_KM675665   (2052)   TTAACTCTCAACCCA---------CACATAAAAA--GTAGCATCGATTATAATGTTGCTG
CYP337B3v4_KM675666   (2052)   TTAACTCTTAACCCA---------CACATAAAAA--GTAGCATCGATTATAATGTTGCTG
CYP337B3v5_KX958388   (2071)   TTAACTCTAAACCCATATCACGCACACATATAAATAGTTGCATCGATAATAATGTGGCTA
CYP337B3v6_KX958389   (2187)   TTAACTCTCAACCTA---------CACATAAAA---GTAGCATCAATAATAATGTGGCTA
CYP337B3v7_KX958390   (2037)   TTAACTCTCAACCTA---------CACATAAAA---GTAGCATCGATAATGAGCTGCCTA
CYP337B3v8_KX958391   (2052)   TTAACTCTCAACCCA---------CACATAAAAA--GTAGCATCGATTATAATGTTGCTG
  CYP337B3_Olathe-2   (2192)   TTAATTCTCAACCTA---------CACATAAAA---GTAGCATCAATAATAATACAGCTA
  CYP337B3_Olathe-6   (2186)   TTAACTCTCAACCTA---------CACATAAAA---GTAGCATCAATAATAATGTGGCTA
                                2281                                                2340
CYP337B3v1_JQ995292   (2111)   CTTAACACTACAAGAATTTCTCAAATTACCCCAGCTATCCCAGGTT--------------
CYP337B3v2_KJ636466   (2240)   CTTAACACTATAAGAATTTCTCAAATCACCCCAGTTATCCCAGGTT--------------
CYP337B3v3_KM675665   (2101)   CTTAACACTTTAAGAATTTCTCAAATTACCCCAGCTATCCCAGGTT--------------
CYP337B3v4_KM675666   (2101)   CTTAACACTTTAAGAATTTCTCAAATTACCCCAGCTATCCCAGGTT--------------
CYP337B3v5_KX958388   (2131)   TTTAACACTGAAAAAAATTCTCGAATCACCCCAGTTATTCCAGGTTGAAGCAAACAAACT
CYP337B3v6_KX958389   (2235)   TTTAACACTGAAAAAAAATCTCAAATTACCCCAGCTATCCCAGGTT--------------
CYP337B3v7_KX958390   (2085)   CTTACCACTATAAGAATTTCTCAAATTACCTCAGCTATCCCAGGTT--------------
CYP337B3v8_KX958391   (2101)   CTTAACACTTTAAGAATTTCTCAAATTACCCCAGCTATCCCAGGTT--------------
  CYP337B3_Olathe-2   (2240)   CTTAACACTATAAGAATTTCTCAAATCACCCCAGTTATCCCAGGTT--------------
  CYP337B3_Olathe-6   (2234)   TTTAACACTGAAAAAAAATCTCAAATTACCCCAGCTATCCCAGGTT--------------
                                2341                                                2400
CYP337B3v1_JQ995292   (2157)   ---CAGATATAATGGTTCAGGCATAGA---------CGATAATGATAACTGAGATACTTT
CYP337B3v2_KJ636466   (2286)   ------------------------------------AAAACTGAGATA-TTT
CYP337B3v3_KM675665   (2147)   ---CAGATATAATGGTTCAGGTATAGA---------TGATGATGATAACTGAGATACTTT
CYP337B3v4_KM675666   (2147)   ---CAGATATAATGGTTCAGGTATAGA---------TGATGATGATAACTGAGATACTTT
CYP337B3v5_KX958388   (2191)   TTTCAGCTTTAAAATATTAGTCATCTACTAATATTTTAATAATGATATTTGAGATA-TTT
CYP337B3v6_KX958389   (2281)   ---CAGATATAATGGTTCAGGTATAGA---------TGATGATGATACCTTAGGTA-TTT
CYP337B3v7_KX958390   (2131)   ---CAGATATAATGGTTCAGGCATAGA---------TGATGATGATAACTCAGATA-TTT
CYP337B3v8_KX958391   (2147)   ---CAGATATAATGGTTCAGGTATAGA---------TGATGATGATAACTGAGATACTTT
  CYP337B3_Olathe-2   (2286)   ---AA------------------------------------AACTGAGATA-TTT
  CYP337B3_Olathe-6   (2280)   ---CAGATATAATGGTTCAGGTATAGA---------TGATGATGATACCTTAGGTA-TTT
                                2401                                                2460
CYP337B3v1_JQ995292   (2205)   TTT--ATGTTCTAAAGTACTTTTCCATCTTGTTCCAGGTGTACGCTTCGCTCGCCTCCAA
CYP337B3v2_KJ636466   (2301)   TTT--ATGTTCTAAAGTACTTTTCCGTCTTGTTCCAGGTGTACGCTTCGCTCGCCTCCAA
CYP337B3v3_KM675665   (2195)   TTTTTATGTTTTAAAGTACTTTTCAATCTTGTTCCAGGTGTACGCTTCGCTCGCCTCCAA
CYP337B3v4_KM675666   (2195)   TTTTTATGTTTTAAAGTACTTTTCAATCTTGTTCCAGGTGTACGCTTCGCTCGCCTCCAA
CYP337B3v5_KX958388   (2250)   TTT--ATGTTCTAAAGTACTTTTACATCTTGTTCCAGGTGTACGCTTCGCTCGCCTCCAA
CYP337B3v6_KX958389   (2328)   TTT--ATGTTCTCAAGTACGATTCCATCTTGTTCCAGGTGTACGCTTCGCTCGCCTCCAA
CYP337B3v7_KX958390   (2178)   TTT--ATATTCTAAAGTACTTTTCCATCTTGTTCCAGGTGTACGCTTCGCTCGCCTCCAA
CYP337B3v8_KX958391   (2195)   TTTTTATGTTTTAAAGTACTTTTCAATCTTGTTCCAGGTGTACGCTTCGCTCGCCTCCAA
  CYP337B3_Olathe-2   (2301)   TTT--ATGTTCTAAAGTACTTTTCCGTCTTGTTCCAGGTGTACGCTTCGCTCGCCTCCAA
  CYP337B3_Olathe-6   (2327)   TTT--ATGTTCTCAAGTACGATTCCATCTTGTTCCAGGTGTACGCTTCGCTCGCCTCCAA
```

```
                                2461                                                        2520
CYP337B3v1_JQ995292   (2263)  GTGAAAGCGGGTCTCGCCTGGCTGTTACGTCGTTTTACCTTAGTCGAACAGGACAATTGC
CYP337B3v2_KJ636466   (2359)  GTGAAAGCGGGTCTCGCCTGGCTGTTACGTCGTTTTACCTTAGTCGAACAGGACAATTGC
CYP337B3v3_KM675665   (2255)  GTGAAAGCGGGTCTCGCCTGGTTGTTACGTCGTTTTACTCTAGTCGAACAGGACAATTGC
CYP337B3v4_KM675666   (2255)  GTGAAAGCGGGTCTCGCCTGGTTGTTACGTCGTTTTACTCTAGTCGAACAGGACAATTGC
CYP337B3v5_KX958388   (2308)  GTGAAAGCGGGTCTCGCCTGGCTGTTGCGTCGTTTTACTCTAGTCGAACAGGACAATTGC
CYP337B3v6_KX958389   (2386)  GTGAAAGCGGGTCTCGCCTGGCTGTTACGTCGGTTTACCTTAGTTGAACAGGACAATTGC
CYP337B3v7_KX958390   (2236)  GTGAAAGCGGGTCTCGCCTGGCTGTTACGTCGTTTTACCTTAGTCGAACAGGACAATTGC
CYP337B3v8_KX958391   (2255)  GTGAAAGCGGGTCTCGCCTGGTTGTTACGTCGTTTTACTCTAGTCGAACAGGACAATTGC
  CYP337B3_Olathe-2   (2359)  GTGAAAGCGGGTCTCGCCTGGCTGTTACGTCGTTTTACCTTAGTCGAACAGGACAATTGC
  CYP337B3_Olathe-6   (2385)  GTGAAAGCGGGTCTCGCCTGGCTGTTACGTCGGTTTACCTTAGTTGAACAGGACAATTGC
                                2521                                                        2580
CYP337B3v1_JQ995292   (2323)  ATACCAGAATTCGAGAAAAGTCCATTTGGCCTCCGAAGTCCCGATGCTTGTTATGAATTA
CYP337B3v2_KJ636466   (2419)  ATACCAGAATTCGAGAAAAGTCCATTTGGCCTCCGAAGTCCCGATGCTCGTTATGAATTA
CYP337B3v3_KM675665   (2315)  ATACCAGAATTCGAGAAAAGTCCATTTGGCCTCCGAAGTCCCGATGCTCGTTATGAATTA
CYP337B3v4_KM675666   (2315)  ATACCAGAATTCGAGAAAAGTCCATTTGGCCTCCGAAGTCCCGATGCTCGTTATGAATTA
CYP337B3v5_KX958388   (2368)  GTACCAGAATTCGAGAAAAGTCCATTCGGTCTACGAAGTCCCGATGCTCGTTATGAATTA
CYP337B3v6_KX958389   (2446)  ATACCAGAAATCGAGAAAAGTCCATTTGGTCTACGAAGCCCGGATGCTCGTTATGAATTA
CYP337B3v7_KX958390   (2296)  ATACCAGAATTTGAGAAAAGTCCATTCGGTCTACGAAGTCCCGATGCTCGTTATGAATTA
CYP337B3v8_KX958391   (2315)  ATACCAGAATTCGAGAAAAGTCCATTCGGTCTACGAAGTCCCGATGCTCGTTATGAATTA
  CYP337B3_Olathe-2   (2419)  ATACCAGAATTCGAGAAAAGTCCATTTGGCCTCCGAAGTCCCGATGCTCGTTATGAATTA
  CYP337B3_Olathe-6   (2445)  ATACCAGAATTCGAGAAAAGTCCATTTGGTCTACGAAGCCCCGATGCTCGTTATGAATTA
                                2581          2598
CYP337B3v1_JQ995292   (2383)  AAGTTAAGAGACATATAA
CYP337B3v2_KJ636466   (2479)  AAGTTAAGAGACATATAA
CYP337B3v3_KM675665   (2375)  AAGTTAAGAGACATATAA
CYP337B3v4_KM675666   (2375)  AAGTTAAGAGACATATAA
CYP337B3v5_KX958388   (2428)  AAGTTAAGAGACATATAA
CYP337B3v6_KX958389   (2506)  AAGTTAAGAGACATATAA
CYP337B3v7_KX958390   (2356)  AAGTTAAGAGACATATAA
CYP337B3v8_KX958391   (2375)  AAGTTAAGAGACATATAA
  CYP337B3_Olathe-2   (2479)  AAGTTAAGAGACATATAA
  CYP337B3_Olathe-6   (2505)  AAGTTAAGAGACATATAA
```

Figure S4. Alignment of reference genomic DNA sequences of cytochrome P450 337B (CYP337B3 gene alleles v1 through v8 and CYP337B3 alleles identified from Olathe, CO population of *Helicoverpa zea*. Identical and conserved nucleotide positions are shown in black text and nucleotide polymorphisms, insertions, and deletions are shown with grey background. Alignment gaps are indicated with a hyphen (-).

```
                              1                                                          60
CYP337B3v2_KJ636466      (1)  ATGTTGTTCGTAATATTACTCACGATATTAATAGTACTGTGCTCAATAGTGCTCCATTTC
  CYP337B3_Olathe-2      (1)  ATGTTGTTCGTAATATTACTCACGATATTAATAGTACTGTGCTCAATAGTGCTCCATTTC
                              61                                                        120
CYP337B3v2_KJ636466     (61)  AAGTTCACAAACAGCAAATACTGGAAAAAGAAGAACATTATCCAGATAAAAGATTTGACA
  CYP337B3_Olathe-2     (61)  AAGTTCACAAACAGCAAATACTGGAAAAAGAAGAACATTATCCAGATAAAAGATTTGACA
                              121                                                       180
CYP337B3v2_KJ636466    (121)  TTCACCTTTCTGTTCAACAAGCAATCGATGCCAGAACTAATCAAATCGATTTACGATAAA
  CYP337B3_Olathe-2    (121)  TTCACCTTTCTGTTCAACAAGCAATCGATGCCAGAACTAATCAAATCGATTTACGATAAA
                              181                                                       240
CYP337B3v2_KJ636466    (181)  CATGATGAACCGTATATTGGAACGACGTCGGCGACAATACCAACGCTCATTATAAAGAAC
  CYP337B3_Olathe-2    (181)  CATGATGAACCGTATATTGGAACGACGTCGGCGACAATACCAACGCTCATTATAAAGAAC
                              241                                                       300
CYP337B3v2_KJ636466    (241)  CTCGATGATATTCAAGCAGTGTTAGCTGGTGACTTCCAAAGTTTCTACAGTCGAGGAATA
  CYP337B3_Olathe-2    (241)  CTCGATGATATTCAAGCAGTGTTAGCTGGTGACTTCCAAAGTTTCTACAGTCGAGGAATA
                              301                                                       360
CYP337B3v2_KJ636466    (301)  ATAACCAGTCCAAACGATGTGTTAGCTGATAATTTGTTATTAATGGACGACTTCAAAAAA
  CYP337B3_Olathe-2    (301)  ATAACCAGTCCAAACGACGTGTTAGCTGATAATTTGTTATTAATGGACGACTTCAAAAAA
                              361                                                       420
CYP337B3v2_KJ636466    (361)  TGGAAACTCATACGACAAAAACTCACTCCAATTTTCACTAGTGCGAAACTCAAAAACATG
  CYP337B3_Olathe-2    (361)  TGGAAACTCATACGACAAAAACTCACTCCAATTTTCACTAGTGCGAAACTCAAAAACATG
                              421                                                       480
CYP337B3v2_KJ636466    (421)  TTTTACATCATAGAAAAAAGTGCCCGAGATTTTGTTGAGTTGGTTGAAGATAATGTTCAT
  CYP337B3_Olathe-2    (421)  TTTTACATCATAGAAAAAAGTGCCCGAGATTTTGTTGAGTTGGTTGAAGATAATGTTCAT
                              481                                                       540
CYP337B3v2_KJ636466    (481)  CTGCGAAAGAAACCGTTCAAACTTATGACCAGATACACTACAGCGTCTATTAGTGCTGCA
  CYP337B3_Olathe-2    (481)  CTGCGAAAGAAACCGTTCAAACTTATGACCAGATACACTACAGCGTCTATTAGTGCTGCA
                              541                                                       600
CYP337B3v2_KJ636466    (541)  GTATTTGGTATAGATACACAAGTAAAGAGTACCATGGAATCACCATTCGTTGAATTGGCA
  CYP337B3_Olathe-2    (541)  GTATTTGGTATAGATACACAAGTAAAGAGTACCATGGAATCACCATTCGTTGAATTGGCA
                              601                                                       660
CYP337B3v2_KJ636466    (601)  TTTAGAGCTTTACGACCATCGTTTATTCAAAATGTAATAGTTGTTATTGCAAATACTTTC
  CYP337B3_Olathe-2    (601)  TTTAGAGCTTTACGACCATCGTTTATTCAAAATGTAATAGTTGTTATTGCAAATACTTTC
                              661                                                       720
CYP337B3v2_KJ636466    (661)  CCTAGATTGTACAAACTCTTGCAGTTGAAACTTTTTGGTGAACATGAAGAATTTTTTGTG
  CYP337B3_Olathe-2    (661)  CCTAGATTGTACAAACTCTTGCAGTTGAAACTTTTTGGTGAACATGAAGAATTTTTTGTG
                              721                                                       780
CYP337B3v2_KJ636466    (721)  GGTGCAGTGAAAACTGTTTTAGAAAGTAGGAGGCATGATACTACTAAAAGATATGATTTT
  CYP337B3_Olathe-2    (721)  GGTGCAGTGAAAACTGTTTTAGAAAGTAGGAGGCATGATACTACTAAAAGATATGATTTT
                              781                                                       840
CYP337B3v2_KJ636466    (781)  ATTGAGATTTGCTTGGAACTACAGAAGAATGGAATAATGCAGGACTTTTCAACTGGATAT
  CYP337B3_Olathe-2    (781)  ATTGAGATTTGCTTGGAACTACAGAAGAATGGAATAATGCAGGACTTTTCAACTGGATAT
                              841                                                       900
CYP337B3v2_KJ636466    (841)  AAATTGGAGCCGACCGACGAACTGATGGCTGCTCAAGCATTCTTCTTTTTTGTGGCTGGT
  CYP337B3_Olathe-2    (841)  AAATTGGAGCCGACCGACGAACTGATGGCTGCTCAAGCATTCTTCTTTTTTGTGGCTGGT
                              901                                                       960
CYP337B3v2_KJ636466    (901)  GCAGACACCTCTGCTAACACAATGCATTATTCTTTGTTAGAGCTGTCAAACAATCCAAAA
  CYP337B3_Olathe-2    (901)  GCAGACACCTCTGCTAACACAATGCATTATTCTTTGTTAGAGCTGTCAAACAATCCAAAA
                              961                                                      1020
CYP337B3v2_KJ636466    (961)  ATCTTGGCAAAACTACATGAGGAAATTGACAAAGTTTTCGAAGGCGGAGCTGGGGAACTA
  CYP337B3_Olathe-2    (961)  ATCTTGGCAAAACTACATGAGGAAATTGACAAAGTTTTCGAAGGCGGAGCTGGGGAACTA
                              1021                                                     1080
CYP337B3v2_KJ636466   (1021)  ACTTATAATGACATTGATAAGTTACAATATTTAGATCAGGTTATAAATGAAGCAATGAGA
  CYP337B3_Olathe-2   (1021)  ACTTATAATGACATTGATAAGTTACAATATTTAGATCAGGTTATAAATGAAGCAATGAGA
                              1081                                                     1140
CYP337B3v2_KJ636466   (1081)  AAGTATCCTCCAGTAGGTGTCATGCAAAGATTGTGTACTAAAGATACAGTTTTACCTTCT
  CYP337B3_Olathe-2   (1081)  AAGTATCCTCCAGTAGGTGTCATGCAAAGATTGTGTACTAAAGATACAGTTTTACCTTCT
                              1141                                                     1200
CYP337B3v2_KJ636466   (1141)  GGTATACCCATAGCAAAGGGTAACACAATAATGATACCAGTGTTCGGTCTTCACAGAGAC
  CYP337B3_Olathe-2   (1141)  GGTATACCCATAGCAAAGGGTAACACAATAATGATACCAGTGTTCGGTCTTCACAGAGAC
                              1201                                                     1260
CYP337B3v2_KJ636466   (1201)  GAAAAATACTTTGATGACCCACACGTATTTGATCCGGATAGATTTTCACCAGAAAACGTA
  CYP337B3_Olathe-2   (1201)  GAAAAATACTTTGATGACCCACACGTATTTGATCCGGATAGATTTTCACCAGAAAACGTA
```

```
                            1261                                                    1320
CYP337B3v2_KJ636466  (1261) TCCAAAATCAAGAATTATGCTTATTTACCTTTTGGTGAAGGAAACCGCATTTGTATTGGC
  CYP337B3_Olathe-2  (1261) TCCAAAATCAAGAATTATGCTTATTTACCTTTTGGTGAAGGAAACCGCATTTGTATTGGC
                            1321                                                    1380
CYP337B3v2_KJ636466  (1321) CTCCAAGTGAAAGCGGGTCTCGCCTGGCTGTTACGTCGTTTTACCTTAGTCGAACAGGAC
  CYP337B3_Olathe-2  (1321) CTCCAAGTGAAAGCGGGTCTCGCCTGGCTGTTACGTCGTTTTACCTTAGTCGAACAGGAC
                            1381                                                    1440
CYP337B3v2_KJ636466  (1381) AATTGCATACCAGAATTCGAGAAAAGTCCATTTGGCCTCCGAAGTCCCGATGCTCGTTAT
  CYP337B3_Olathe-2  (1381) AATTGCATACCAGAATTCGAGAAAAGTCCATTTGGCCTCCGAAGTCCCGATGCTCGTTAT
                            1441                1464
CYP337B3v2_KJ636466  (1441) GAATTAAAGTTAAGAGACATATAA
  CYP337B3_Olathe-2  (1441) GAATTAAAGTTAAGAGACATATAA
```

Figure S5. Alignment of the mRNA reference sequences of cytochrome P450 337B3 allele v2 (KJ636466.1) and CYP337B3 allele v2 identified from Olathe, CO population of *Helicoverpa zea*. Identical and conserved nucleotide positions are shown in black text and nucleotide polymorphisms, insertions, and deletions are shown with grey background. Alignment gaps are indicated with a hyphen (-).

```
                            1                                                         60
CYP337B3v6_KX958389     (1) ATGTTGTTCGTGATATTACTCACGATATTAATAGTACTGTGCTCAATAGTGCTCCATTTC
  CYP337B3_Olathe-6     (1) ATGTTGTTCGTAATATTACTCACGATATTAATAGTACTGTGTTCAATAGTGCTCCATTTT
                            61                                                       120
CYP337B3v6_KX958389    (61) AAGTTCACAAACAGCAAATACTGGAAAAAGAAGAACATTATCCAGATAAAAGATTTGACA
  CYP337B3_Olathe-6    (61) AAGTTCACAAACAGCAAATACTGGAAAAAGAAGAATATAATACAGATAAAAGATTTGACA
                            121                                                      180
CYP337B3v6_KX958389   (121) TTCACCTTTCTGTTCAACAAGCAATCGATGCCAGAACTAATCAAATCGATTTACGATAAA
  CYP337B3_Olathe-6   (121) TTCACCTTTCTGTTCAACAAGCAATCGATGCCAGAACTAATCAAATCGATTTACGATAAA
                            181                                                  *   240
CYP337B3v6_KX958389   (181) CATGATGAACCGTATATTGGAACGACGTCCGCGACAATACCAACGCTCATTATAAAGAAC
  CYP337B3_Olathe-6   (181) CATAATGAACCGTATATTGGAACGACGTCGGCGACAATACCAACGCTCATTTTAAAGAAC
                            241                                                      300
CYP337B3v6_KX958389   (241) CTCGATGATATTCAAGCAGTGTTAGCTGGTGACTTCCAAAGTTTCTACAGTCGAGGAATA
  CYP337B3_Olathe-6   (241) CTCGATGATATTCAAGCAGTGTTAGCTGGTGACTTCCAAAGTTTCTACAGTCGAGGAATA
                            301                                                      360
CYP337B3v6_KX958389   (301) ATAACCAGTCCAAACGATGTGTTAGCTGATAATTTGTTATTAATGGACGACTTCAAAAAA
  CYP337B3_Olathe-6   (301) ATAACCAGTCCAAACGATGTGTTAGCTGATAATTTGTTATTAATGGACGACTTCAAAAAA
                            361                                                      420
CYP337B3v6_KX958389   (361) TGGAAACTCATACGACAAAAACTCACTCCAATTTTCACTAGTGCGAAACTCAAAAACATG
  CYP337B3_Olathe-6   (361) TGGAAACTCATACGACAAAAACTCACTCCAATTTTCACTAGTGCGAAACTCAAAAACATG
                            421                                                      480
CYP337B3v6_KX958389   (421) TTTTACATCATAGAAAAAAGTGCTCGAGATTTTGTTGAGTTGGTTGAAGATAATGTTCAT
  CYP337B3_Olathe-6   (421) TTTTACATCATAGAAAAAAGTGCTCGAGATTTTGTTGAGTTGGTTGAAGATAATGTTCAT
                            481                                                      540
CYP337B3v6_KX958389   (481) CTGCGAAAGAAACCGTTCAAACTTATGACCAGATACACTACAGCGTCTATTAGTGCTGCA
  CYP337B3_Olathe-6   (481) CTGCGAAAGAAACCGTTCAAACTTATGACCAGATACACTACAGCGTCTATTAGTGCTGCA
                            541                                                      600
CYP337B3v6_KX958389   (541) GTATTTGGTATAGATACTCAAGTAAAGAGTACCATGGAATCACCATTCGTTGAATTGGCA
  CYP337B3_Olathe-6   (541) GTATTTGGTATAGATACTCAAGTAAAGAGTACCATGGAATCACCATTCGTTGAATTGGCA
                            601                                                      660
CYP337B3v6_KX958389   (601) TTTAGAGCTTTACGACCATCGTTTATTCAAAATGTAATAGTTGTTATTGCAAATACTTTC
  CYP337B3_Olathe-6   (601) TTTAGAGCTTTACGACCATCGTTTATTCAAAATGTAATAGTTGTTATTGCAAATACTTTC
                            661                                                      720
CYP337B3v6_KX958389   (661) CCTAGATTGTACAAACTCTTGCAGTTGAAACTTTTTGGTGAACATGAAGAATTTTTTGTG
  CYP337B3_Olathe-6   (661) CCTAGATTGTACAAACTCTTGCAGTTGAAACTTTTTGGTGAACATGAAGAATTTTTTGTG
                            721                                                      780
CYP337B3v6_KX958389   (721) GGGGCAGTGAAAACTGTTTTAGAAAGTAGGAGGCATGATACTACTAAAAGATATGATTTT
  CYP337B3_Olathe-6   (721) GGGGCAGTGAAAACTGTTTTAGAAAGTAGGAGGCATGATACTACTAAAAGATATGATTTT
                            781                                                      840
CYP337B3v6_KX958389   (781) ATTGAGATTTGCTTGGAACTACAGAAGAATGGAATAATGCAGGACTTTTCAACTGGATAT
  CYP337B3_Olathe-6   (781) ATTGAGATTTGCTTGGAACTACAGAAGAATGGAATAATGCAGGACTTTTCAACTGGATAT
```

```
                                841                                                        900
CYP337B3v6_KX958389   (841) AAATTGGAGCCGACCGACGAACTGATGGCTGCTCAAGCATTCTTCTTTTTTGTGGCTGGT
  CYP337B3_Olathe-6   (841) AAATTGGAGCCGACCGACGAACTGATGGCTGCTCAAGCATTCTTCTTTTTTGTGGCTGGT
                                901                                                        960
CYP337B3v6_KX958389   (901) GCAGACACCTCTGCTAACACAATGCATTATTCTTTGTTAGAGCTGTCAAACAATCCAAAA
  CYP337B3_Olathe-6   (901) GCAGACACCTCTGCTAACACAATGCATTATTCTTTGTTAGAGCTGTCAAACAATCCAAAA
                                961                                                       1020
CYP337B3v6_KX958389   (961) ATCTTGGCAAAACTACATGAGGAAATTGACAAAGTTTTCGCAGGTGGAGCTGGGGAACTA
  CYP337B3_Olathe-6   (961) ATCTTGGCAAAACTACATGAGGAAATTGACAAAGTTTTCGCAGGTGGAGCTGGGGAACTA
                                1021                                                      1080
CYP337B3v6_KX958389  (1021) ACTTATAATGACATTGATAAGTTACAATATTTAGATCAGGTTATAAATGAAGCAATGAGA
  CYP337B3_Olathe-6  (1021) ACTTATAATGACATTGATAAGTTACAATATTTAGATCAGGTTATAAATGAAGCAATGAGA
                                1081                                                      1140
CYP337B3v6_KX958389  (1081) AAGTATCCTCCAGTAGGTGTCATGCAAAGATTGTGTACTAAAGATACGGTTTTACCTTCT
  CYP337B3_Olathe-6  (1081) AAGTATCCTCCAGTAGGTGTCATGCAAAGATTGTGTACTAAAGATACAGTTTTACCTTCT
                                1141                                                      1200
CYP337B3v6_KX958389  (1141) GGTATACCCATAGCAAAGGGTAACACAATAATGATACCAGTGTTCGGTCTTCACAGAGCC
  CYP337B3_Olathe-6  (1141) GGTATACCCATAGCAAAGGGTAACACAATAATGATACCAGTGTTCGGTCTTCACAGAGAC
                                1201                                                      1260
CYP337B3v6_KX958389  (1201) GAAAAATACTTTGATGACCCCCATGTATTTGATCCGGATAGATTTTCACCAGAAACCGTA
  CYP337B3_Olathe-6  (1201) GAAAAATACTTTGATGACCCACATGTATTTGATCCGGATAGATTTTCACCAGAAAACGTA
                                1261                                                      1320
CYP337B3v6_KX958389  (1261) TCCAAAATCAAGAATTATGCTTATTTACCTTGTGGTGAAGGAAACCGCATTTGTATTGGC
  CYP337B3_Olathe-6  (1261) TCCAAAATCAAGAATTATGCTTATTTACCTTTTGGTGAAGGAAACCGCATTTGTATTGGC
                                1321                                                      1380
CYP337B3v6_KX958389  (1321) CTCCAAGTGAAAGCGGGTCTCGCCTGGCTGTTACGTCGGTTTACCTTAGTTGAACAGGAC
  CYP337B3_Olathe-6  (1321) CTCCAAGTGAAAGCGGGTCTCGCCTGGCTGTTACGTCGGTTTACCTTAGTTGAACAGGAC
                                1381                                                      1440
CYP337B3v6_KX958389  (1381) AATTGCATACCAGAAATCGAGAAAAGTCCATTTGGTCTACGAAGCCCGGATGCTCGTTAT
  CYP337B3_Olathe-6  (1381) AATTGCATACCAGAATTCGAGAAAAGTCCATTTGGTCTACGAAGCCCCGATGCTCGTTAT
                                1441                1464
CYP337B3v6_KX958389  (1441) GAATTAAAGTTAAGAGACATATAA
  CYP337B3_Olathe-6  (1441) GAATTAAAGTTAAGAGACATATAA
```

Figure S6. Alignment of the mRNA reference sequences of cytochrome P450 337B3 allele v6 (KX958389.1) and CYP337B3 allele v6 identified from Olathe, CO population of *Helicoverpa zea*. Identical and conserved nucleotide positions are shown in black text and nucleotide polymorphisms, insertions, and deletions are shown with grey background. Alignment gaps are indicated with a hyphen (-). A to T transversion at the nucleotide position 232 leading to the amino acid substitution I78L is marked with an asterisk (*).