Characterizing medaka visual features using a high-throughput optomotor response assay

Risa Suzuki[1,2], Jia Zheng Woo[1,#a], Thomas Thumberger[1], Gero Hofmann[1], Joachim Wittbrodt[1,*] and Tinatini Tavhelidse-Suck[1,*]

[1]Centre for Organismal Studies (COS), Heidelberg University, Heidelberg, Germany

[2]Heidelberg Biosciences International Graduate School (HBIGS), Heidelberg, Germany

[#a]Current Address: Department of Biochemistry, Stanford University, Stanford, California, USA

*corresponding authors

E-mail: jochen.wittbrodt@cos.uni-heidelberg.de (JW), tinatini.tavhelidse@cos.uni-heidelberg.de (TTS)

Abstract

Medaka fish (*Oryzias latipes*) is a powerful model to study genetics underlying the developmental and functional traits of the vertebrate visual system. We established a simple and high-throughput optomotor response (OMR) assay utilizing medaka larvae to study visual functions including visual acuity and contrast sensitivity. Our assay presents multiple adjustable stripes in motion to individual fish in a linear arena. For that the OMR assay employs a tablet display and the *Fish Stripes* software to adjust speed, width, color, and contrast of the stripes. Our results demonstrated that optomotor responses were robustly induced by black and white stripes presented from below in the linear-pool-arena. We detected robust strain specific differences in the OMR when comparing long established medaka inbred strains. We observed an interesting training effect upon the initial exposure of larvae to thick stripes, which allowed them to better respond to narrower stripes. The OMR setup and protocol presented here provide an efficient tool for quantitative phenotype mapping, addressing visual acuity, trainability of cortical neurons, color sensitivity, locomotor response, retinal regeneration and others. Our open-source setup presented here provides a crucial prerequisite for ultimately addressing the genetic basis of those processes.

Introduction

The teleost medaka (*Oryzias latipes*) is a vertebrate model widely used in basic as well as biomedical research. The advantages of medaka as a vertebrate genetic model system include short generation time, transparent embryos, numerous offspring, a

small genome size (about 700 Mb) and easy husbandry [1,2]. The full repertoire of genome editing tools is available to generate transgenic lines, gene knockout models or human disease models [3–5]. In addition, its high tolerance towards inbreeding enabled the establishment of the first near-isogenic vertebrate population panel [1,6–9] to explore the genetics underlying a given phenotype [10]. These features make medaka an ideal model for population genomic studies, drug screens and toxicology studies.

Retinal architecture and development are remarkably conserved among all vertebrates. The development, structure and function of the medaka retina has been studied extensively and in great molecular detail [11–13]. For evaluating visual function, behavioral assays have been established as indispensable tools [14,15]. The optokinetic response (OKR) assay is one of the classical assays where the reflexive eye movements of immobilized animals are analyzed while the eyes are being exposed to alternating black and white stripes placed on a rotating drum [16–21]. In contrast, the optomotor response (OMR) assay evaluates the behavioral locomotor response of animals stimulated by moving black and white stripe patterns. In those assays, visual functions such as spatial resolution or acuity and temporal resolution are evaluated by adjusting stripe width, the speed of stripe movement and the intensity of light exposure [16,22–26]. OKR and OMR assays have been used in studies to explore the genetic and molecular mechanisms underlying retinal development [23], retinal degenerative disease [27], neural activities [28,29], as well as animal behavior [30] in various models.

In order to explore the genetics underlying visual sensory related phenotypes a high-throughput method to determine optical features of the individual is indispensable.

OKR however has limited throughput due to the immobilization step. Moreover, despite the suitability of OMR for large scale and high-throughput studies given its simplicity, the majority of studies using OMR employ a drum setup with apparent limitations in the throughput.

In the drum-style OMR, a series of alternating black and white stripes rotates around a single animal, in response to which the animal follows the direction of the rotating stripes [23]. One successful instance of using OMR in a high-throughput study was done by Neuhauss et al. [31] where up to a hundred zebrafish larvae were simultaneously placed in a chamber above a flat monitor displaying alternating black and white stripes moving linearly towards one direction. This experimental design enabled screening and identifying zebrafish mutants with visual defects. Yet the setup does not allow the evaluation of the visual features at the level of the individual. The setup is furthermore not designed to eliminate additional stimuli such as the interaction between larvae.

To elucidate the features of individual medaka larvae we established a linear-pool-style OMR assay combining a tablet with full control of all features (stripe width, speed, color and contrast) with a linear-pool-arena with 15 separate lanes to characterize the basic features of fish eyes, such as visual acuity and contrast sensitivity in a highly parallel manner.

Results

OMR has been utilized for juvenile and adult medaka fish to evaluate their behavior as well as visual functions [23,30]. In these studies, drum-style OMR which restricts the

93 scalability of the assay, was employed where the fish were placed in a tank inside of a
94 drum showing a moving stripe pattern eliciting a strong behavioral response.
95 Here, we developed a linear-pool-style OMR setup and protocol for large scale
96 and high-throughput experiments on individual larvae. In the linear-pool-style OMR,
97 the OMR is evoked by stripe motion displayed below the linear pool on a screen. Our
98 open-source *Fish Stripes* software allows full control of stripe parameters (width,
99 speed, color and contrast) (Fig 1A, B, S1 Fig). Videos are acquired using a camera
100 (CellCam Centro 200MR) with an infrared (IR) filter and an IR lamp. Data are analysed
101 with the analysis macro (see Materials and methods). With this setup, 15 individual
102 larvae can be tested at a time which are placed individually in each lane of the linear
103 pool (Fig 1C, D, S2 Fig).
104
105 **Fig 1. The linear-pool-style optomotor response (OMR) setup.** (A) Illustration of the
106 linear-pool-style OMR setup: A PVC box containing a display (e.g. tablet) and the 140
107 mm x 110 mm linear-pool-arena on top. A camera (CellCam Centro 200MR) with an
108 infrared (IR) filter and an IR lamp are used to acquire the videos. The box is closed on
109 all sides to exclude external visual stimuli from the surrounding. (B) Stripe pattern
110 displayed on the tablet screen. Stripe parameters (width in pixels, stripe color 1 and
111 stripe color 2 in hex code, contrast ("opacity") (x 100%) and speed (x 50 pixel/s)) are
112 set and automated using the *Fish Stripes* software. (C-D) Images of the linear-pool-
113 arena placed on top of a tablet screen displaying black and white stripe pattern
114 acquired with a camera without (C) and with IR filter (D). The lanes of the linear-pool-
115 arena are oriented at 90° towards the moving stripe pattern. The larvae are marked
116 with red circles. (E) Experimental timeline. 0-1 days post hatch (dph) larvae were

acclimatized for 2 hours in the setup while being presented stationary stripes before start of the experiment composed of 5 s stationary stripes, followed by 10 s of stripes moving to the right, 5 s stationary stripes, 10 s of stripes moving to the left. Prior to testing additional stripe conditions, larvae were acclimatized for 10 minutes with respective stationary stripes.

The larvae were placed in the linear-pool-arena 2 hours prior to the onset of stripe motion with the display showing stationary stripes (acclimation period). In each experiment, stripe motion consists of 4 phases: in phase 1, the stripes are stationary for 5 seconds, in phase 2, the stripes start to move toward right for 10 seconds, in phase 3, the stripes pause for 5 seconds, and in phase 4, the stripes move toward left for 10 seconds. Prior to testing different stripe conditions, larvae were acclimatized for 10 minutes with respective stationary stripes (Fig 1E).

In order to allow enough space for responding, only those larvae with a minimal distance of 27 mm from the end of the lane were considered valid. Those larvae swimming in the direction of stripe motion for at least 20% (27 mm) of the lane length after the initiation of stripe movement were considered responsive. Those larvae that were valid for more than three times out of four exposures to the stripe movement were used for response rate calculation. The response rate was calculated for each larva as the ratio of response count to the count of larva classified valid (S3 Fig).

To assess whether the stimulation from below can induce OMR in freshly hatched Cab strain medaka larvae (0-1 days post hatch (dph), before the initiation of self-feeding [32]), we exposed 15 larvae to black and white 8 mm “thick” stripes of

141 three different speeds: 4.3, 6.5 and 8.6 mm/s (Fig 2A) and stripes of three distinct
142 widths: 4, 8 and 10 mm with a speed of 6.5 mm/s (Fig 2B).
143
144 **Fig 2. Medaka Cab strain shows a robust OMR induced by stimulation from**
145 **below.** (A-B) Response rates of larvae to moving stripes with three different stripe
146 speeds and a constant stripe width of 8 mm (A) or with three different stripe widths and
147 a constant stripe speed of 6.5 mm/s (B). Number above each boxplot represents the
148 number of larvae included for the response rate calculation. Cab strain medaka
149 responded robustly toward black and white stripes at stripe speeds between 4.3 and
150 8.6 mm/s and stripe widths between 4 and 10 mm. Statistical analysis performed in R,
151 pairwise t-test, Bonferroni corrected.
152
153 Cab strain medaka showed a robust OMR regardless of stripe width or speed
154 tested (the median response rate was 66.7% for stripe width of 8.0 mm and speed of
155 4.3 mm/s, and 100 % for all other conditions) (Fig 2). All larvae showed a high response
156 rate when the stripes were 8 mm wide with a speed of 6.5 mm/s. Therefore, stripe
157 speed was set to 6.5 mm/s for the following experiments to assess the threshold for
158 stripe width - and hence visual acuity - where fish no longer recognize a “thin” stripe
159 as a stripe and as a consequence no longer show OMR.
160 In addition to Cab strain medaka, the HdrR strain, a traditional inbred strain
161 originated from Southern Japan, is also commonly used as a wildtype [7]. To test the
162 hypothesis whether visual features are genetically encoded, we used the setup to
163 compare the response between Cab and HdrR strain medaka. 13-15 larvae of each
164 strain were exposed to stripes of 1.4, 1.2, 1.0 and 0.8 mm width respectively (Fig 3).

While Cab strain medaka showed a higher response rate towards stripes of 1.4, 1.2 and 1.0 mm width compared to the HdrR strain, the overall response rate in both strains decreased with decreasing stripe width (Cab: median response rate of 66.7% for 1.4 mm, 16.7% for 1.2 mm, 29.2% for 1.0 mm, 0.0% for 0.8 mm, and HdrR: 50.0% for 1.4 mm, 0.0% for 1.2 mm, 0.0% for 1.0 mm, 0.0% for 0.8 mm).

Fig 3. HdrR strain medaka show higher trainability in their OMR towards narrow stripes than Cab strain medaka. Response rates of Cab and HdrR strain larvae to moving stripes for each stripe width (1.4, 1.2, 1.0 and 0.8 mm) with (grey) and without (white) prior exposure to thick stripe (8 mm) motion. The response rate gradually decreased with decreasing stripe width both in Cab and HdrR strain medaka. After the training with thick stripes, an increase in response rate was observed both in Cab and HdrR, with a more prominent increase in HdrR. Number above each boxplot represents the number of larvae included for the response rate calculation. * $p \leq 0.05$, statistical analysis performed in R, pairwise t-test, Bonferroni corrected.

In order to test whether the OMR to different stripe widths is a trainable feature, we extensively exposed 13-15 larvae of each strain to “thick” stripes (8 mm width) for more than 10 times before they were subjected to stripe widths of 1.4, 1.2, 1.0 and 0.8 mm respectively.

In the Cab strain, the response rate toward the thinner stripes increased (median response rate of 66.7% for 1.2 mm and 29.2% for 1.0 mm) but didn’t increase for stripe widths of 1.4 mm (66.7%) and 0.8 mm (0.0%) (Fig 3).

188 Strikingly, after training, HdrR larvae were much more sensitive to thin stripes,
189 showing a significant increase in the response rate to 1.2, 1.0, and 0.8 mm wide stripes
190 (median response rate of 75.0% (1.4 mm), 66.7% (1.2 mm), 50.0% (1.0 mm), and
191 33.3% (0.8 mm)) (Fig 3). Interestingly, for stripe widths of 1.0 and 0.8 mm, the trained
192 HdrR strain responded significantly better than the trained Cab strain (Fig 3). These
193 results indicate first, that indeed OMR to different stripe widths is a trainable feature
194 and second, that there is a difference in trainability among different inbred medaka
195 strains.

196 To assess whether sensitivity to different colors can also be tested using our
197 setup, 15 larvae of each Cab and HdrR strain, as well as of three inbred strains from
198 the Medaka Inbred Kiyosu-Karlsruhe (MIKK) panel [8] were subjected to 8 mm wide
199 black/white, blue/white, green/white or red/white stripes moving at 6.5 mm/s (Fig 4).

200

201 **Fig 4. Various medaka strains show a robust OMR induced by colored stripes.**
202 Response rates of Cab, HdrR, 10-1, 11-2, and 69-1 strain larvae to moving stripes (8
203 mm wide, moving at 6.5 mm/s) of each color combination (black/white, blue/white,
204 green/white and red/white). Number above each boxplot represents the number of
205 larvae included for the response rate calculation. Statistical analysis performed in R,
206 pairwise t-test, Bonferroni corrected.

207

208 Similar to Cab and HdrR strain medaka larvae, larvae of all three inbred strains
209 tested robustly responded to the black and white stripes (10-1, 11-2 and 69-1: median
210 response rate of 100% to black/white stripes). Whereas Cab and HdrR strain medaka
211 larvae robustly responded also to all other color combinations tested, larvae of the

three inbred strains tested tended to respond less well to blue/white and red/white color combinations (Cab: median response rate of 100% for all the conditions, and HdrR: 87.5% for black/white and 100% for all the other conditions, 10-1: median response rate of 75.0% for blue/white and 87.5% for red/white, 11-2: 70.8% for blue/white and 75.0% for red/white, 69-1: 66.7% for blue/white and red/white). For green/white stripes, 11-2 responded less well (median response rate of 66.7%) compared to the other strains (10-1 and 69-1: 100%) tested. These results not only show that spectral sensitivity can be tested using our setup, but also that different strains show differential responses to distinct colors.

Discussion

In this study we developed an easy and high-throughput assay for investigating medaka's visual function using OMR. With our linear-pool-setup employing the open-source *Fish Stripes* software that generates moving stripe patterns and the analysis macro, we provide a full package to easily assess visual features such as visual acuity or color sensitivity for aquatic animals.

In our setup, OMR is robustly induced in 0-1 dph medaka larvae using black and white stripes presented from below, regardless of the stripe speed or width as long as it was thick enough (4 - 10 mm) and at adequate speed (4.3 - 8.6 mm/s). So far OMR in medaka has been elicited by presenting stripes rotating around the individual and has preferentially been shown only from 5 dph onwards [23,24,30]. In contrast to earlier reports [23], we show a robust OMR in different strains already at 0-1 dph.

234 This response in earlier stages may be due to the longer acclimation time
235 improving the response rate. With a short acclimation time of less than 30 minutes,
236 Cab strain medaka showed a decrease in response.

237 Testing visual properties of Cab and HdrR strain medaka by OMR using narrow
238 stripes showed that the response rate depends on the stripe width. Strikingly, we
239 uncover a strain-specific trainability of OMR with HdrR strain medaka larvae being
240 more sensitive to narrow stripes after training. This aligns well with previous findings
241 on strain-specific differences in visual acuity [24].

242 This trainability is possibly due to the enhancement in retinal computation or the
243 increase in the selectivity of cortical neurons for visual stimuli. The vertebrate retina
244 does not only function as signal transmitter to the brain but also adapts to light and
245 sharpens the image and has its own feedback loop between cells to compute the signal
246 and adjust depending on the stimulus [33]. Possibly, through the training period,
247 contrast gain control and adaptation are acquired by retinal ganglion cells, which
248 enhances the computational ability of the retina itself [34,35]. Trainability in cognitive
249 function is well studied in mammals as they learn to distinguish task-relevant visual
250 stimuli and the timing to pay attention to the environment, which in return causes a
251 significant change in their early sensory cortical neurons [36]. As the formation and
252 maintenance of attention to visual stimuli has also been reported in fish, the training
253 effect could be explained as due to the increase in the awareness and attention to the
254 environment [37].

255 Our setup also allows for assessing spectral sensitivity. Color perception is
256 mediated by distinct absorption spectra of different classes of cone-opsins. Medaka
257 possesses 8 cone opsins and 1 rod opsin, which collectively confer sensitivity across

258 the ultraviolet, blue, green, and red regions of the light spectrum [38]. While Cab and
259 HdrR medaka strains exhibit comparable response towards all the colored stripes
260 tested, the three inbred strains from the MIKK panel showed a slightly decreased
261 response. The observed strain specific variations in the response rates to colored
262 stripes may be attributed to potential differences in the expression of the opsin genes.
263 Here, we established a straightforward, easy-to-recreate and -use, high-
264 throughput OMR-based protocol to study behaviors that are dependent on visual input
265 across medaka and other aquatic species. The 15-lane linear-pool-arena allows
266 parallel assessment of visual parameters at the level of the individual. Thus, this setup
267 provides the basis to address the underlying genetics of various phenotypes not only
268 limited to visual acuity or color sensitivity but also of more complex traits such as retinal
269 regeneration, neuronal selectivity and trainability.
270

271 Materials and methods

272 Medaka stocks and maintenance

273 All medaka strains are maintained in closed stocks at Heidelberg University. Medaka
274 husbandry (permit number 35–9185.64/BH Wittbrodt) was performed according to
275 local animal welfare standards (Tierschutzgesetz §11, Abs. 1, Nr. 1) and in accordance
276 with European Union animal welfare guidelines [39]. The fish facility is under the
277 supervision of the local representative of the animal welfare agency.
278 Medaka (*O. latipes*) fish were bred and maintained as previously described [40].
279 The two isogenic medaka strains used in this study were Cab and HdrR-II1 (strainID:
280 IB178) was supplied by NBRP Medaka (https://shigen.nig.ac.jp/medaka/). All

experimental procedures were performed according to the guidelines of the German animal welfare law and approved by the local government (Tierschutzgesetz §11, Abs. 1, Nr. 1, husbandry permit number 35-9185.64/BH Wittbrodt).

Medaka fish larvae used were 0 to 1 day post hatch (stage 40) [41], before the initiation of self-feeding [32]. They were maintained in a constant recirculating system at 28°C on a 14 hours light/10 hours dark cycle in Embryo Rearing Medium (ERM) (17 mM sodium chloride, 0.4 mM potassium chloride, 0.27 mM calcium chloride dihydrate and 0.66 mM magnesium sulphate heptahydrate at pH 7).

Linear-pool-style optomotor response (OMR) setup and protocol

The OMR setup is illustrated in Fig 1A-D. The box is made from extruded aluminum as pillars, PVC sheets as walls, aluminum foil as roof, and stainless steel leveling as feet, all of which were fixed using tapes, and electro-galvanized and passivated steel nuts and bolts. The semi-transparent (70% transmission) linear-pool-arena with a 15-channeled chamber is custom made from plexiglass (PLEXIGLAS® Satinice weiss (snow) WH10 DC). Channels are 5 mm wide, 135 mm long and 5 mm deep.

The linear pool containing one larva per lane was placed on a tablet screen displaying the striped pattern. A camera (CellCam Centro 200MR – Mono Camera) containing a Goyo Optical GM12HR41216MCN lens and an infrared light filter (FI5830-55, Heliopan Filter 5830 | Ø 55 mm, Infrared Filter RG 830 (87C) 830 nm) was mounted above the tablet for video recording. The camera was operated using µManager software (Micro-Manager-2.0.0-gamma1-20210214). Infrared light strips (SECURITY

304 LINE - LED Flex Strip infrared IR 12V IP65 940nm) were placed around the optic to
305 illuminate the arena.
306 See S1 Fig and S2 Fig for blueprint and technical details.
307 After 2 hours of acclimation in the linear-pool-arena with stationary stripes,
308 freshly hatched medaka larvae were exposed to stripe motion. One sequence of stripe
309 motion consisted of 4 phases, in phase 1, the stripes are stationary for 5 seconds, in
310 phase 2, the stripes start to move toward right for 10 seconds, then in phase 3, the
311 stripes pause for 5 seconds, and in phase 4, the stripes move toward left for 10
312 seconds. Prior to testing different stripe conditions, larvae were acclimatized for 10
313 minutes with respective stationary stripes. Note that the direction of stripe movement
314 is only a perspective of the observer and that there is no systematic preference for a
315 given direction.
316 To assess whether stimulation from below can induce an OMR in 0-1 dph Cab
317 strain medaka larvae, 15 larvae were exposed to 8 mm “thick” stripes in two
318 consecutive rounds of 4.3, 6.5, and 8.6 mm/s speed. For testing different stripe width,
319 the same 15 larvae were exposed to two consecutive rounds of 4 and 10 mm stripe
320 width with a speed of 6.5 mm/s.
321 For comparison of OMR between Cab and HdrR medaka strains, 13-15 larvae
322 each were exposed to two consecutive rounds of stripes with 0.8, 1.0, 1.2 and 1.4 mm
323 width and constant speed of 6.5 mm/s (untrained). 15 larvae each were trained by
324 exposure to 11 rounds of stripe motion with 8 mm stripes and constant speed of 6.5
325 mm/s before exposure to stripes with 0.8, 1.0, 1.2 and 1.4 mm width and constant
326 speed of 6.5 mm/s (trained). Note that the “training” works with any regime/stimulus
327 that triggers a response. Here, thicker stripes were selected as the most robust trigger.

For comparison of OMR toward colored stripes among Cab, HdrR, 10-1, 11-2, and 69-1 strains, 15 larvae each were exposed to two consecutive rounds of stripes with 8 mm width, constant speed of 6.5 mm/s and blue/white, red/white, green/white, or black/white color combinations respectively.

All stripes were presented at 100% contrast. All experiments were carried out at 22 degrees Celsius.

Generation of the striped pattern

The striped patterns were generated using a JavaScript-based programme, called *Fish Stripes* (https://junshern.github.io/fish-stripes/). The programme allows for user control of stripe width in the unit of pixels, where 1 pixel corresponds to 0.2 mm, speed in the unit of pixel per frame where 50 frames are programmed to be equivalent to approximately one second, colors in hex code, as well as playing, pausing and reversing stripe movement. Timer functions are also available to each of the play, pause and reverse functions for automation purposes.

Larval tracking and analysis

To track the behavior of larvae, we converted our videos into TIFF files, and analyzed them using Fiji [42]. From the full video, those time frames with stripe motion were extracted. The TIFF stack was processed as follows: first, the first slice of the stack was subtracted from each slice of the stack to remove the background, then median with radius =6 was produced to extract only the fish position. After that, slices of the stack were color-coded using a Fiji plugin (https://github.com/ekatrukha/ZstackDepthColorCode) and a Z-projection was

352 produced to measure the distance covered by the fish and the initial point of the fish
353 swimming behavior (S3 Fig panel A, see below for macro). For the response rate
354 calculation, those larvae with initial position too close to the lane end (within 20% of
355 the lane length) were considered non-valid and not included for the calculation. Those
356 larvae swimming in the direction of stripe motion for more than 20% of the lane length
357 were considered responsive (S3 Fig panel B). Only those larvae considered valid for
358 at least three out of four stripe movements (two rounds implying two stripe movements
359 in both directions) were included for the response rate calculation. The response rate
360 for each larva was calculated as the ratio of the count of responses within four stripe
361 movements to the count of the larva being considered valid within four stripe
362 movements. Statistical analysis (ANOVA, pairwise t-test, Bonferroni corrected) was
363 performed in RStudio [43].
364

365 **Macro for analysis**

366

```
367 //Select the folder with videos (.tif stacks) to be processed
368 showMessage("Select Folder with Videos");
369 openDir = getDirectory("Choose a Directory");
370 //Select the folder to save the final images
371 showMessage("Select Folder to Save");
372 saveDir = getDirectory("Choose a Directory");
373 //Make a list of .tif stacks in the folder
374 list = getFileList(openDir);
375 for (i=0; i<list.length; i++){
```

```
//set batch mode
setBatchMode(true);
//Open .tif stack
open(openDir+list[i]);
Raw_video=getTitle();
//Remove any letters after "." in the title
title = substring(Raw_video, 0, indexOf(Raw_video, "."));
//Choose name for saving the first frame of the stack
savename = title + "_first_slice.tif";
//Duplicate the frames where stripe movement lasts for 10 seconds
run("Duplicate...", "duplicate range=0-200");
Dup_video=getImageID();
//Close unnecessary images
close("\\Others");
//Duplicate the first slice of the stack to produce image to subtract
run("Duplicate...", "slices=1");
Dup_image=getImageID();
//Save the first slice for determining valid fish
selectImage(Dup_image);
saveAs("Tiff", saveDir + savename);
//Subtract the first slice from each slice of the stack
imageCalculator("Subtract create 32-bit stack", Dup_video,Dup_image);
//Reduce noise
run("Median...", "radius=6 stack");
```

```
run("Invert", "stack");
processed_image=getTitle();
selectWindow(processed_image);
//Close unnecessary images
close("\\Others");
//Run Z projection with color coordinate
//Download plugin from https://github.com/ekatrukha/ZstackDepthColorCode (add
https://sites.imagej.net/Ekatrukha/ to the list of update sites)
run("Z-stack Depth Colorcode 0.0.2", "use=Ice generate=[Colorbar with all 256 LUT
colors] output=[Color (RGB)]");
//Run Z Projection with max intensity
selectWindow("Depth_colorcoded_"+processed_image+"");
run("Z Project...", "start=5 projection=[Max Intensity]");
trajectory = getTitle();
//Save the z-projected image
savename_2 = title + "trajectory.tif";
selectWindow(trajectory);
saveAs("Tiff", saveDir + savename_2);
//Close everything
close("*");
}
```

Data visualization

Data visualization and figure assembly was performed using Fiji [42], ggplot2 [44] in RStudio [43], Autodesk Inventor 2024 and Affinity Designer 1.10.5.

Acknowledgments

We thank all current and previous members of the Wittbrodt and Birney labs for their critical, constructive feedback on the procedure and the manuscript. We thank I. Brettell for his great initial input in setting up the pipeline for fish tracking, image processing and analysis. We thank J. S. Chan for writing the *Fish Stripes* software. We thank N. Grammling for helping equipping the setup and are thankful to M. Majewski, E. Leist, S. Erny and A. Saraceno for excellent fish husbandry.

References

1. Wittbrodt J, Shima A, Schartl M. Medaka--a model organism from the far East. Nat Rev Genet. 2002 Jan;3(1):53–64.

2. Kasahara M, Naruse K, Sasaki S, Nakatani Y, Qu W, Ahsan B, et al. The medaka draft genome and insights into vertebrate genome evolution. Nature. 2007 Jun 7;447(7145):714–9.

3. Rembold M, Lahiri K, Foulkes NS, Wittbrodt J. Transgenesis in fish: efficient selection of transgenic fish by co-injection with a fluorescent reporter construct. Nat Protoc. 2006;1(3):1133–9.

4. Cornean A, Gierten J, Welz B, Mateo JL, Thumberger T, Wittbrodt J. Precise in vivo

444 functional analysis of DNA variants with base editing using ACEofBASEs target
445 prediction. Elife. 2022 Apr 4;11. Available from: http://dx.doi.org/10.7554/eLife.72124

446 5. Gücüm S, Sakson R, Hoffmann M, Grote V, Becker C, Pakari K, et al. A patient-based
447 medaka alg2 mutant as a model for hypo-N-glycosylation. Development. 2021 Jun
448 1;148(11). Available from: http://dx.doi.org/10.1242/dev.199385

449 6. Naruse K, Hori H, Shimizu N, Kohara Y, Takeda H. Medaka genomics: a bridge between
450 mutant phenotype and gene function. Mech Dev. 2004 Jul;121(7-8):619–28.

451 7. Spivakov M, Auer TO, Peravali R, Dunham I, Dolle D, Fujiyama A, et al. Genomic and
452 phenotypic characterization of a wild medaka population: towards the establishment of
453 an isogenic population genetic resource in fish. G3 . 2014 Mar 20;4(3):433–45.

454 8. Fitzgerald T, Brettell I, Leger A, Wolf N, Kusminski N, Monahan J, et al. The Medaka
455 Inbred Kiyosu-Karlsruhe (MIKK) panel. Genome Biol. 2022 Feb 21;23(1):59.

456 9. Leger A, Brettell I, Monahan J, Barton C, Wolf N, Kusminski N, et al. Genomic variations
457 and epigenomic landscape of the Medaka Inbred Kiyosu-Karlsruhe (MIKK) panel.
458 Genome Biol. 2022 Feb 21;23(1):58.

459 10. Gierten J, Welz B, Fitzgerald T, Thumberger T, Hummel O, Leger A, et al. Natural
460 genetic variation quantitatively regulates heart rate and dimension. bioRxiv. 2023 Nov 2;
461 Available from: http://dx.doi.org/10.1101/2023.09.01.555906

462 11. Centanin L, Wittbrodt J. Retinal neurogenesis. Development. 2014 Jan;141(2):241–4.

463 12. Centanin L, Ander JJ, Hoeckendorf B, Lust K, Kellner T, Kraemer I, et al. Exclusive
464 multipotency and preferential asymmetric divisions in post-embryonic neural stem cells
465 of the fish retina. Development. 2014 Sep 15;141(18):3472–82.

466 13. Shi D, Tavhelidse T, Thumberger T, Wittbrodt J, Greb T. Bifacial stem cell niches in fish

467 and plants. Curr Opin Genet Dev. 2017 Aug;45:28–33.

468 14. Neuhauss SCF. Behavioral genetic approaches to visual system development and
469 function in zebrafish. J Neurobiol. 2003 Jan;54(1):148–60.

470 15. Orger MB, Gahtan E, Muto A, Page-McCaw P, Smear MC, Baier H. Behavioral
471 screening assays in zebrafish. Methods Cell Biol. 2004;77:53–68.

472 16. Clark DT. Visual responses in developing zebrafish (Brachydanio rerio). University of
473 Oregon [Ph.D thesis]. 1981; Available from:
474 https://www.proquest.com/openview/d13db69af0185e2e2eb48ea843fd44a8/1?cbl=1875
475 0&diss=y&parentSessionId=USUhCip6IAQ83AUROqINd9cu0VAZyBVxVAKPKmDbTqk
476 %3D&pq-
477 origsite=gscholar&parentSessionId=8dDZHST%2BDfIN1q20bRHGpVcB7iCe3F2g9IN1V
478 GUJuPM%3D

479 17. Brockerhoff SE, Hurley JB, Janssen-Bienhold U, Neuhauss SC, Driever W, Dowling JE.
480 A behavioral screen for isolating zebrafish mutants with visual system defects. Proc Natl
481 Acad Sci U S A. 1995 Nov 7;92(23):10545–9.

482 18. Easter SS Jr, Nicola GN. The development of vision in the zebrafish (Danio rerio). Dev
483 Biol. 1996 Dec 15;180(2):646–63.

484 19. Beck JC, Gilland E, Tank DW, Baker R. Quantifying the ontogeny of optokinetic and
485 vestibuloocular behaviors in zebrafish, medaka, and goldfish. J Neurophysiol. 2004
486 Dec;92(6):3546–61.

487 20. Muto A, Orger MB, Wehman AM, Smear MC, Kay JN, Page-McCaw PS, et al. Forward
488 Genetic Analysis of Visual Behavior in Zebrafish. PLoS Genet. 2005;1(5):e66.

489 21. Mueller KP, Schnaedelbach ODR, Russig HD, Neuhauss SCF. VisioTracker, an

490 innovative automated approach to oculomotor analysis. J Vis Exp. 2011 Oct 12;(56).
491 Available from: http://dx.doi.org/10.3791/3556

492 22. Bilotta J. Effects of abnormal lighting on the development of zebrafish visual behavior.
493 Behav Brain Res. 2000 Nov 15;116(1):81–7.

494 23. Carvalho PSM, Noltie DB, Tillitt DE. Ontogenetic improvement of visual function in the
495 medaka Oryzias latipes based on an optomotor testing system for larval and adult fish.
496 Anim Behav. 2002 Jul 1;64(1):1–10.

497 24. Furukawa R, Ijiri K. Swimming behavior of larval Medaka fish under microgravity. Adv
498 Space Res. 2002;30(4):733–8.

499 25. Matsuo M, Ando Y, Kamei Y, Fukamachi S. A semi-automatic and quantitative method
500 to evaluate behavioral photosensitivity in animals based on the optomotor response
501 (OMR). Biol Open. 2018 Jun 19;7(6). Available from:
502 http://dx.doi.org/10.1242/bio.033175

503 26. Xie J, Goodbourn P, Sztal T, Jusuf PR. Neural Endophenotype Assessment in Zebrafish
504 Larvae Using Optomotor and ZebraBox Locomotion Assessment. Methods Mol Biol.
505 2024;2746:213–24.

506 27. Leinonen H, Pham NC, Boyd T, Santoso J, Palczewski K, Vinberg F. Homeostatic
507 plasticity in the retina is associated with maintenance of night vision during retinal
508 degenerative disease. Elife. 2020 Sep 22;9. Available from:
509 http://dx.doi.org/10.7554/eLife.59422

510 28. Roeser T, Baier H. Visuomotor behaviors in larval zebrafish after GFP-guided laser
511 ablation of the optic tectum. J Neurosci. 2003 May 1;23(9):3726–34.

512 29. Matsuda K, Kubo F. Circuit Organization Underlying Optic Flow Processing in Zebrafish.

513 Front Neural Circuits. 2021 Jul 21;15:709048.

514 30. Imada H, Hoki M, Suehiro Y, Okuyama T, Kurabayashi D, Shimada A, et al. Coordinated
515 and cohesive movement of two small conspecific fish induced by eliciting a simultaneous
516 optomotor response. PLoS One. 2010 Jun 22;5(6):e11248.

517 31. Neuhauss SC, Biehlmaier O, Seeliger MW, Das T, Kohler K, Harris WA, et al. Genetic
518 disorders of vision revealed by a behavioral screen of 400 essential loci in zebrafish. J
519 Neurosci. 1999 Oct 1;19(19):8603–15.

520 32. Watanabe A, Myosho T, Ishibashi A, Yamamoto J, Toda M, Onishi Y, et al.
521 Levonorgestrel causes feminization and dose-dependent masculinization in medaka fish
522 (Oryzias latipes): Endocrine-disruption activity and its correlation with sex reversal. Sci
523 Total Environ. 2023 Jun 10;876:162740.

524 33. Vlasiuk A, Asari H. Feedback from retinal ganglion cells to the inner retina. PLoS One.
525 2021 Jul 22;16(7):e0254611.

526 34. Yedutenko M, Howlett MHC, Kamermans M. High Contrast Allows the Retina to
527 Compute More Than Just Contrast. Front Cell Neurosci. 2020;14:595193.

528 35. Gollisch T, Meister M. Eye smarter than scientists believed: neural computations in
529 circuits of the retina. Neuron. 2010 Jan 28;65(2):150–64.

530 36. Poort J, Wilmes KA, Blot A, Chadwick A, Sahani M, Clopath C, et al. Learning and
531 attention increase visual response selectivity through distinct mechanisms. Neuron.
532 2022 Feb 16;110(4):686–97.e6.

533 37. Parker MO, Gaviria J, Haigh A, Millington ME, Brown VJ, Combe FJ, et al.
534 Discrimination reversal and attentional sets in zebrafish (Danio rerio). Behav Brain Res.
535 2012 Jun 15;232(1):264–8.

38. Matsumoto Y, Fukamachi S, Mitani H, Kawamura S. Functional characterization of visual opsin repertoire in Medaka (Oryzias latipes). Gene. 2006 Apr 26;371(2):268–78.

39. Bert B, Chmielewska J, Bergmann S, Busch M, Driever W, Finger-Baier K, et al. Considerations for a European animal welfare standard to evaluate adverse phenotypes in teleost fish. EMBO J. 2016 Jun 1;35(11):1151–4.

40. Koster R, Stick R, Loosli F, Wittbrodt J. Medaka spalt acts as a target gene of hedgehog signaling. Development. 1997 Aug;124(16):3147–56.

41. Iwamatsu T. Stages of normal development in the medaka Oryzias latipes. Mech Dev. 2004 Jul;121(7-8):605–18.

42. Schindelin J, Arganda-Carreras I, Frise E, Kaynig V, Longair M, Pietzsch T, et al. Fiji: an open-source platform for biological-image analysis. Nat Methods. 2012 Jun 28;9(7):676–82.

43. Team R. RStudio: Integrated Development Environment for R. In Team R; 2020. Available from: http://dx.doi.org/10.1109/ICAC3N53548.2021.9725647

44. Wickham H. Data Analysis. In: Wickham H, editor. ggplot2: Elegant Graphics for Data Analysis. Cham: Springer International Publishing; 2016. p. 189–201.

Supporting information

S1 Fig. Technical drawing of the linear-pool-style optomotor response (OMR) setup.

S2 Fig. Technical drawing of the linear-pool-arena.

S3 Fig. Image processing and analysis scheme. (A) Tiff stack was processed using Fiji as follows. First slice of the stack was duplicated and subtracted from each slice of the stack to subtract the background. Subsequently, noise reduction using median filter and inversion were performed. Lastly, Depth color code plugin and Z projection were used to visualize larval swimming trajectories. (B) For image analysis, the first slice of the stack was used to classify larvae as either valid or non-valid for response rate calculation. Those larvae located more than 27 mm from the lane end (corresponding to 20% of the lane length) were counted as valid (yellow circles). Those larvae located close to the lane end were considered as non-valid (red circles). Z projection images were used to classify larvae as either responsive or non-responsive. Those larvae swimming in the direction of stripe motion for at least 20% of the lane length were considered as responsive (green circles). Arrow indicates direction of stripe movement.

S1 File. Classification of individual response.

S2 File. Datapoints of Figure 2.

S3 File. Datapoints of Figure 3.

S4 File. Datapoints of Figure 4.

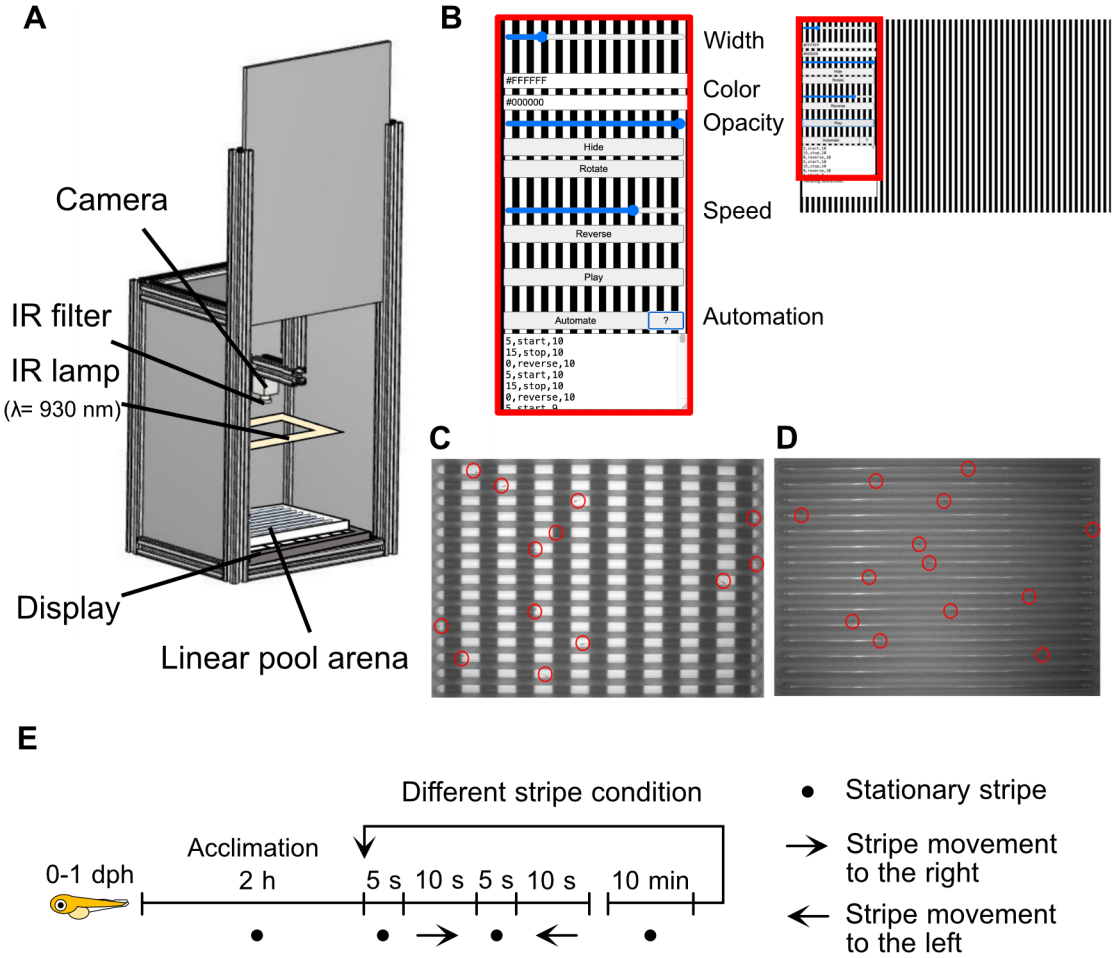
A
Camera
IR filter
IR lamp
(λ= 930 nm)
Display
Linear pool arena
B
#FFFFFF
#000000
Hide
Rotate
Reverse
Play
Automate
?
5,start,10
15,stop,10
0,reverse,10
5,start,10
15,stop,10
0,reverse,10
Width
Color
Opacity
Speed
Automation
C
D
E
Different stripe condition
0-1 dph
Acclimation
2 h
5 s
10 s
5 s
10 s
10 min
Stationary stripe
Stripe movement
to the right
Stripe movement
to the left

Figure 1

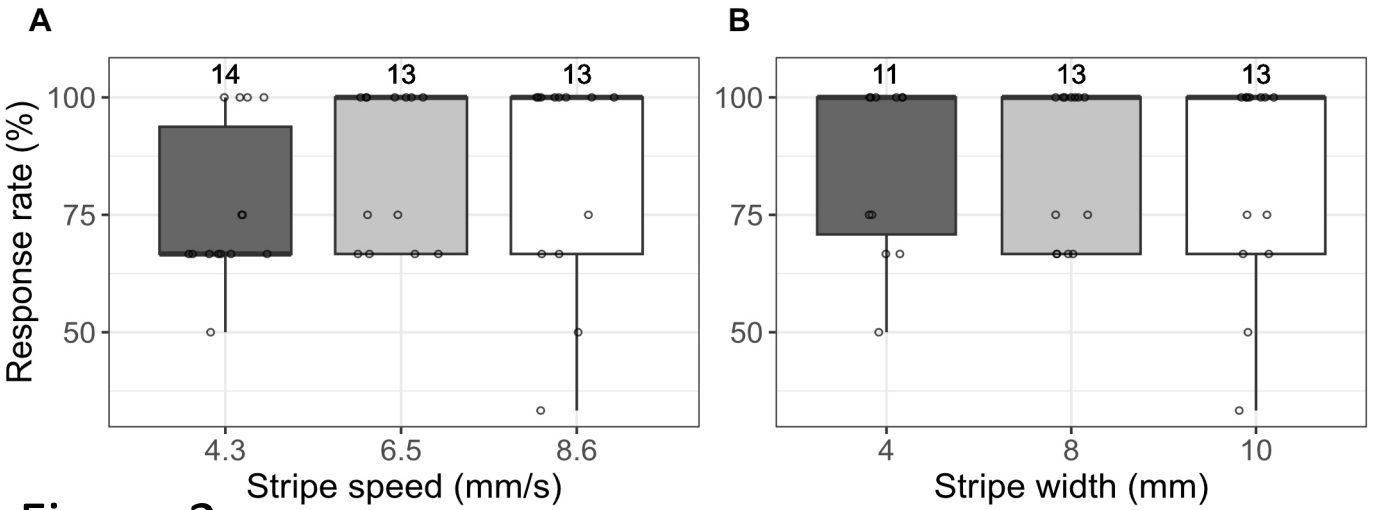
A
B
14
13
13
11
13
13
100
75
50
Response rate (%)
4.3
6.5
8.6
Stripe speed (mm/s)
4
8
10
Stripe width (mm)

Figure 2

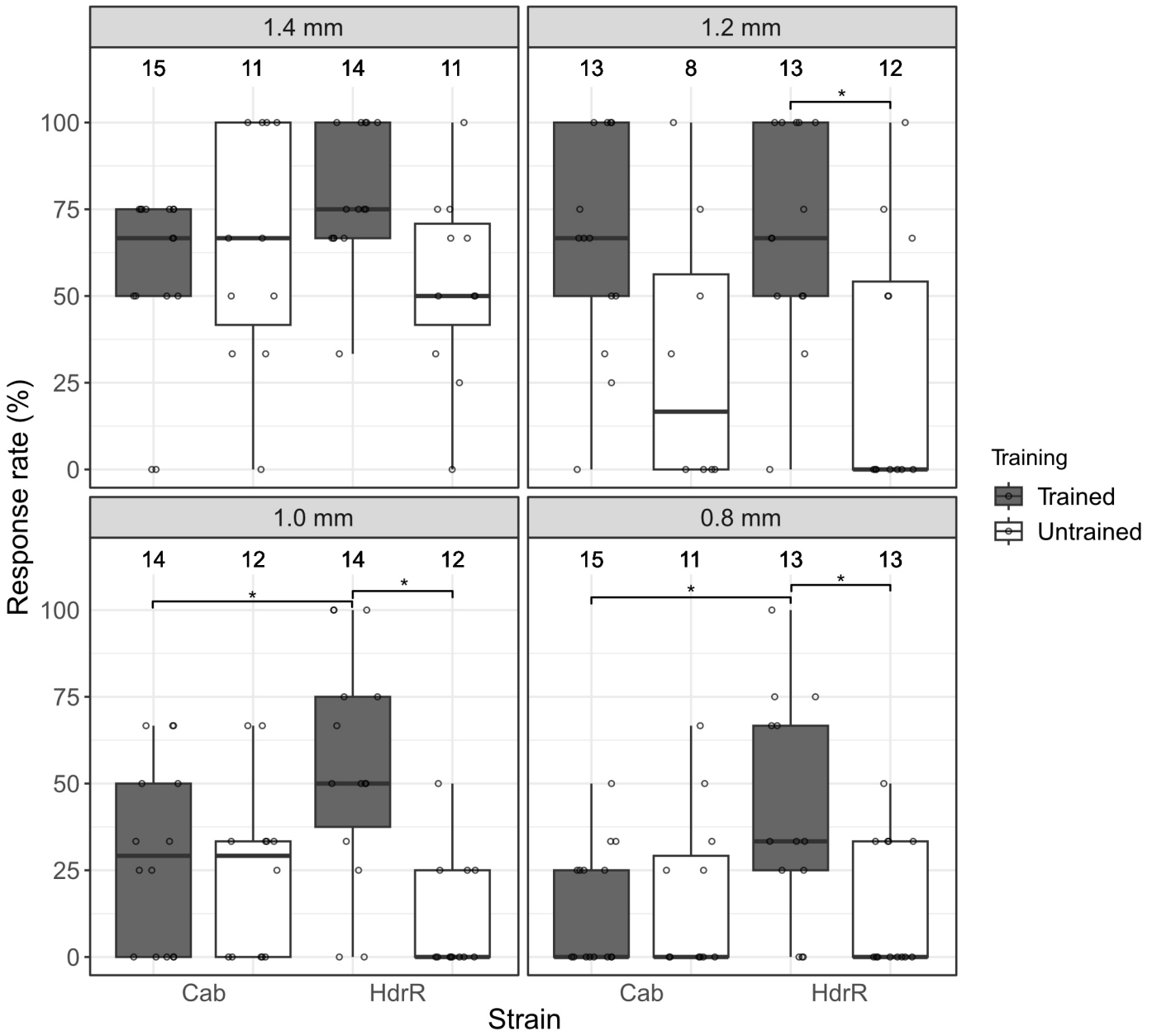
1.4 mm
1.2 mm
1.0 mm
0.8 mm
15
11
14
11
13
8
13
12
14
12
14
12
15
11
13
13
*
Response rate (%)
100
75
50
25
0
Cab
HdrR
Strain
Training
Trained
Untrained

Figure 3

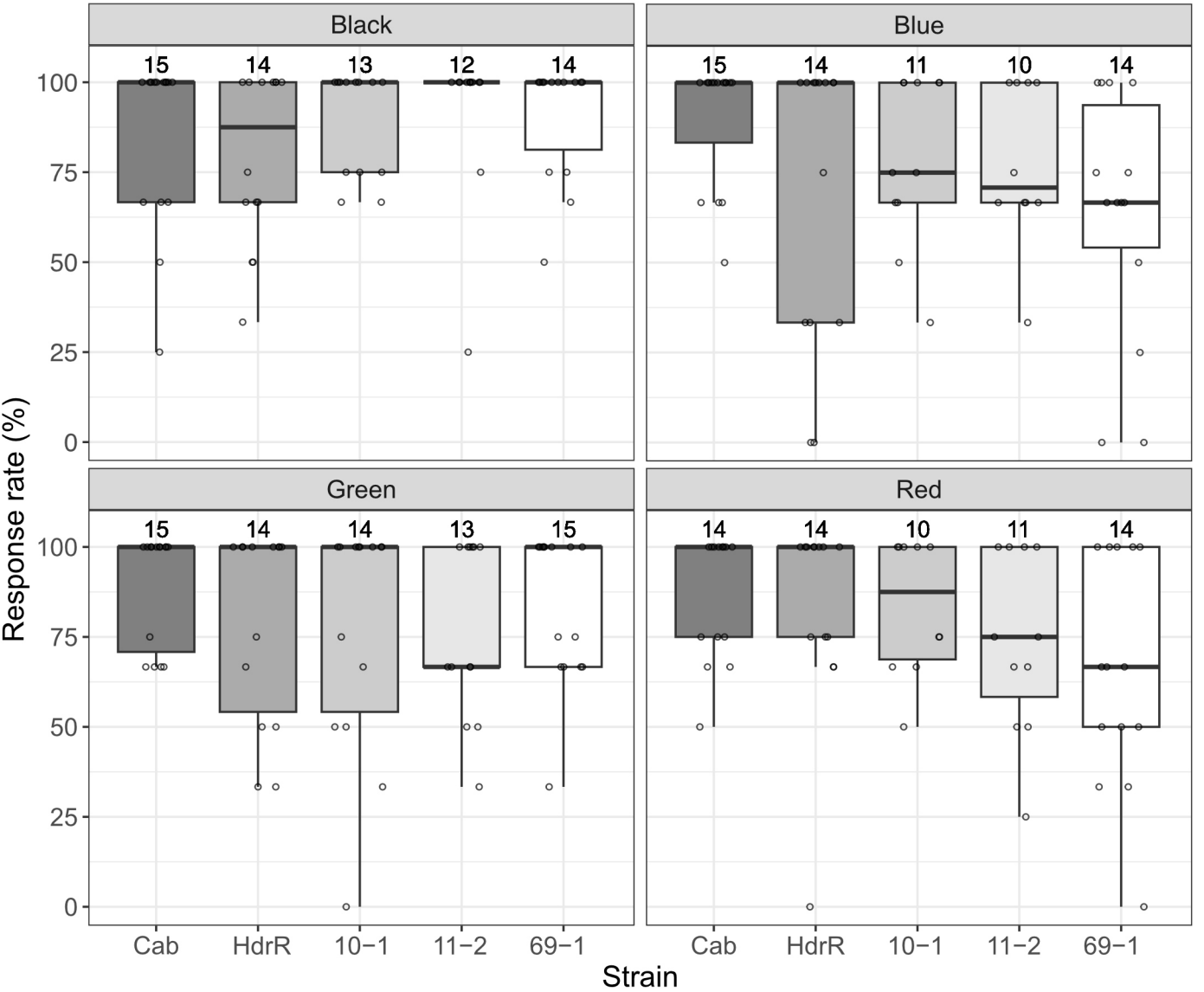
Black
Blue
Green
Red
15
14
13
12
14
15
14
11
10
14
15
14
14
13
15
14
14
10
11
14
100
75
50
25
0
Response rate (%)
Cab
HdrR
10−1
11−2
69−1
Strain

Figure 4

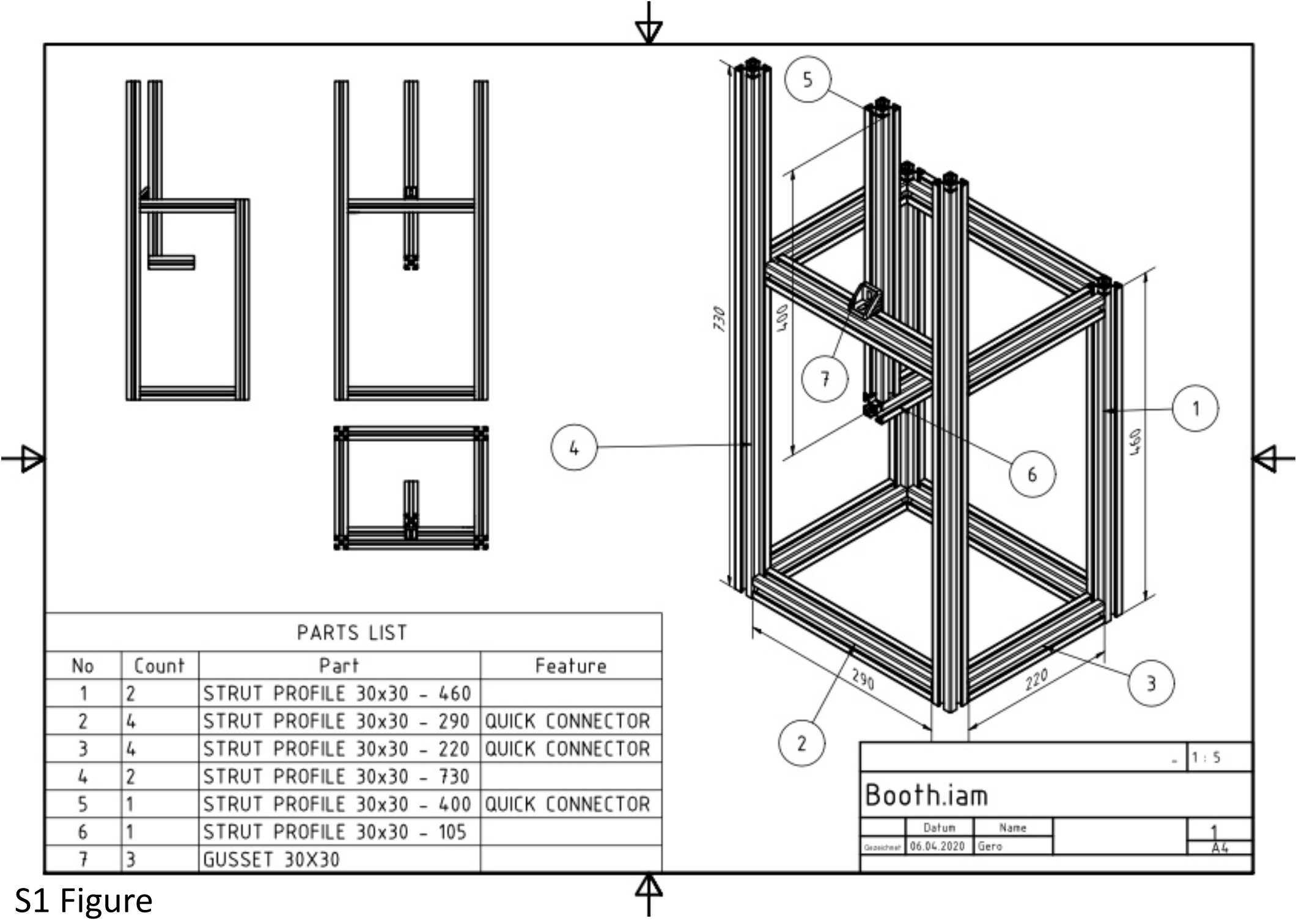

PARTS LIST

No	Count	Part	Feature
1	2	STRUT PROFILE 30x30 - 460	
2	4	STRUT PROFILE 30x30 - 290	QUICK CONNECTOR
3	4	STRUT PROFILE 30x30 - 220	QUICK CONNECTOR
4	2	STRUT PROFILE 30x30 - 730	
5	1	STRUT PROFILE 30x30 - 400	QUICK CONNECTOR
6	1	STRUT PROFILE 30x30 - 105	
7	3	GUSSET 30X30	

S1 Figure

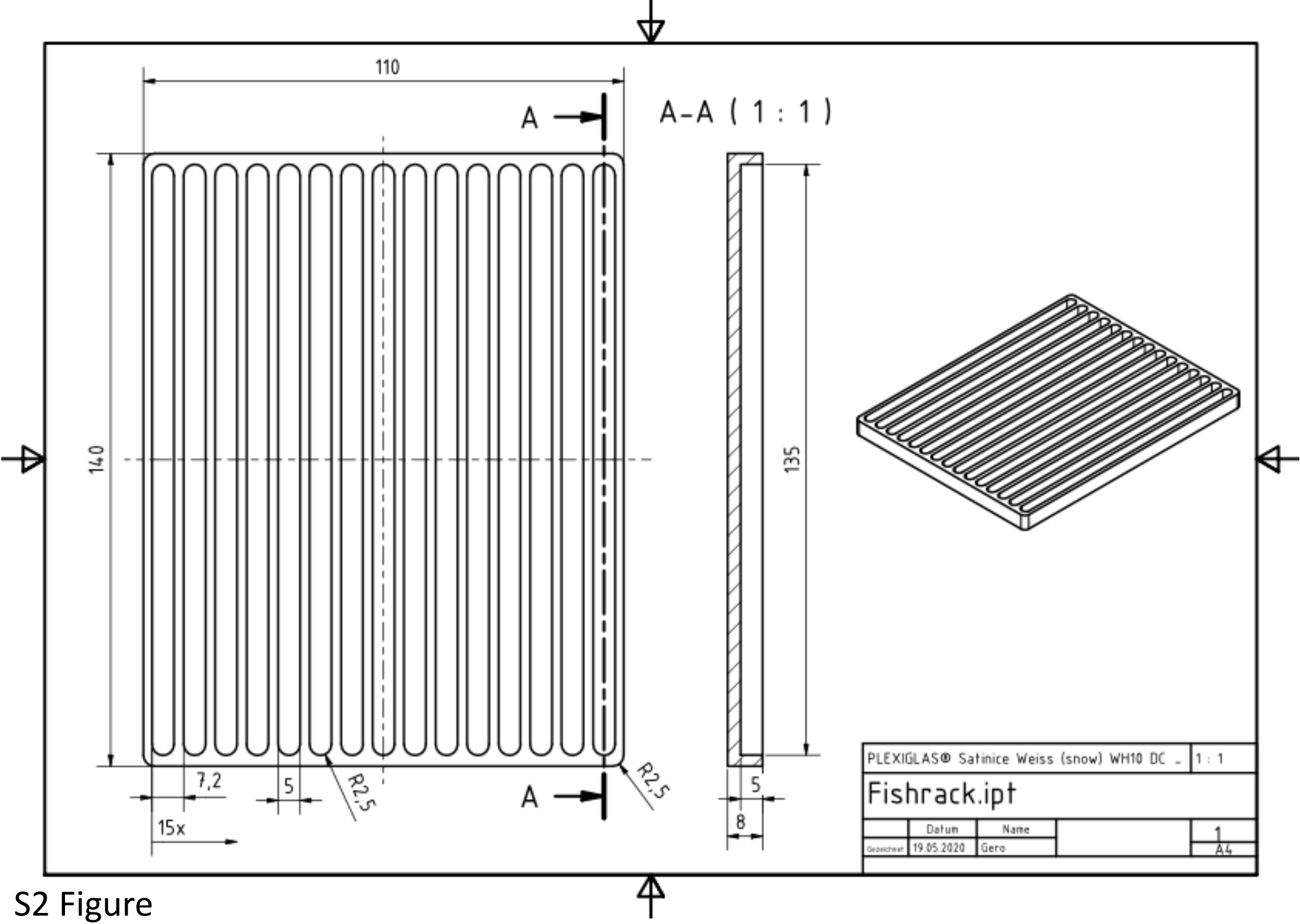
110
A
A-A (1 : 1)
140
135
7,2
5
R2,5
15x
A
R2,5
5
8
PLEXIGLAS® Satinice Weiss (snow) WH10 DC
1 : 1
Fishrack.ipt
Datum
Name
Gezeichnet
19.05.2020
Gero
1
A4

S2 Figure

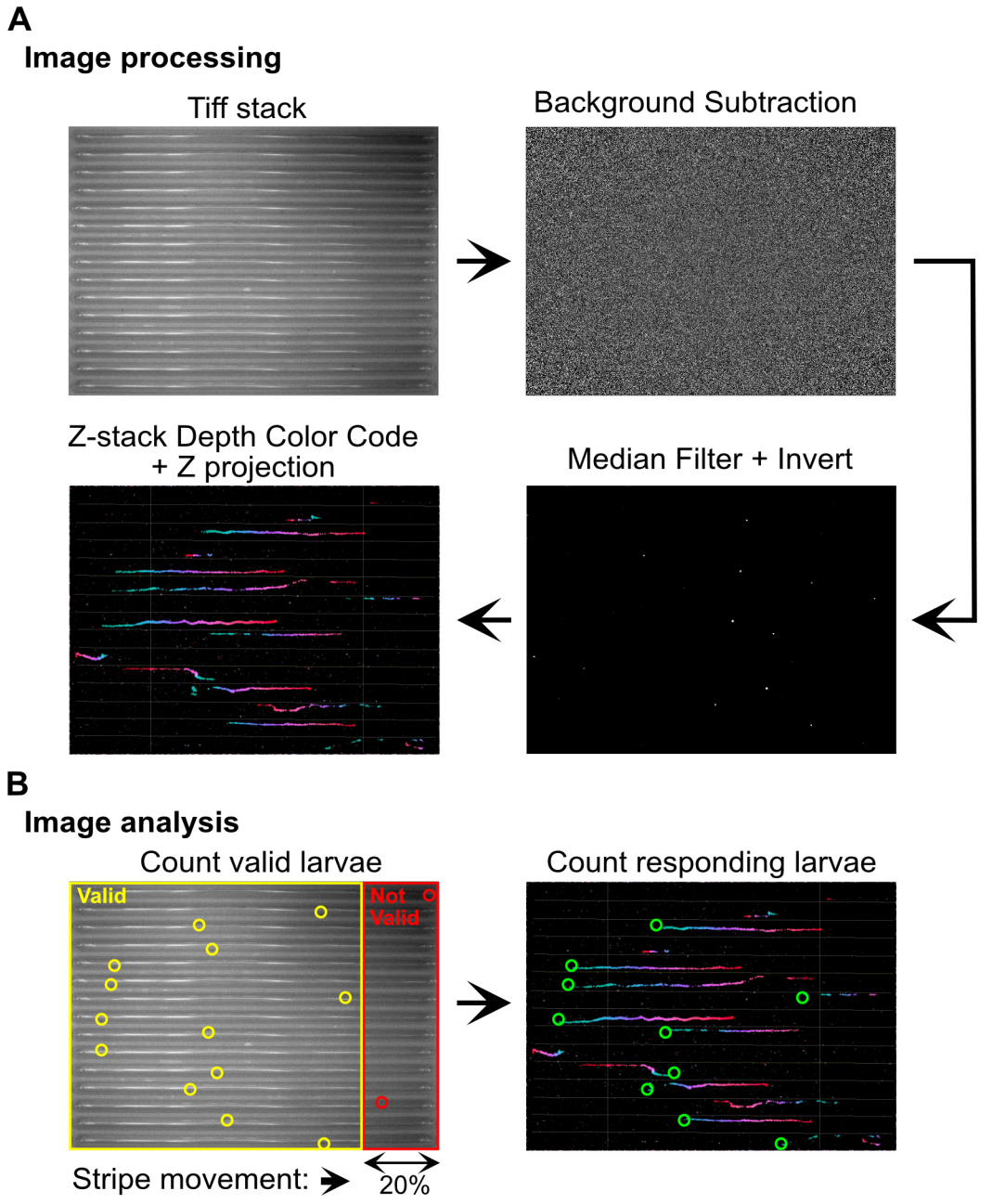
A
Image processing
Tiff stack
Background Subtraction
Z-stack Depth Color Code
+ Z projection
Median Filter + Invert
B
Image analysis
Count valid larvae
Valid
Not
Valid
Count responding larvae
Stripe movement:
20%

S3 Figure