Characterizing medaka visual features using a high-throughput optomotor response assay

Risa Suzuki[1,2], Jia Zheng Woo[1,#a], Thomas Thumberger[1], Gero Hofmann[1], Joachim Wittbrodt[1,*] and Tinatini Tavhelidse-Suck[1,*]

[1]Centre for Organismal Studies (COS), Heidelberg University, Heidelberg, Germany

[2]Heidelberg Biosciences International Graduate School (HBIGS), Heidelberg, Germany

[#a]Current Address: Department of Biochemistry, Stanford University, Stanford, California, USA

*corresponding authors

E-mail: jochen.wittbrodt@cos.uni-heidelberg.de (JW), tinatini.tavhelidse@cos.uni-heidelberg.de (TTS)

Abstract

Medaka fish (*Oryzias latipes*) is a powerful model to study genetics underlying the developmental and functional traits of the vertebrate visual system. We established a simple and high-throughput optomotor response (OMR) assay utilizing medaka larvae to study visual functions including visual acuity and contrast sensitivity. Our assay presents multiple adjustable stripes in motion to individual fish in a linear arena. For that the OMR assay employs a tablet display and the *Fish Stripes* software to adjust speed, width, color, and contrast of the stripes. Our results demonstrated that optomotor responses were robustly induced by black and white stripes presented from below in the linear-pool-arena. We detected robust strain specific differences in the OMR when comparing long established medaka inbred strains. We observed an interesting training effect upon the initial exposure of larvae to thick stripes, which allowed them to better respond to narrower stripes. The OMR setup and protocol presented here provide an efficient tool for quantitative phenotype mapping, addressing visual acuity, trainability of cortical neurons, locomotor response, retinal regeneration and others. Our open-source setup presented here provides a crucial prerequisite for ultimately addressing the genetic basis of those processes.

Introduction

The teleost medaka (*Oryzias latipes*) is a vertebrate model widely used in basic as well as biomedical research. The advantages of medaka as a vertebrate genetic model system include short generation time, transparent embryos, numerous offspring, a small genome size (about 700 Mb) and easy husbandry [1,2]. The full repertoire of

genome editing tools is available to generate transgenic lines, gene knockout models or human disease models [3–5]. In addition, its high tolerance towards inbreeding enabled the establishment of the first near-isogenic vertebrate population panel [1,6–9] to explore the genetics underlying a given phenotype [10]. These features make medaka an ideal model for population genomic studies, drug screens and toxicology studies.

Retinal architecture and development are remarkably conserved among all vertebrates. The development, structure and function of the medaka retina has been studied extensively and in great molecular detail [11–13]. For evaluating visual function, behavioral assays have been established as indispensable tools [14,15]. The optokinetic response (OKR) assay is one of the classical assays where the reflexive eye movements of immobilized animals are analyzed while the eyes are being exposed to alternating black and white stripes placed on a rotating drum [16–21]. In contrast, the optomotor response (OMR) assay evaluates the behavioral locomotor response of animals stimulated by moving black and white stripe patterns. In those assays, visual functions such as spatial resolution or acuity and temporal resolution are evaluated by adjusting stripe width, the speed of stripe movement and the intensity of light exposure [16,22–26]. OKR and OMR assays have been used in studies to explore the genetic and molecular mechanisms underlying retinal development [23], retinal degenerative disease [27], neural activities [28], as well as animal behavior [29] in various models.

In order to explore the genetics underlying visual sensory related phenotypes a high-throughput method to determine optical features of the individual is indispensable. OKR however has limited throughput due to the immobilization step. Moreover, despite the suitability of OMR for large scale and high-throughput studies given its simplicity,

the majority of studies using OMR employ a drum setup with apparent limitations in the throughput.

In the drum-style OMR, a series of alternating black and white stripes rotates around a single animal, in response to which the animal follows the direction of the rotating stripes [23]. One successful instance of using OMR in a high-throughput study was done by Neuhauss et al. [30] where up to a hundred zebrafish larvae were simultaneously placed in a chamber above a flat monitor displaying alternating black and white stripes moving linearly towards one direction. This experimental design enabled screening and identifying zebrafish mutants with visual defects. Yet the setup does not allow the evaluation of the visual features at the level of the individual. The setup is furthermore not designed to eliminate additional stimuli such as the interaction between larvae.

To elucidate the features of individual medaka larvae we established a linear-pool-style OMR assay combining a tablet with full control of all features (stripe width, speed, color and contrast) with a linear-pool-arena with 15 separate lanes to characterize the basic features of fish eyes, such as visual acuity and contrast sensitivity in a highly parallel manner.

Results

OMR has been utilized for juvenile and adult medaka fish to evaluate their behavior as well as visual functions [23,29]. In these studies, drum-style OMR which restricts the scalability of the assay, was employed where the fish were placed in a tank inside of a drum showing a moving stripe pattern eliciting a strong behavioral response.

Here, we developed a linear-pool-style OMR setup and protocol for large scale and high-throughput experiments on individual larvae. In the linear-pool-style OMR, the OMR is evoked by stripe motion displayed below the linear pool on a screen. Our open-source *Fish Stripes* software allows full control of stripe parameters (width, speed, color and contrast) (Fig 1A, B, S1 Fig). Videos are acquired using a camera (CellCam Centro 200MR) with an infrared (IR) filter and an IR lamp. Data are analysed with the analysis macro (see Materials and methods). With this setup, 15 individual larvae can be tested at a time which are placed individually in each lane of the linear pool (Fig 1C, D, S2 Fig).

Fig 1. The linear-pool-style optomotor response (OMR) setup. (A) Illustration of the linear-pool-style OMR setup: A PVC box containing a display (e.g. tablet) and the 140 mm x 110 mm linear-pool-arena on top. A camera (CellCam Centro 200MR) with an infrared (IR) filter and an IR lamp are used to acquire the videos. The box is closed on all sides to exclude external visual stimuli from the surrounding. (B) Stripe pattern displayed on the tablet screen. Stripe parameters (width in pixels, stripe color 1 and stripe color 2 in hex code, contrast ("opacity") (x 100%) and speed (x 50 pixel/s)) are set and automated using the *Fish Stripes* software. (C-D) Images of the linear-pool-arena placed on top of a tablet screen displaying black and white stripe pattern acquired with a camera without (C) and with IR filter (D). The lanes of the linear-pool-arena are oriented at 90° towards the moving stripe pattern. The larvae are marked with red circles. (E) Experimental timeline. 0-1 days post hatch (dph) larvae were acclimatized for 2 hours in the setup while being presented stationary stripes before start of the experiment composed of 5 s stationary stripes, followed by 10 s of stripes

moving to the right, 5 s stationary stripes, 10 s of stripes moving to the left. Prior to testing additional stripe conditions, larvae were acclimatized for 10 minutes with respective stationary stripes.

The larvae were placed in the linear-pool-arena 2 hours prior to the onset of stripe motion with the display showing stationary stripes (acclimation period). In each experiment, stripe motion consists of 4 phases: in phase 1, the stripes are stationary for 5 seconds, in phase 2, the stripes start to move toward right for 10 seconds, in phase 3, the stripes pause for 5 seconds, and in phase 4, the stripes move toward left for 10 seconds. Prior to testing different stripe conditions, larvae were acclimatized for 10 minutes with respective stationary stripes (Fig 1E).

In order to allow enough space for responding, only those larvae with a minimal distance of 27 mm from the end of the lane were considered valid. Those larvae swimming in the direction of stripe motion for at least 20% (27 mm) of the lane length after the initiation of stripe movement were considered as responders. The response rate was calculated as the ratio of the number of responders to the number of valid larvae (S3 Fig).

To assess whether the stimulation from below can induce OMR in freshly hatched Cab strain medaka larvae (0-1 days post hatch (dph), before the initiation of self-feeding [31]), we exposed 15 larvae to black and white 8 mm “thick” stripes of three different speeds: 4.3, 6.5 and 8.6 mm/s (Fig 2A-C) and stripes of three distinct widths: 4, 8 and 10 mm with a speed of 6.5 mm/s (Fig 2D-F).

Fig 2. Medaka Cab strain shows a robust OMR induced by stimulation from below. (A-B) Percentages of larvae that responded to the moving stripes to the right (white) or the left (gray) direction with three different stripe speeds and a constant stripe width of 8 mm in the first (A) and second (B) replicate. (C) Average of the response rate towards the moving stripes in right and left direction with three distinct stripe speeds in two replicates. (D-E) Percentages of larvae that responded to the moving stripes to the right (white) or the left (gray) direction with three different stripe widths and a constant stripe speed of 6.5 mm/s in the first (D) and second (E) replicate. (F) Average of the response rate towards the moving stripes in right and left direction with three distinct stripe widths in two replicates. Number above each column represents the response rate (%), number of valid larvae in parentheses. Cab strain medaka responded robustly toward black and white stripes at stripe speeds between 4.3 and 8.6 mm/s and stripe widths between 4 and 10 mm.

Cab strain medaka showed a robust OMR (75.6 % - 87.2 % of the fish responding to the stripe motion) regardless of stripe width or speed tested (Fig 2. C and F). The highest response rate was observed when the stripes were 8 mm wide with a speed of 6.5 mm/s. Therefore, stripe speed was set to 6.5 mm/s for the following experiments to assess the threshold for stripe width - and hence visual acuity - where fish no longer recognize a “thin” stripe as a stripe and as a consequence no longer show OMR.

In addition to Cab strain medaka, the HdrR strain, a traditional inbred strain originated from Southern Japan, is also commonly used as a wildtype [7]. To test the hypothesis whether visual features are genetically encoded, we used the setup to

compare the response between Cab and HdrR strain medaka. 13-15 larvae of each strain were exposed to stripes of 1.4, 1.2, 1.0 and 0.8 mm width respectively (Fig 3A, B). 60.9% of Cab strain medaka responded to stripes with 1.4 mm width and then gradually decreased to 33.0% (1.2 mm), 20.5% (1.0 mm), and 16.4% (0.8 mm) response rate (Fig 3A, S4 Fig panels A, B). 49.2% of HdrR strain medaka responded to stripes with 1.4 mm width which decreased to 31.4% (1.2 mm), 10.5% (1.0 mm) and 16.0% (0.8 mm) response rate (Fig 3B, S4 Fig panels E, F). While Cab strain medaka showed a higher response rate towards stripes of 1.4, 1.2 and 1.0 mm width compared to the HdrR strain, the overall response rate in both strains decreased with decreasing stripe width.

Fig 3. HdrR strain medaka show higher trainability in their OMR towards narrow stripes than Cab strain medaka. Average response rates of Cab (A) and HdrR (B) strain larvae to moving stripes for each stripe width (1.4, 1.2, 1.0 and 0.8 mm) without prior exposure to thick stripe (8 mm) motion. The response rate gradually decreased with decreasing stripe width both in Cab and HdrR strain medaka. Average response rates of Cab (C) and HdrR (D) strain larvae to moving stripes in each stripe width (1.4, 1.2, 1.0 and 0.8 mm) with prior exposure to thick stripe (8 mm) motion. After the training with thick stripes, an increase in response rate was observed both in Cab and HdrR, with a more prominent increase in HdrR. Number above each column represents the response rate (%). For details see also S4 Fig.

In order to test whether the OMR to different stripe widths is a trainable feature, we extensively exposed 13-15 larvae of each strain to “thick” stripes (8 mm width) for

more than 10 times before they were subjected to stripe widths of 1.4, 1.2, 1.0 and 0.8 mm respectively.

In the Cab strain, the response rate toward the thinner stripes increased to 64.8% (1.2 mm) and 30.8% (1.0 mm) but didn't increase for stripe widths of 1.4 mm (58.5%) and 0.8 mm (15.2%) (Fig 3C, S4 Fig panels C, D).

Strikingly, after training, HdrR larvae were much more sensitive to thin stripes, showing an even higher increase in the response rate (43.1% of the individuals responding to the narrowest stripe (0.8 mm), 78.5% (1.4 mm), 66.4% (1.2 mm) and 54.5 % (1.0 mm)) (Fig 3D, S4 Fig panels G, H). These results indicate first, that indeed OMR to different stripe widths is a trainable feature and second, that there is a difference in trainability among different inbred medaka strains.

Discussion

In this study we developed an easy and high-throughput assay for investigating medaka's visual function using OMR. With our linear-pool-setup employing the open-source *Fish Stripes* software that generates moving stripe patterns and the analysis macro, we provide a full package to easily assess visual features such as visual acuity or color sensitivity for aquatic animals.

In our setup, OMR is robustly induced in 0-1 dph medaka larvae using black and white stripes presented from below, regardless of the stripe speed or width as long as it was thick enough (4 - 10 mm) and at adequate speed (4.3 - 8.6 mm/s). So far OMR in medaka has been elicited by presenting stripes rotating around the individual and has preferentially been shown only from 5 dph onwards [23,24,29]. In contrast to earlier reports [23], we show a robust OMR in different strains already at 0-1 dph.

213 This response in earlier stages may be due to the longer acclimation time
214 improving the response rate. With a short acclimation time of less than 30 minutes,
215 Cab strain medaka showed a decrease in the number of responders.

216 Testing visual properties of Cab and HdrR strain medaka by OMR using narrow
217 stripes showed that the response rate depends on the stripe width. Strikingly, we
218 uncover a strain-specific trainability of OMR with HdrR strain medaka larvae being
219 more sensitive to narrow stripes after training. This aligns well with previous findings
220 on strain-specific differences in visual acuity [24].

221 This trainability is possibly due to the enhancement in retinal computation or the
222 increase in the selectivity of cortical neurons for visual stimuli. The vertebrate retina
223 does not only function as signal transmitter to the brain but also adapts to light and
224 sharpens the image and has its own feedback loop between cells to compute the signal
225 and adjust depending on the stimulus [32]. Possibly, through the training period,
226 contrast gain control and adaptation are acquired by retinal ganglion cells, which
227 enhances the computational ability of the retina itself [33,34]. Trainability in cognitive
228 function is well studied in mammals as they learn to distinguish task-relevant visual
229 stimuli and the timing to pay attention to the environment, which in return causes a
230 significant change in their early sensory cortical neurons [35]. As the formation and
231 maintenance of attention to visual stimuli has also been reported in fish, the training
232 effect could be explained as due to the increase in the awareness and attention to the
233 environment [36].

234 Here, we established a straightforward, easy-to-recreate and -use, high-
235 throughput OMR-based protocol to study behaviors that are dependent on visual input
236 across medaka and other aquatic species. The 15-lane linear-pool-arena allows

237 parallel assessment of visual parameters at the level of the individual. Thus, this setup
238 provides the basis to address the underlying genetics of various phenotypes not only
239 limited to visual acuity or color sensitivity but also of more complex traits such as retinal
240 regeneration, neuronal selectivity and trainability.
241

242 Materials and methods

243 Medaka stocks and maintenance

244 All medaka strains are maintained in closed stocks at Heidelberg University. Medaka
245 husbandry (permit number 35–9185.64/BH Wittbrodt) was performed according to
246 local animal welfare standards (Tierschutzgesetz §11, Abs. 1, Nr. 1) and in accordance
247 with European Union animal welfare guidelines [37]. The fish facility is under the
248 supervision of the local representative of the animal welfare agency.
249 Medaka (*O. latipes*) fish were bred and maintained as previously described [38].
250 The two isogenic medaka strains used in this study were Cab and HdrR-II1 (strainID:
251 IB178) was supplied by NBRP Medaka (https://shigen.nig.ac.jp/medaka/). All
252 experimental procedures were performed according to the guidelines of the German
253 animal welfare law and approved by the local government (Tierschutzgesetz §11, Abs.
254 1, Nr. 1, husbandry permit number 35-9185.64/BH Wittbrodt).
255 Medaka fish larvae used were 0 to 1 day post hatch (stage 40) [39], before the
256 initiation of self-feeding [31]. They were maintained in a constant recirculating system
257 at 28°C on a 14 hours light/10 hours dark cycle in Embryo Rearing Medium (ERM) (17
258 mM sodium chloride, 0.4 mM potassium chloride, 0.27 mM calcium chloride dihydrate
259 and 0.66 mM magnesium sulphate heptahydrate at pH 7).

Linear-pool-style optomotor response (OMR) setup and protocol

The OMR setup is illustrated in Fig 1A-D. The box is made from extruded aluminum as pillars, PVC sheets as walls, aluminum foil as roof, and stainless steel leveling as feet, all of which were fixed using tapes, and electro-galvanized and passivated steel nuts and bolts. The semi-transparent (70% transmission) linear-pool-arena with a 15-channeled chamber is custom made from plexiglass (PLEXIGLAS® Satinice weiss (snow) WH10 DC.) Channels are 5 mm wide, 135 mm long and 5 mm deep.

The linear pool containing one larva per lane was placed on a tablet screen displaying the striped pattern. A camera (CellCam Centro 200MR – Mono Camera) containing a Goyo Optical GM12HR41216MCN lens and an infrared light filter (FI5830-55, Heliopan Filter 5830 | Ø 55 mm, Infrared Filter RG 830 (87C) 830 nm) was mounted above the tablet for video recording. The camera was operated using μManager software (Micro-Manager-2.0.0-gamma1-20210214). Infrared light strips (SECURITY LINE - LED Flex Strip infrared IR 12V IP65 940nm) were placed around the optic to illuminate the arena.

See S1 Fig and S2 Fig for blueprint and technical details.

After 2 hours of acclimation in the linear-pool-arena with stationary stripes, freshly hatched medaka larvae were exposed to stripe motion. One sequence of stripe motion consisted of 4 phases, in phase 1, the stripes were stationary for 5 seconds, in phase 2, the stripes start to move toward right for 10 seconds, then in phase 3, the stripes pause for 5 seconds, and in phase 4, the stripes move toward left for 10 seconds. Prior to testing different stripe conditions, larvae were acclimatized for 10 minutes with respective stationary stripes.

To assess whether stimulation from below can induce an OMR in 0-1 dph Cab strain medaka larvae, 15 larvae were exposed to 8 mm “thick” stripes in two consecutive rounds of 4.3, 6.5, and 8.6 mm/s speed. For testing different stripe width, the same 15 larvae were exposed to two consecutive rounds of 4 and 10 mm stripe width with a speed of 6.5 mm/s.

For comparison of OMR between Cab and HdrR medaka strains, 13-15 larvae each were exposed to two consecutive rounds of stripes with 0.8, 1.0, 1.2, and 1.4 mm width and constant speed of 6.5 mm/s (untrained). 15 larvae each were trained by exposure to 11 rounds of stripe motion with 8 mm stripes and constant speed of 6.5 mm/s before exposure to stripes with 0.8, 1.0, 1.2, and 1.4 mm width and constant speed of 6.5 mm/s (trained).

All experiments were carried out at room temperature.

Generation of the striped pattern

The striped patterns were generated using a JavaScript-based programme, called *Fish Stripes* (https://junshern.github.io/fish-stripes/). The programme allows for user control of stripe width in the unit of pixels, where 1 pixel corresponds to 0.2 mm, speed in the unit of pixel per frame where 50 frames are programmed to be equivalent to approximately one second, colors in hex code, as well as playing, pausing and reversing stripe movement. Timer functions are also available to each of the play, pause and reverse functions for automation purposes.

Larval tracking and analysis

To track the behavior of larvae, we converted our videos into TIFF files, and analyzed them using Fiji [40]. From the full video, those time frames with stripe motion were extracted. The TIFF stack was processed as follows: first, the first slice of the stack was subtracted from each slice of the stack to remove the background, then median with radius =6 was produced to extract only the fish position. After that, slices of the stack were color-coded using a Fiji plugin (https://github.com/ekatrukha/ZstackDepthColorCode) and a Z-projection was produced to measure the distance covered by the fish and the initial point of the fish swimming behavior (S3 Fig panel A, see below for macro). The response rate was calculated as the ratio of "responders" to "total number of valid fish". For the calculation, those fish with initial position too close to the lane end (within 20% of the lane length) were discarded, leaving the number of “valid fish”. Those fish swimming in the direction of stripe motion for more than 20% of the lane length were considered as "responders" (S3 Fig panel B).

Macro for analysis

```
//Select the folder with videos (.tif stacks) to be processed
showMessage("Select Folder with Videos");
openDir = getDirectory("Choose a Directory");
//Select the folder to save the final images
showMessage("Select Folder to Save");
saveDir = getDirectory("Choose a Directory");
```

```
//Make a list of .tif stacks in the folder
list = getFileList(openDir);
for (i=0; i<list.length; i++){
//set batch mode
setBatchMode(true);
//Open .tif stack
open(openDir+list[i]);
Raw_video=getTitle();
//Remove any letters after "." in the title
title = substring(Raw_video, 0, indexOf(Raw_video, "."));
//Choose name for saving the first frame of the stack
savename = title + "_first_slice.tif";
//Duplicate the frames where stripe movement lasts for 10 seconds
run("Duplicate...", "duplicate range=0-200");
Dup_video=getImageID();
//Close unnecessary images
close("\\Others");
//Duplicate the first slice of the stack to produce image to subtract
run("Duplicate...", "slices=1");
Dup_image=getImageID();
//Save the first slice for determining valid fish
selectImage(Dup_image);
saveAs("Tiff", saveDir + savename);
//Subtract the first slice from each slice of the stack
```

```
imageCalculator("Subtract create 32-bit stack", Dup_video,Dup_image);
//Reduce noise
run("Median...", "radius=6 stack");
run("Invert", "stack");
processed_image=getTitle();
selectWindow(processed_image);
//Close unnecessary images
close("\\Others");
//Run Z projection with color coordinate
//Download plugin from https://github.com/ekatrukha/ZstackDepthColorCode (add
https://sites.imagej.net/Ekatrukha/ to the list of update sites)
run("Z-stack Depth Colorcode 0.0.2", "use=Ice generate=[Colorbar with all 256 LUT
colors] output=[Color (RGB)]");
//Run Z Projection with max intensity
selectWindow("Depth_colorcoded_"+processed_image+"");
run("Z Project...", "start=5 projection=[Max Intensity]");
trajectory = getTitle();
//Save the z-projected image
savename_2 = title + "trajectory.tif";
selectWindow(trajectory);
saveAs("Tiff", saveDir + savename_2);
//Close everything
close("*");
}
```

Data visualization

Data visualization and figure assembly was performed using Fiji [40], ggplot2 [41] in RStudio [42], Autodesk Inventor 2024 and Affinity Designer 1.10.5.

Acknowledgments

We thank all current and previous members of the Wittbrodt and Birney labs for their critical, constructive feedback on the procedure and the manuscript. We thank I. Brettell for his great initial input in setting up the pipeline for fish tracking, image processing and analysis. We thank J. S. Chan for writing the *Fish Stripes* software. We thank N. Grammling for helping equipping the setup and are thankful to M. Majewski, E. Leist, S. Erny and A. Saraceno for excellent fish husbandry.

References

1. Wittbrodt J, Shima A, Schartl M. Medaka--a model organism from the far East. Nat Rev Genet. 2002 Jan;3(1):53–64.

2. Kasahara M, Naruse K, Sasaki S, Nakatani Y, Qu W, Ahsan B, et al. The medaka draft genome and insights into vertebrate genome evolution. Nature. 2007 Jun 7;447(7145):714–9.

3. Rembold M, Lahiri K, Foulkes NS, Wittbrodt J. Transgenesis in fish: efficient selection of transgenic fish by co-injection with a fluorescent reporter construct. Nat Protoc. 2006;1(3):1133–9.

400 4. Cornean A, Gierten J, Welz B, Mateo JL, Thumberger T, Wittbrodt J. Precise in vivo
401 functional analysis of DNA variants with base editing using ACEofBASEs target
402 prediction. Elife. 2022 Apr 4;11. doi: 10.7554/eLife.72124

403 5. Gücüm S, Sakson R, Hoffmann M, Grote V, Becker C, Pakari K, et al. A patient-based
404 medaka alg2 mutant as a model for hypo-N-glycosylation. Development. 2021 Jun
405 1;148(11). doi: 10.1242/dev.199385

406 6. Naruse K, Hori H, Shimizu N, Kohara Y, Takeda H. Medaka genomics: a bridge between
407 mutant phenotype and gene function. Mech Dev. 2004 Jul;121(7-8):619–28.

408 7. Spivakov M, Auer TO, Peravali R, Dunham I, Dolle D, Fujiyama A, et al. Genomic and
409 phenotypic characterization of a wild medaka population: towards the establishment of
410 an isogenic population genetic resource in fish. G3 . 2014 Mar 20;4(3):433–45.

411 8. Fitzgerald T, Brettell I, Leger A, Wolf N, Kusminski N, Monahan J, et al. The Medaka
412 Inbred Kiyosu-Karlsruhe (MIKK) panel. Genome Biol. 2022 Feb 21;23(1):59.

413 9. Leger A, Brettell I, Monahan J, Barton C, Wolf N, Kusminski N, et al. Genomic variations
414 and epigenomic landscape of the Medaka Inbred Kiyosu-Karlsruhe (MIKK) panel.
415 Genome Biol. 2022 Feb 21;23(1):58.

416 10. Gierten J, Welz B, Fitzgerald T, Thumberger T, Hummel O, Leger A, et al. Natural
417 genetic variation quantitatively regulates heart rate and dimension. bioRxiv [Preprint].
418 2023 Nov 2; Available from: http://dx.doi.org/10.1101/2023.09.01.555906

419 11. Centanin L, Wittbrodt J. Retinal neurogenesis. Development. 2014 Jan;141(2):241–4.

420 12. Centanin L, Ander JJ, Hoeckendorf B, Lust K, Kellner T, Kraemer I, et al. Exclusive
421 multipotency and preferential asymmetric divisions in post-embryonic neural stem cells
422 of the fish retina. Development. 2014 Sep 15;141(18):3472–82.

13. Shi D, Tavhelidse T, Thumberger T, Wittbrodt J, Greb T. Bifacial stem cell niches in fish and plants. Curr Opin Genet Dev. 2017 Aug;45:28–33.

14. Neuhauss SCF. Behavioral genetic approaches to visual system development and function in zebrafish. J Neurobiol. 2003 Jan;54(1):148–60.

15. Orger MB, Gahtan E, Muto A, Page-McCaw P, Smear MC, Baier H. Behavioral screening assays in zebrafish. Methods Cell Biol. 2004;77:53–68.

16. Clark DT. Visual responses in developing zebrafish (Brachydanio rerio). University of Oregon [Ph.D thesis]. 1981; Available from: https://www.proquest.com/openview/d13db69af0185e2e2eb48ea843fd44a8/1?cbl=18750&diss=y&parentSessionId=USUhCip6IAQ83AUROqINd9cu0VAZyBVxVAKPKmDbTqk%3D&pq-origsite=gscholar&parentSessionId=8dDZHST%2BDflN1q20bRHGpVcB7iCe3F2g9IN1VGUJuPM%3D

17. Brockerhoff SE, Hurley JB, Janssen-Bienhold U, Neuhauss SC, Driever W, Dowling JE. A behavioral screen for isolating zebrafish mutants with visual system defects. Proc Natl Acad Sci U S A. 1995 Nov 7;92(23):10545–9.

18. Easter SS Jr, Nicola GN. The development of vision in the zebrafish (Danio rerio). Dev Biol. 1996 Dec 15;180(2):646–63.

19. Beck JC, Gilland E, Tank DW, Baker R. Quantifying the ontogeny of optokinetic and vestibuloocular behaviors in zebrafish, medaka, and goldfish. J Neurophysiol. 2004 Dec;92(6):3546–61.

20. Muto A, Orger MB, Wehman AM, Smear MC, Kay JN, Page-McCaw PS, et al. Forward Genetic Analysis of Visual Behavior in Zebrafish. PLoS Genet. 2005;1(5):e66.

21. Mueller KP, Schnaedelbach ODR, Russig HD, Neuhauss SCF. VisioTracker, an innovative automated approach to oculomotor analysis. J Vis Exp. 2011 Oct 12;(56). doi: 10.3791/3556

22. Bilotta J. Effects of abnormal lighting on the development of zebrafish visual behavior. Behav Brain Res. 2000 Nov 15;116(1):81–7.

23. Carvalho PSM, Noltie DB, Tillitt DE. Ontogenetic improvement of visual function in the medaka Oryzias latipes based on an optomotor testing system for larval and adult fish. Anim Behav. 2002 Jul 1;64(1):1–10.

24. Furukawa R, Ijiri K. Swimming behavior of larval Medaka fish under microgravity. Adv Space Res. 2002;30(4):733–8.

25. Matsuo M, Ando Y, Kamei Y, Fukamachi S. A semi-automatic and quantitative method to evaluate behavioral photosensitivity in animals based on the optomotor response (OMR). Biol Open 2018 Jun 19;7(6). doi: 10.1242/bio.033175

26. Xie J, Goodbourn P, Sztal T, Jusuf PR. Neural Endophenotype Assessment in Zebrafish Larvae Using Optomotor and ZebraBox Locomotion Assessment. Methods Mol Biol. 2024;2746:213–24.

27. Leinonen H, Pham NC, Boyd T, Santoso J, Palczewski K, Vinberg F. Homeostatic plasticity in the retina is associated with maintenance of night vision during retinal degenerative disease. Elife. 2020 Sep 22;9. doi: 10.7554/eLife.59422

28. Roeser T, Baier H. Visuomotor behaviors in larval zebrafish after GFP-guided laser ablation of the optic tectum. J Neurosci. 2003 May 1;23(9):3726–34.

29. Imada H, Hoki M, Suehiro Y, Okuyama T, Kurabayashi D, Shimada A, et al. Coordinated and cohesive movement of two small conspecific fish induced by eliciting a simultaneous

469 optomotor response. PLoS One. 2010 Jun 22;5(6):e11248.

470 30. Neuhauss SC, Biehlmaier O, Seeliger MW, Das T, Kohler K, Harris WA, et al. Genetic
471 disorders of vision revealed by a behavioral screen of 400 essential loci in zebrafish. J
472 Neurosci. 1999 Oct 1;19(19):8603–15.

473 31. Watanabe A, Myosho T, Ishibashi A, Yamamoto J, Toda M, Onishi Y, et al.
474 Levonorgestrel causes feminization and dose-dependent masculinization in medaka fish
475 (Oryzias latipes): Endocrine-disruption activity and its correlation with sex reversal. Sci
476 Total Environ. 2023 Jun 10;876:162740.

477 32. Vlasiuk A, Asari H. Feedback from retinal ganglion cells to the inner retina. PLoS One.
478 2021 Jul 22;16(7):e0254611.

479 33. Yedutenko M, Howlett MHC, Kamermans M. High Contrast Allows the Retina to
480 Compute More Than Just Contrast. Front Cell Neurosci. 2020;14:595193.

481 34. Gollisch T, Meister M. Eye smarter than scientists believed: neural computations in
482 circuits of the retina. Neuron. 2010 Jan 28;65(2):150–64.

483 35. Poort J, Wilmes KA, Blot A, Chadwick A, Sahani M, Clopath C, et al. Learning and
484 attention increase visual response selectivity through distinct mechanisms. Neuron.
485 2022 Feb 16;110(4):686–97.e6.

486 36. Parker MO, Gaviria J, Haigh A, Millington ME, Brown VJ, Combe FJ, et al.
487 Discrimination reversal and attentional sets in zebrafish (Danio rerio). Behav Brain Res.
488 2012 Jun 15;232(1):264–8.

489 37. Bert B, Chmielewska J, Bergmann S, Busch M, Driever W, Finger-Baier K, et al.
490 Considerations for a European animal welfare standard to evaluate adverse phenotypes
491 in teleost fish. EMBO J. 2016 Jun 1;35(11):1151–4.

38. Koster R, Stick R, Loosli F, Wittbrodt J. Medaka spalt acts as a target gene of hedgehog signaling. Development. 1997 Aug;124(16):3147–56.

39. Iwamatsu T. Stages of normal development in the medaka Oryzias latipes. Mech Dev. 2004 Jul;121(7-8):605–18.

40. Schindelin J, Arganda-Carreras I, Frise E, Kaynig V, Longair M, Pietzsch T, et al. Fiji: an open-source platform for biological-image analysis. Nat Methods. 2012 Jun 28;9(7):676–82.

41. Wickham H. Data Analysis. In: Wickham H, editor. ggplot2: Elegant Graphics for Data Analysis. Cham: Springer International Publishing; 2016. p. 189–201.

42. Team R. RStudio: Integrated Development Environment for R. In Team R; 2020.PBC, Boston, MA Available from: http://www.rstudio.com/.

Supporting information

S1 Fig. Technical drawing of the linear-pool-style optomotor response (OMR) setup.

S2 Fig. Technical drawing of the linear-pool-arena.

S3 Fig. Image processing and analysis scheme. (A) Tiff stack was processed using Fiji as follows. First slice of the stack was duplicated and subtracted from each slice of the stack to subtract the background. Subsequently, noise reduction using median filter and inversion were performed. Lastly, Depth color code plugin and Z projection were used to visualize larval swimming trajectories. (B) For image analysis, the first slice of

514 the stack was used to count the total number of larvae that were valid for response
515 rate calculation. Those larvae located more than 27 mm from the lane end
516 (corresponding to 20% of the lane length) were counted as “valid” (yellow circles) and
517 the sum was used as total number. Those larvae located close to the lane end were
518 considered as not valid (red circles). Z projection image was used to count the number
519 of responders. Those larvae swimming in the direction of stripe motion for at least 20%
520 of the lane length were considered as "responders" (green circles). Arrow indicates
521 direction of stripe movement.

522 **S4 Fig. Trainability of OMR in Cab and HdrR strain medaka.** (A-D) Percentages of
523 Cab strain larvae that responded to the moving stripes of four different stripe widths
524 (1.4, 1.2, 1.0 and 0.8 mm) to the right (white) or the left (gray) direction without (A, B)
525 or with (C, D) prior exposure to thick stripe (8 mm) motion in first (A, C) and second (B,
526 D) replicates. Percentages of HdrR strain larvae that responded to the moving stripes
527 of four different stripe widths (1.4, 1.2, 1.0 and 0.8 mm) to the right (white) or the left
528 (gray) direction without (E, F) or with (G, H) prior exposure to thick stripe (8 mm) motion
529 in first (E, G) and second (F, H) replicates. Number above each column represents the
530 response rate (%), number of valid larvae in parentheses.

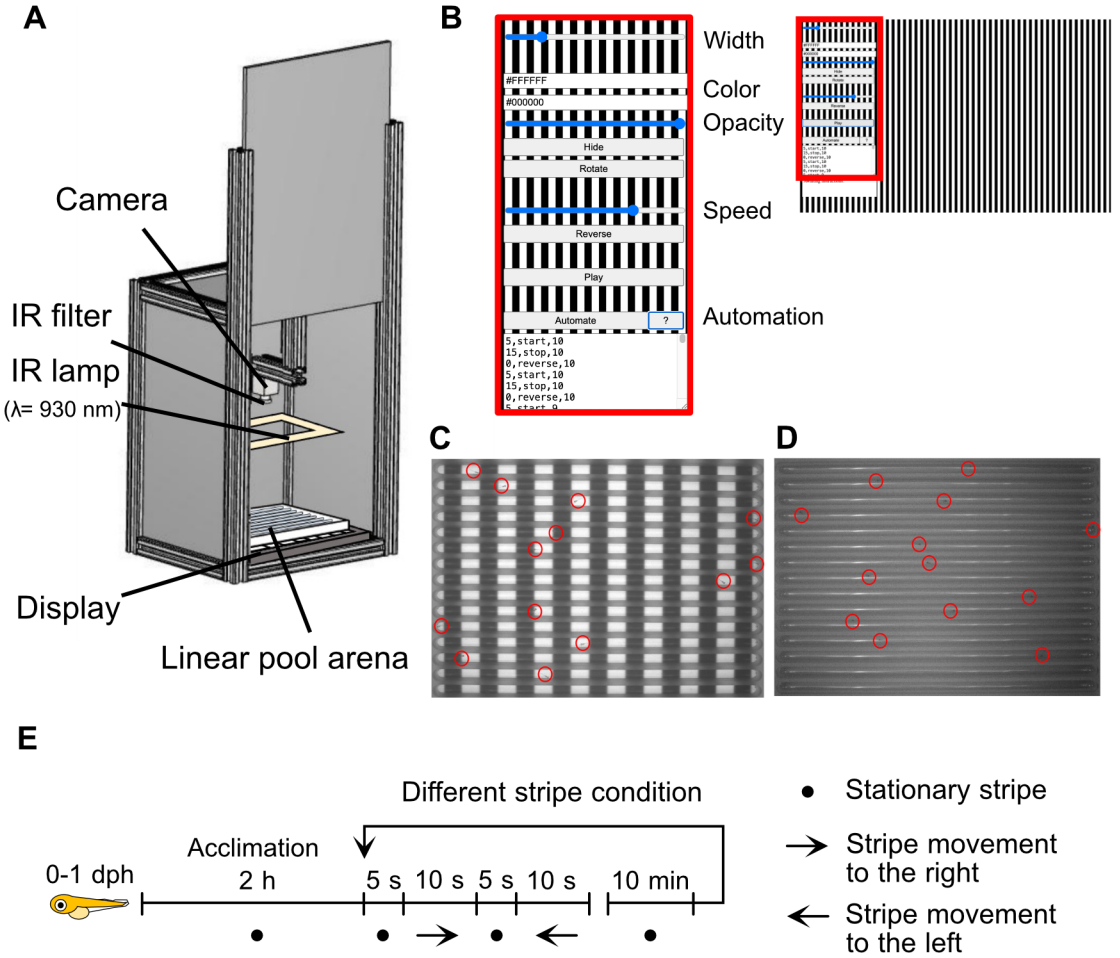
A
Camera
IR filter
IR lamp
(λ= 930 nm)
Display
Linear pool arena
B
#FFFFFF
#000000
Hide
Rotate
Reverse
Play
Automate
?
5,start,10
15,stop,10
0,reverse,10
5,start,10
15,stop,10
0,reverse,10
Width
Color
Opacity
Speed
Automation
C
D
E
Different stripe condition
0-1 dph
Acclimation
2 h
5 s
10 s
5 s
10 s
10 min
Stationary stripe
Stripe movement
to the right
Stripe movement
to the left

Figure 1

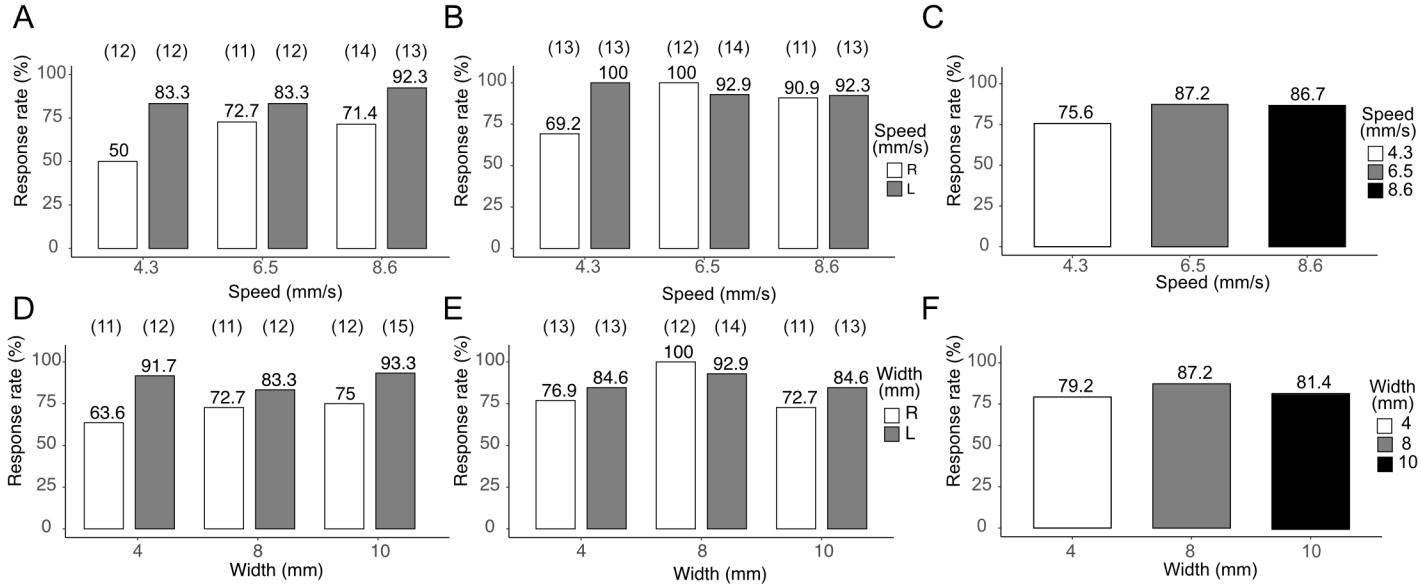
A
(12) (12) (11) (12) (14) (13)
Response rate (%)
100
75
50
25
0
50
83.3
72.7
83.3
71.4
92.3
4.3
6.5
8.6
Speed (mm/s)
B
(13) (13) (12) (14) (11) (13)
69.2
100
100
92.9
90.9
92.3
Speed (mm/s)
R
L
C
75.6
87.2
86.7
Speed (mm/s)
4.3
6.5
8.6
D
(11) (12) (11) (12) (12) (15)
63.6
91.7
72.7
83.3
75
93.3
4
8
10
Width (mm)
E
(13) (13) (12) (14) (11) (13)
76.9
84.6
100
92.9
72.7
84.6
Width (mm)
R
L
F
79.2
87.2
81.4
Width (mm)
4
8
10

Figure 2

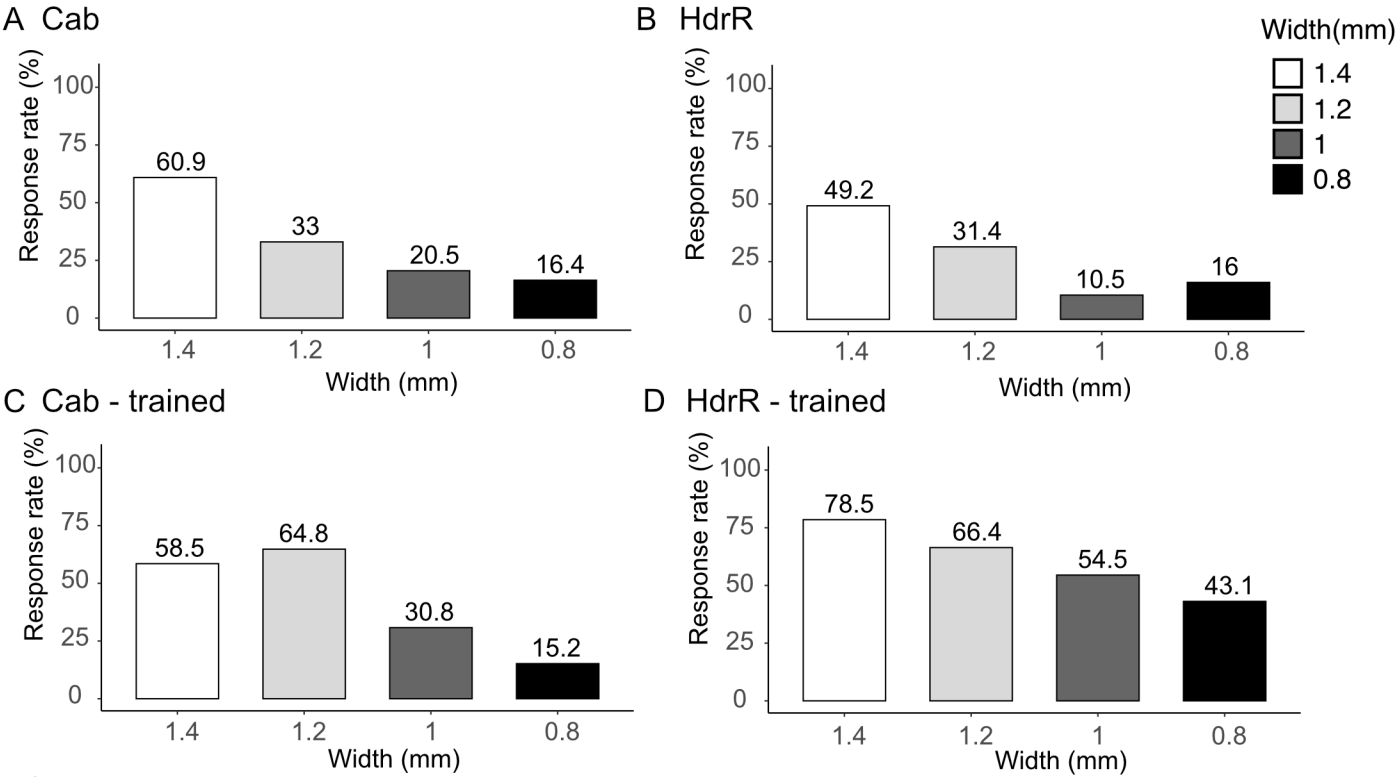
A Cab
B HdrR
C Cab - trained
D HdrR - trained
Response rate (%)
Width (mm)
Width(mm)
1.4
1.2
1
0.8
60.9
33
20.5
16.4
49.2
31.4
10.5
16
58.5
64.8
30.8
15.2
78.5
66.4
54.5
43.1
0
25
50
75
100

Figure 3

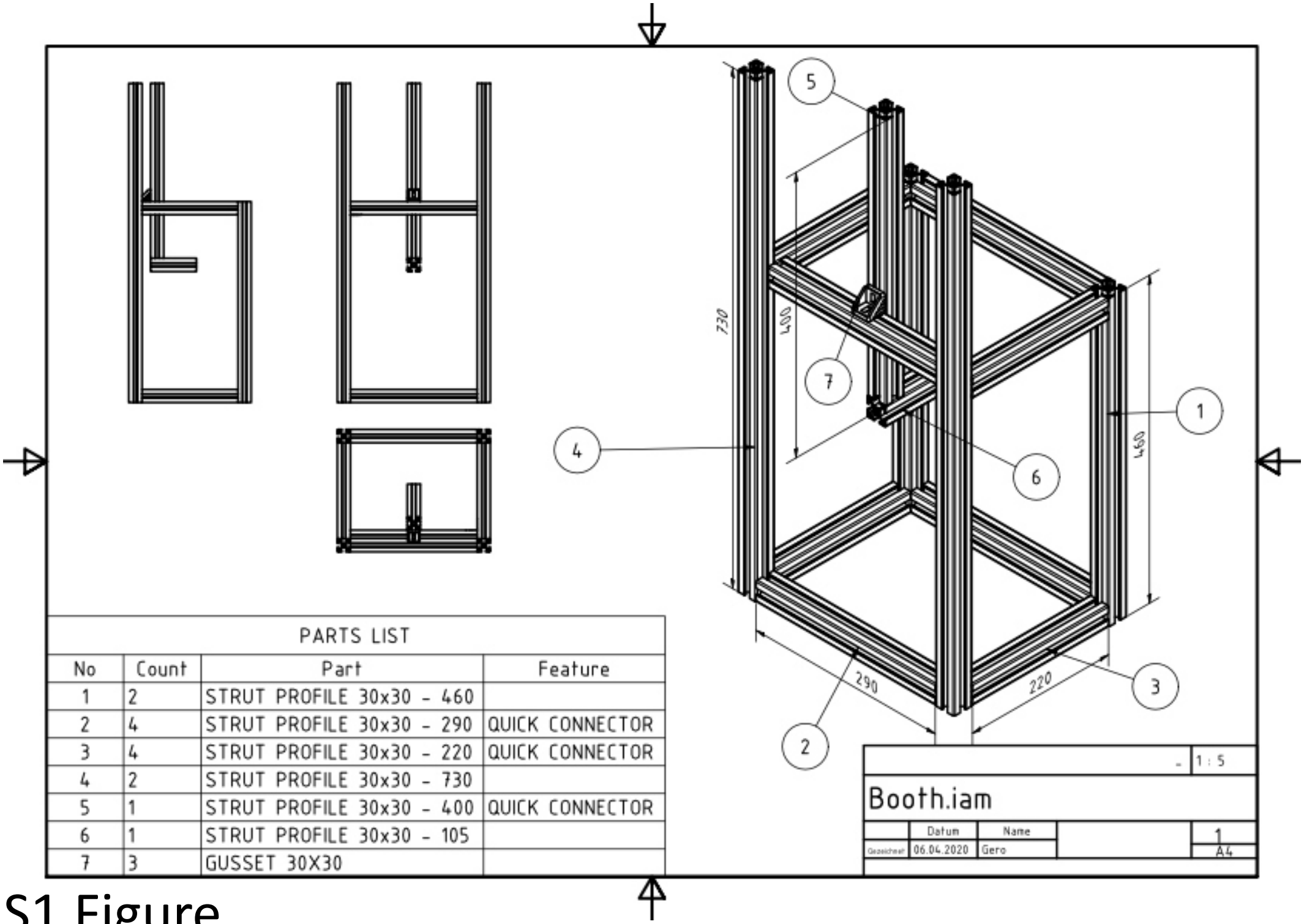

PARTS LIST

No	Count	Part	Feature
1	2	STRUT PROFILE 30x30 - 460	
2	4	STRUT PROFILE 30x30 - 290	QUICK CONNECTOR
3	4	STRUT PROFILE 30x30 - 220	QUICK CONNECTOR
4	2	STRUT PROFILE 30x30 - 730	
5	1	STRUT PROFILE 30x30 - 400	QUICK CONNECTOR
6	1	STRUT PROFILE 30x30 - 105	
7	3	GUSSET 30X30	

S1 Figure

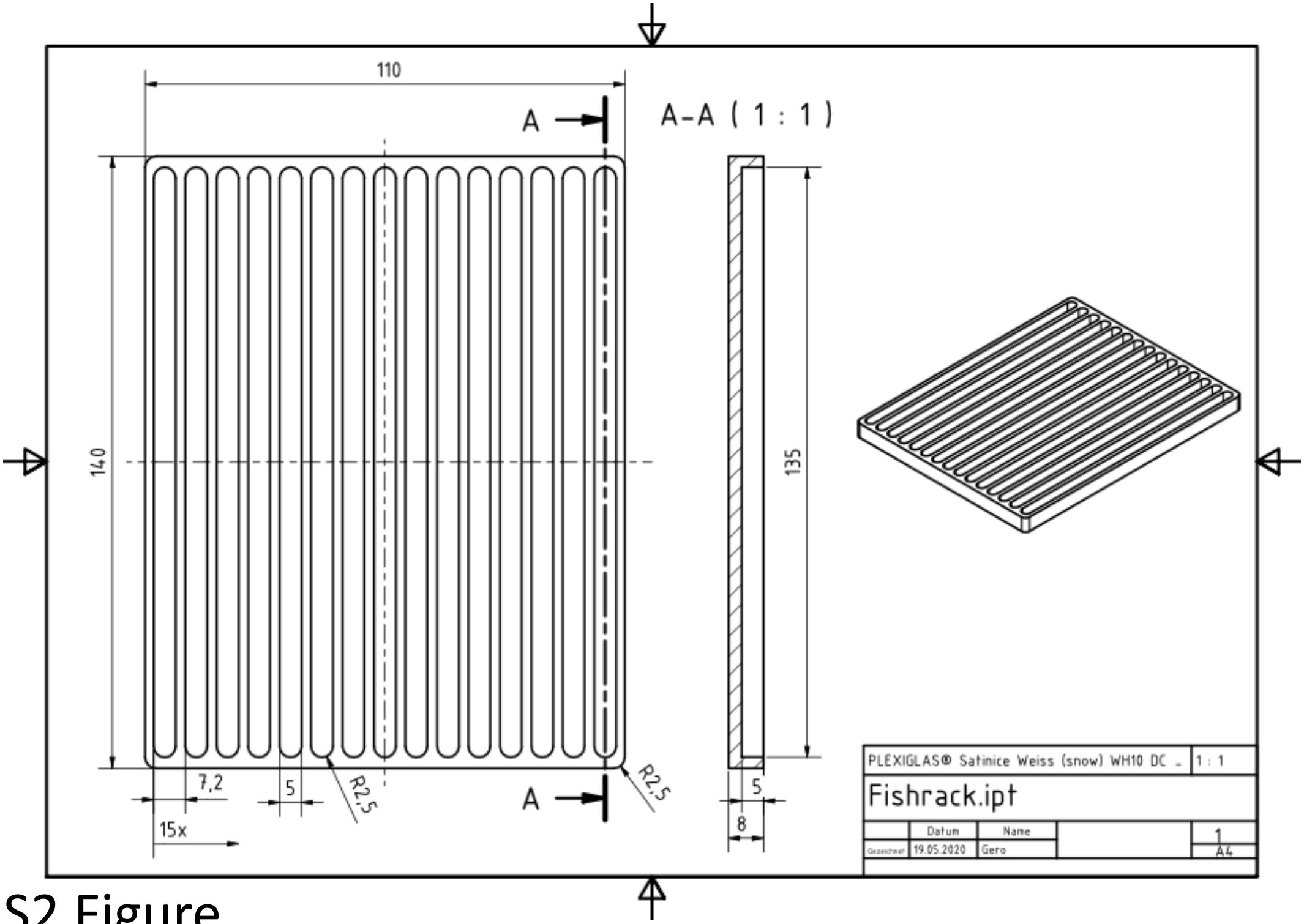
110
A
A-A (1 : 1)
140
135
7,2
5
R2,5
15x
A
R2,5
5
8
PLEXIGLAS® Satinice Weiss (snow) WH10 DC
1 : 1
Fishrack.ipt
Datum
Name
Gezeichnet
19.05.2020
Gero
1
A4

S2 Figure

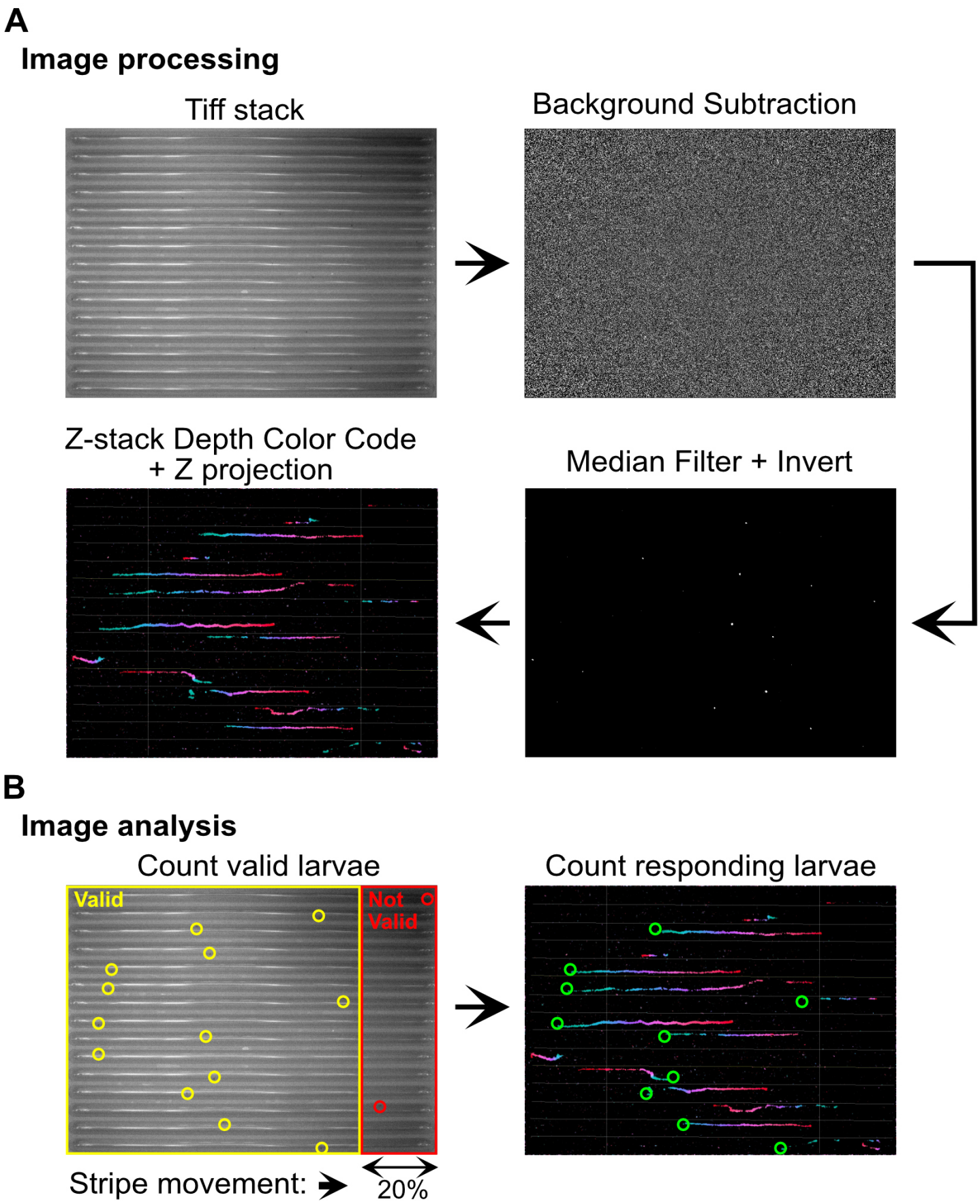
A
Image processing
Tiff stack
Background Subtraction
Z-stack Depth Color Code
+ Z projection
Median Filter + Invert
B
Image analysis
Count valid larvae
Count responding larvae
Valid
Not
Valid
Stripe movement:
20%

S3 Figure

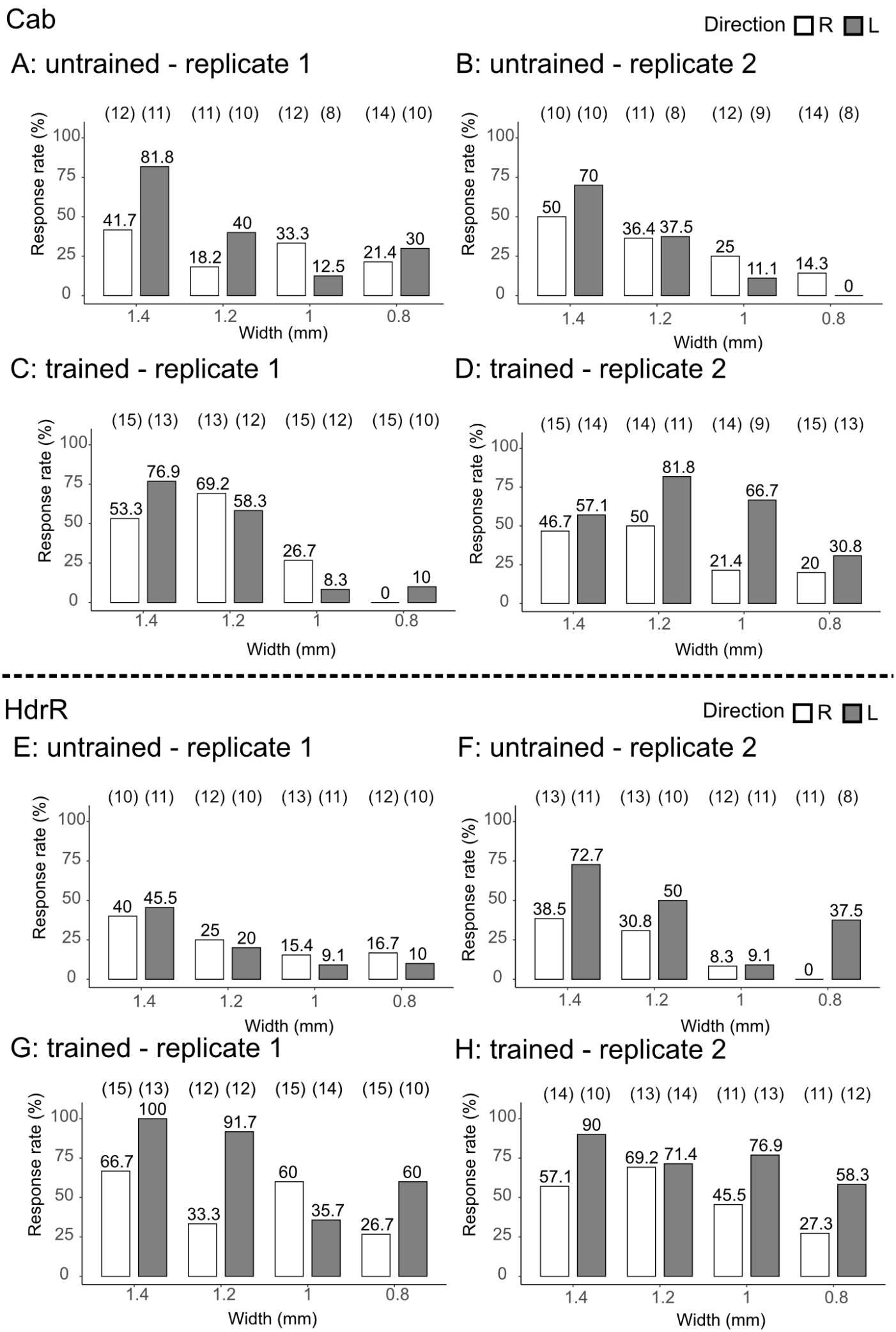
Cab
Direction R L
A: untrained - replicate 1
(12) (11) (11) (10) (12) (8) (14) (10)
41.7 81.8 18.2 40 33.3 12.5 21.4 30
B: untrained - replicate 2
(10) (10) (11) (8) (12) (9) (14) (8)
50 70 36.4 37.5 25 11.1 14.3 0
C: trained - replicate 1
(15) (13) (13) (12) (15) (12) (15) (10)
53.3 76.9 69.2 58.3 26.7 8.3 0 10
D: trained - replicate 2
(15) (14) (14) (11) (14) (9) (15) (13)
46.7 57.1 50 81.8 21.4 66.7 20 30.8
Response rate (%)
Width (mm)
HdrR
Direction R L
E: untrained - replicate 1
(10) (11) (12) (10) (13) (11) (12) (10)
40 45.5 25 20 15.4 9.1 16.7 10
F: untrained - replicate 2
(13) (11) (13) (10) (12) (11) (11) (8)
38.5 72.7 30.8 50 8.3 9.1 0 37.5
G: trained - replicate 1
(15) (13) (12) (12) (15) (14) (15) (10)
66.7 100 33.3 91.7 60 35.7 26.7 60
H: trained - replicate 2
(14) (10) (13) (14) (11) (13) (11) (12)
57.1 90 69.2 71.4 45.5 76.9 27.3 58.3

S4 Figure