A PREPRINT

Quantitative Genetics of Microbiome Mediated Traits

Bob Week[1,2,3] **Peter L. Ralph**[1] **Hannah F. Tavalire**[1,4] **William A. Cresko**[1,5*] **Brendan J. M. Bohannan**[1*]

[1]Institute of Ecology and Evolution, University of Oregon, Eugene, Oregon

[2]Zoological Institute, Kiel University, Kiel, Germany

[3]Max-Planck Institute for Evolutionary Biology, Plön, Germany

[4]Veterans Affairs Cooperative Studies Program Coordinating Center, New Haven, Connecticut

[5]Knight Campus for Accelerating Scientific Impact, University of Oregon, Eugene, Oregon

Correspondence
Bob Week
Email: bweek.ecoevo@proton.me

Funding information
BW and BJMB are supported by grant no.10001 from the Gordon and Betty Moore Foundation. BW is further funded through KiTE (i.e., Kiel Training for Excellence) which is part of the European Union's Horizon Europe research and innovation programme under the Marie Sklodowska-Curie grant agreement number No 101081480. BJMB and HFT are grateful for the support of the National Institutes of Health (NIH, grant P01GM125576). HFT is also thankful for support from NIH grant UH3 OD023389. PLR is supported by NIH grants HG01273 and HG010774 from the National Institute of General Medical Sciences. WAC is supported by National Science Foundation grant OPP-2015301.

Multicellular organisms host a rich assemblage of associated microorganisms, collectively known as their "microbiomes". Microbiomes have the capacity to influence their hosts' fitnesses, but the conditions under which such influences contribute to evolution are not clear. This is due in part to a lack of a comprehensive theoretical framework for describing the combined effects of host and associated microbes on phenotypic variation. Here we begin to address this gap by extending the foundations of quantitative genetic theory to include host-associated microbes, as well as alleles of hosts, as factors that explain quantitative host trait variation. We introduce a way to partition host-associated microbiomes into componenents relevant for predicting a microbiome-mediated response to selection. We then apply our general framework to a simulation model of microbiome inheritance to illustrate principles for predicting host trait dynamics, and to generalize classical narrow and broad sense heritabilities to account for microbial effects. We demonstrate that microbiome-mediated responses to host selection can arise from various transmission modes, not solely vertical, with the contribution of non-vertical modes depending on host life history. Our work lays a foundation for integrating microbiome-mediated host variation and adaptation into our understanding of natural variation.

KEYWORDS

Host-Microbiome, Heritability, Genetics, Transmission, Genomics

*BJMB and WAC are co-equal senior authors.

1 | INTRODUCTION

Nearly every lineage of multicellular organisms has a complex assemblage of associated microorganisms. This "microbiome" can contribute important physiological and developmental functions to their hosts (Spor et al., 2011; Burns et al., 2017; Goodrich et al., 2016; McFall-Ngai, 2007). Although recent work has greatly expanded our understanding of the dynamics and function of host-associated microbiomes (Bruijning et al., 2021; Theis, 2018; Rosenberg and Zilber-Rosenberg, 2018; Roughgarden, 2023; Sandoval-Motta et al., 2017), it is still unclear the extent to which microbiomes contribute to host fitness and evolution, and how such contributions depend on the mode of microbial transmission (Wendling and Wegner, 2015; Zilber-Rosenberg and Rosenberg, 2008; Russell, 2019). This knowledge gap is due in part to the lack of a comprehensive theoretical framework for modeling how host-microbiome system-level traits emerge from the interactions of host genes, microbiome and environment (Theis, 2018; Martiny et al., 2015; van Vliet and Doebeli, 2019; Roughgarden et al., 2017; Zilber-Rosenberg and Rosenberg, 2008).

Recently there have been calls to develop such a theoretical framework by incorporating microbiomes into quantitative genetics (Mueller and Linksvayer, 2022; Awany and Chimusa, 2020; Benson et al., 2010; Wang et al., 2018), which comprises a rich mathematical theory that models the inheritance and evolution of complex traits (Lynch et al., 1998; Mackay et al., 2009; Rice, 2004; Walsh and Lynch, 2018). While microbiomes have sometimes been considered to be traits influenced by host genetics (Camarinha-Silva et al., 2017; Knights et al., 2014; Opstal and Bordenstein, 2015), microbes have only recently been considered as inherited contributors themselves to the variation of emergent host-microbiome complex phenotypes (Org et al., 2015; Sandoval-Motta et al., 2017). Microbiomes are especially challenging to incorporate into quantitative genetics as sources of heritable trait variation because microbiome inheritance is not Mendelian, and microbes need not be vertically transmitted (Bruijning et al., 2021; Uller and Helanterä, 2013; Roughgarden, 2023; van Vliet and Doebeli, 2019). Theoretical investigations into how different modes of microbial transmission influence the evolution of host and microbial joint phenotypes are needed to clarify the degree to which these processes can affect long-term evolutionary trajectories.

Here we formally generalize the foundations of quantitative genetic theory to include host-associated microbes as trait mediating factors in addition to host genes. We begin in section 2 by reviewing the general approach to analysis of phenotypic variance introduced by Fisher (1918). Following this, we describe some initial assumptions for incorporating microbiome mediated variation in section 3. In section 4 we introduce an approach to expand the analysis of phenotypic variance to include microbial factors. Our approach is general and makes no assumptions about correlations or interactions between host genes and microbes. To illustrate the generalized framework, we then apply it to briefly analyze a model of gene-microbe interactions in section 5. In section 6 we turn our attention to microbiome mediated responses to host selection and suggest a relevant partitioning of microbiomes into three components. We also describe useful simplifying assumptions for acquiring initial insights. To test predictions about microbiome mediated responses to selection, we introduce a simple simulation model. Building on our results, we propose definitions for narrow and broad sense microbial heritabilities, and notions of transmissibilities that generalize genetic heritabilities to include any selective factors. We finish by connecting results from our simulation model to consequences for genome-wide and microbiome-wide association studies.

2 | QUANTITATIVE GENETIC FOUNDATIONAL PRINCIPLES

Quantitative genetics developed in the late 19th century through the development of statistical models to describe how continuous phenotypic variation depended on heritable and environmental components and to predict the phenotypic response to selection (Walsh and Lynch, 2018). Even after the rediscovery of Mendel's laws in 1904, debate continued as to how continuous variation could emerge from discrete genes (Provine, 2001). R.A. Fisher settled the issue in a foundational 1918 paper (Fisher, 1918) showing that distributions of continuous phenotypes arise when alleles at multiple loci, potentially interacting with each other and the environment, are considered. Following this, Fisher then introduced the concepts of *average excess* and *average effect* of allele substitutions in order to associate an additive quantity with each allele that best predicts the response to selection (Bürger, 2000; Fisher, 1941). Because these concepts are at the core of theoretical quantitative genetics, and because we will be generalizing them later to account for microbiome mediated effects, we summarize the basic principles here.

For a given host genotype g, write z_g as the host trait associated with g averaged over all other trait mediating factors (including environmental factors and host microbiome composition). The quantity z_g is referred to as a *genotypic value*. Then, writing p_g for the frequency at which host genotype g occurs in the population, we have that $\bar{z} = \sum_g p_g z_g$ is the average of z_g over all host genotypes (equivalent to the population mean trait since all other factors have already been averaged over), and the quantity $\delta_g = z_g - \bar{z}$ is the *average excess* associated with host genotype g. Fisher decomposed the average excess into an additive effect α_g (defined to be the sum of additive effects associated with each allele in host genotype g) and a residual deviation ρ_g such that $\delta_g = \alpha_g + \rho_g$.

Using this partitioning scheme the total host phenotypic variation P can be decomposed as $P = G + E$, where $G = \sum_g p_g(z_g - \bar{z})^2$ is the variance of genotypic values across the population (called the *genetic variance*). Although E is often referred to as the *environmental variance*, it is more precisely defined as $E = P - G$, the remaining variance left unexplained by genotypic values. Additionally, the *additive genetic variance* G_A can be defined as the variance of additive genetic effects across host genotypes, $G_A = \sum_g p_g(\alpha_g - \bar{\alpha})^2$, where $\bar{\alpha} = \sum_g p_g \alpha_g$. Then, to complete the definition, additive genetic effects are defined to be the values that maximize G_A. Equivalently, the additive genetic effects can be found by minimizing the residual genetic variance $G_R = \sum_g p_g(\rho_g - \bar{\rho})^2$, with $\bar{\rho} = \sum_g p_g \rho_g$.

The least-squares problem described above has a unique solution (so long as no pair of loci are in perfect linkage disequilibrium, but then one locus can be excluded because it perfectly predicts the other), and therefore provides a formal definition for the additive genetic effects. Furthermore, under this definition the genetic variance decomposes as $G = G_A + G_R$ (Bürger, 2000). Although Fisher's (1918) paper assumed Hardy-Weinberg equilibrium, which allowed derivation of more specific results, the overall approach only depends on the identification of the genotypic values z_g.

This definition of G_A turns out to be useful for accurately predicting the response of a trait to selection. For instance, G_A is more useful than G in predicting the response to selection because parents transmit alleles, not entire genotypes. In particular, the classical *breeders equation* takes the form $\Delta\bar{z} = G_A\beta$, where $\Delta\bar{z} = \bar{z}' - \bar{z}$ is the difference between offspring mean trait $\bar{z}'$ and parent mean trait $\bar{z}$, and $\beta = \mathrm{Cov}(W, z)/P$ is the correlation coefficient of fitness (W) with phenotype (Lande, 1976).

These definitions are also used to define *heritability* of a trait as a measure of parent-offspring resemblance. In particular, the quantities $h^2 = G_A/P$ and $H^2 = G/P$ are referred to as the *narrow* and *broad* sense heritabilities,

respectively (reviewed by Visscher et al., 2008). With this notation, we note that the breeders equation was initially introduced by Lush (1937) in the form $R = h^2 S$, where $R = \Delta\bar{z}$ is the response to selection and S is the selection differential (see Walsh and Lynch, 2018). Key notation used throughout our paper is summarized in Table 1.

In what follows we build on these foundations to incorporate the effects of host-associated microbiomes. By generalizing the above approach, we naturally arrive at a generalization of additive genetic variance, the breeders equation, and narrow-sense and broad-sense heritabilities for microbiome mediated traits. Before we introduce our framework, we discuss some initial assumptions for incorporating microbiomes in the following section.

3 | INITIAL ASSUMPTIONS FOR INCORPORATING MICROBES

By building on quantitative genetics theory we are admittedly using a very host-centric framework that leads to several constraining assumptions. In particular, we focus on a single trait that is an emergent property of the host-microbe system, such as the ability of the host to acquire energy from food that first must be processed by components of the host gut microbiome. For example, termites and their associated gut microbiomes together can process high amounts of cellulose to acquire energy (Maurice and Erdei, 2018; Ali et al., 2019; Arora et al., 2022).

We also assume contributions from both host genes and microbe individuals to this trait comprise heritable or potentially heritable units, meaning that they can be transmitted from a donor to a recipient, and influence the value of the emergent phenotype. Traditional quantitative genetics defines the donor and recipients solely as parents and offspring through the transmission of alleles. In sexually reproducing diploid populations, the process of gametogenesis and syngamy leads to Mendelian segregation.

In contrast, microbes can be transmitted among hosts in a variety of ways. In particular, a microbial parent (donor) and microbial offspring (recipient) may not be genetically related. Additionally, unlike the transmission of alleles via sexual reproduction, microbial recipients can have more than two donors, depending on the microbial taxa considered and mode of transmission. In some cases the donor and receiver of transmitted host genetic and microbial units will be the same, which has been described as *lineal transmission* (Roughgarden, 2023) and *co-propagation* (Mueller and Linksvayer, 2022).

We must also take into account that microbiome composition is governed by community assembly and not Mendelian processes, and microbial abundances can vary dynamically throughout the life of the host. These have been termed the *fidelity of transmission* and *persistence fidelity* of microbes (Mueller and Linksvayer, 2022), with the idea that microbe persistence is often less than that of an allele. For the sake of clarity, we do not consider microbiome dynamics throughout host development in our discussion, and instead focus on the transmission of microbes between donor and recipient. However, our approach is sufficiently general to accomodate such additional complexities. In particular, within host microbiome dynamics will likely alter measurements of microbiome mediated host trait heritability.

Several authors have recently attempted to extend heritability to include microbial contributions, and have proposed novel terminology such as *microbiability* and *holobiontability*. However, we prefer to follow the convention established earlier by Rothschild et al. (2018) and further clarified in Mueller and Linksvayer (2022) of using H^2 and h^2 for broad and narrow sense *genetic heritability*, and B^2 and b^2 for broad and narrow sense *microbial "heritability"*. As Mueller and Linksvayer (2022) make clear, microbial heritability refers to microbial contributions to the emergent host phenotype, not to be confused with the genetic heritability of microbiomes as host traits in and of themselves (Morris and Bohannan, 2024).

The use of the term heritability when referring to microbial contributions to a trait is a notable expansion of its original definition in the context of host genetics that has been questioned by previous authors. However, we feel in the context of phenotypic variance partitioning it is appropriate if clearly identified as genetic vs. microbial heritabilities, and explicitly defined as we attempt below. After all, the term "inheritance" refers to much more than genes (Zimmer, 2019).

4 | ANALYSIS OF VARIANCE OF MICROBIOME MEDIATED TRAITS

The partitioning of variance reviewed in section 2 is not restricted to genetic material, but can be applied to any collection of trait mediating factors. In particular, for a microbiome mediated host trait, relevant factors include the host genotype g and host microbiome m. For clarity, we consider diploid host populations with L biallelic loci. We denote by $g_i \in \{0, 1, 2\}$ the number of alleles at locus $i \in \{1, \dots, L\}$ (the choice of allele counted is arbitrary). Turning to the host microbiome, we assume microbiomes may be summarized by the abundances of S microbial taxa with m_j being the abundance of microbe taxon $j \in \{1, \dots, S\}$. Vectors of allele counts and microbial abundances are respectively written as $g = (g_1, \dots, g_L)^*$ and $m = (m_1, \dots, m_S)^*$, where * denotes matrix transposition.

We write z_{gm} as the expected trait value for hosts carrying the genotype-microbiome pair (g, m) averaged across all other trait mediating factors, and refer to z_{gm} as the *genotypic-microbic value* of (g, m). Additionally, we write $\bar{z}$ as the mean *genotypic-microbic value* across all hosts in the population so that $\bar{z} = \sum_{gm} p_{gm} z_{gm}$, where p_{gm} is the frequency of hosts carrying the genotype-microbiome pair (g, m) and the sum is taken over all possible combinations of (g, m). By definition, $\bar{z}$ is also the mean trait of the host population.

The *average excess* of the pair (g, m) is then $\delta_{gm} = z_{gm} - \bar{z}$, and we consider the decomposition $\delta_{gm} = \alpha_{gm} + \rho_{gm}$, where α_{gm} is an additive component that decomposes into additive genetic and additive microbial effects of the pair (g, m) on δ_{gm}, and ρ_{gm} is the residual deviation. In particular, following Fisher's general approach, we assume $\alpha_{gm} = \alpha_0 + \gamma_g + \omega_m$ where α_0 acts as an intercept for the statistical model, γ_g is the additive genetic effect and ω_m is the additive microbial effect on the average excess δ_{gm}.

Finally, using our assumptions for summarizing host genotype and host microbiome, the definition of additive effects imply that they can be written as

$$\gamma_g = \sum_{i=1}^{L} \gamma_i g_i, \quad \omega_m = \sum_{j=1}^{S} \omega_j m_j, \tag{1}$$

where γ_i is the per count additive allelic effect of locus $i \in \{1, \dots, L\}$ on δ_{gm} and ω_j is the per capita additive microbial effect of taxon $j \in \{1, \dots, S\}$ on δ_{gm}. To be clear, γ_g is distinguished from γ_i because g is a vector and i is an integer. A similar distinction holds for ω_m and ω_i.

Following the general scheme outlined in section 2, we can write the additive component of host trait variation explained by host genetic and host microbiome factors as

$$P_A = \sum_{gm} p_{gm} (\alpha_{gm} - \bar{\alpha})^2, \text{ where } \bar{\alpha} = \sum_{gm} p_{gm} \alpha_{gm}. \tag{2}$$

The expression for P_A reduces to the additive genetic variance G_A if the host microbiome is considered as an environmental factor to be averaged out. Setting $\bar{\gamma} = \sum_{gm} p_{gm}\gamma_g$ and $\bar{\omega} = \sum_{gm} p_{gm}\omega_m$, we have

$$(\alpha_{gm} - \bar{\alpha})^2 = (\gamma_g - \bar{\gamma})^2 + (\omega_m - \bar{\omega})^2 + 2(\gamma_g - \bar{\gamma})(\omega_m - \bar{\omega}) \tag{3}$$

so the combined additive genotypic-microbic variation P_A includes non-random associations between host genes and microbes thanks to the term $2(\gamma_g - \bar{\gamma})(\omega_m - \bar{\omega})$. This is a generalization of the result that the definition of additive genetic variance is independent of Hardy-Weinberg equilibrium, but also includes non-random associations between host genetic loci. Then, building on the classical definition of additive genetic variance, we write

$$G_A = \sum_{gm} p_{gm}(\gamma_g - \bar{\gamma})^2, \quad M_A = \sum_{gm} p_{gm}(\omega_m - \bar{\omega})^2, \quad C_A = 2\sum_{gm} p_{gm}(\gamma_g - \bar{\gamma})(\omega_m - \bar{\omega}), \tag{4}$$

where G_A is the additive genetic variance as before, M_A is the *additive microbial variance*, and C_A is the *additive gene-microbe covariance*. With this notation in place, we have $P_A = G_A + M_A + C_A$.

The definitions of additive genetic and additive microbial effects are formalized by solving the least squares problem of minimizing

$$P_R = \sum_{gm} p_{gm}(\rho_{gm} - \bar{\rho})^2 \tag{5}$$

with respect to $\alpha_0, \gamma_1, \dots, \gamma_L, \omega_1, \dots, \omega_S$, where $\rho_{gm} = \delta_{gm} - \alpha_{gm}$. In supplement section 1 we show that $\alpha_0 = -\bar{\gamma} - \bar{\omega}$. This implies that $\bar{\alpha} = 0$ and, because $\bar{\delta} = 0$, also that $\bar{\rho} = 0$. Additionally, setting $\mathrm{Cov}(z_{gm}, g)$ the vector with ith entry $\mathrm{Cov}(z_{gm}, g_i)$, $\mathrm{Cov}(z_{gm}, m)$ the vector with jth entry $\mathrm{Cov}(z_{gm}, m_j)$, Γ the matrix with ijth entry $\mathrm{Cov}(g_i, g_j)$, Ω the matrix with ijth entry $\mathrm{Cov}(m_i, m_j)$, and Ξ the matrix with ijth entry $\mathrm{Cov}(g_i, m_j)$, the least-squares problem reduces to solving the linear system

$$\mathrm{Cov}(z_{gm}, g) = \Gamma\,\vec{\gamma} + \Xi\,\vec{\omega}, \quad \mathrm{Cov}(z_{gm}, m) = \Xi^*\,\vec{\gamma} + \Omega\,\vec{\omega} \tag{6}$$

for $\vec{\gamma} = (\gamma_1, \dots, \gamma_L)^*$ and $\vec{\omega} = (\omega_1, \dots, \omega_S)^*$, where * denotes matrix transposition. The solution is then given by

$$\vec{\alpha} = \Sigma^{-1}\,\mathrm{Cov}(z_{gm}, a) \tag{7}$$

with $\vec{\alpha} = (\gamma_1, \dots, \gamma_L, \omega_1, \dots, \omega_S)^*$, $a = (g_1, \dots, g_L, m_1, \dots, m_S)^*$, $\mathrm{Cov}(z_{gm}, a)$ the vector with ith entry $\mathrm{Cov}(z_{gm}, a_i)$, and Σ the block matrix

$$\Sigma = \begin{bmatrix} \Gamma & \Xi \\ \Xi^* & \Omega \end{bmatrix}. \tag{8}$$

Similar to the case for additive genetic effects reviewed in section 2, this solution is unique so long as Σ is non-singular. This means that if the allele counts at any pair of loci, or if the abundances of any pair of microbes, or if an abundance of a microbe and an allele count of a locus perfectly correlate, the solution is no longer unique. Of course, in this case, factors can be pruned until none are perfectly correlated to setup a least-squares problem that has a unique solution.

TABLE 1 Summary of key notation

Symbol	Meaning		Symbol	Meaning
g	Host genotype		$\Delta\bar{z}$	Response to selection in host mean trait
m	Host microbiome		β	Selection gradient
z_{gm}	Genotypic-microbic value of (g, m)		h^2	Narrow-sense genetic heritability
δ_{gm}	Average excess of z_{gm}		b^2	Narrow-sense microbial heritability
γ_g	Additive effect of g on δ_{gm}		t^2	Narrow-sense transmissibility
γ_i	Additive effect of locus i on δ_{gm}		H^2	Broad-sense genetic heritability
ω_m	Additive effect of m on δ_{gm}		B^2	Broad-sense microbial heritability
ω_j	Additive effect of taxa j on δ_{gm}		T^2	Broad-sense transmissibility
G_A	Additive genetic variance		M_L	Lineal microbial variance
M_A	Additive microbial variance		M_N	Non-lineal microbial variance
C_A	Additive gene-microbe covariance		M_E	External microbial variance
M_A^ψ	Selective microbial variance		C_A^ψ	Selective gene-microbe covariance

Applying equation (1), the general expressions $\bar{\gamma} = \sum_{gm} p_{gm}\gamma_g$ and $\bar{\omega} = \sum_{gm} p_{gm}\omega_m$ simplify to $\bar{\gamma} = \sum_i \gamma_i\bar{g}_i$ and $\bar{\omega} = \sum_i \omega_i\bar{m}_i$ respectively, where $\bar{g}_i$ is the average number of alleles at locus i (which is twice the allele frequency due to host genotypes being diploid) and $\bar{m}_i$ is the average abundance of microbe taxon i. Using these locus/taxon-specific expressions of additive effects, and taking advantage of variances of sums being sums of (co)variances, expressions for the additive components of variance generalize classical calculations for additive genetic variance (e.g., equation (4) of Bulmer, 1971):

$$G_A = \sum_{i=1}^{L} \gamma_i^2 \operatorname{Var}(g_i) + 2\sum_{i=1}^{L}\sum_{j=1}^{i-1} \gamma_i\gamma_j \operatorname{Cov}(g_i, g_j), \tag{9a}$$

$$M_A = \sum_{i=1}^{S} \omega_i^2 \operatorname{Var}(m_i) + 2\sum_{i=1}^{S}\sum_{j=1}^{i-1} \omega_i\omega_j \operatorname{Cov}(m_i, m_j), \tag{9b}$$

$$C_A = 2\sum_{i=1}^{L}\sum_{j=1}^{S} \gamma_i\omega_j \operatorname{Cov}(g_i, m_j), \tag{9c}$$

where we use the convention $\sum_{j=1}^{0} x_j = 0$ for any summands $x_1, x_2, \ldots$.

This overall approach can be used to estimate the additive genetic and additive microbial effects $\gamma_1, \ldots, \gamma_L$ and $\omega_1, \ldots, \omega_S$ whenever the genotypic-microbic values z_{gm} are known for each host genotype-microbiome pair (g, m) present in the population. In particular, this holds for genotypic-microbic values occurring as arbitrary functions of genotype-microbiome pairs; $z_{gm} = f(g, m)$ for any function f. That is, this approach accounts for any kind of interaction among genes, among microbes, and between genes and microbes on the expression of host traits. To illustrate, we apply this approach to a model of genotypic-microbic values that includes interactions between genes and microbes in the following section.

5 | A MODEL OF GENE-MICROBE INTERACTIONS

The approach to analysis of variance above establishes a statistical model. We can then apply this model either to empirical or simulated data to gain biological insights. As a demonstration, we examine what the statistical model tells us when applied to a mechanistic model involving pairwise interactions between host loci and microbial taxa. Considering $z_{gm} = f(g, m)$ as a function of the genotype-microbiome pair (g, m), we analyze the model

$$z_{gm} = \mathring{z}_0 + \sum_{i=1}^{L} \mathring{\gamma}_i g_i + \sum_{j=1}^{S} \mathring{\omega}_j m_j + \sum_{i=1}^{L} \sum_{j=1}^{S} \mathring{\chi}_{ij} g_i m_j \tag{10}$$

where $\mathring{z}_0, \mathring{\gamma}_i, \mathring{\omega}_j, \mathring{\chi}_{ij}$ are model parameters, and $\mathring{\gamma}_i, \mathring{\omega}_j$ are not necessarily equivalent to the additive effects γ_i, ω_j as we now show.

Using the approach outlined in the previous section, the additive genetic and microbial effects from model (10) depends on $\mathrm{Cov}(z_{gm}, g_k)$ and $\mathrm{Cov}(z_{gm}, m_k)$, which are given by

$$\mathrm{Cov}(z_{gm}, g_k) = \sum_{i=1}^{L} \mathring{\gamma}_i \,\mathrm{Cov}(g_i, g_k) + \sum_{j=1}^{S} \mathring{\omega}_j \,\mathrm{Cov}(m_j, g_k) + \sum_{i=1}^{L} \sum_{j=1}^{S} \mathring{\chi}_{ij} \,\mathrm{Cov}(g_i m_j, g_k), \tag{11a}$$

$$\mathrm{Cov}(z_{gm}, m_k) = \sum_{i=1}^{L} \mathring{\gamma}_i \,\mathrm{Cov}(g_i, m_k) + \sum_{j=1}^{S} \mathring{\omega}_j \,\mathrm{Cov}(m_j, m_k) + \sum_{i=1}^{L} \sum_{j=1}^{S} \mathring{\chi}_{ij} \,\mathrm{Cov}(g_i m_j, m_k). \tag{11b}$$

Writing

$$v_k = \sum_{i=1}^{L} \sum_{j=1}^{S} \mathring{\chi}_{ij} \,\mathrm{Cov}(g_i m_j, g_k), \quad k = 1, \dots, L, \tag{12a}$$

$$v_k = \sum_{i=1}^{L} \sum_{j=1}^{S} \mathring{\chi}_{ij} \,\mathrm{Cov}(g_i m_j, m_{k-L}), \quad k = L+1, \dots, L+S, \tag{12b}$$

the additive genetic and microbial effects are given by $\vec{\alpha} = \mathring{\vec{\alpha}} + \Sigma^{-1} v$, where $\vec{\alpha} = (\gamma_1, \dots, \gamma_L, \omega_1, \dots, \omega_S)$ are the additive genetic and microbial effects, Σ is defined at the end of the previous section, and $\mathring{\vec{\alpha}} = (\mathring{\gamma}_1, \dots, \mathring{\gamma}_L, \mathring{\omega}_1, \dots, \mathring{\omega}_S)$ are model parameters.

In the absence of gene-microbe interactions, so that $\mathring{\chi}_{ij} = 0$ for all $i = 1, \dots, L$ and $j = 1, \dots, S$, we have $v = 0$ and the additive effects formally defined above become equivalent to the additive effects of the model; $\gamma_i = \mathring{\gamma}_i$, $\omega_j = \mathring{\omega}_j$. However, if $\mathring{\chi}_{ij} \neq 0$ for any host locus i and any microbial taxon j, the formal additive effects and model additive effects are in general no longer equivalent ($\gamma_i \neq \mathring{\gamma}_i$, $\omega_j \neq \mathring{\omega}_j$) because the formal additive effects will also include terms due to gene-microbe interactions.

To unpack this more, consider the example where the effect of a microbe only occurs in the presence of an allele at a haploid biallelic locus such that neither the allele nor the microbe have an effect on the host trait in the absence of the other. In this case, the above model simplifies to $z_{gm} = \mathring{z}_0 + \mathring{\chi} g m$, where $g = 0, 1$ determines the presence of the allele, $m = 0, 1$ determines the presence of the microbe, and $\mathring{\chi}$ quantifies the effect of their interaction. Writing p_{gm} as the frequency of hosts carrying the pair $(g = 1, m = 1)$, p_g the frequency of hosts with the allele (so

the marginal frequency of $g = 1$), and p_m the frequency of hosts with the microbe (so the marginal frequency of $m = 1$), then the additive effect of the allele is $\gamma \propto (p_m - p_{gm})(1 - p_m)$, and the additive effect of the microbe is $\omega \propto (p_g - p_{gm})(1 - p_g)$, where $\propto$ means *proportional to* and the constant of proportionality for both quantities is $\mathring{\chi} p_{gm}/(p_g p_m(1 - p_g)(1 - p_m) - (p_{gm} - p_g p_m)^2)$. Hence, even in the absence of any underlying additive effects in the mechanistic model, the formally defined additive effects of the statistical model are non-zero. Additionally, each of these effects depends on the frequency of the other factor.

Similar results hold for models that include interactions among host genes and interactions among microbial taxa. In supplement section 2 we provide expressions for additive genetic and additive microbial effects given a model that includes all possible pairwise interactions between genes and microbes explained by products of allele counts and microbial abundances.

6 | MICROBIOME MEDIATED RESPONSE TO HOST SELECTION

Because the transmission of microbes is not necessarily lineal (as in direct from parent to offspring, sensu Roughgarden, 2023) nor does it occur with high fidelity relative to genetic transmission (e.g., microbiome composition exhibits significant variation between related individuals, see Tierney et al., 2019; Tavalire et al., 2021), we cannot transfer many of the important simplifying assumptions of classical quantitative genetics regarding inheritance to the study of microbiome mediated traits. These simplifying assumptions have also been central to the power of the classical quantitative genetic approach, such as the use of predigree analysis in the animal model (Wilson et al., 2009). Additionally, the degree to which additive host trait variation explained by microbes mediates an intergenerational response to selection on host individuals is not obvious. In the following subsections we propose a simple classification scheme to account for different sources of microbe acquisition, apply a set of simplifying assumptions to clarify our initial analysis, and consider consequences for a microbially mediated heritable response to selection on host individuals. This analysis motivates definitions of microbial heritabilities and host trait transmissibilities that we introduce below in section 7.

6.1 | Sources of microbial acquisition

As a first step in overcoming the challenge described above, we propose classifying microbes according to different sources of microbial acquisition. Here, we consider three patterns of microbial acquisition:

1. **Externally acquired:** Host-associated microbes are considered *externally acquired* if their ancestors (in the sense of cellular binary fission) never inhabited the microbiomes of any past or present host individuals other than the current host individual they associate with. Then, by definition, externally acquired microbes are not transmitted across host generations and no feedbacks can occur between host microbiomes and sources of external acquisition.
2. **Lineally acquired:** Host-associated microbes are considered *lineally acquired* if they have ancestors (again in the sense of cellular binary fission) in the microbiomes of that host's genetic parents.
3. **Non-lineally acquired:** Host-associated microbes are considered *non-lineally acquired* if they are neither lineally acquired nor externally acquired. For example, a microbe acquired from a social interaction with another host is considered non-lineally acquired so long as none of its ancestors occur in the focal hosts parental microbiomes. Importantly, this definition implies non-lineal sources may include related and unrelated host individuals, but non-lineal acquisition from related individuals may lead to similar patterns as lineal acquisition.

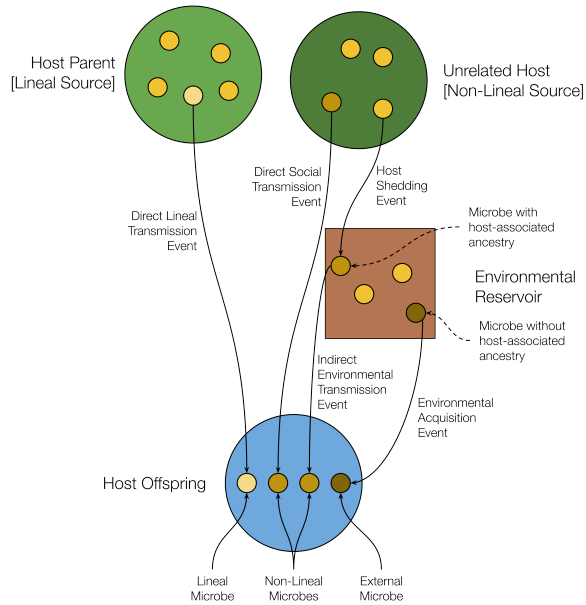

FIGURE 1 An illustration of our definitions of sources of acquisition. Small mustard colored circles (of various shades) represent microbe individuals. The brightest shade corresponds to lineal microbes. The darkest shade corresponds to external microbes. The medium-dark shade corresponds to non-lineal microbes. Larger green circles at the top of the figure represent host individuals. The brown square represents the environmental reservoir of microbes. The blue circle at the bottom represents a host offspring individual.

These definitions, formulated at the scale of microbial individuals, are illustrated in Figure 1. To make use of these definitions for understanding how microbiomes can mediate a response to selection, we evaluate the degree to which each source contributes ancestry across an entire microbial taxa within a host individual, and then average this across host individuals to arrive at a summary of acquisition for each microbial taxa. Considering sources of acquisition at the resolution of microbial taxa is particularly useful in our framework because our framework quantifies microbial effects on host traits at the same scale of biological organization.

6.2 | A model of microbial acquisition

Although many microbial taxa likely exhibit several sources of acquisition, for this initial inquiry we consider a simplified scenario where each taxon only has one source of acquisition. This allows us to explore the consequences of each of these sources on the response to selection. More realistic models that account for the complexity of microbial transmission should be studied in future work. In particular, assuming the S microbial taxa in the host microbiome can be subdivided into S_L lineally acquired taxa, S_N non-lineally acquired taxa, and S_E externally acquired taxa (so that $S = S_L + S_N + S_E$), we can rewrite the additive microbial effect on the average excess $\delta_{gm} = z_{gm} - \bar{z}$ as $\omega_m = \lambda_m + v_m + \varepsilon_m$ where

$$\lambda_m = \sum_{i=1}^{S_L} \lambda_i m_{L,i}, \quad v_m = \sum_{i=1}^{S_N} v_i m_{N,i}, \quad \varepsilon_m = \sum_{i=1}^{S_E} \varepsilon_i m_{E,i}, \tag{13}$$

where the additional subscripts indicate the source each group of taxa is acquired from (*L*ineal, *N*on-lineal, *E*xternal). We additionally set $\bar{\lambda} = \sum_{gm} p_{gm}\lambda_m$, $\bar{v} = \sum_{gm} p_{gm}v_m$, $\bar{\varepsilon} = \sum_{gm} p_{gm}\varepsilon_m$. Taking this partitioning a step further, we can write the additive microbial variance as

$$M_A = M_L + M_N + M_E + C_{LN} + C_{LE} + C_{NE}, \tag{14}$$

where $M_L = \sum_{gm} p_{gm}(\lambda_m - \bar{\lambda})^2$ is the component of additive variance due to lineally acquired microbes (which we refer to as the *additive lineal variance*), $M_N = \sum_{gm} p_{gm}(v_m - \bar{v})^2$ is the component due to non-lineally acquired microbes (the *additive non-lineal variance*), $M_E = \sum_{gm} p_{gm}(\varepsilon_m - \bar{\varepsilon})^2$ is due to externally acquired microbes (the *additive external variance*), $C_{LN} = 2\sum_{gm} p_{gm}(\lambda_m - \bar{\lambda})(v_m - \bar{v})$ is due to non-random associations between the abundances of lineally and non-lineally acquired microbes (the *additive lineal-non-lineal covariance*), $C_{LE} = 2\sum_{gm} p_{gm}(\lambda_m - \bar{\lambda})(\varepsilon_m - \bar{\varepsilon})$ is due to non-random associations between the abundances of lineally and externally acquired microbes (the *additive lineal-external covariance*), and $C_{NE} = 2\sum_{gm} p_{gm}(v_m - \bar{v})(\varepsilon_m - \bar{\varepsilon})$ is due to non-random associations between the abundances of non-lineally and externally acquired microbes (the *additive non-lineal-external covariance*). For later use, we also introduce the additive gene-lineal covariance $C_L = 2\sum_{gm} p_{gm}(\gamma_g - \bar{\gamma})(\lambda_m - \bar{\lambda})$ as the component of additive gene-microbe covariance due to lineally acquired microbes, the additive gene-non-lineal covariance $C_N = 2\sum_{gm} p_{gm}(\gamma_g - \bar{\gamma})(v_m - \bar{v})$ as the component due to non-lineally acquired microbes, and the additive gene-external covariance $C_E = 2\sum_{gm} p_{gm}(\gamma_g - \bar{\gamma})(\varepsilon_m - \bar{\varepsilon})$ as the component due to external microbes.

For the remainder of this paper, we employ the assumption that each taxon has a single source of acquisition, along with the components of variance defined above.

6.3 | Interactions between host selection and microbial acquisition

By definition, externally acquired microbes cannot contribute to a microbiome mediated response of the host trait to selection on hosts. In contrast, lineally acquired microbes will likely make the most reliable contributions to a microbiome mediated response to host selection. The degree to which non-lineally acquired microbes contribute to a microbiome mediated response depends on the degree to which host selection shapes the set of possible non-lineal sources. For instance, if non-lineally acquired microbes are sourced from all host individuals in the parental generation with equal probability independent of the action of host selection (so selection does not shape the set of non-lineal sources), then non-lineally acquired microbes will not contribute to a microbiome mediated response. On the other hand, if non-lineal sources include only the microbiomes of host parents that, for example, survived an episode of viability-based selection, then non-lineally acquired microbes may contribute significantly to a microbiome mediated response.

Based on the above reasoning, to obtain an accurate model for predicting a microbiome mediated response to selection, externally acquired microbes must first be identified and culled from the set of factors considered, and their abundances should be averaged over when calculating z_{gm}. Additionally, it must be determined whether or not non-lineally acquired microbes are sourced from selected parents or from the broader population of unselected parents, because this is likely associated with whether or not they contribute to a response to selection. Having identified the microbial taxa that contribute to a response to selection, we write M_A^{Ψ} (C_A^{Ψ}) for the additive microbial variance (gene-microbe covariance) calculated using only the abudances of those taxa, and refer to this quantity as the *selective* additive microbial variance (gene-microbe covariance). Building on this logic, we anticipate three basic conclusions.

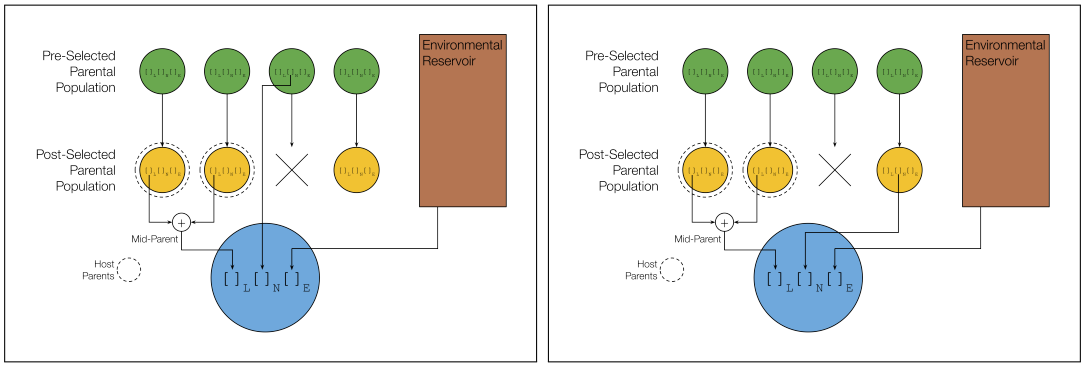

FIGURE 2 Graphical representation for the two models of microbiome inheritance used in our simulations. In the left panel, non-lineal microbes for a given offspring are acquired from a randomly chosen individual in the pre-selected parental population. In the right panel, non-lineal microbes are acquired from a randomly chosen individual in the post-selected population. Circles represent hosts and pairs of brackets represent the lineal, non-lineal, and external microbiome components. The green circles at the top of each panel represent the parental population before an episode of viability selection, and the mustard circles represent the parental population after an episode of viability selection (with vertical straight arrows indicating the trajectories of host individuals). The vertical rectangle on the right represents an environmetal reservoir that external microbes are sampled from. Hosts highlighted with dashed concentric circles are the parents of the focal offspring. The plus symbol joining the lineal components of the parental microbiomes indicates taking an average. Arrows pointing towards offspring brackets represent microbiome transmission.

First, if we summarize the abundances of lineal microbes using presence/absence, and assume host offspring inherit these binary values for each taxon independently, then the inheritance of these microbes is structurally equivalent to the inheritance of genetic alleles at freely recombining loci. Hence, in this case, it is clear that lineal microbes contribute to a response to selection. We therefore anticipate a similar result to hold when presence/absence is replaced with higher resolution summaries of microbial abundances such as approximated relative abundances. In particular, we expect the selective additive microbial variance M_A^{ψ} to always include the additive lineal variance M_L, and the selective additive gene-microbe covariance C_A^{ψ} to always include the additive gene-lineal covariance C_L (defined towards the end of section 6.2).

Second, if non-lineally acquired microbes are sourced from the broader population of unselected parents, then we anticipate non-lineal microbes to not contribute to a response to selection. In this case the selective additive microbial variance would still simplify to the additive lineal variance, $M_A^{\psi} = M_L$, and the selective additive gene-microbe covariance would also still simplify as $C_A^{\psi} = C_L$.

However, as a third conclusion, if non-lineally acquired microbes are sourced from selected parents, we anticipate that their abundances will also contribute to a response to selection. In this case, selective additive microbial variation would become $M_A^{\psi} = M_L + M_N + C_{LN}$ and selective additive gene-microbe covariance becomes $C_A^{\psi} = C_L + C_N$. To test our expectations described above, we implemented a simulation model based on the general setup described at the beginning of section 4, which we now describe.

Simulation Description: Our simulation model assumes that host traits follow an additive model equivalent to that analyzed in section 5, except without any gene-microbe interactions (so $\mathring{\chi}_{ij} = 0$ for each i, j). As a function of pheno-

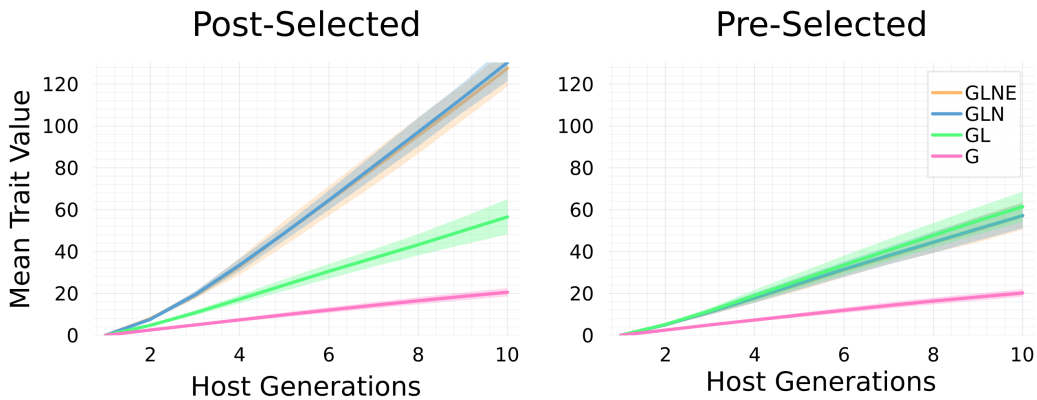

FIGURE 3 Time series plots of average simulated host trait dynamics. Different colors correspond to different combinations of factors. Pink corresponds to only host genes mediating a response to selection (G). Green corresponds to only host genes and lineal microbes (GL). Blue corresponds to host genes, lineal and non-lineal microbes (GLN). Mustard corresponds to host genes, lineal, non-lineal, and external microbes (GLNE). For each combination of factors, simulations were repeated 20 times. Solid lines are averages across these repeated runs, and shaded regions correspond to standard deviations across repeated runs. The panels are divided by non-lineal microbes acquired from post-selected parents (left) and pre-selected parents (right).

type, host fitness is set to $W(z) = \exp(sz)$, which leads to directional selection for larger host traits when $s > 0$ (we set $s = 1e-3$). We assume 100 freely recombining host genetic loci. The abundances of lineally acquired microbes in host offspring are Poisson distributed around the mid-parents of those taxa. For non-lineally acquired microbes we consider two models: 1) each host offspring chooses a single host individual uniformly from the broader unselected parental population as its non-lineal source and 2) each host offspring chooses a single host individual from the selected parental population with probability proportional to its fitness. Once the non-lineal donor is chosen, the host offspring inherits non-lineal abundances that are Poisson distributed around the abundances of non-lineal taxa in the donor. Finally, external microbe abundances are drawn independently and identically from a Poisson distribution for each taxa in each host in each host generation. We assume 100 microbial taxa in each microbiome component, with each taxa having an average abundance of 50 in each host parent. This model of microbial inheritance is illustrated in Figure 2.

Results are obtained by first drawing normally distributed additive effects, and then observed and predicted responses to selection are averaged over randomly drawn genotype-microbiome pairs for host parents, repeated selection experiments, and repeated formation of offspring from selected parents. Figure 3 illustrates mean trait dynamics under our model when different combinations of factors mediate traits, and when non-lineal microbes are sourced from pre-selected or post-selected parents. In addition, time-series of correlations between host allele counts and microbe abundances are shown in Figure 4. Parameter values used for simulating data presented in Figures 3 and 4 are provided Table 1 of the supplement. Parameter values used for simulating data presented in Figure 5 are provided in Table 2 of the supplement. Code to reproduce these results (written in Julia) is provided at the GitHub repository `https://github.com/bobweek/qgmmt`.

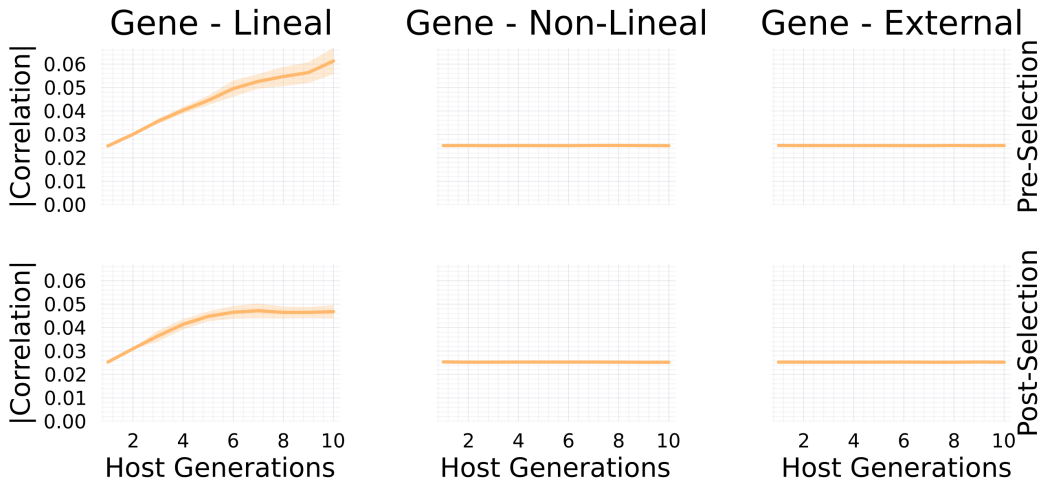

FIGURE 4 Time series plots of absolute values of correlations between host allele counts and microbe abundances. Correlations between allele counts and abundances of lineal microbes (left plots) increase faster when non-lineal microbes are sourced from the pre-selected host parental population in comparison to when non-lineal microbes are sourced from the post-selected host parental population. In contrast, correlations with abundances of non-lineals and externals remains at neutral levels (right plots).

Simulation Results: Our simulation results (summarized in Figure 5) demonstrate that when a host trait is significantly mediated by heritable microbes (such as lineally acquired and possibly non-lineally acquired microbes), then the classical breeders equation, which only accounts for genetic factors, severely underestimates the response to selection. In particular, for microbiome mediated traits, we find that the observed response to selection exceeds predictions based solely on host allele counts:

$$\Delta\bar{z} \geq G_A\beta, \tag{15}$$

where $\Delta\bar{z}$ is the observed change in host mean trait, $\beta = \mathrm{Cov}(W, z)/P$ is the correlation coefficient of host fitness on host trait variance (i.e., the selection gradient), and $G_A\beta$ is predicted change in host mean trait based on the classical breeders equation.

At the opposite extreme, using our model of microbial acquisition and assumptions on microbial inheritance, we find that including all of the host trait mediating microbial taxa as factors in our analysis of variance substantially overestimates the response to selection. This result occurs because many microbes will be externally acquired and thus not transmitted across host generations (which explains why the lines associated with *GLNE* and *GLN* coincide for both panels of Figure 3). More precisely, including trait mediating microbial taxa that are not transmitted across host generations (especially external microbes, but possibly also non-lineal microbes) inflates the additive microbial variance which leads to observations that are exceeded by predictions:

$$\Delta\bar{z} \leq (G_A + M_A + C_A)\beta. \tag{16}$$

In general, results from our simulations agree with our expectations described above. That is, by including *only*

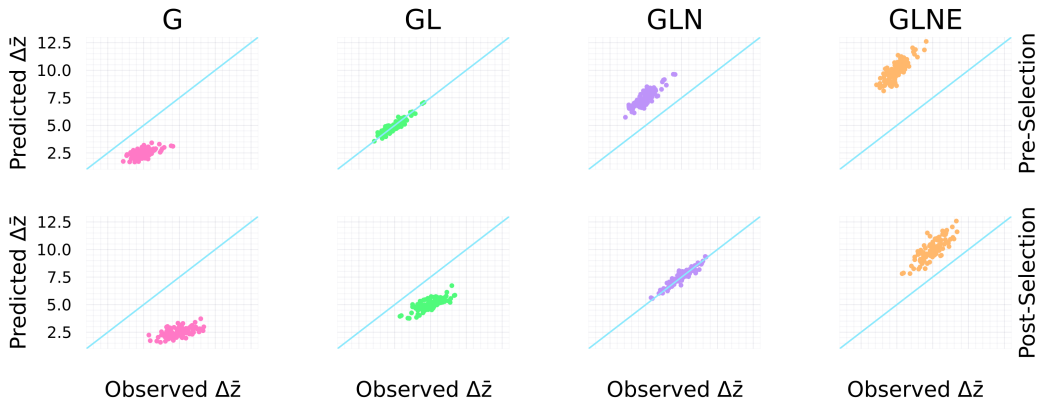

FIGURE 5 Comparison of change in host mean trait over a single consecutive generation ($\Delta\bar{z}$) observed from simulations (x-axis) to that predicted by including different componenents of the host microbiome (y-axis). Each dot corresponds to an average over repeated runs for a given set of randomly drawn additive effects. Colors and column labels follow the same pairing described in the caption for Figure 3. Blue lines have unit slope and zero intercept. This figure demonstrates that $\Delta\bar{z}$ is *overestimated* when *including* either external microbes (GLNE in top and bottom rows) or non-lineal microbes acquired from pre-selected parents (GLN in top row), is *underestimated* when *excluding* either all microbes (G in top and bottom rows) or non-lineal microbes acquired from post-selected parents (GL in bottom row). Predictions match observations on average when including host genes and lineal microbes, but excluding non-lineal microbes acquired from pre-selected parents and external microbes (GL in top row), and when including only host genes, lineal microbes, and non-lineal microbes acquired from post-selected parents (GLN in bottom row).

the transmissible microbes that contribute to an intergenerational response to selection on host individuals, we obtain the heuristic:

$$\Delta\bar{z} = (G_A + M_A^{\psi} + C_A^{\psi})\beta. \tag{17}$$

The dichotomy of whether non-lineal microbes contribute to a selection response is artificial by design. More realistically, because different microbe individuals of the same taxon in a given host microbiome may have different sources of ancestry (in the sense used to define sources of acquisition), microbial taxa cannot be neatly categorized by sources of acquisition as done here. Additionally, non-lineally sourced microbe individuals may vary in the degree to which they contribute to a selection response because they may be sourced from the pre-selected parental population, or from the post-selected parental population, or somewhere along a gradient between the two depending on the life-histories of the hosts and microbes.

7 | HERITABILITIES AND TRANSMISSIBILITIES

Results from the previous sections provide insights into formulating a definition of microbial heritability. In particular, the indices we introduce here assume only microbes acquired from sources that contribute to a response to host selection (such as the lineally acquired and possibly non-lineally acquired microbes, see section 6.3) are included as trait mediating factors while calculating components of additive trait variation. Then, just as the *narrow-sense genetic heritability*, defined as $h^2 = G_A/P$, is useful for predicting the response to selection and can be measured using parent-offspring correlations, we define the *narrow-sense microbial heritability* as $b^2 = M_A^{\psi}/P$, which is also useful for

predicting the response to selection. However, unlike h^2, only the lineal component of b^2 will be measurable from parent-offspring correlations. If non-lineal microbes contribute to a response to selection, then their contribution to b^2 may be quantified by first identifying the non-lineal donor-recipient pairs between the parent and offspring populations, and then measure correlations between donors and recipients. Of course, this approach to estimating b^2 depends on our simplifying assumptions on the partitioning of host microbiome into components acquired from lineal, non-lineal, and external sources. Because the acquisition of each taxa may be distributed across several sources, estimates of b^2 will likely require a more sophisticated correlational analysis.

On their own, the narrow-sense heritabilities are only useful for predicting a response to selection when the host trait is either entirely genetically mediated, or entirely microbially mediated. To obtain accurate predictions for the response to selection when host traits are partially genetically mediated and partially microbially mediated, we introduce notions of *transmissibility*. These quantities are meant to capture all components of host trait variation explained by factors that facilitate a host response to selection (which we refer to as *selective factors* from hereon). Writing P_A^Ψ as the component of host trait variation explained only by additive effects of selective factors, we define the *narrow-sense transmissibility* as $t^2 = P_A^\Psi / P$. By focusing on additive effects, we can use the same general approach outlined in section 4 to quantify P_A^Ψ. Here, because we assume the only selective factors are host genes and microbes, the narrow-sense transmissibility becomes

$$t^2 = \frac{G_A + M_A^\Psi + C_A^\Psi}{P}. \tag{18}$$

Hence, in general $t^2 \neq h^2 + b^2$. Instead, writing $k_{hb} = C_A^\Psi / P$, we can heuristically think of expanding the square $(h + b)^2$ to arrive at $t^2 = h^2 + k_{hb} + b^2$ where k_{hb} takes the place of the undefined symbol $2hb$. Because k_{hb} is a covariance it can be positive or negative. So ignoring k_{hb} while calculating t^2 can positively or negatively bias predictions for a microbiome mediated response to selection. Our work then suggests the form of the breeders equation introduced by Lush (1937), $R = h^2 S$ (where $R = \Delta\bar{z}$ is the response to selection and S is the selection differential), naturally generalizes to $R = t^2 S = (h^2 + k_{hb} + b^2)S$. This reduces to the original expression in the absence of microbiome mediated effects.

In our framework, broad-sense genetic heritability retains the same definition from classical quantitative genetics. In particular, the genotypic value z_g is the genotypic-microbic value z_{gm} averaged over host microbiomes. Then the *broad-sense genetic heritability* is defined as the proportion of host trait variance explained by genotypic variation: $H^2 = \mathrm{Var}(z_g)/P$. In analogy, the *microbic value* z_m is the genotypic-microbic value z_{gm} averaged over host genotypes. To clarify that we are focusing specifically on host trait variation explained by microbes that contribute to a selection response, we propogate the superscript $^\Psi$. In particular, z_m^Ψ is z_{gm} averaged over host genotypes and components of host microbiomes that do not contain selective factors. This suggests that the *broad-sense microbial heritability* should be defined as the proportion of host trait variation explained by selective microbic variation: $B^2 = \mathrm{Var}(z_m^\Psi)/P$. Setting $G_R = \mathrm{Var}(z_g) - G_A$ and $M_R^\Psi = \mathrm{Var}(z_m^\Psi) - M_A^\Psi$ the residual variances left unexplained by additive genetic and selective additive microbial effects respectively, the broad-sense heritabilities can then be expressed as

$$H^2 = \frac{G_A + G_R}{P}, \quad B^2 = \frac{M_A^\Psi + M_R^\Psi}{P}. \tag{19}$$

In general, the sum of these broad-sense heritabilities do not capture all of host trait variation explained by host genotype-microbiome pairs (g, m) because they do not account for covariances between allele counts and microbe

abundances (quantified by C_A^ψ) or for residual variation left unexplained by genotypic values and microbric values (quantified by $P_R^\psi - G_R - M_R^\psi$, where $P_R^\psi = P - P_A^\psi$). More generally, if the host trait is mediated by the selective factors $f = (f_1, \ldots, f_N)$, and z_f is the average trait value among hosts carrying factors f, then we define the *broad-sense transmissibility* as the proportion of phenotypic variance explained by selective factors: $T^2 = \mathrm{Var}(z_f)/P$. Because we assume the only selective factors are host genes and microbes we have $z_f = z_{gm}$, the genotypic-microbic value. Then, defining the symbol $K_{HB} = (C_A^\psi + P_R^\psi - G_R - M_R^\psi)/P$, we obtain an expression for the broad-sense transmissibility as

$$T^2 = H^2 + K_{HB} + B^2. \tag{20}$$

Again, we can intuitively think about calculating the expression for T^2 by expanding the square $(H + B)^2$, with K_{HB} taking the place of the undefined symbol $2HB$. Because $G_R + M_R^\psi \leq P_R^\psi$, the component of K_{HB} due to differences in residual variation will always be non-negative. However, because C_A^ψ may be negative, K_{HB} will be negative when $C_A^\psi < G_R + M_R^\psi - P_R^\psi$. As a result, excluding K_{HB} from calculating T^2 can positively or negatively bias estimates for the proportion of host trait variation exlained by genetic and selective microbial factors.

The utility of the definitions of narrow-sense transmissibility and narrow-sense microbial heritability introduced in this section for predicting a response to selection rely on a set of assumptions that simplify the process of microbial inheritance. Future work is needed to test their utility given the complexity of within host dynamics (Gerber, 2014), the microbiome assembly process (Costello et al., 2012), and host-host transmission (Sarkar et al., 2024).

8 | DISCUSSION

There is growing evidence that microbes can be integral to the functioning of larger organisms (Bordenstein and Theis, 2015). Microbes associated with plant and animal hosts have been shown to contribute to fundamental organismal processes, including development (McFall-Ngai et al., 2013), nutrition (David et al., 2013), pathogen protection (Koch and Schmid-Hempel, 2011) and even behavior (Cryan and Dinan, 2012). Microbes have been suggested to provide their plant and animal hosts with the capacity for rapid evolution (Rosenberg and Zilber-Rosenberg, 2016; Bisschop et al., 2022) and perhaps even to contribute to the evolutionary rescue of larger organisms from rapid environmental change (Pillai et al., 2016; Lennon et al., 2019).

This increasing interest in host-microbe interactions has led to a crucial need for a deeper understanding of how host-associated microbes influence the phenotypes of their hosts, and ultimately their evolution. But developing this understanding has been hampered by the lack of a comprehensive theoretical framework for considering the combined influences of host genetics, host-associated microbes and the surrounding environment on traits that emerge from such host-microbe systems. Theoretical quantitative genetics is uniquely positioned to provide this foundation because it is focused on understanding the inheritance and evolution of the complex traits that result from multiple interacting sources of variation. While quantitative genetics was initially developed only considering genetic factors, it has been extended over the years to consider other non-genetic heritable elements such as epigenetic alleles and cultural memes. Here we extend quantitative genetics by formally incorporating microbiomes as potentially heritable units.

Importantly, microbes are not merely their host's *second genome*; there are fundamental differences between microbes in a microbiome and genes in a genome. These differences make applying quantitative genetic approaches

directly to host microbiomes problematic. As a consequence, there is a need to expand theory of quantitative genetics to incorporate unique aspects of microbiome biology. Here, we have built on previous efforts to establish quantitative genetic frameworks for microbiome mediated traits (Henry et al., 2021) by generalizing the foundations of quantitative genetic theory. Our approach provides a formal definition for the component of phenotypic variation explained by additive effects of host allele counts and microbial abundances (P_A), and how to partition this additive variance into the classical additive genetic variance (G_A) and the newly defined *additive microbial variance* (M_A, the component of host trait variance explained by additive effects of microbe abundances) and *additive gene-microbe covariance* (C_A, which quantifies additive effects due to covariances between allele counts and microbe abundances across host individuals) such that $P_A = G_A + M_A + C_A$.

Furthermore, to make accurate predictions for microbiome-mediated responses to selection on hosts, we found it necessary to introduce additional partitioning of host trait variation explained by host microbiomes. In particular, we suggest host microbiomes may be decomposed into three components: the *lineal* component which contains microbes passed from parent to offspring individuals, the *external* component which contains microbes acquired from the environment that have no previous associations with the host species, and the *non-lineal* component which contains all remaining microbes. We anticipate that whether or not microbes facilitate a response to selection depends on the microbiome component they belong to. When microbial taxa that contribute to a selection response have been identified, we suggest quantifying M_A^{ψ} as the component of host trait variance explained *only* by the additive effects of those taxa, and similar for C_A^{ψ}. Using a simulation model, we find support for a generalized breeders equation taking the form $\Delta\bar{z} = (G_A + M_A^{\psi} + C_A^{\psi})\beta$. Building on this, we suggest definitions that generalize narrow-sense and broad-sense heritabilities to account for microbes that contribute to a selection response.

From this initial expansion, we can make a number of conclusions that are worth further theoretical and experimental exploration. For instance, Figures 3 and 4 together demonstrate that not all evolutionarily important microbes significantly correlate with host genes, and therefore negates a requirement of lineal transmission. In particular, Figure 3 shows that non-lineal microbes sourced from post-selected parents significantly contribute to a sustained response to selection over several host generations. In addition, Figure 4 shows that the within-host abundances of these same microbes do not significantly correlate with host allele counts (where significant here means to have greater magnitudes of correlations than external microbe abundances). Another conclusion is in the converse direction; that not all microbes with abundances that significantly correlate with host allele counts contribute significantly to host trait variation. For example, this may occur when the host population is structured and exhibits random genetic drift.

Both of these conclusions have important implications for how we study host-microbe interactions and their impact on host phenotype. The approaches commonly used for identifying the genes or microbes underlying a particular phenotype (e.g., Genome Wide Association Studies, GWAS, or Microbiome Wide Association Studies, MWAS) require an understanding of how statistical associations form among phenotypes, genes and microbes. Because these associations are not necessarily causal, and because causal pathways may not be detected via statistical associations, there is a need for a more comprehensive theoretical foundation to guide approaches such as GWAS and MWAS. Importantly, simply applying approaches from GWAS to control for genetic correlations from population structure to MWAS will likely lead to significant bias due to the ecological processes that create microbe-microbe and microbe-gene covariances.

In addition to developing an expanded quantitative genetic theory, another challenging but potentially very fruitful area will be to develop statistical inference methods to estimate many of the host and microbe parameters of

such theory. Our approaches to analysis of phenotypic variance, and definitions of heritabilities and transmissibilities provide foundations for such inferential theory. An interesting approach for future work will be to expand genomic regression approaches for inferring quantitative genetic parameters in an expanded quantitative genetic theory (Xavier et al., 2019). Individuals have varying degrees of genetic relatedness, and the covariance between relatedness and phenotypic similarity among individuals is the foundation of all types of inferential approaches for quantitative genetic parameters such as parent-offspring regression (Rice, 2004) and twin analyses (Lynch et al., 1998).

Furthermore, recent work shows that important differences between the foundational quantitative genetic models and instrumental (or statistical) models can lead to problems in the inference of quantitative genetic parameters such as genetic variances and heritabilities from genomic regression if statistical sampling of marker genotypes (as compared to causative QTL) are not taken into account (de los Campos et al., 2015). Similar development of explicit statistical theory for inferring and estimating expanded quantitative genetic parameters (e.g., b^2 and T^2) will be required in addition to further development of the foundational quantitative genetic theory.

The framework presented throughout this paper has both general components that are independent of model assumptions, and specific componenents that are obtained by applying simplifying assumptions. In particular, both the approach to analysis of phenotypic variance in section 4 and our definitions of sources of microbial acquisition in section 6.1 are independent of model assumptions. However, our results on the response of a microbiome mediated trait to selection (illustrated by Figure 5 and equations 15-17) were obtained following a series of simplifying assumptions. These include independence of microbiome components (see section 6.2) and assumptions regarding the inheritance of microbiomes (summarized in Figure 2). In effect, our simulation model ignores within-host microbiome dynamics, the assembly process, and host-host microbe transmission, which has allowed us to focus on the effects of a novel inheritance mechanism on the dynamics of a microbiome mediated quantitative character. Future work is needed to study models in which these assumptions are relaxed, and to apply our general framework of phenotypic variance analysis to both simulated and empirical data.

9 | CONCLUSION

Microbes can be integral to the functioning of their animal and plant hosts, yet it is not well understood how microbiomes contribute to host fitness and evolution. This knowledge gap is due at least in part to the lack of a comprehensive theoretical framework for modeling how host-microbiome system-level traits emerge from the interactions of host genes, microbiome, and environment. We provide one such framework, by expanding theoretical quantitative genetics to include unique aspects of host-associated microbiomes, including multiple forms of Mendelian and non-Mendelian inheritance. This expansion leads to a formalization of several important concepts, including microbial heritabilities and transmissibilities, as well as fundamental quantities such as additive gene-microbe covariances. In addition, our framework provides an approach to partitioning quantitative trait variation into host- genetic and microbial components, allowing the theoretical exploration of how the joint contribution of host and microbiome to trait variation influences the evolution of host-microbiome systems. We consider our theoretical expansion as a first step toward a comprehensive incorporation of host-associated microbes into quantitative genetics.

Acknowledgements We thank Professor Patrick Phillips for his insightful discussions, which have significantly enhanced this manuscript.

LITERATURE CITED

Ali, H. R. K., Hemeda, N. F. and Abdelaliem, Y. F. (2019) Symbiotic cellulolytic bacteria from the gut of the subterranean termite psammotermes hypostoma desneux and their role in cellulose digestion. *AMB Express*, **9**. URL: http://dx.doi.org/10.1186/s13568-019-0830-5.

Arora, J., Kinjo, Y., Šobotník, J., Buček, A., Clitheroe, C., Stiblik, P., Roisin, Y., Žifčáková, L., Park, Y. C., Kim, K. Y., Sillam-Dussès, D., Hervé, V., Lo, N., Tokuda, G., Brune, A. and Bourguignon, T. (2022) The functional evolution of termite gut microbiota. *Microbiome*, **10**. URL: http://dx.doi.org/10.1186/s40168-022-01258-3.

Awany, D. and Chimusa, E. R. (2020) Heritability jointly explained by host genotype and microbiome: will improve traits prediction? *Briefings in Bioinformatics*, **22**. URL: http://dx.doi.org/10.1093/bib/bbaa175.

Benson, A. K., Kelly, S. A., Legge, R., Ma, F., Low, S. J., Kim, J., Zhang, M., Oh, P. L., Nehrenberg, D., Hua, K., Kachman, S. D., Moriyama, E. N., Walter, J., Peterson, D. A. and Pomp, D. (2010) Individuality in gut microbiota composition is a complex polygenic trait shaped by multiple environmental and host genetic factors. *Proceedings of the National Academy of Sciences*, **107**, 18933–18938. URL: http://dx.doi.org/10.1073/pnas.1007028107.

Bisschop, K., Kortenbosch, H. H., van Eldijk, T. J. B., Mallon, C. A., Salles, J. F., Bonte, D. and Etienne, R. S. (2022) Microbiome heritability and its role in adaptation of hosts to novel resources. *Frontiers in Microbiology*, **13**. URL: http://dx.doi.org/10.3389/fmicb.2022.703183.

Bordenstein, S. R. and Theis, K. R. (2015) Host biology in light of the microbiome: Ten principles of holobionts and hologenomes. *PLOS Biology*, **13**, e1002226. URL: http://dx.doi.org/10.1371/journal.pbio.1002226.

Bruijning, M., Henry, L. P., Forsberg, S. K. G., Metcalf, C. J. E. and Ayroles, J. F. (2021) Natural selection for imprecise vertical transmission in host–microbiota systems. *Nature Ecology & Evolution*, **6**, 77–87. URL: http://dx.doi.org/10.1038/s41559-021-01593-y.

Bulmer, M. G. (1971) The effect of selection on genetic variability. *The American Naturalist*, **105**, 201–211. URL: http://dx.doi.org/10.1086/282718.

Bürger, R. (2000) *The mathematical theory of selection, recombination, and mutation*. John Wiley & Sons.

Burns, A. R., Miller, E., Agarwal, M., Rolig, A. S., Milligan-Myhre, K., Seredick, S., Guillemin, K. and Bohannan, B. J. M. (2017) Interhost dispersal alters microbiome assembly and can overwhelm host innate immunity in an experimental zebrafish model. *Proceedings of the National Academy of Sciences*, **114**, 11181–11186. URL: http://dx.doi.org/10.1073/pnas.1702511114.

Camarinha-Silva, A., Maushammer, M., Wellmann, R., Vital, M., Preuss, S. and Bennewitz, J. (2017) Host genome influence on gut microbial composition and microbial prediction of complex traits in pigs. *Genetics*, **206**, 1637–1644. URL: http://dx.doi.org/10.1534/genetics.117.200782.

de los Campos, G., Sorensen, D. and Gianola, D. (2015) Genomic heritability: What is it? *PLOS Genetics*, **11**, e1005048. URL: http://dx.doi.org/10.1371/journal.pgen.1005048.

Costello, E. K., Stagaman, K., Dethlefsen, L., Bohannan, B. J. M. and Relman, D. A. (2012) The application of ecological theory toward an understanding of the human microbiome. *Science*, **336**, 1255–1262. URL: http://dx.doi.org/10.1126/science.1224203.

Cryan, J. F. and Dinan, T. G. (2012) Mind-altering microorganisms: the impact of the gut microbiota on brain and behaviour. *Nature Reviews Neuroscience*, **13**, 701–712. URL: http://dx.doi.org/10.1038/nrn3346.

David, L. A., Maurice, C. F., Carmody, R. N., Gootenberg, D. B., Button, J. E., Wolfe, B. E., Ling, A. V., Devlin, A. S., Varma, Y., Fischbach, M. A., Biddinger, S. B., Dutton, R. J. and Turnbaugh, P. J. (2013) Diet rapidly and reproducibly alters the human gut microbiome. *Nature*, **505**, 559–563. URL: http://dx.doi.org/10.1038/nature12820.

Fisher, R. A. (1918) Xv.—the correlation between relatives on the supposition of mendelian inheritance. *Transactions of the Royal Society of Edinburgh*, **52**, 399–433. URL: http://dx.doi.org/10.1017/S0080456800012163.

— (1941) Average excess and average effect of a gene substitution. *Annals of Eugenics*, **11**, 53–63. URL: http://dx.doi.org/10.1111/j.1469-1809.1941.tb02272.x.

Gerber, G. K. (2014) The dynamic microbiome. *FEBS Letters*, **588**, 4131–4139. URL: http://dx.doi.org/10.1016/j.febslet.2014.02.037.

Goodrich, J. K., Davenport, E. R., Waters, J. L., Clark, A. G. and Ley, R. E. (2016) Cross-species comparisons of host genetic associations with the microbiome. *Science*, **352**, 532–535. URL: http://dx.doi.org/10.1126/science.aad9379.

Henry, L. P., Bruijning, M., Forsberg, S. K. G. and Ayroles, J. F. (2021) The microbiome extends host evolutionary potential. *Nature Communications*, **12**. URL: http://dx.doi.org/10.1038/s41467-021-25315-x.

Knights, D., Silverberg, M. S., Weersma, R. K., Gevers, D., Dijkstra, G., Huang, H., Tyler, A. D., van Sommeren, S., Imhann, F., Stempak, J. M., Huang, H., Vangay, P., Al-Ghalith, G. A., Russell, C., Sauk, J., Knight, J., Daly, M. J., Huttenhower, C. and Xavier, R. J. (2014) Complex host genetics influence the microbiome in inflammatory bowel disease. *Genome Medicine*, **6**. URL: http://dx.doi.org/10.1186/s13073-014-0107-1.

Koch, H. and Schmid-Hempel, P. (2011) Socially transmitted gut microbiota protect bumble bees against an intestinal parasite. *Proceedings of the National Academy of Sciences*, **108**, 19288–19292. URL: http://dx.doi.org/10.1073/pnas.1110474108.

Lande, R. (1976) Natural selection and random genetic drift in phenotypic evolution. *Evolution*, 314–334.

Lennon, J. T., Mueller, E. A., Wisnoski, N. I. and Peralta, A. L. (2019) Microbial rescue effects: how microbiomes can save hosts from extinction. URL: http://dx.doi.org/10.31219/osf.io/snr49.

Lush, J. (1937) *Animal Breeding Plans*. Collegiate Press, Incorporated.

Lynch, M., Walsh, B. et al. (1998) *Genetics and analysis of quantitative traits*, vol. 1. Sinauer Sunderland, MA.

Mackay, T. F. C., Stone, E. A. and Ayroles, J. F. (2009) The genetics of quantitative traits: challenges and prospects. *Nature Reviews Genetics*, **10**, 565–577. URL: http://dx.doi.org/10.1038/nrg2612.

Martiny, J. B. H., Jones, S. E., Lennon, J. T. and Martiny, A. C. (2015) Microbiomes in light of traits: A phylogenetic perspective. *Science*, **350**. URL: http://dx.doi.org/10.1126/science.aac9323.

Maurice, N. and Erdei, L. (2018) *Termite Gut Microbiome*, 69–99. Springer International Publishing. URL: http://dx.doi.org/10.1007/978-3-319-72110-1_4.

McFall-Ngai, M. (2007) Care for the community. *Nature*, **445**, 153–153. URL: http://dx.doi.org/10.1038/445153a.

McFall-Ngai, M., Hadfield, M. G., Bosch, T. C. G., Carey, H. V., Domazet-Lošo, T., Douglas, A. E., Dubilier, N., Eberl, G., Fukami, T., Gilbert, S. F., Hentschel, U., King, N., Kjelleberg, S., Knoll, A. H., Kremer, N., Mazmanian, S. K., Metcalf, J. L., Nealson, K., Pierce, N. E., Rawls, J. F., Reid, A., Ruby, E. G., Rumpho, M., Sanders, J. G., Tautz, D. and Wernegreen, J. J. (2013) Animals in a bacterial world, a new imperative for the life sciences. *Proceedings of the National Academy of Sciences*, **110**, 3229–3236. URL: http://dx.doi.org/10.1073/pnas.1218525110.

Mueller, U. G. and Linksvayer, T. A. (2022) Microbiome breeding: conceptual and practical issues. *Trends in Microbiology*, **30**, 997–1011. URL: http://dx.doi.org/10.1016/j.tim.2022.04.003.

Opstal, E. J. v. and Bordenstein, S. R. (2015) Rethinking heritability of the microbiome. *Science*, **349**, 1172–1173. URL: http://dx.doi.org/10.1126/science.aab3958.

Org, E., Parks, B. W., Joo, J. W. J., Emert, B., Schwartzman, W., Kang, E. Y., Mehrabian, M., Pan, C., Knight, R., Gunsalus, R., Drake, T. A., Eskin, E. and Lusis, A. J. (2015) Genetic and environmental control of host-gut microbiota interactions. *Genome Research*, **25**, 1558–1569. URL: http://dx.doi.org/10.1101/gr.194118.115.

Pillai, P., Gouhier, T. C. and Vollmer, S. V. (2016) Ecological rescue of host-microbial systems under environmental change. *Theoretical Ecology*, **10**, 51–63. URL: http://dx.doi.org/10.1007/s12080-016-0310-3.

Provine, W. B. (2001) *The origins of theoretical population genetics: with a new afterword*. University of Chicago Press.

Rice, S. (2004) *Evolutionary Theory: Mathematical and Conceptual Foundations*. Sinauer. URL: https://books.google.com/books?id=nGpoQgAACAAJ.

Rosenberg, E. and Zilber-Rosenberg, I. (2016) Microbes drive evolution of animals and plants: the hologenome concept. *mBio*, **7**. URL: http://dx.doi.org/10.1128/mBio.01395-15.

— (2018) The hologenome concept of evolution after 10 years. *Microbiome*, **6**. URL: http://dx.doi.org/10.1186/s40168-018-0457-9.

Rothschild, D., Weissbrod, O., Barkan, E., Kurilshikov, A., Korem, T., Zeevi, D., Costea, P. I., Godneva, A., Kalka, I. N., Bar, N., Shilo, S., Lador, D., Vila, A. V., Zmora, N., Pevsner-Fischer, M., Israeli, D., Kosower, N., Malka, G., Wolf, B. C., Avnit-Sagi, T., Lotan-Pompan, M., Weinberger, A., Halpern, Z., Carmi, S., Fu, J., Wijmenga, C., Zhernakova, A., Elinav, E. and Segal, E. (2018) Environment dominates over host genetics in shaping human gut microbiota. *Nature*, **555**, 210–215. URL: http://dx.doi.org/10.1038/nature25973.

Roughgarden, J. (2023) Holobiont evolution: Population theory for the hologenome. *The American Naturalist*, **201**, 763–778. URL: http://dx.doi.org/10.1086/723782.

Roughgarden, J., Gilbert, S. F., Rosenberg, E., Zilber-Rosenberg, I. and Lloyd, E. A. (2017) Holobionts as units of selection and a model of their population dynamics and evolution. *Biological Theory*, **13**, 44–65. URL: http://dx.doi.org/10.1007/s13752-017-0287-1.

Russell, S. L. (2019) Transmission mode is associated with environment type and taxa across bacteria-eukaryote symbioses: a systematic review and meta-analysis. *FEMS Microbiology Letters*, **366**. URL: http://dx.doi.org/10.1093/femsle/fnz013.

Sandoval-Motta, S., Aldana, M. and Frank, A. (2017) Evolving ecosystems: Inheritance and selection in the light of the microbiome. *Archives of Medical Research*, **48**, 780–789. URL: http://dx.doi.org/10.1016/j.arcmed.2018.01.002.

Sarkar, A., McInroy, C. J., Harty, S., Raulo, A., Ibata, N. G., Valles-Colomer, M., Johnson, K. V.-A., Brito, I. L., Henrich, J., Archie, E. A., Barreiro, L. B., Gazzaniga, F. S., Finlay, B. B., Koonin, E. V., Carmody, R. N. and Moeller, A. H. (2024) Microbial transmission in the social microbiome and host health and disease. *Cell*, **187**, 17–43. URL: http://dx.doi.org/10.1016/j.cell.2023.12.014.

Spor, A., Koren, O. and Ley, R. (2011) Unravelling the effects of the environment and host genotype on the gut microbiome. *Nature Reviews Microbiology*, **9**, 279–290. URL: http://dx.doi.org/10.1038/nrmicro2540.

Tavalire, H. F., Christie, D. M., Leve, L. D., Ting, N., Cresko, W. A. and Bohannan, B. J. M. (2021) Shared environment and genetics shape the gut microbiome after infant adoption. *mBio*, **12**. URL: http://dx.doi.org/10.1128/mBio.00548-21.

Theis, K. R. (2018) Hologenomics: Systems-level host biology. *mSystems*, **3**. URL: http://dx.doi.org/10.1128/mSystems.00164-17.

Tierney, B. T., Yang, Z., Luber, J. M., Beaudin, M., Wibowo, M. C., Baek, C., Mehlenbacher, E., Patel, C. J. and Kostic, A. D. (2019) The landscape of genetic content in the gut and oral human microbiome. *Cell Host amp; Microbe*, **26**, 283–295.e8. URL: http://dx.doi.org/10.1016/j.chom.2019.07.008.

Uller, T. and Helanterä, H. (2013) Non-genetic inheritance in evolutionary theory: a primer. *Non-Genetic Inheritance*, **1**. URL: http://dx.doi.org/10.2478/ngi-2013-0003.

Visscher, P. M., Hill, W. G. and Wray, N. R. (2008) Heritability in the genomics era — concepts and misconceptions. *Nature Reviews Genetics*, **9**, 255–266. URL: http://dx.doi.org/10.1038/nrg2322.

van Vliet, S. and Doebeli, M. (2019) The role of multilevel selection in host microbiome evolution. *Proceedings of the National Academy of Sciences*, **116**, 20591–20597. URL: http://dx.doi.org/10.1073/pnas.1909790116.

Walsh, B. and Lynch, M. (2018) *Evolution and selection of quantitative traits*. Oxford University Press.

Wang, J., Chen, L., Zhao, N., Xu, X., Xu, Y. and Zhu, B. (2018) Of genes and microbes: solving the intricacies in host genomes. *Protein & Cell*, **9**, 446–461. URL: http://dx.doi.org/10.1007/s13238-018-0532-9.

Wendling, C. C. and Wegner, K. M. (2015) Adaptation to enemy shifts: rapid resistance evolution to local vibrio spp. in invasive pacific oysters. *Proceedings of the Royal Society B: Biological Sciences*, **282**, 20142244. URL: http://dx.doi.org/10.1098/rspb.2014.2244.

Wilson, A. J., Réale, D., Clements, M. N., Morrissey, M. M., Postma, E., Walling, C. A., Kruuk, L. E. B. and Nussey, D. H. (2009) An ecologist's guide to the animal model. *Journal of Animal Ecology*, **79**, 13–26. URL: http://dx.doi.org/10.1111/j.1365-2656.2009.01639.x.

Xavier, A., Muir, W. M. and Rainey, K. M. (2019) bwgr: Bayesian whole-genome regression. *Bioinformatics*, **36**, 1957–1959. URL: http://dx.doi.org/10.1093/bioinformatics/btz794.

Zilber-Rosenberg, I. and Rosenberg, E. (2008) Role of microorganisms in the evolution of animals and plants: the hologenome theory of evolution. *FEMS Microbiology Reviews*, **32**, 723–735. URL: http://dx.doi.org/10.1111/j.1574-6976.2008.00123.x.

Zimmer, C. (2019) *She has her mother's laugh: The powers, perversions, and potential of heredity*. Penguin.

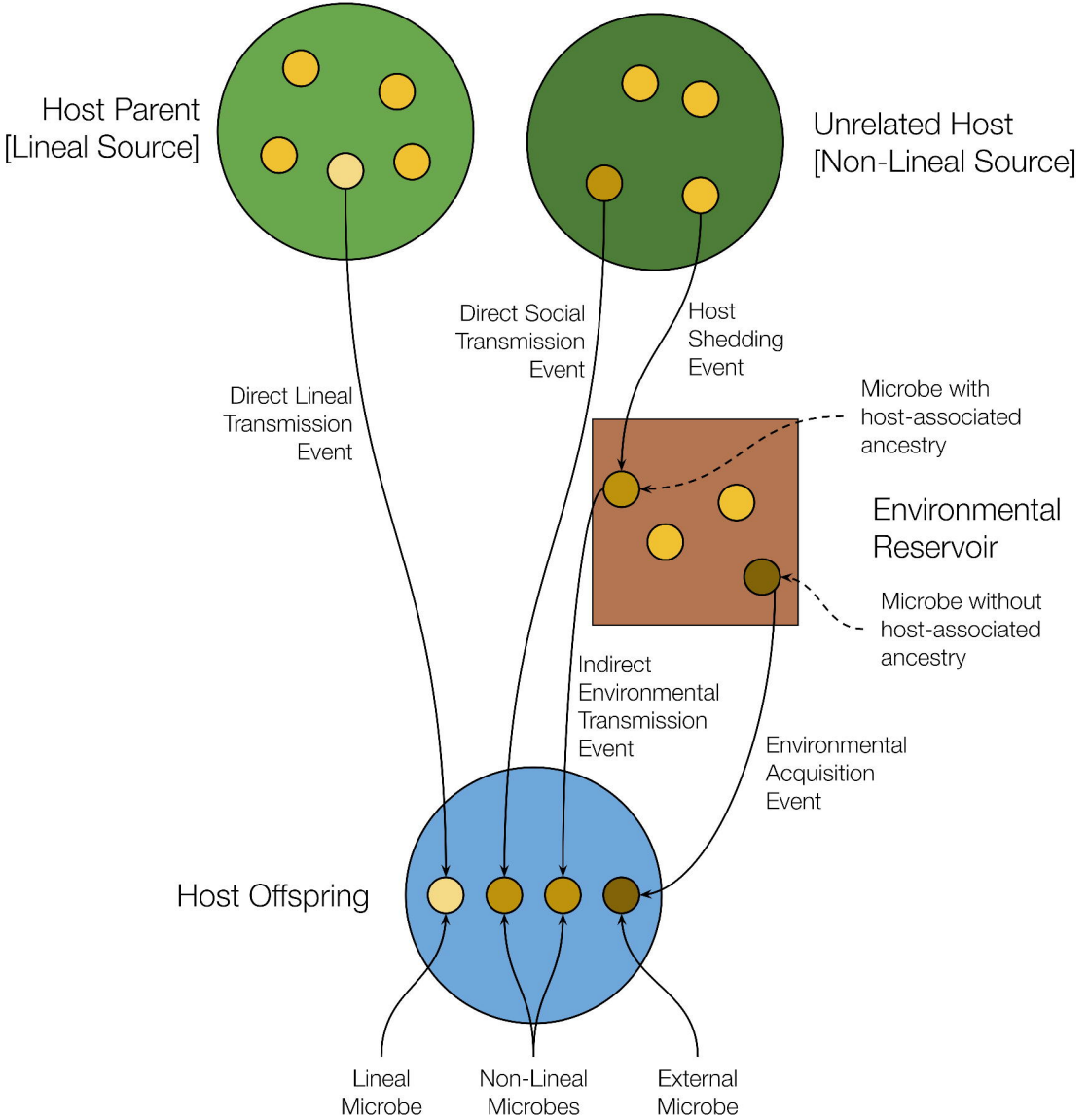
Host Parent
[Lineal Source]
Unrelated Host
[Non-Lineal Source]
Direct Social
Transmission
Event
Host
Shedding
Event
Direct Lineal
Transmission
Event
Microbe with
host-associated
ancestry
Environmental
Reservoir
Microbe without
host-associated
ancestry
Indirect
Environmental
Transmission
Event
Environmental
Acquisition
Event
Host Offspring
Lineal
Microbe
Non-Lineal
Microbes
External
Microbe

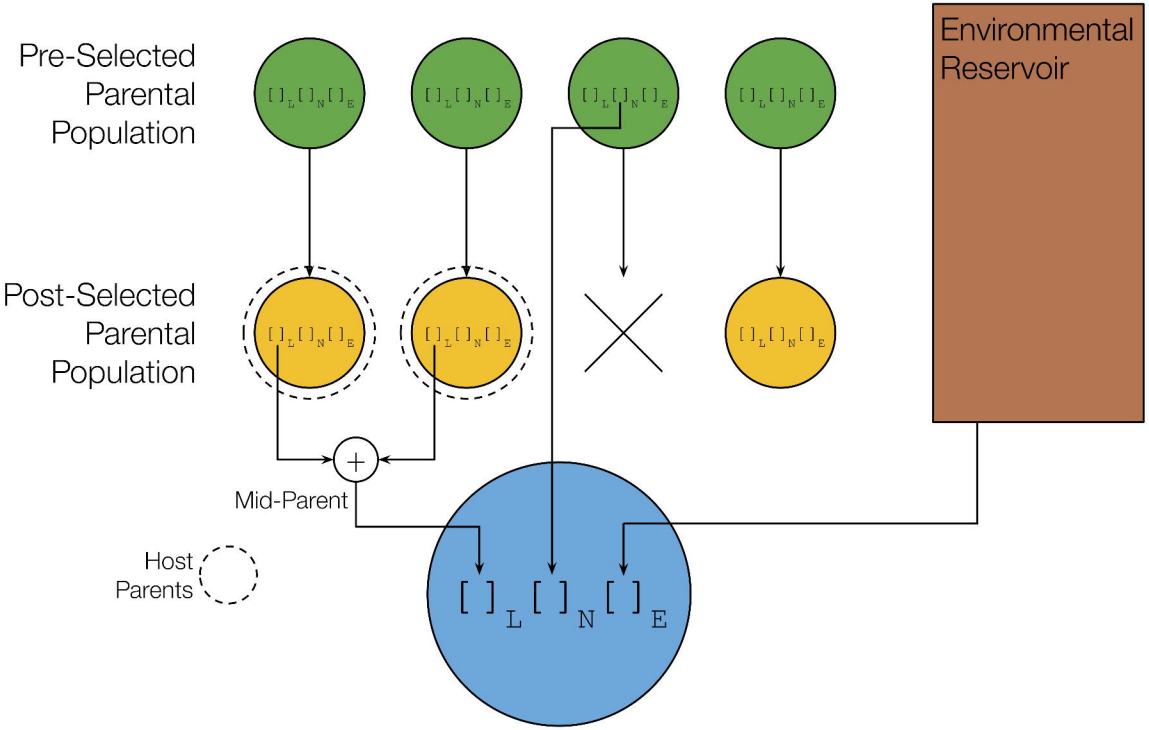
Pre-Selected Parental Population
Post-Selected Parental Population
Environmental Reservoir
Mid-Parent
Host Parents
[ ]L[ ]N[ ]E

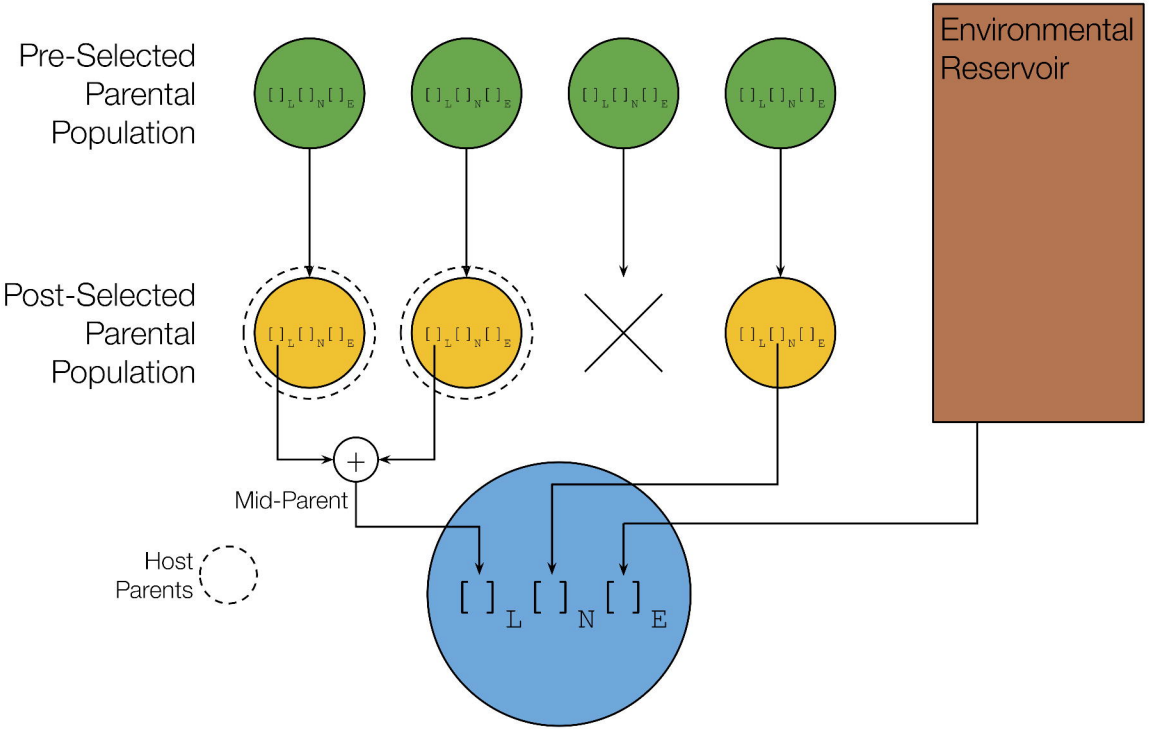
Pre-Selected Parental Population
Post-Selected Parental Population
Environmental Reservoir
Mid-Parent
Host Parents
[ ]L[ ]N[ ]E

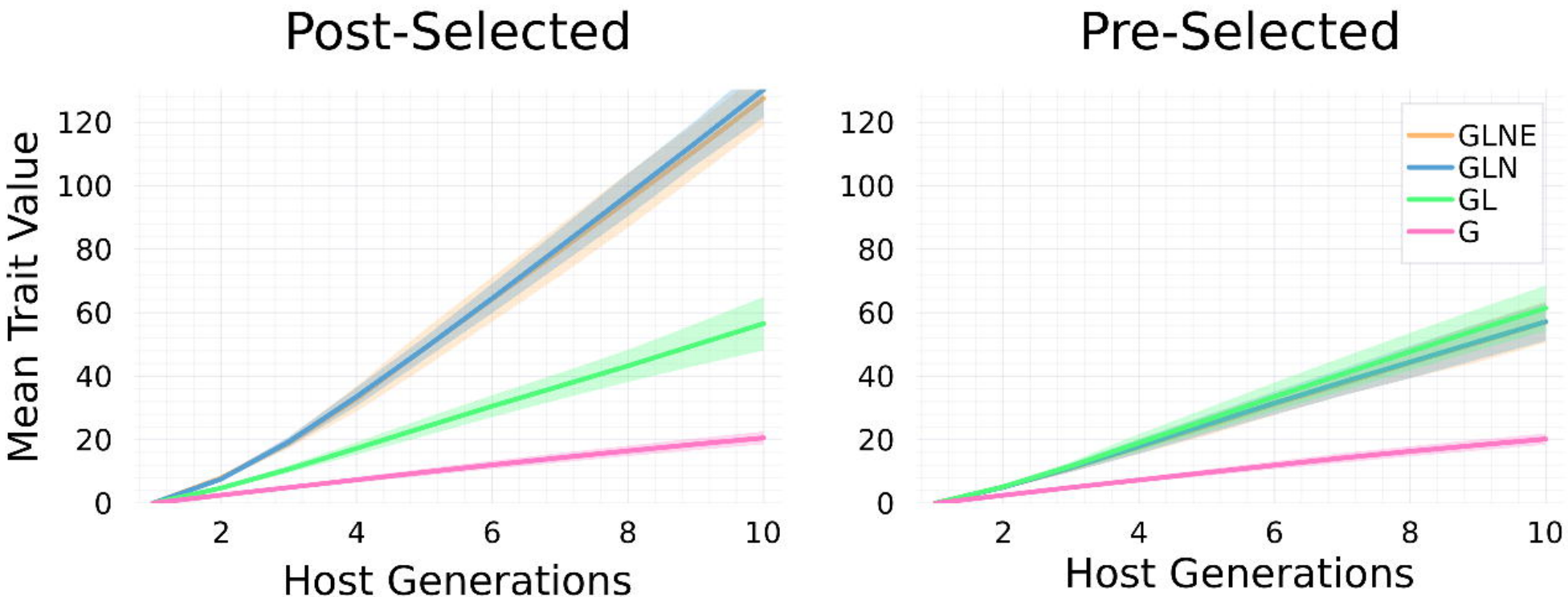
Post-Selected
Pre-Selected
Mean Trait Value
0
20
40
60
80
100
120
2
4
6
8
10
Host Generations
GLNE
GLN
GL
G

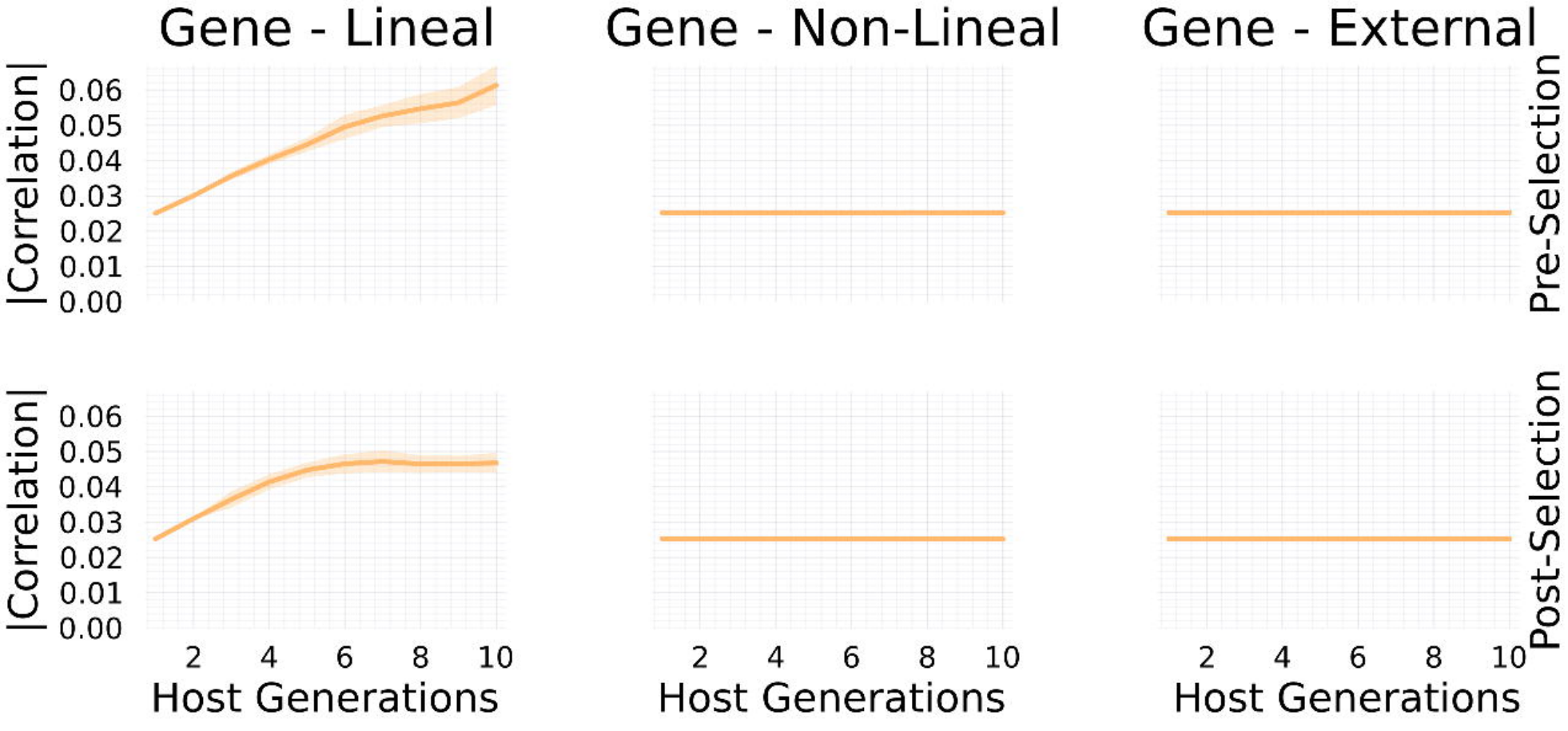
Gene - Lineal
Gene - Non-Lineal
Gene - External
|Correlation|
0.06
0.05
0.04
0.03
0.02
0.01
0.00
Pre-Selection
Post-Selection
2
4
6
8
10
Host Generations

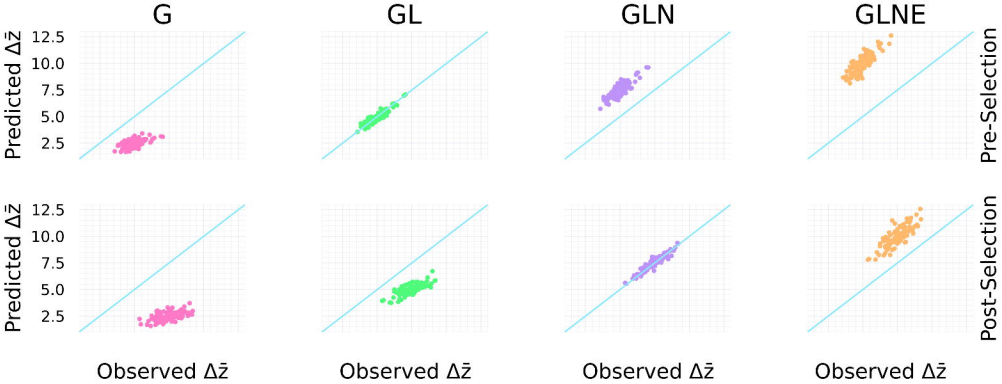
G
GL
GLN
GLNE
Pre-Selection
Post-Selection
Predicted Δz̄
Observed Δz̄
12.5
10.0
7.5
5.0
2.5