Transformation of Petri nets models of biological signaling networks into influence graphs

Simon Gamache-Poirier[a,c,*], Alexia Souvane[b,c,*], William Leclerc[b,c], Catherine Villeneuve[a,c], Simon V. Hardy[a,b,c,**]

[a] *Département d'informatique et de génie logiciel, Université Laval*
[b] *Département de biochimie, microbiologie et de bio-informatique, Université Laval*
[c] *Centre de recherche CERVO, Université Laval*

Abstract

A common depiction for biological signaling networks is the influence graph in which the activation and inhibition effects between molecular species are shown with vertices and arcs connecting them. Another formalism for reaction-based models is the Petri nets which has a graphical representation and a mathematical notation that enables structural analysis and quantitative simulation. In this paper, we present an algorithm based on Petri nets topological features for the transformation of the computational model of a biological signaling network into an annotated influence graph. We also show the transformation of the Petri nets model of the beta-adrenergic receptor activating the PKA-MAPK signaling network into its representation as an influence graph.

1. Introduction

Petri nets are a formal method from computer science used to model, specify, and study concurrent systems. They serve as both a graphical notation and a mathematical framework. Petri nets are utilized to demonstrate qualitative and quantitative properties of various systems and to simulate their evolution through discrete, continuous, or hybrid processes [1, 2, 3]. This formalism has been applied in diverse fields, including the modeling of biological systems [4, 5]. For instance, Petri nets have been used to demonstrate qualitative properties and reproduce complex hybrid dynamical phenomena in biological systems [6, 7, 8, 9, 10].

In biological modeling, systems are often described using ordinary differential equations (ODE) and analyzed with dynamical systems theory tools [11]. Structural techniques such as pathway analysis and model-checking can complement these analyses [12, 13, 14, 15, 16]. Petri nets combine structure and dynamics, allowing the extraction of reaction network models from differential equations [17]. Using time-course simulation data together with structural analysis of a Petri net biological model, one can construct active state transition diagrams and identify temporal subnets of important dynamical activity [18].

Another common representation in biology is the influence graph [19, 20, 21, 22], which depicts directed interactions between molecular species, labeled with influence types (e.g., activation and inhibition). This representation is useful for illustrating control mechanisms regulating various biological processes in cells, such as metabolic or information flow.

In this paper, we present an algorithm that extracts structural features from a reaction network model specified as a Petri net and creates its influence graph representation. Structural properties such as Petri net invariants, exploration sequences of the bipartite graph, and graph properties like

*Authors contributed equally
**Corresponding author
Email address: `simon.hardy@ift.ulaval.ca` (Simon V. Hardy)

maximal component decomposition are used to extract vertices associated with molecular species and arcs showing influence relationships embedded in the reaction network model. The algorithm is designed to process models of cell signaling systems, where biochemical signals (e.g., hormones, nutrients, endogenous chemicals) initiate production, degradation, release, capture, activation, or inhibition of a network of molecules. These networks mainly consist of proteins such as enzymes (e.g., kinases, phosphatases), second messengers, and other small molecules. Signals travel through the signaling network as enzymes activate or deactivate molecules in cascades until the signal's target is reached. Signaling networks not only transmit but also process biological signals using regulatory motifs like negative and positive feedback loops, feedforward loops, and more [23, 24, 25]. Understanding how biological signaling is processed by the cell is a key motivation for computational modeling and simulation of these systems [26].

An influence graph, such as the one generated by our algorithm, displays the network and its regulatory motifs, while simulation data demonstrate the biochemical dynamics responsible for signal processing by the network, triggering a cellular response. The influence graph is an unparalleled tool for developing an engineering perspective on biological systems. Figure 1 illustrates the input and output of the transformation algorithm presented in this paper. The input is the Petri net model depicting the regulation of eight executor proteins by cyclin-dependent protein kinase (Cdk) in the eukaryotic cell cycle (Figure 1a, mathematical model in [27]). The algorithm generates an influence graph from this model. Figure 1b displays a section of the resulting influence graph with the influence of Cdk on four executor proteins. This graph reveals four regulatory motifs: two coherent feedforward loops regulating EPP1 and EPP4 and two incoherent feedforward loops regulating EPP2 and EPP3. These motifs enable Cdk to cyclically regulate the synthesis and activation of executor proteins at four different points in the cell cycle. To fully understand cellular control mechanisms: how cells make decisions, how diseases disrupt these processes, and how to intervene pharmacologically, it is essential to grasp the role of individual regulatory motifs in signaling pathways and their interactions [28]. Obtaining this understanding is a central goal of systems biology [29], and influence graphs are a key method to achieve it.

The transformation algorithm is divided into three phases: preparation, transformation, and annotation. The algorithm detects specific situations and prompts the user with requests for additional information when necessary. This missing information usually corresponds to implicit knowledge in the mathematical model of a biological system. The algorithm can be applied to chemical reaction-based biological models involving binding reactions (where molecules form complexes) or enzymatic reactions (where enzymes transform substrates into products). In differential equations, the kinetic rate of binding reactions is specified by the law of mass action, while the kinetic rate of enzymatic reactions is specified by the Michaelis-Menten formulation if described as a single reaction rather than as three binding reactions.

The first phase of the algorithm performs a preliminary analysis, extracting data from the Petri net model, validating the model if necessary, and conducting a preparatory exploration of the Petri net. The second phase constructs the structure of the influence graph. Finally, the third phase annotates the influence graph with information about active molecular conformations and reactions transmitting the biological signal, determining the type of influence (activation or inhibition). When algorithmically decidable, all transformation and annotation processes are automated. The output of the transformation algorithm can validate the Petri net model and potentially the differential equations model from which it might have originated. In addition, it can be used to create a dynamic representation of the model, allowing visualization of simulation data from a systemic perspective [30, 31, 32].

The paper is organized as follows : Section 2 presents basic terms from Petri net terminology and the marked contextual extension used to model biological systems as reaction network models, along with definitions from graph theory. A detailed introduction to Petri nets can be found in [33]. Section 3 describes the three phases of the proposed algorithm in both textual and algorithmic formats, with simple examples. Section 4 illustrates the proposed algorithm using the Petri net model of the G protein-coupled receptor (GPCR) regulation pathway of the kinases PKA and MAPK (the ODE model was first published in [34]). The final section discusses the different uses of this transformation

a)

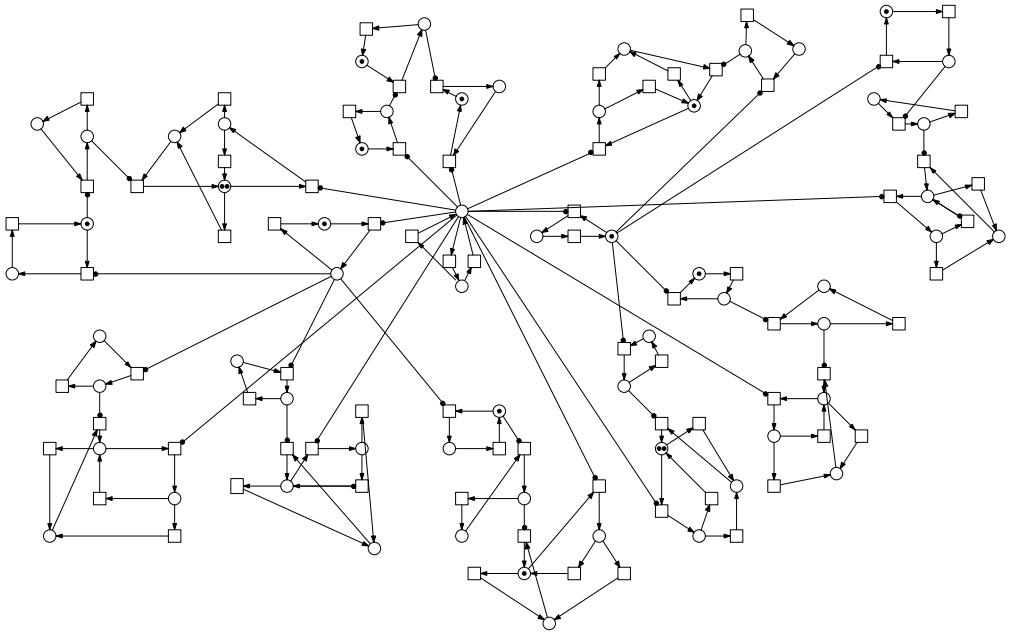

b)

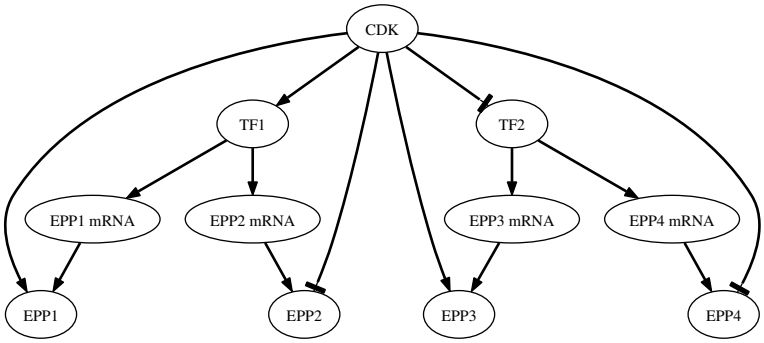

Figure 1: Input and result of the transformation algorithm. In a), the Petri net model of the regulation of eight executor proteins by cyclin-dependent protein kinase (Cdk) in the eukaryotic cell cycle (mathematical model in [27]). In b), part of the influence graph of this model highlighting four feedforward motifs of this network. The full model comprises reactions for the oscillatory regulation of Cdk and four other feedforward motifs.

and potential future improvements of the algorithm.

2. Contextual Petri nets terminology and graph theory definitions

In this section, we formally define the marked contextual Petri net and other terms for the Petri net terminology and other definitions from graph theory that are used in the graph transformation algorithm presented in this paper. A marked contextual Petri net N, i.e. a Petri net with read arcs, is a six-tuple, $N = (P, T, F, C, W, M_0)$, where $P = \{p_1, p_2, ..., p_n\}$ is a finite set of n places, $T = \{t_1, t_2, ..., t_m\}$ is a finite set of m transitions, $F \subset (P \times T) \cup (T \times P)$ is a set of arcs, $C \subset P \times T$ is a set of read arcs, $W : F \cup C \to \mathbb{N}$ is a weight function that associates a positive integer to each regular or read arc and $M_0 : P \to \mathbb{N}$ is the initial marking that assigns a non-negative integer to each place. In Petri net theory, the marking represents the number of tokens present in each place. A Petri net is a bipartite graph since $P \cap T = \emptyset$ and $P \cup T \neq \emptyset$ (see Definition 2 and Figure 2 for an example).

For $x \in P \cup T$, let ${}^\bullet x := \{y \in P \cup T | (y,x) \in F\}$ the preset of x (either pre-places or pre-transitions) and $x^\bullet := \{y \in P \cup T | (x,y) \in F\}$ the postset of x (either post-places or post-transitions). The context of a place p is defined as $\underline{p} := \{t \in T | (p,t) \in C\}$, and the context of a transition t as $\underline{t} := \{p \in P | (p,t) \in C\}$. A read arc can only start at a place to connect to a transition.

A function $m : P \to \mathbb{N}$ is called the marking of N. A transition t is enabled at m if $m(p) \geq w(p,t)$ for all $p \in \underline{t} \cup {}^\bullet t$. Once enabled, t can fire, leading to marking m', where $m'(p) = m(p) - w(p,t) + w(t,p)$ for all $p \in {}^\bullet t \cup t^\bullet$. The firing of a transition can be viewed as the displacement of tokens from input places to output places. By definition, the weight of read arcs is taken into account in the enabling of transitions, but the mark of the places of context $\underline{t}$ of transitions t is not modified by the firing of these transitions, hence the term "read arcs".

The incidence matrix $\mathbf{A} = [a_{ij}]$ is a $n \times m$ matrix of integers such that $a_{ij} = a_{ij}^+ - a_{ij}^-$, where $a_{ij}^+ = w(j,i)$ is the weight of the arc from transition j to post-place i ($j^\bullet$), and $a_{ij}^- = w(i,j)$ is the weight of the arc from pre-place i (${}^\bullet j$) to transition j. The incidence matrix excludes the weights of read arcs C.

A p- or place invariant (t- or transition invariant) is a n-vector y (m-vector x) of integers such that $\mathbf{A}^t \cdot y = 0$ ($\mathbf{A} \cdot x = 0$). The set of places (transitions) corresponding to non-zero entries in a place invariant $y \geq 0$ (transition invariant $x \geq 0$) is termed 'the support of an invariant' and is denoted by $\|y\|$ ($\|x\|$). An invariant y is minimal if there is no other invariant y_1 such that $y_1(p) \leq y(p)$ for all p. A t-invariant is called trivial if it is composed of two transitions and their sets of pre- and post-places are symmetrically inverse.

Example 1: Figure 2 shows a small Petri net with places p_1 to p_5 and transitions t_0 to t_3 connected by several arcs. The arc between place p_3 and transition t_2 is the only read arc (the head of the arc is a circle instead of an arrow). This Petri net model represents a simple reaction network model. Transitions t_0 and t_1 correspond to a reversible binding reaction, where the molecular species associated with places p_1 and p_2 bind to form the complex p_3 through the firing of t_0 and unbind through the firing of t_1. The read arc indicates that the presence of p_3 is necessary for the reaction t_2 to occur, but that the marking of p_3 is not modified by the firing of the connected transition. This can represent an enzymatic reaction in which p_3 is the enzyme, p_4 is the substrate and p_5 is the product. t_3 is the reverse reaction.

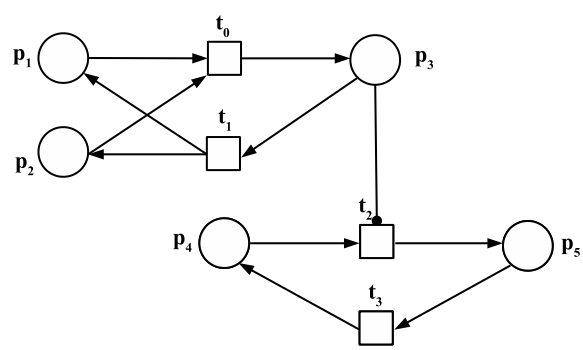

Figure 2: The Petri net N_1 representing a simple network model with four biochemical reactions: the association (t_0)/dissociation (t_1) of two molecular species to form a complex, and the direct enzymatic reaction (t_2) and its reverse (t_3).

The algorithm also incorporates concepts from graph theory. In general, a graph $G = (V, E)$ consists of a finite set V of vertices and a finite set $E \subseteq V \times V$ of edges. The edge $(v_1, v_2) \in E$ is a link between the vertices v_1 and v_2. The proposed algorithm uses interaction graphs and influence graphs which are variants of general graphs and are defined in subsections 3.2.1 and 3.2.3. The algorithm also performs a complete bipartition decomposition following Definitions 1 to 4.

Definition 1: A clique is a subset of vertices in a graph such that every vertex of the clique is connected to one another (i.e. every possible pair of vertices in a clique are adjacent). The subgraph induced by a clique is complete.

Definition 2: A bipartite graph $G = (V_1, V_2, E)$ is a graph whose vertices can be divided into two disjoint and independent sets (for V_1 and V_2, $V_1 \cap V_2 = \emptyset$) such that every edge connects a vertex from one set to a vertex from the other set and never two vertices from the same set. V_1 and V_2 are partitions of G.

Definition 3: A complete bipartite graph $G = (V_1, V_2, E)$, or biclique, is a bipartite graph in which every vertex of the first set of vertices is connected to every vertex of the second set. That is for every two vertices $v_1 \in V_1$ and $v_2 \in V_2$, (v_1, v_2) is an edge in E.

Definition 4: The complete bipartition decomposition of a directed graph G is a set of complete bipartite subgraphs $H = (V_1, V_2, E)$ of G such that no $H' = (V_1', V_2', E')$ exists such that V_1 is a subset of V_1' and V_2 is a subset of V_2'. All vertices v of V_1 are source vertex in G with respect to all target vertex in V_2. Such a subgraph H is said to be a maximal complete bipartite component of the graph G.

3. Description of the algorithm to transform a biological Petri net model into an annotated influence graph

In this section, we describe the proposed algorithm in detail. Section 3.1 covers the first phase of the algorithm also named the preparatory phase. Section 3.2 describes the second phase of the algorithm, during which the influence graph is created. In this graph, vertices and arcs represent signaling molecules and their signaling interactions, respectively. Finally, Section 3.3 describes the third phase, where the influence graph is annotated. The arcs of the graph are classified as either activation or inhibition, and both vertices and arcs are annotated with elements that allow for the incorporation of the simulation data of a mathematical model to create a dynamic animation of the graph. Table 1 provides an overview of the transformation algorithm highlighting the steps in which the algorithm requests additional information if necessary.

3.1. Phase I: Preparatory phase and Petri net analysis of the model

In the first phase of the proposed algorithm, known as the preparatory phase, the biological Petri net model is analyzed to identify and validate structural components such as p-invariants and signaling segments. The Petri net model is also explored to determine a sequence of activation steps from a biological perspective, starting from a signaling source to one or more biological targets. The outputs of this phase are several data structures that are used to build the influence graph in the second phase of the algorithm.

3.1.1. P-invariant analysis and validation

The algorithm starts with computing all non-negative, minimal-support p-invariants and t-invariants of the Petri net model (see Section 2) with an implementation of the Fourier-Motzkin (FM) algorithm [35]. The reaction-based biological model of a signaling network usually contains several conservation relationships between state variables (in other words, the sum of these variables is constant). These variables form p-invariants that account for the different biological molecular species that are either transformed variations of the same molecule (e.g., a protein in different phosphorylation states, such

Inputs: Petri net model and signaling source place		
Phase I	Preparation	**1. P-invariant analysis and validation** Sends request to validate similar p-invariants if present Output: Table *placeToInvariant*
		2. Identification of signaling segments Output: List of signaling segments
		3. Exploration of the Petri net Output: Table *RFAP*
Phase II	Transformation	**4. Building the interaction graph** Uses table *placeToInvariant* to create vertex Uses table *RFAP* to create interaction edges Outputs: $G_{interaction}$ and Table *OE*
		5. Removal of interaction edges with the signaling segments rule Iterates through *OE* to remove edges from $G_{interaction}$ with the list of signaling segments Uses the data structure `recorder` that contains several `records`
		6. Building the influence graph Decomposes the graph into maximal bipartite components and verifies signal condensation relationships Sends request to choose the interaction partner in molecular complex if undecidable Output: Unannotated $G_{influence}$
Phase III	Annotation	**7. Detecting signaling places and associating them with the vertices** Sends requests for leaves, dissociation states and active states if every place is active or inactive
		8. Associating signaling transitions with influence arcs
		9. Determining the type of arcs of the influence graph
Output: Annotated influence graph		

Table 1: Overview of the transformation algorithm to create an annotated influence graph from a biological Petri net model

as unphosphorylated MAPK, MAPK with a single phosphorylation and MAPK with two phosphorylations) or molecules that are part of several molecular complexes (e.g., the Ca^{2+} ion in complex with different proteins, such as $CaM.Ca_4$, PDE.Ca and AC.Ca) [36]. In these two cases, the sum of the concentrations is constant, indicating a conservation relationship. The algorithm presented in this paper relies on this relationship between p-invariants and biological entities to identify the vertices of the influence graph. In Example 2 and Figure 3, we show an example of the result of p-invariant and t-invariant analysis on the Petri net N_1.

Example 2: Consider the Petri net N_1 in Figure 3 and its incidence matrix $\mathbf{A}$. By solving the equation $\mathbf{A}^t \cdot y = 0$, we identify three minimal p-invariants: $\|y_1\| = \{p_1, p_3\}$, $\|y_2\| = \{p_2, p_3\}$ and $\|y_3\| = \{p_4, p_5\}$. Each p-invariant corresponds to a conservation relationship between molecular species. Solving the equation $\mathbf{A} \cdot x = 0$, we find the following t-invariants: $\|x_1\| = \{t_0, t_1\}$, $\|x_2\| = \{t_2, t_3\}$. These two t-invariants are trivial. In biological terms, the molecular species represented by y_1 and y_2 interact to form a complex, which acts as an active enzyme. This enzyme modifies the molecular species y_3 , transforming it from state p_4 to state p_5.

Definition 5: E_p denotes the set of all p-invariants place p belongs to.

After the p-invariant analysis is performed, an entry is made in the lookup table *placeToInvariant* for each place, listing the p-invariants this place belongs to.

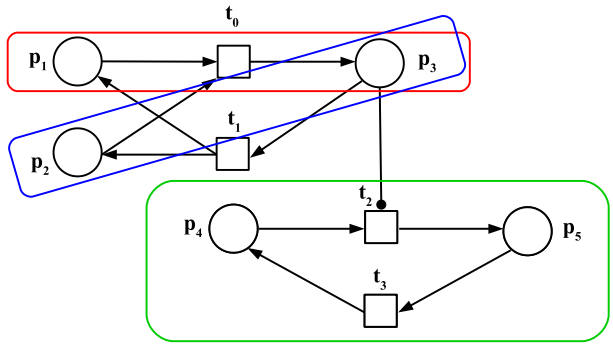

Figure 3: Result of the p-invariant analysis performed on the Petri net N_1. In red, blue and green are the three minimal p-invariants y_1, y_2 and y_3 respectively.

Definition 6: $placeToInvariant$ denotes a lookup table such that $placeToInvariant(key) = E_p$. The value associated with each key p is the set of p-invariants E_p to which the place p belongs: $placeToInvariant(p) = E_p$. An example of the lookup table $placeToInvariant$ for the previous p-invariant analysis (Figure 3) is given in Table 2.

Place	E_p
p_1	y_1
p_2	y_2
p_3	y_1, y_2
p_4	y_3
p_5	y_3

Table 2: The lookup table $placeToInvariant$ for the Petri net of Figure 3.

In Heiner et al. [36], the authors suggested that every p-invariant corresponds to a valid biological component of a model. However, we found a counter-example to this statement, presented in Figure 4. This Petri net model includes 4 bidirectional biochemical reactions involving molecular species A (an inhibitor), B (a second inhibitor) and C (an enzyme). Initially, B is in complex with two molecules of C, inhibiting them. B also has two binding sites for A. When the complex BC_2 binds to two molecules of A, the inhibitor B is repressed, and the enzyme C is released in its active form. One would expect the structural analysis of this model to identify three p-invariants corresponding to the molecular species A, B and C. However, this model has four p-invariants ($\{BC_2, BC_2_A, BC_2_A_2, BC_A_2, B_A_2\}$, $\{BC_2, BC_2_A, BC_2_A_2, BC_A_2, C\}$, $\{A, BC_2_A, BC_2_A_2, BC_A_2, B_A_2\}$ and $\{A, BC_2_A, BC_2_A_2, BC_A_2, C\}$). Despite the names of the places, it is mathematically impossible to determine from an invariant analysis alone whether molecule A is bound to B, C, or both. The structural analysis identifies every possibility. However, to obtain the correct vertices for the biological influence graph from a biological Petri net model, only p-invariants corresponding to valid biological entities must be considered. Thus the results from the p-invariant analysis have to be validated. We found that the support of an invalid p-invariant shares a high degree of similarity with the support of a valid p-invariant. To assist in detecting invalid p-invariants, the algorithm detects similar p-invariants using an arbitrary threshold of 60%.

Definition 7: Two p-invariants y_1 and y_2 are considered similar if $|(\|y_1\| \cap \|y_2\|)|/max(|\|y_1\||, |\|y_2\||) > 60\%$.

When two similar p-invariants are detected, a request is sent to a user to determine if one of the p-invariants is invalid. The p-invariant selected as invalid is then removed from table $placeToInvariant$.

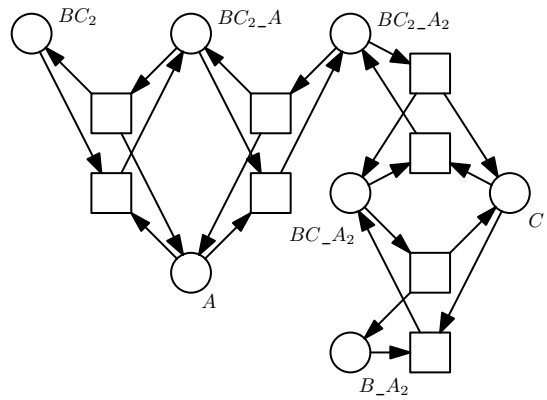

Figure 4: Petri net model of biochemical reactions with more p-invariants (4) than real molecular species (3: A, B and C). This example justifies the need for a validation of the detected p-invariants.

3.1.2. Identification of signaling segments

In the second phase of the algorithm, an interaction graph is built to track the molecular signal as it is transduced through the signaling network, starting from a place acting as a signaling source. To prevent the signal from traveling backwards, a transformation rule defined in subsection 3.2.2 removes edges from the initial interaction graph built by the previous rule based on specific sets of transitions, which we call signaling segments. These segments consists of sets of transitions that operate as units connected together to transmit biological signals throughout the network. In this rule of the first phase of the algorithm, signaling segments are identified from the t-invariants of subnets of N. These subnets comprise the places of a p-invariant and the transitions connecting them in the Petri net model. Consequently, there are as many subnets in the Petri net model as there are p-invariants.

Definition 8: Let $\Delta_{N_{y_i}} := \{\|x_1\|, \ldots, \|x_n\| | \mathbf{A_{N_{y_i}}} \cdot x = 0\}$ be the set of the n minimal t-invariant support sets of the subnet N_{y_i}. The set of signaling segments of subnet N_{y_i} is defined as $SS_{N_{y_i}} = \{\bigcup_{\|x_i\| \in \Delta_{N_{y_i}}} \|x_i\| \mid \|x_i\| \cap \|x_j\| \neq \emptyset\}$. A signaling segment is a set of transitions created by the union of every minimal t-invariant supports of the subnet having at least one transition in common. A p-invariant subnet can have more than one signaling segment.

The results of this rule are stored in the sets $SS_{N_{y_i}}$, one for each p-invariant, which will be used in the second part of the algorithm.

Example 3: In the Petri net N_1, the three subnets N_{y_1}, N_{y_2} and N_{y_3} are analyzed, one for each p-invariant. For example, the subnet N_{y_1} for the p-invariant y_1 contains the places p_1 and p_3 connected to the transitions t_0 and t_1. These transitions form the support of the only t-invariant of the subnet N_{y_1}, and this set is a signaling segment. The sets of signaling segments of this model are $SS_{N_{y_1}} = \big(\{t_0, t_1\}\big)$, $SS_{N_{y_2}} = \big(\{t_0, t_1\}\big)$ and $SS_{N_{y_3}} = \big(\{t_2, t_3\}\big)$. Due to the simplicity of this example, the signaling segments correspond to trivial t-invariants. However, in more complex nets like the model N_2 of Subsection 3.2.3 and the model N_{GPCR} from Section 4, the set of a signaling segment might contain several trivial t-invariants merged together if they have transitions in common.

3.1.3. Exploration of the Petri net model starting from the signaling source of the network to create an exploration sequence

The final step of the preparatory analysis in the first phase of the algorithm involves an exploration sequence of the Petri net, moving from place to place through transitions. Starting from a signaling

source place provided by the user, the algorithm performs a depth-first search (DFS) of the Petri net. This sequence is recorded in another data structure: a lookup table named $RFAP$ (for ReachedFromAllPlaces) is built as the Petri net is explored and places are visited. The exploration sequence will be used in the transformation phase to build the interaction graph. From the visited place p_{source}, every post-transition $t \in {p_{source}}^{\bullet}$ is visited, and their post-places $p_{target} \in t^{\bullet}$ are reached. To the three vertices p_{source}, p_{target} and t, a number corresponding to the *step* of exploration is added, forming a quadruplet. The exploration then continues from these newly visited places. Each place can be visited only once.

Definition 9: A quadruplet q_i is composed of a source place, a target place, a transition and a step. It is stored in a list as $[p_{source}, p_{target}, t, step]$. The step is a number referring to the step rank in the depth-first search. An example of a quadruplet of Petri net vertices is shown in Figure 5.

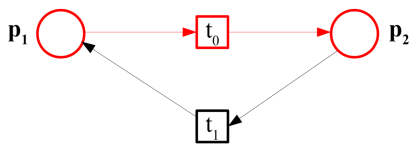

Figure 5: Example of the quadruplet $[p_1, p_2, t_0, 0]$ (in red). In this case, the exploration step is 0 because it is the first step from the specified signaling source p_1.

An entry is made in the lookup table $RFAP$ for each place p. The entries in the lookup table $RFAP$ are a list of the quadruplets in which p is the source place.

Definition 10: $RFAP$ denotes a lookup table such that $RFAP(key) =$ set of quadruplets. The value associated with each key p is a set of quadruplets whose source place is p.

Example 4: Let p_1 be the place of the signaling source of the model. This is the place where the exploration of the Petri net N_1 starts. Table 3 shows the $RFAP$ lookup table for the DFS of the Petri net N_1. A complete description of how the table is built is provided in the supplementary material.

Place	Quadruplets $[p_{source}, p_{target}, t, step]$
p_1	$[p_1, p_3, t_0, 0]$
p_2	$[p_2, p_3, t_0, 2]$
p_3	$[p_3, p_1, t_1, 1]$, $[p_3, p_2, t_1, 1]$, $[p_3, p_5, t_2, 1]$
p_4	$[p_4, p_5, t_2, 3]$
p_5	$[p_5, p_4, t_3, 2]$

Table 3: Places and their quadruplets in the lookup table $RFAP$ for the Petri net N_1.

The first phase of the proposed algorithm concludes with the exploration of the Petri net model. During this analysis, similar p-invariants are detected to verify their biologically validity. Additionally, three different data structures are created from the Petri net of the biological signaling model: 1) the lookup table *placeToInvariant* containing p-invariant information, 2) a list of signaling segments of the Petri net and 3) the $RFAP$ lookup table with an exploration sequence of the places and transitions of the Petri net from a designated source place. This information is used in the second phase of the algorithm to build the influence graph. The preparatory phase of the proposed algorithm is formally described in Algorithm 1.

```
/* Phase 1:  Preparatory phase and Petri net analysis                                  */
input  : A marked contextual Petri net N, its incidence matrix A and a signaling source place p_source
output: The lookup table placeToInvariant, a list containing all the sets SS_{N_{y_i}} of signaling
        segments for each subnet N_{y_i} for the p-invariants y_i of N and the lookup table RFAP
/* Invariant analysis and p-invariant validation (3.1.1)                               */
find the p-invariants y_i of N by solving A^t · y = 0 and create placeToInvariant;
find the t-invariants x_i of N by solving A · x = 0;
detect pairs of similar p-invariants y_i, request validation and delete invalid p-invariants from
  placeToInvariant;
/* Identify signaling segments (3.1.2)                                                 */
foreach p-invariant subnet N_{y_i} of N do
    find the t-invariant supports ‖x_i‖ of N_{y_i} by solving A_{N_{y_i}} · x = 0;
    merge all t-invariant supports having at least one transition in common;
    add the resulting sets of transitions (signaling segments) to SS_{N_{y_i}} and associate the p-invariant y_i
      with each of them;
end
/* Perform a depth-first search of N from the place p_source (3.1.3)                   */
initialize the stack S := {} and step := 0;
foreach place p in N do
    set visited[p]:=false;
    initialize RFAP(p) := {};
end
push (p_source,step) in S;
while S is not empty do
    pop (p_s,step) from S;
    if not visited[p_s] then
        set visited[p_s]:=true;
        foreach t in p_s• do
            foreach p_t in t• do
                set RFAP(p_s) := RFAP(p_s) ∪ [p_s, p_t, t, step];
                push (p_t,step + 1) in S;
            end
        end
    end
end
```

Algorithm 1: Preparatory phase and Petri net analysis (phase I)

3.2. Phase II: Transforming the Petri net model into an influence graph

In the second phase of the Petri net transformation algorithm, an influence graph is constructed from the biological Petri net model through three transformation rules and using the three data structures created in the previous phase. In the first rule of the second phase, the intermediate representation of the interaction graph is built, establishing the relationships between the p-invariant sets of the Petri net model. After being created, some edges in the interaction graph are removed following the second rule based on signaling segments. The third and final rule transforms the interaction graph into the influence graph. This graph will be annotated in the third phase of the algorithm.

3.2.1. Building the interaction graph of the Petri net model

The first rule of the second phase of the algorithm is to transform the Petri net model into an interaction graph. An interaction graph is a directed multigraph in which no self-loops are permitted,

and multiple edges between any two vertices are possible. The interaction graph $G_{interaction} = (V, E)$ consists of a finite set V of vertices and a finite set $E \subseteq V \times V$ of edges. The edge $(v_1, v_2) \in E$ is a link between the vertices v_1 and v_2. In the interaction graph, a vertex is associated with one or several p-invariants, and an edge is associated with a unique quadruplet (see definition 9). If we consider v_i a vertex of $G_{interaction}$, we denote $Inv\text{-}G_{interaction}(v_i)$ as the unique set of p-invariants associated with v_i. If we consider e_i an edge of $G_{interaction}$, we denote $Tr\text{-}G_{interaction}(e_i)$ as the quadruplet associated with e_i.

Definition 11: For each different p-invariant set E_p in the lookup table $placeToInvariant$, we build a vertex v_i in the interaction graph $G_{interaction}$ and associate E_p (set of p-invariants) with the created node such that $Inv\text{-}G_{interaction}(v_i) = E_p$.

Definition 12: The support of an interaction vertex v_i is defined as the set of all the places p such that $C[p] \rightarrow Inv\text{-}G_{interaction}(v_i)$. In other words, the support of v_i is the set containing all the places associated with the value E_p in table $placeToInvariant$. This value is also equal to $Inv\text{-}G_{interaction}(v_i)$. We denote $||v_i||$ as the support of the vertex v_i. Unlike the support of a p-invariant in a Petri net, a place p can be present in the support of only one vertex of the interaction graph.

Example 5: For the Petri net N_1, vertices are created for the four distinct values E_p in the lookup table $placeToInvariant$ (Table 2). Table 4 shows the list of vertices v_i from the interaction graph representation of N_1 with their set $Inv\text{-}G_{interaction}(v_i)$ and their associated support.

Vertices v_i	p-invariants $Inv\text{-}G_{interaction}(v_i)$	Support $\|\|v_i\|\|$
v_1	$\{y_1\}$	$\{p_1\}$
v_2	$\{y_2\}$	$\{p_2\}$
v_3	$\{y_1, y_2\}$	$\{p_3\}$
v_4	$\{y_3\}$	$\{p_4, p_5\}$

Table 4: Interaction graph vertices, their associated p-invariant set and their support of the interaction graph created from the Petri net N_1.

After the creation of the vertices, the edges of the interaction graph are created. For the creation of the edges, each vertex is iteratively considered as a possible source vertex. The places in the support of the considered vertex are used as keys to access quadruplets in the $RFAP$ lookup table. Each quadruplet is then assessed: from the target place of a quadruplet, which is the second element of the quadruplet, the associated vertex is identified. This becomes the target vertex of the new edge. Unless the source vertex and the target vertex are the same (no loops are allowed in the interaction graph), an edge is created between these two vertices, and the quadruplet is associated with it. When an edge is added to the interaction graph, an entry is made in another lookup table identified as OE (for OrderedEdge). Each entry in the lookup table OE contains the step number (the fourth entry of the quadruplet) and the set of quadruplets created at this step during the exploration of the Petri net. The set of quadruplets for each step is Q_{step_i}.

Definition 13: An edge e exists from vertex v_a to vertex v_b in the interaction graph $G_{interaction}$ if there is a quadruplet $q = [p_{source}, p_{target}, t, step]$ in $RFAP$ such that p_{source} is contained in $||v_a||$ and p_{target} is contained in $||v_b||$. We associate q to the interaction graph edge e ($Tr\text{-}G_{interaction}(e) = q$).

Definition 14: OE denotes a lookup table such that $OE(key) = Q_{step_i}$. The value associated with each key *step* is a set of quadruplets created at this step.

Example 6: Five edges are added to the interaction graph of the Petri net N_1. They are illustrated in Figure 6. Each edge is associated with a quadruplet from Table 3. The source and target vertices of an

edge are determined from the source and target places of the quadruplet and the corresponding support of the vertices. Because the source and target places of the quadruplets $[p_4, p_5, t_2, 3]$ and $[p_5, p_4, t_3, 2]$ are related to a single interaction vertex (v_4), they are not converted into edges in the interaction graph. Table 5 presents an example of the lookup table OE with the remaining five quadruplets for the Petri net N_1.

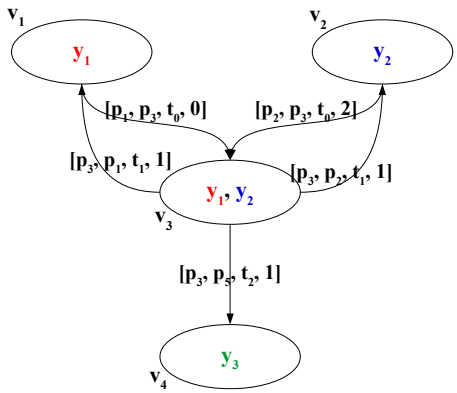

Figure 6: Interaction graph built from the Petri net N_1 after the execution of the first rule of the second phase with its vertices and their associated p-invariants, and its edges and their associated quadruplets.

Step	Quadruplets of the interaction graph edges
0	$[p_1,\ p_3,\ t_0,\ 0]$
1	$[p_3,\ p_1,\ t_1,\ 1]$, $[p_3,\ p_2,\ t_1,\ 1]$, $[p_3,\ p_5,\ t_2,\ 1]$
2	$[p_2,\ p_3,\ t_0,\ 2]$

Table 5: The lookup table OE for the running Petri net N_1, representing each step and the quadruplets of the associated interaction graph edges.

3.2.2. Removal of edges from the interaction graph with the signaling segments rule

The final objective of the transformation algorithm is to represent signaling pathways as an influence graph showing the path of the signal. In these cellular systems, most chemical reactions come with their reverse counterpart (e.g. activation and inactivation through phosphorylation and dephosphorylation). As the molecular signal travels from a source through different signaling pathways to one or more molecular targets, the initial perturbation is thought to convey the signal further downstream. When the reverse reactions occur, this likely corresponds to the system trying to return to its initial equilibrium (after activation often comes inactivation). To transform the interaction graph into an influence graph, edges corresponding to these reverse reactions that do not transmit the signal are identified and removed. In the algorithm, this pruning of the graph is done according to the signaling segments rule, using a history of which signaling segments are transducing the signal, from and to which p-invariants and at which step. Three data structures are put in place to track this signal transduction history. The first of these data structures is the record.

Definition 15: A `record` denotes a list of sets containing p-invariants. For each step of the exploration of the Petri net model, there is a set of p-invariants in the record. A `record` is used to store the sets of p-invariants that are reached at certain steps. The `record` is initialized with empty sets.

Example 7: For a Petri net model whose exploration takes n steps, the initial record is as follows:

`record` = [{p-invariants set at step 0}, {p-invariants set at step 1}, {p-invariants set at step 2}, ..., {p-invariants sets at step n}] = [$\{\}_0$, $\{\}_1$, $\{\}_2$, ..., $\{\}_n$]

The `record` data structure is used repeatedly in this rule of the algorithm. A `record` is associated with one signaling segment (see Definition 8) to form a pair that we identify as a `recorder`.

Definition 16: A `recorder` denotes a data structure pairing the signaling segment of a p-invariant subnetwork with a `record`.

Example 8: `recorder` = [signaling segment, `record`]

A final data structure is necessary for the execution of the signaling segment rule: the lookup table `invariantToRecorders` in which each recorder is associated with a p-invariant of the Petri net model. One p-invariant can be associated with multiple recorders.

Definition 17: The table `invariantToRecorders` is a multiple-value lookup table such that `invariantToRecorders`(key) = list of recorders. The value associated with each key p-invariant is a list of recorders.

Example 9: `invariantToRecorders` = $\big($(p-invariant$_1$, (recorder$_1$, recorder$_2$)), (p-invariant$_2$, (recorder$_3$)), ...$\big)$

The three data structures – `record`, `recorder` and `invariantToRecorders` – are used only to process the interaction graph within this rule and will not be used in later steps of the algorithm. In the Petri net N_1, these data structures are initialized as follows. There are three p-invariants y_1, y_2 and y_3 in this model, thus there are three entries in the table `invariantToRecorders`. Since the sets of signaling segments of these p-invariants subnets $SS_{N_{y_1}}$, $SS_{N_{y_2}}$ and $SS_{N_{y_3}}$ contain only one signaling segment each, there is only one `recorder` per p-invariant in the table. Finally, the `record` of each `recorder` is initialized with three empty sets since this Petri net was explored in three steps. Some of these records will be filled as the rule is applied and edges of the interaction graph are removed. We now explain this rule, first in generic terms and then through its application to the Petri net N_1 in Example 10.

When applying the signaling segments rule to an interaction graph, the graph edges are considered based on the exploration step. Thus, the edges at step 0 are first considered, then the edges at step 1, and so on. When an edge is evaluated, the p-invariants from the source place and from the target place of that edge are identified using the function `implicitConnectedInv` as defined in Algorithm 2.1. This function handles vertices associated with more than one p-invariant, which typically involves molecular complexes. These source and target p-invariants are used to access lists of recorders stored in the lookup table `invariantToRecorders`. The correct recorders within these lists are selected by verifying if the transition associated with the edge is present in the signaling segment of the recorder (see function `getRecorder` in Algorithm 2.1). The considered edge will be removed from the interaction graph if one of the source p-invariants is already present in the record of the target p-invariants. If this condition is met, all edges sharing the same source place and transition are also removed from the interaction graph. This indicates that the signal has already traveled along this signaling segment in one direction at a previous step, hence the edges associated with the reverse reactions are removed. Otherwise, the edge is kept, and the target p-invariants are added to the record of the recorder of the source p-invariants. In this manner, the recorders of the model p-invariants are gradually filled and used to test the eligibility of the edges at the remaining steps.

Iterating through the edges of the graph based on the exploration step is crucial in applying this rule. If the signal travels again on a signaling segment that was taken at an earlier step, the corresponding edge, along with any other edge having the same source place and transition (at the same step), is

removed from the interaction graph. This removal indicates that these interactions do not transduce the signal, but rather correspond to the system returning to its equilibrium. It is also important to note that this rule does not remove the longer loops created by edges that do not share the same signaling segment. These loops, like negative feedback mechanisms, are important for biological regulation and are thus preserved in the interaction graph.

Example 10: Let's apply the signaling segments rule to the Petri net N_1 and possibly remove certain edges of the interaction graph. The process is formally detailed in Algorithm 2.1. The resulting interaction graph is shown in Figure 7. The state of the lookup table `invariantToRecorders` after the application of the rule is shown in Table 6. A complete description of this process is available in the supplementary material.

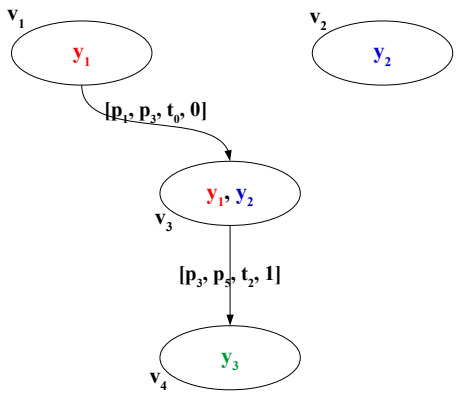

Figure 7: Interaction graph of the Petri net N_1 with the remaining edges and their associated quadruplet after the application of the signaling segments rule when the place p_1 is considered the signaling source of the model.

P-invariant	Recorder	
	Signaling segment	Record
y_1	$\{t_0, t_1\}$	$[\{y_2\}, \{\}, \{\}]$
y_2	$\{t_0, t_1\}$	$[\{\}, \{\}, \{\}]$
y_3	$\{t_2, t_3\}$	$[\{\}, \{\}, \{\}]$

Table 6: The lookup table `invariantToRecorders` for the Petri net N_1 after applying the signaling segments rule. The p-invariant y_2 is added to the `record` of the signaling segment $\{t_0, t_1\}$ of the p-invariant y_1 when the edge from v_1 to v_3 is considered. This means that the signal travels from y_1 to y_2 using this signaling segment. When edges at later steps between v_1 and v_3 and v_2 and v_3 are considered, they are removed from the interaction graph because the quadruplet transitions are in the same signaling segment.

3.2.3. Building the influence graph from the interaction graph

The final rule of the second phase of the algorithm transforms the interaction graph into an unannotated version of the influence graph. At this stage of the algorithm, influences of molecular species on others are inferred from molecular interactions. This rule processes molecular complexes to distinguish between direct and indirect interactions. For example, if a complex of three molecules is assembled through binding reactions in the model (e.g. a molecular complex formed of the p-invariants y_A, y_B and y_C), a subset or all the possible combinations formed by the three p-invariants are present in the interaction graph (the vertices y_Ay_B, y_Ay_C, y_By_C and $y_Ay_By_C$). This could lead to the creation of influence edges in one direction or the other between the three pairs of p-invariants ($y_A \rightarrow y_B$, $y_A \rightarrow y_C$

and $y_B \rightarrow y_C$, and their reverse). However, a direct molecular interaction between all three pairs of molecules forming the complex through binding domains is unlikely. In this situation, it is more probable that only one molecule can bind to the two other partners through distinct binding sites. These other two partners do not bind together on their own and thus should not have a direct influence on one another in the influence graph. In other words, their interaction is indirect. To distinguish between indirect interactions in a molecular complex and direct interactions through binding sites, this rule uses graph properties. In the end, direct interactions are preserved while redundant or indirect interactions are removed from the influence graph. As a result of this processing, the vertices of the influence graph have only one p-invariant associated with them, and arcs have a set of quadruplets. This influence graph will be annotated in the third phase of the algorithm.

An influence graph $G_{influence} = (V, E)$ consists of a finite set V of vertices and a finite set $E \subseteq V \times V$ of arcs. The arc $(v_1, v_2) \in E$ is a directed arc from vertex v_1 to vertex v_2, and means that v_1 has some influence over v_2. There can be only one arc between two vertices per direction. If we consider v a vertex of the influence graph, we denote $Inv\text{-}G_{influence}(v)$ the only p-invariant associated with v and $||v||$ the support of this p-invariant. If we consider e an arc of the influence graph, we denote $Tr\text{-}G_{influence}(e)$ the set of quadruplets associated with e. Each arc also has a type of influence. $I : E \rightarrow IT$ is a type function that associates an influence type to an arc, where IT is a finite set of influence types, $IT = \{it_1, it_2, ..., it_m\}$. The influence type of the edges of the influence graph will be assigned by a later transformation rule (subsection 3.3.3). In the interaction graph, a vertex can be associated with more than one p-invariant (the cardinality of the set $Inv\text{-}G_{interaction}(v_i)$ for any v_i is greater than or equal to one). However, a vertex in the influence graph is associated with only one p-invariant (the cardinality of the set $Inv\text{-}G_{influence}(v_j)$ for any v_j is equal to one). To create the influence graph, the edges from the interaction graph are processed. Since these edges can connect vertices associated with multiple p-invariants, this rule extracts the corresponding influence arcs between single p-invariants. We call the central concept of this transformation rule signal condensation. This is the reduction of interactions into direct molecular influences. Because only binding reactions can create complexes with multiple p-invariants, the condensation of signals is only needed for edges that are associated with binding reactions and not enzymatic reactions.

The transformation rule that processes the interaction graph to create the influence graph proceeds one exploration step at a time, executing five main processing steps as one iteration for each exploration step of the model starting at the step 0. The **first processing step** is to group interaction vertices and edges by the current exploration step to create an interaction subgraph.

The **second processing step** is to condense the signal in each vertex of the exploration step interaction subgraph with the previously identified signal condensation relationships (see the fourth step). There is no signal condensation relationship at the first iteration. Condensing the signal in each vertex of the subgraph is done by removing p-invariants that are codomain with another p-invariant (e.g. if in a condensation relationship, y_1 is the codomain of y_2, then in each vertex where y_1 and y_2 are present, remove y_1). The information is stored in a data structure as signal condensation relationships are detected following the conditions in Definition 18.

Definition 18: The signal from the vertex v_1 to the vertex v_2 (associated with p-invariants y_1 and y_2 respectively in the influence graph) is said to be condensed by v_2 under two conditions. First, the edge must not be associated with an enzymatic reaction. The second condition is if there is an edge between the two vertices in the interaction graph that are each associated with sets containing the p-invariants y_1 and y_2 where either source or target vertex contains only one of these p-invariants (the three possible combinations for $Inv\text{-}G_{interaction}(v_1)$ and $Inv\text{-}G_{interaction}(v_2)$ are $\{y_1\}$ and $\{y_2\}$, $\{y_1\}$ and $\{y_1, y_2\}$, and $\{y_1, y_2\}$ and $\{y_2\}$). A p-invariant that is the sole p-invariant of a vertex is called a core p-invariant. In the resulting condensation relationship from v_1 to v_2, y_1 becomes a codomain of y_2 and y_2 becomes a domain of y_1.

The **third processing step** extracts influence arcs from the interaction graph edges. It starts by decomposing the exploration step interaction subgraph into a set of its maximal bipartite components using the Bron-Kerbosch complete bipartition decomposition algorithm [37]. A bipartite component is a complete bipartite graph (Definition 3) and the set of all maximal complete bipartite components respects Definition 4. Each component is a subgraph with two sets of vertices: sources and targets.

Following the complete bipartition decomposition of the exploration step subgraph, the listed maximal components are analyzed one by one by going through the operations (a) to (e) to extract new influence arcs.

(a) Removing p-invariants from vertices at the second step because of a condensation relationship might cause two vertices to now have the same support. If such a situation is detected, the edge between these two vertices is removed from the component.

(b) Put in a set the p-invariants from the source (target) vertices that has only one p-invariant. These p-invariants are the core source (target) p-invariants. If present, remove the target p-invariants of the previous exploration step subgraph from this exploration step's target p-invariants.

(c) Remove the core source p-invariants from the target p-invariants and the core target p-invariants from the source p-invariants. If there is no p-invariant left in the remaining target p-invariants, this might indicate a modeling assumption that is not modeled explicitly. Send a request to the user to identify the correct interaction partner.

(d) In the sets of source and target p-invariants, for each partition keep only the sets with the lowest cardinality to keep the minimal covering sets of p-invariants for both partitions. If there are still more than one p-invariant each in the source and target sets, remove from either set the intersection between source and target sets.

(e) Influence arcs are then created (but not added to the influence graph yet) between all remaining sources and target p-invariants. The quadruplets from the initial interaction arcs are associated with the new influence arcs.

The **fourth processing step** of this rule identifies which influence arcs among those created at the precedent step are a signal condensation relationship and if a recursive association with previous relationships is necessary. Because they only have one target, arcs representing enzymatic reactions do not condense the signal. For the remaining arcs, a signal condensation relationship is set between the source p-invariant and its target: the source p-invariant becomes a codomain of the target p-invariant and the target p-invariant becomes a domain of the source p-invariant. For molecular complexes with more than two partners, condensation relationship must be established recursively. To decide if this recursion is necessary, it is verified if the source place of the arcs' quadruplets contains p-invariants that are already codomains of the source of the arc. When this condition is met, two recursive updates are performed: first, the other codomains of the source p-invariant become codomains of the target p-invariant and it becomes their domain; second, other domains of the target p-invariant become domains of the source p-invariant and it becomes their codomain. All these condensation relationships are used in the second processing step to condense signals in vertices in the next iterations of this procedure.

Finally, **the fifth processing step** is to add the new influence arcs from this exploration step to the influence graph, condensing and non-condensing arcs alike. The arcs' quadruplets are validated to remove pairs of quadruplets involving transitions forming trivial t-invariants. If the vertices of an arc are absent from the graph, they are created. If the two vertices of an arc exist and an influence arc is already between them in the graph, the quadruplets of the new arc are added to the quadruplets of the existing arc. Finally, the p-invariant targets of the new arcs are stored for the operation

3b of the next iteration. This completes the processing of the current exploration step subgraph. The processing of the subgraph for the next step will begin with probing each vertex for a signal condensation relationship: if in the same vertex, one p-invariant is the codomain of another, then the codomain p-invariant is removed from the vertex. These processing steps are performed on every subgraph. Establishing condensation relationships is the most important part of this rule. At each step, these relationships are used to remove some p-invariants of the vertices of the interaction graph, leaving only the p-invariants that have direct interactions, which then become influence arcs.

Example 11: Figure 8 presents five simple cases of interaction edges between source and target vertices converted into influence arcs with the five processing steps. In Figure 8a, there are two core p-invariants and the transformation results simply into the influence arc $y_1 \rightarrow y_2$. The following condensation relationship is established if this edge is not associated with an enzymatic reaction: y_1 becomes a codomain of y_2 and y_2 becomes a domain of y_1. In Figure 8b, y_1 is a core p-invariant of the source vertex because it is a single p-invariant. It is thus removed from the target vertex. This also results in the influence arc $y_1 \rightarrow y_2$. In Figure 8c, y_2 is a core p-invariant of the target vertex and is removed from source vertex. This results in the influence arc $y_1 \rightarrow y_2$. In Figure 8d, the two interaction edges are evaluated one after the other. In the first evaluation, the top two vertices are identical to Figure 8b and generate the influence arc $y_1 \rightarrow y_2$. In the evaluation of the second edge, the first step is to verify if the signal should be condensed using existing condensation relationships. Because y_1 has been identified as a codomain of y_2 at a previous step, the p-invariant y_1 is removed from the vertices. This results in the influence arc $y_2 \rightarrow y_3$. y_2 becomes a codomain of y_3 and y_3 becomes a domain of y_2. Through the recursive update, y_1 becomes a codomain of y_3. In Figure 8e, y_1 is a core p-invariant of the source vertex and is removed from the target vertex and two p-invariants remain. A request is sent to the user to validate the target: y_2, y_3 or both. One or two influence arcs will be created accordingly.

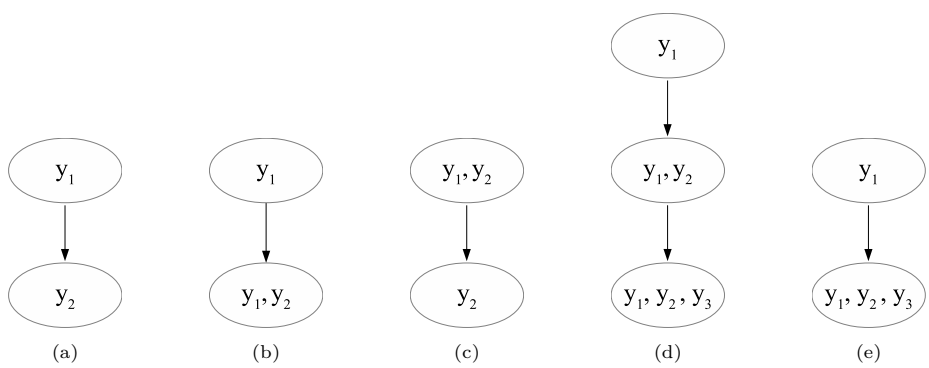

Figure 8: Source and target vertices with edges from an interaction graph to be converted into an influence graph. (a), (b) and (c) are converted into the influence arc $y_1 \rightarrow y_2$ because in each case, the core source vertex is y_1 and the core target vertex is y_2, (d) is converted into the influence arcs $y_1 \rightarrow y_2 \rightarrow y_3$ because y_3 is the only core target remaining for the second edge after the elimination of y_1 and y_2 due to a signal condensation relationship established by the first edge. In (e), because more than one p-invariant remains in the target vertex after analysis, the user is prompted to choose if an influence arc is established from y_1 to y_2, from y_1 to y_3 or both.

Example 12: To exemplify the rule for building the influence graph, we introduce a Petri net model more complex than N_1. For this example, we use the Petri net N_2 shown in Figure 9 and perform the first two phases of the algorithm to transform N_2 into its influence graph representation. This model represents the molecular binding of three molecules to form a complex. Molecule A is a ligand and can bind to molecule B, a membrane receptor, to form the complex AB. Molecule B can also bind to molecule C, a small switch-like protein, to form the complex BC. These bindings are not mutually exclusive and can happen in any order to form the trimeric complex ABC, a ligand-receptor-protein complex. Every binding reaction has its unbinding reverse counterpart. The formation of the trimer ABC leads to the activation of the switch-like protein in the form of C_{prime}. At the beginning of the preparatory phase, the p-invariant analysis on this model detects three p-invariants, y_A, y_B

and y_C for the three molecular types, and produces the lookup table *placeToInvariant* (Table 7). No pairs of p-invariants from the model are considered similar. The three p-invariant subnets N_{2A}, N_{2B} and N_{2C} are analyzed for signaling segments. Three signaling segments are identified: $SS_{N_{2A}} = \{t_0, t_2, t_3, t_4, t_7, t_8, t_9\}$, $SS_{N_{2B}} = \{t_0, t_1, t_2, t_3, t_4, t_6, t_7, t_8, t_9\}$, $SS_{N_{2C}} = \{t_1, t_2, t_3, t_4, t_5, t_6, t_8, t_9\}$. The Petri net model is explored from place p_0 (molecule A), identified as the source of the biological signal by the user. The exploration of the Petri net produces the lookup table $RFAP$ with the quadruplets that might become interaction edges (Table 8). The first rule of the second phase of the algorithm creates the interaction graph shown in Figure 10: six vertices are created for the different sets E_p from the lookup table *placeToInvariant* and eighteen edges connect the vertices, listed with their associated quadruplet in Table 10. No edge was created for the quadruplet $[p_6, p_4, t_5, 2]$ since its source and target places are associated with the same E_p: y_C. This rule also generates the lookup table OE (Table 9). The next rule uses signaling segments to eliminate some edges from the interaction graph. Eleven edges are removed (listed in red in the Table 10), notably every edge from the exploration step 2. The resulting graph is shown in Figure 11.

To conclude the second phase of the algorithm, the influence graph is built one exploration step at a time. For step 0, a subgraph is extracted. It contains the three vertices and the two edges associated with step 0 in OE: A $\rightarrow$ AB and A $\rightarrow$ ABC. (processing step 1). At this first iteration, no signal condensation relationship exists yet, so there is no signal to condense (processing step 2). This subgraph is a maximally bipartite component by itself (processing step 3). The supports of the three vertices are all different, so no edge has to be removed (step 3a). The p-invariant A is identified as a core source p-invariant, and there is no core target p-invariant since there is no set with only one p-invariant in the target vertices AB and ABC (step 3b). The core p-invariant is removed from the other partition vertices: A is removed from the vertices AB and ABC, which become B and BC (step 3c). A is identified as the source, and B, being the set with the lowest cardinality, is identified as the target; since source and target now have only one p-invariant, no further processing is needed (step 3d). This result shows that A interacts directly with B but indirectly with C since C is never in complex only with A (thus without B). An influence arc between vertices A and B is created and the quadruplets $[p_0, p_5, t_2, 0]$ and $[p_0, p_2, t_0, 0]$ from the two interaction edges are added to this new arc. This arc is identified as a condensing one, and a condensation relationship is established: A is a codomain of B and B is a domain of A (processing step 4). The two new vertices A and B and their connecting arc are then added to the influence graph (processing step 5).

For exploration step 1, another subgraph is extracted: it contains the vertices AB, ABC and C and their five connecting arcs (processing step 1). With the previously established signal condensation relationship (A is a codomain of B), the signal is condensed in the vertices of this subgraph: the p-invariants A is removed from the two vertices in which the p-invariant B is also present (processing step 2). This subgraph has two maximal bipartite components: the first component is B $\rightarrow$ BC and the second component has three vertices and the four edges BC $\rightarrow$ B (twice), BC $\rightarrow$ C (twice) (processing step 3). In the first component, all the vertices' supports are different, so no edge has to be removed (step 3a). The core source and target p-invariants are B and C respectively (step 3b) and no further processing occurs for the steps 3c and 3d. An influence arc is created between vertices B and C with the quadruplet $[p_2, p_5, t_3, 1]$ (step 3e). In the second maximal bipartite component, all the supports of the vertices are also different, so no edge has to be removed (step 3a). There is no core source p-invariant in BC, but C is a core target p-invariant as B is removed since it is the target of the iteration of the previous step (step 3b). The core target p-invariant C is removed from the source p-invariants, leaving B (step 3c). As a result, B is the sole source p-invariant and C is the sole target p-invariant (step 3d). An influence arc is created between vertices B and C with the two quadruplets $[p_5, p_6, t_4, 1]$ and $[p_5, p_4, t_8, 1]$ associated with the edges linking these vertices in the subgraph (step 3e). At processing step 4, the two new influence arcs for the exploration step 1 are not enzymatic reactions and thus condense the signal, and a condensation relationship is established: B is a codomain of C and C is a domain of B. Since B already has a codomain, another condensation relationship between A and C is

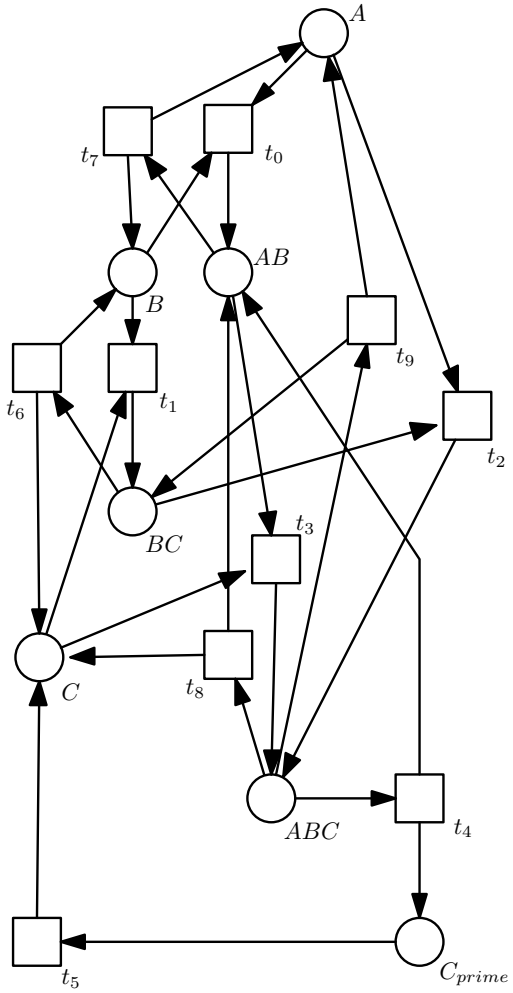

Figure 9: The Petri net N_2 represents several binding reactions creating the trimer with the molecules A, B and C. Once in the trimer ABC, the molecule C is activated in the form of Cprime through transition t_4. In this signaling pathway, the source of the signal is molecule A (place A).

Places	E_p
$p_0 : A$	y_A
$p_1 : B$	y_B
$p_2 : AB$	y_A, y_B
$p_3 : BC$	y_B, y_C
$p_4 : C$	y_C
$p_5 : ABC$	y_A, y_B, y_C
$p_6 : C_{prime}$	y_C

Table 7: The lookup table *placeToInvariant* after the p-invariants analysis, which associates each place of the Petri net N_2 to the set of p-invariants the place belongs to.

Places	Quadruplets
p_0	$[p_0, p_2, t_0, 0], [p_0, p_5, t_2, 0]$
p_1	$[p_1, p_3, t_1, 2], [p_1, p_2, t_0, 2]$
p_2	$[p_2, p_5, t_3, 1], [p_2, p_1, t_7, 1], [p_2, p_0, t_7, 1]$
p_3	$[p_3, p_5, t_2, 2], [p_3, p_1, t_6, 2], [p_3, p_4, t_6, 2]$
p_4	$[p_4, p_5, t_3, 2], [p_4, p_3, t_1, 2]$
p_5	$[p_5, p_4, t_8, 1], [p_5, p_3, t_9, 1], [p_5, p_2, t_4, 1],$ $[p_5, p_2, t_8, 1], [p_5, p_6, t_4, 1], [p_5, p_0, t_9, 1]$
p_6	$[p_6, p_4, t_5, 2]$

Table 8: The lookup table *RFAP* after the exploration of the Petri net N_2 from the source place.

Step	Quadruplets
0	$[[p_0, p_2, t_0, 0], [p_0, p_5, t_2, 0]]$
1	$[[p_5, p_4, t_8, 1], [p_5, p_3, t_9, 1], [p_5, p_2, t_4, 1],$ $[p_2, p_5, t_3, 1], [p_5, p_2, t_8, 1], [p_2, p_1, t_7, 1],$ $[p_5, p_6, t_4, 1], [p_5, p_0, t_9, 1], [p_2, p_0, t_7, 1]]$
2	$[[p_4, p_5, t_3, 2], [p_1, p_3, t_1, 2], [p_1, p_2, t_0, 2],$ $[p_3, p_5, t_2, 2], [p_4, p_3, t_1, 2], [p_3, p_1, t_6, 2],$ $[p_3, p_4, t_6, 2]]$

Table 9: The lookup table *OE* for the Petri net N_2, representing each step and their associated quadruplets. Each quadruplet corresponds to an egde in the interaction graph shown in Figure 10.

recursively established: A is a codomain of C and C is a domain of A. At the processing step 5, the two new arcs are candidates to the influence graph: the addition of the first arc causes the creation of the vertex C in the influence graph; for the second arc, an arc between the vertices B and C now exists and consequently, its quadruplets are tentatively added to the existing arc. Since the transitions t_3 and t_8 are the support of a trivial t-invariant in the Petri net, the two quadruplets containing them are discarded and only the quadruplet $[p_5, p_6, t_4, 1]$ remains. There is no more subgraph to analyze since every edge from exploration step 2 has been previously removed by the signaling segments rule. The resulting influence graph for the Petri net N_2 is shown in Figure 12. Table 11 details the influence arcs and their associated quadruplets. It is interesting to note that the transitions of the quadruplets of the arc between vertices A and B are t_0 and t_2, which correspond to the activation of B by the binding of A, and that the transition of the quadruplet of the arc between vertices B and C is t_4, which correspond to the activation of C following the formation of the trimer ABC. These transitions are key to the biochemical process modeled by the Petri net N_2.

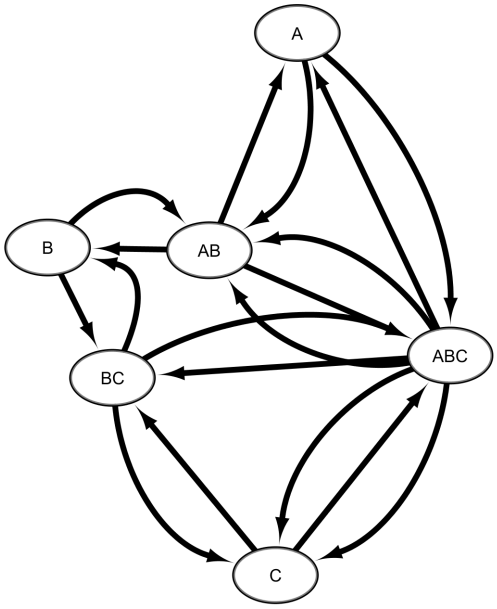

Figure 10: Interaction graph built from the Petri Net N_2 after the execution of the first rule of the second phase with its vertices and their associated p-invariants, and its edges, which associated quadruplets are listed in Table 10.

Source vertex	Target vertex	Quadruplets
{A}	{A, B}	$[p_0, p_2, t_0, 0]$
{A}	{A, B, C}	$[p_0, p_5, t_2, 0]$
{B}	{A, B}	$[p_1, p_2, t_0, 2]$
{B}	{B, C}	$[p_1, p_3, t_1, 2]$
{C}	{A, B, C}	$[p_4, p_5, t_3, 2]$
{C}	{A, B}	$[p_4, p_3, t_1, 2]$
{A, B}	{A}	$[p_2, p_0, t_7, 1]$
{A, B}	{B}	$[p_2, p_1, t_7, 1]$
{A, B}	{A, B, C}	$[p_2, p_5, t_3, 1]$
{B, C}	{B}	$[p_3, p_1, t_6, 2]$
{B, C}	{C}	$[p_3, p_4, t_6, 2]$
{B, C}	{A, B, C}	$[p_3, p_5, t_2, 2]$
{A, B, C}	{A}	$[p_5, p_0, t_9, 1]$
{A, B, C}	{A, B}	$[p_5, p_2, t_8, 1]$
{A, B, C}	{A, B}	$[p_5, p_4, t_4, 1]$
{A, B, C}	{B, C}	$[p_5, p_3, t_9, 1]$
{A, B, C}	{C}	$[p_5, p_6, t_4, 1]$
{A, B, C}	{C}	$[p_5, p_4, t_8, 1]$

Table 10: List of edges in the interaction graph for the Petri Net N_2, before the signaling segments rule is applied and after. Every edge marked in red is removed by the rule.

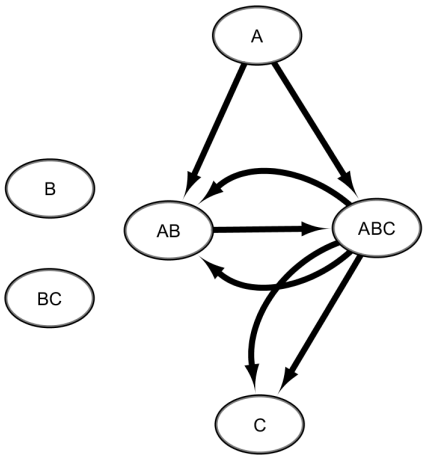

Figure 11: Interaction graph for the Petri Net N_2 with the remaining edges after applying the signaling segments rule when the place A is considered the source of the signal.

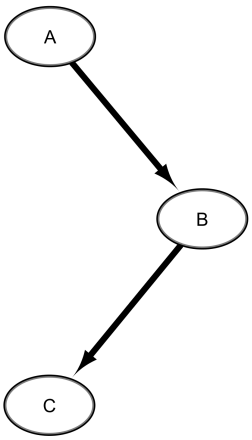

Figure 12: Influence graph created for the Petri Net N_2 after processing the interaction graph shown in Figure 11 with the third rule of the second phase. The quadruplets of the graph arcs are listed in Table 11.

The second phase of the transformation algorithm ends with the creation of the influence graph, which will be annotated in the next phase. The three transformation rules of this phase are formally described in Algorithm 2, with the removal of interaction edges by the signaling segments rule detailed in Algorithm 2.1 and the building of the influence graph detailed in Algorithm 2.2 where the instructions for the processing steps 1 to 5 are clearly indicated.

Source Vertex	Target Vertex	Quadruplets
A	B	$\big[[p_0, p_5, t_2, 0], [p_0, p_2, t_0, 0]\big]$
B	C	$\big[[p_5, p_6, t_4, 1]\big]$

Table 11: The arcs of the influence graph (Figure 12) and their associated quadruplets, for the Petri Net N_2.

3.3. Phase III: Annotating the influence graph and determining the type of influence of the arcs

In the second phase of the transformation algorithm, the structural properties of a Petri net model and complementary modeling information were used to build the model's representation as an influence graph. In the final phase, further structural information is used to determine the type of influence for the arcs of the graph. Three transformation rules are necessary to do so. First, places that participate in the transmission of the signal downstream in the signaling pathway are identified as active molecular forms in the model. These places are labeled signaling places. Similarly, transitions that transmit the signal by activating or inactivating a downstream molecule are identified by the second rule. Finally, this information allows for the assignment of an influence type (activation or inhibition) to the arcs of the influence graph.

3.3.1. Detecting signaling places and associating them with the vertices of the influence graph

After creating vertices and connecting them with arcs, the influence graph of a signaling model can now be annotated with additional dynamic information from the model. The different configurations of a molecular species, which correspond to the different places of the Petri net, can be associated with either the active or the inactive state of the species. When linked to the active state, the places are detected by this rule as signaling places, otherwise they are non-signaling places. Consequently, the support of every p-invariant of the Petri net model is divided into two subsets: the signaling and non-signaling places.

To identify the places that correspond to the active state, we propose two conditions in the following criteria: the signaling places of a vertex (by default, these places are in the support of this vertex) are either a source place in the quadruplet of an arc connecting this vertex to a target vertex or a target place in a similar quadruplet. In this latter condition, the places must also be in the support of the target vertex. This criterion is formally defined in definition 19. For example, the place corresponding to an enzyme that catalyzes a reaction is detected as a signaling place according to the first condition of the criteria. Another example is the activation of species B by species A through the binding of two molecules. The place associated with molecule A is detected as a signaling place according to the first condition, and the place associated with molecular complex AB is detected as a signaling place according to the second condition. In signaling models, these two signal transduction mechanisms are the most common. A less frequent mechanism – an active biochemical signal causing the unbinding of a complex – is not covered by this definition and requires a specific operation.

Definition 19: Let v_a and v_b be two vertices in an influence graph and $e(v_a, v_b)$ an arc from v_a to v_b. The sets $\|v_a\|$ and $\|v_b\|$ are the supports of v_a and v_b, respectively. Let p be a Petri net place where $p \in \|v_a\|$. The place p is considered as signaling for the vertex v_a if $\exists$ quadruplet q_1 $[p, p_{target}, t, step]$ such as $q_1 \in Tr\text{-}G_{influence}(e)$ or if $\exists$ quadruplet q_2 $[p_{source}, p, t, step]$ such as $q_2 \in Tr\text{-}G_{influence}(e)$ and $p \in \|v_b\|$.

This definition to detect the active forms of a signaling molecular species relies on the connectivity of a vertex to its targets in the influence graph. As a result, it cannot be applied to the vertices without any target, such as the vertices that are leaves in a graph. The first operation of this rule is thus to find the leaves of the influence graph. Then a verification of the edges connecting the leaves to their

```
/* Phase II: Building the influence graph from the interaction graph */
input  : The lookup table placeToInvariant, the list containing all the sets SS_{N_{y_i}} and the lookup
         table RFAP.
output: An influence graph G_influence.
/* Build interaction graph (3.2.1) */
/* Create interaction graph vertices */
M_invToVertex := equivalence map between the values of table placeToInvariant (sets of p-invariants)
  and interaction vertices;
M_placeToVertex := equivalence map between the keys of table placeToInvariant (Petri net places) and
  interaction vertices;
G_interaction := interaction graph containing vertices and edges;
foreach couple (place, invSet) in the lookup table C do
    if M_invToVertex[invSet] doesn't exist then
        Add vertex v to interaction graph G_interaction;
        M_invToVertex: [invSet → v];
    end
    else
        v ← M_invToVertex[invSet];
    end
    M_placeToVertex : [place → v];
end
/* Add arcs between interaction graph vertices */
foreach vertex v_S of G_interaction do
    foreach place p in ||v_S|| do
        foreach quadruplet [p_source, p_target, t, step] of RFAP[p] do
            Vertex v_T := M_placeToVertex[target];
            if v_S ≠ v_T then
                Add edge e from v_S to v_T to interaction graph G_interaction;
                OE : [step → e];
            end
        end
    end
end
/* Remove edges from the interaction graph with the signaling segments rule (3.2.2) */
apply the signaling segments rule (Algorithm 2.1);
/* Build the influence graph from the interaction graph (3.2.3) */
apply the building the influence graph rule (Algorithm 2.2);
```

Algorithm 2: Building the influence graph from the interaction graph (phase II)

source vertices is performed. Leaves are signaling endpoints of the modeled pathways, however leaves in the influence graph so far might be covalent inhibitors in some models. Covalent inhibitors act as buffers for other activated signaling molecules. In this case, the correct biochemical influence is from the inhibitor to the inhibited molecule, and the user is prompted to provide this information, which is used to correct this edge and its quadruplets if necessary.

The second operation of this rule is to identify the signaling places of each vertex with the general criteria of Definition 19. Thirdly, five specific situations are detected and processed. For leaf vertices, the user is prompted to identify the signaling places among the vertex support. When the signal causes the unbinding of a complex (a situation detected by an edge being associated with a quadruplet in which a transition has one preplace and two or more postplaces), the user is prompted to identify the signaling places of the source vertex of this edge. If for a vertex every place is signaling or every place

```
/* Algorithm for removing interaction edges with the signaling segments rule (3.2.2) */
Input  : Interaction graph G_interaction, the lookup table placeToInvariant, the list containing all
         the sets SS_{N_{y_i}} and the lookup table OE
Output: Interaction graph G_interaction after the removal of indirect interaction edges
record:= list of sets of p-invariants with a size equal to the number of steps;
recorder:= a couple containing a signaling segment SS and a record;
invariantToRecorders:= a lookup table associating a p-invariant to several recorder;
foreach exploration step s do
    foreach edge e (and associated quadruplet [p_source, p_target, t, step]) in OE(s) do
        sources ← placeToInvariant(p_source) (the set of p-invariants of the source place of e);
        targets ← placeToInvariant(p_target) (the set of p-invariants of the target place of e);
        implicitSources ← implicitConnectedInv(sources, targets);
        implicitTargets ← implicitConnectedInv(targets, sources);
        if (registerAndVerify (implicitSources, implicitTargets, e, s) == false) then
            remove from G_interaction all edges sharing the same p_source and transition as e;
        end
    end
end
Function implicitConnectedInv(invariants1, invariants2)
    if (invariants1 == invariants2 OR invariant2 ⊂ invariant1) then
        return invariants1;
    end
    else
        return invariants1 - invariants2;
    end
Function registerAndVerify(implicitSources, implicitTargets, edge, step)
    allowedSignal ← False;
    foreach sInv in implicitSources do
        foreach tInv in implicitTargets do
            targetRecorder(signalingSegment, record) ← getRecorder(tInv, edge);
            if (targetRecorder is empty) then
                allowedSignal ← True;
            end
            else if ( sInv ∉ record of targetRecorder) then
                allowedSignal ← True;
                sourceRecorder ← getRecorder(sInv, edge);
                add tInv at the step^th set of the record of sourceRecorder;
            end
        end
    end
    return allowedSignal;
Function getRecorder(invariant, edge)
    recorders ← invariantToRecorders [invariant];
    foreach recorder (SS, record) in recorders do
        if ∃t ∈ SS | t ∈ edge(p_source, p_target, t, step) then
            return recorder;
        end
    end
    return empty set;
```

Algorithm 2.1: Algorithm for removing interaction edges with the signaling segments rule

```
/* Algorithm for building the influence graph (3.2.3)                                  */
Input  : Interaction graph G_interaction
Output: Influence graph G_influence
targetVerticesFromPreviousIteration:= set of the influence graph vertices that are the targets of the arcs
  from the previous iteration;
signalingCondensationRelationships:= data structure to store the signaling condensation relationships of
  the interaction graph; the structure contains the two multivalue maps coDomains and domains;
foreach exploration step s do
    subgraph ← generate interaction subgraph at step s from G_interaction ;          /* step 1 */
    subgraph ← removeIndirectRelationshipsFromSubgraph(subgraph) ;                   /* step 2 */
    arcs ← createInfluenceArcs(subgraph) ;                                           /* step 3 */
    foreach arc in arcs do                                                           /* step 4 */
        if arc has no quadruplet associated with an enzymatic reaction then
            setSignalingCondensationRelationship(Inv-G_influence(v_target),
              Inv-G_influence(v_source), arc)
        end
    end
    connectArcsInInfluenceGraph(arcs) ;                                              /* step 5 */
    targetVerticesFromPreviousIteration ← empty set and put in the target vertices of arcs for this
      iteration;
end
Function removeIndirectRelationshipsFromSubgraph(subgraph)
    foreach vertex v in subgraph do
        coDomainsList ← retrieve all the p-invariants that are associated with a p-invariant of v in
          coDomains;
        remove the p-invariants that are in coDomainsList from v;
    end
```

Algorithm 2.2: Algorithm for building the influence graph.

is non-signaling, the user is prompted to choose the signaling places manually. This situation occurs when the inactive form of a molecular species can signal to another downstream species at a basal level of activity. Finally, all the places of the vertex that is the signaling source of the model are labeled as signaling places.

When the vertices of the influence graph have been processed by this rule, each vertex is associated with a set of signaling places, which is a subset of its support. The remaining places are considered non-signaling.

3.3.2. Associating signaling transitions to influence arcs

During the construction of the influence graph in rule 3.2.3, one or multiple quadruplets are associated to each influence arc of the graph. Not all of these quadruplets contain a transition that conveys a biological signal of activation or inhibition. This rule will identify the quadruplets containing a transition that corresponds to the activation or inactivation of a downstream molecule and remove the others.

Definition 20: Let v_a and v_b be two vertices of $G_{influence}$ and $e(v_a\ ,v_b)$ the influence arc from v_a to v_b. Let $[p_{source}, p_{target}, t, step]$ be a quadruplet q such as $q \in Tr\text{-}G_{influence}(e)$. If $p_{source} \notin$ signaling places of v_a and neither $p_{target} \in$ signaling places of v_b nor there is no preplace of t ($^{\bullet}t$) $\in$ signaling places of v_b, then q is removed from $Tr\text{-}G_{influence}(e)$.

```
20 Function createInfluenceArcs(subgraph)
21     arcs:= set that will contain the influence arcs created;
22     find all the maximal bipartite components of subgraph by executing the Bron-Kerbosh algorithm;
23     foreach maximal bipartite component in subgraph do
           // step 3a
24         iterate through the edges of component and remove the edges that have identical source and
             target;
           // step 3b
25         coreSourceInvariants ← iterate through the source vertices of component and return in a single
             set the p-invariants of the vertices associated with a single p-invariant;
26         coreTargetInvariants ← iterate through the target vertices of component and return in a single
             set the p-invariants of the vertices associated with a single p-invariant and which are not in
             targetVerticesFromPreviousIteration;
           // step 3c
27         sourcesWithoutCoreTargetsInvariants ← iterate through the source vertices of component,
             remove coreTargetInvariants from the vertices p-invariants and return the sets of remaining
             p-invariants as a set of sets;
28         targetsWithoutCoreSourcesInvariants ← iterate through the target vertices of component,
             remove coreSourceInvariants from the vertices p-invariants and return the sets of remaining
             p-invariants as a set of sets. If no p-invariant remains, ask the user for the correct interaction
             molecule within the molecular complex;
           // step 3d
29         if (sourcesWithoutCoreTargetsInvariants ≠ ∅ AND targetsWithoutCoreSourcesInvariants ≠ ∅)
             then
30             sources ← create set containing all the sets of p-invariants in
                 sourcesWithoutCoreTargetsInvariants sharing the lowest cardinality;
31             targets ← create set containing all the sets of p-invariants in
                 targetsWithoutCoreSourcesInvariants sharing the lowest cardinality;
32             if (|sources| > 1) then
33                 sources ← sources − sources ∩ targets;
34             end
35             if (|targets| > 1) then
36                 targets ← targets − sources ∩ targets;
37             end
               // step 3e
38             if (sources ≠ ∅ AND targets ≠ ∅) then
39                 put in arcs every arc corresponding to a pair of sources and targets with their
                     associated quadruplets from the subgraph edges (source and target must be different,
                     also a quadruplet will be discarded if its source place (or target place) is not in the
                     support of the source vertex (or the target vertex))
40             end
41         end
42     end
43     return arcs
```

Algorithm 2.2: Algorithm for building the influence graph. (continued)

This definition detects the following two conditions: if the source place of a quadruplet is a signaling place of the source vertex, or if the target place of the same quadruplet or a preplace of the transition is a signaling place of the target vertex. In other words, this corresponds to molecular reactions in which an active molecular species activates or deactivates another one. The algorithm iterates over every quadruplet of the arcs and applies these conditions. After the execution of this rule, the arcs of the influence graph are associated only with quadruplets that can represent either a biological activation or an inhibition. The other quadruplet or discarded. The next rule will identify the type of influence and label the arcs accordingly.

```
44 Function setSignalingCondensationRelationship(invariant_target, invariant_source, arc)
45     add (invariant_target, invariant_source) to coDomains;
46     add (invariant_source, invariant_target) to domains;
47     if ∃ invariant in C(p_source) ∈ coDomains (invariant_source) where p_source is in one of the
         quadruplets of arc then
48         if domains contains the key invariant_target then
49             foreach value x associated with invariant_target in domains do
50                 setSignalingCondensationRelationship (x, invariant_source);
51             end
52         end
53         if coDomains contains the key invariant_source then
54             foreach value y associated with invariant_source in coDomains do
55                 setSignalingCondensationRelationship (invariant_target, y);
56             end
57         end
58     end
59 Function connectArcsInInfluenceGraph(arcs)
60     foreach arc in arcs do
61         if the two vertices of arc v_source and v_target are not in G_influence, add them;
62         if no arc exists already between these vertices, add arc to G_influence; otherwise merge the
             quadruplets from the new arc to the quadruplets of the existing arc between the same
             vertices;
63         remove quadruplets in merged arc if some of their transitions form a trivial t-invariant in Petri
             net N;
64     end
```

Algorithm 2.2: Algorithm for building the influence graph. (continued)

3.3.3. Determining the type of the arcs of the influence graph

In an influence graph, the arcs can have a type. So far in the transformation algorithm, no influence type has been assigned to the arcs of the graph built from the biological signaling model. As a biochemical signal is transduced in a cell through molecular reactions, molecules are activated or deactivated through binding/unbinding and enzymatic reactions. In a previous rule (Section 3.3.1), places were identified as signaling or non-signaling places, which can also be construed as on and off states. Consequently, an activation influence should turn on a molecular species by switching some places from non-signaling to signaling and an inhibitory influence should do the opposite.

Definition 21: Let v_a and v_b be two vertices of $G_{influence}$ and $e(v_a,v_b)$ the influence arc from v_a to v_b. The type of arc e is inhibitory if $\exists$ a quadruplet q [p_{source}, p_{target}, t, step] such as $q \in Tr\text{-}G_{influence}(e)$ in which p_{target} is a non-signaling place of $||v_b||$ (the support set of the p-invariant associated to v_b) and the set of pre-places $\bullet t$ except p_{source} contains only signaling places of $||v_b||$.

In the algorithm, every arc is initially labeled as an activation arc in the influence graph. Then, the algorithm iterates over each arc edge and tests the condition in Definition 21, which verifies if the state of a molecular species is switched from signaling places to non-signaling through the transition of at least one quadruplet in $Tr\text{-}G_{influence}(e)$. If the condition is fulfilled, then the type of the arc is changed to inhibitory. At the end of this rule, the transformation from a Petri net biological model to its annotated representation as an influence graph is complete.

The algorithm for the three rules of this phase for the annotation of the influence graph is detailed in Algorithm 3. In the next section, we present an example of the creation of an influence graph from a Petri net biological model through the three phases of the transformation algorithm.

```
/* Phase III: Annotating the influence graph                                  */
input  : The Petri net N and the unannotated influence graph G_influence.
output: The annotated influence graph G_influence.
/* Detecting signaling places for each p-invariant (3.3.1)                    */
detect the vertices v_leaf that are leaves in G_influence;
foreach edge e(v, v_leaf) that is not associated to enzymatic reactions do
    prompt the user to choose which vertex between v and v_leaf is the effector of their interaction. If
      v_leaf is designated the effector, then e(v, v_leaf) is removed and e(v_leaf, v) with corrected
      quadruplets is added instead in G_influence;
end
detect the vertices v_leaf that are still leaves in G_influence after possible modifications;
foreach vertex v in G_influence do
    foreach edge e(v, v_target) in G_influence do
        foreach quadruplet [p_source, p_target, t, step] associated to e do
            add p_source to the set of signaling places of v;
            if p_target ∈ ||v|| then
                add p_target to the set of signaling places of v;
            end
        end
    end
end
foreach v_leaf in G_influence do
    prompt the user to identify the signaling places of v_leaf;
end
foreach edge e(v_1, v_2) in G_influence do
    foreach quadruplet [p_source, p_target, t, step] associated to e do
        if t has one preplace and two postplaces or more then
            prompt the user to identify the signaling places of v_1;
        end
    end
end
foreach v in G_influence do
    if all or none of the places of the support of v are signaling places then
        prompt the user to identify the signaling places of v;
    end
    else if v is the source of the signal then
        set all the places of the support of v as signaling places;
    end
end
all the places that are not signaling places in the support of a vertex are labeled as non-signaling
  places;
```

Algorithm 3: Annotating the influence graph

4. Example of the execution of the algorithm: transformation of the Petri net model of the GPCR-PKA-MAPK signaling network into an annotated influence graph

In this section, we transform the Petri net representation of the differential equations model of the signaling pathway from the beta-adrenergic receptor (BAR) to the kinase MAPK1,2 through the cAMP/PKA/B-Raf/MAPK1,2 network in neurons [34] into an annotated influence graph using the transformation algorithm presented in this paper. This model contains only mass-action reactions and one-step enzymatic reactions. This transformation will highlight the signaling flow in the model and its regulatory mechanisms.

```
/* Associating signaling transitions to influence arcs (3.3.2)                    */
foreach arc e(v_source,v_target) in G_influence do
    foreach quadruplet [p_source, p_target, t, step] associated to e do
        if ( (p_source ∉ signaling places of the v_source) AND ((p_target ∉ signaling places of v_target) OR
          (•transition ∩ signaling places of v_target = ∅)) then
            remove quadruplet from arc e;
        end
    end
end
/* Determining the influence type of the arcs (3.3.3)                             */
foreach arc e(v_source, v_target) in G_influence do
    if flagAsInhibitoryIfOtherSourcesOfTransitionShowDeactivation(e) then
        set type of arc e as an inhibitory in G_influence;
    end
end
Function flagAsInhibitoryIfOtherSourcesOfTransitionShowDeactivation(arc)
    foreach quadruplet [p_source, p_target, t, step] contained in arc do
        otherSourcesOfTransition = set of the places in •t except p_source;
        if p_target is a non-signaling place of v_target AND otherSourcesOfTransition are all signaling
          places of v_target then
            return true;
        end
    end
```

Algorithm 3: Annotating the influence graph (continued)

The agonist that activates the G-protein-coupled receptor of this network is isoproterenol, a molecular analog of epinephrine. This receptor can bind to a G protein to form a molecular complex. In the complex, the presence of the ligand activates the G protein, a heterotrimer in itself, and the alpha subunit ($G_{\alpha s}$) that is now bound to GTP instead of GDP is separated from the beta/gamma subunits ($G_{\beta\gamma}$). The hydrolysis of GTP to GDP enables the return of the inactivated alpha subunit back into the complex with the beta/gamma subunit. When the separated active $G_{\alpha s}$ binds to the enzyme adenylyl cyclase, it increases the enzyme conversion of adenosine triphosphate (ATP) into the second messenger cyclic adenosine monophosphate (cAMP). Once separated from the alpha subunit, $G_{\beta\gamma}$ can bind to a G-protein-coupled receptor kinase (GRK), an enzyme that can phosphorylate the receptor, thus regulating the receptor sensitivity through inhibition.

The two regulatory subunits of protein kinase A (PKA) together have four binding sites for cAMP. Once the four sites are occupied by the second messenger, the catalytic subunits of PKA are activated and free to phosphorylate the targets of this enzyme. A first target of PKA is the kinase B-Raf, which activates the MEK-MAPK cascade. A second target is the protein tyrosine phosphatase (PTP), which deactivates MAPK through dephosphorylation. The last target of PKA is the phosphodiesterase PDE4 which catalyzes the hydrolysis of cAMP to AMP. As a result of all these interactions, there are three regulatory network motifs in this signaling pathway: a negative feedback loop between BAR, $G_{\beta\gamma}$ and GRK; a second negative feedback loop formed by the reactions between cAMP, PKA and PDE4; and a coherent feedforward loop with PKA as its source, MAPK as its target and B-Raf/MEK/MAPK and PTP being the two paths linking the two molecular species.

Figure 13 shows the Petri net N_{GPCR} of this reaction-based model. It has 33 places and 43 transitions. There are only two types of reaction in this model: binding reactions and enzymatic reactions. Read arcs connect enzyme places and their reaction transitions. We now apply the three phases of the transformation algorithm and present the intermediate data structures and graphs, and

in the end the annotated influence graph.

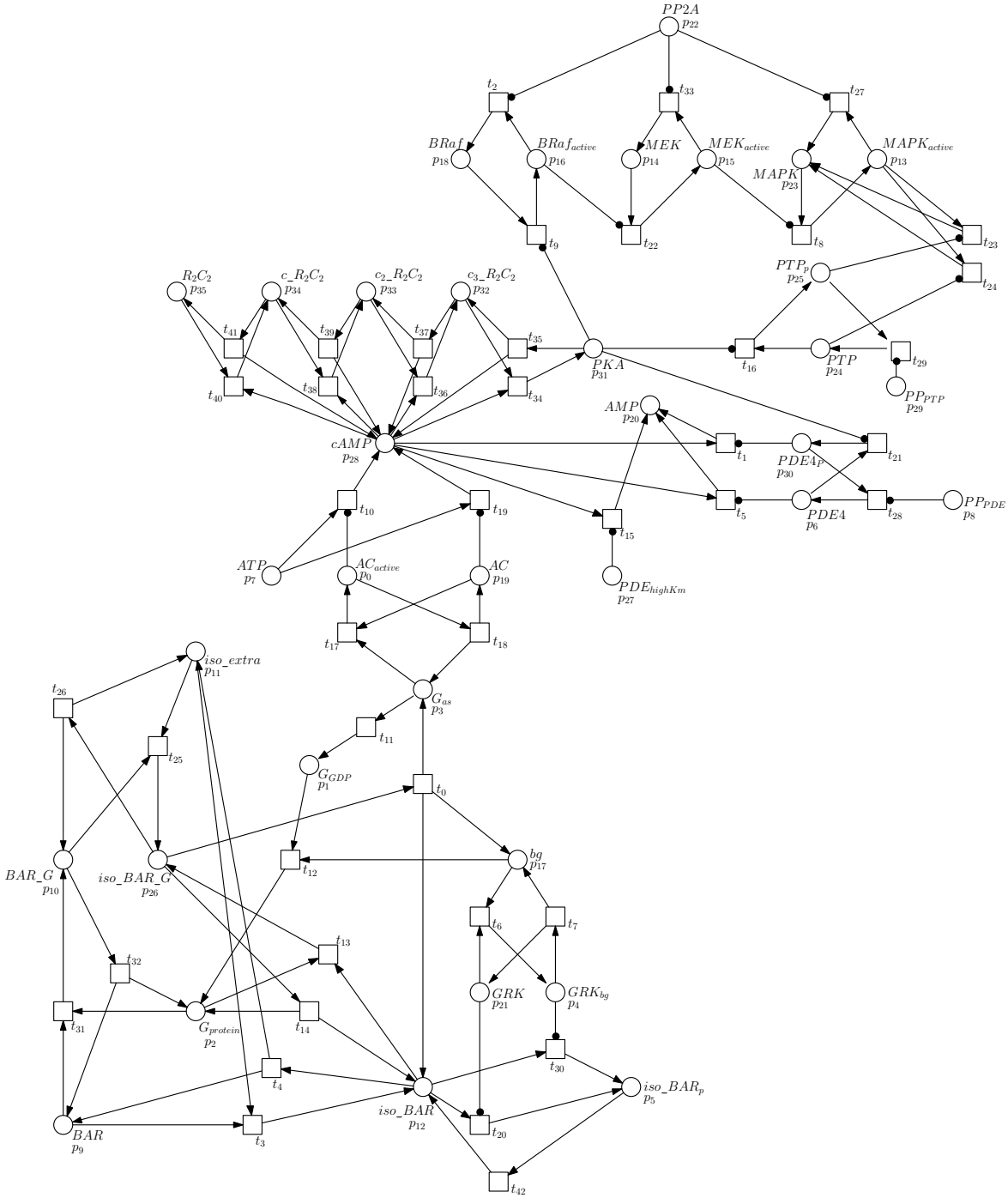

Figure 13: Petri net model N_{GPCR} of the signaling network from the beta-adrenergic receptor to PKA/MAPK

4.1. Phase I: Generation of the required data structures from an analysis of the Petri net model of the GPCR-PKA-MAPK signaling network

The three preparatory operations of the first phase of the algorithm are applied to the Petri net N_{GPCR}, resulting in the lookup table $placeToInvariant$, the list of the signaling segments of the model and the lookup table $RFAP$.

1. P-invariant analysis and validation. A p-invariant analysis is performed on the Petri net N_{GPCR}, and 17 p-invariants are found. The lookup table $placeToInvariant$ is created (Table S1) where each place of the Petri net is associated with the set of p-invariants the place belongs to. This table was generated after the validation and similarity detection of p-invariants, ensuring that no p-invariant shares more than 60% of places in their support.

2. Identification of signaling segments. The p-invariants of N_{GPCR} are used to create subnets. If the p-invariant support contains more than one place, then a subnet is formed with the places of the support and their connected transitions. One of the subnets of N_{GPCR}, the subnet $N_{GPCR_{BAR}}$ for the p-invariant BAR, is shown in Figure 14. A t-invariant analysis is performed on each of the 13 subnets of N_{GPCR} (four p-invariants of N_{GPCR} have only one place, thus no subnets are created for them). The 8 t-invariants found in $N_{GPCR_{BAR}}$ are $\{t_{30}, t_{42}\}$, $\{t_{20}, t_{42}\}$, $\{t_3, t_4\}$, $\{t_{31}, t_{32}\}$, $\{t_{26}, t_{25}\}$, $\{t_{13}, t_{14}\}$, $\{t_0, t_{13}\}$ and $\{t_0, t_4, t_{31}, t_{25}\}$. The merging of all the t-invariants of $N_{GPCR_{BAR}}$ having at least one transition in common produces two signaling segments: $SS_{BAR_1} = \{t_{30}, t_{20}, t_{42}\}$ and $SS_{BAR_2} = \{t_0, t_3, t_4, t_{31}, t_{32}, t_{25}, t_{26}\, t_{13}, t_{14}\}$. The complete list of signaling segments for the 13 subnets of N_{GPCR} is given in Table 12.

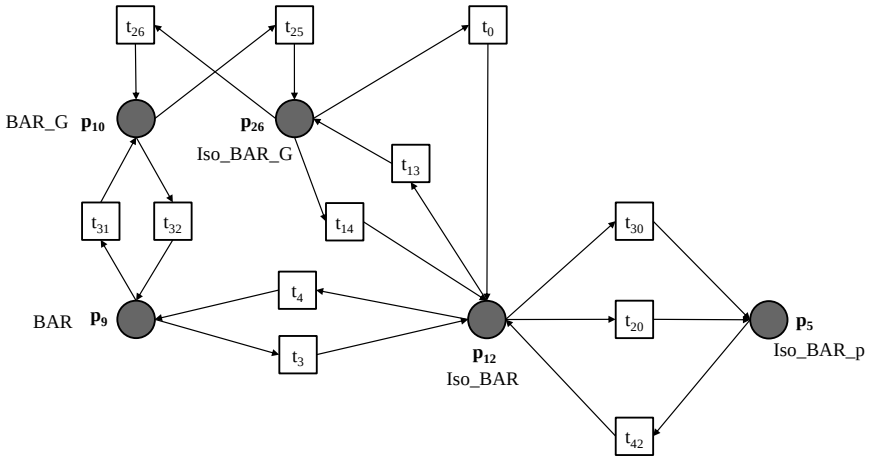

Figure 14: Subgraph $N_{GPCR_{BAR}}$ induced by the p-invariant BAR of N_{GPCR}. This subnet has 8 t-invariants and 2 signaling segments.

P-invariant	Signaling segments
Iso	$\{t_{14}, t_{13}, t_0, t_{25}, t_{26}, t_4, t_3\}$, $\{t_{20}, t_{42}, t_{30}\}$
BAR	$\{t_{20}, t_{42}, t_{30}\}$, $\{t_{14}, t_4, t_{13}, t_{32}, t_{31}, t_3, t_0, t_{25}, t_{26}\}$
Gbg	$\{t_6, t_7\}$, $\{t_{14}, t_{13}, t_{32}, t_{31}, t_0, t_{25}, t_{12}, t_{26}\}$
GRK	$\{t_6, t_7\}$
Gs	$\{t_{17}, t_{18}\}$, $\{t_{14}, t_{13}, t_{32}, t_{11}, t_{31}, t_0, t_{25}, t_{12}, t_{26}\}$
AC	$\{t_{17}, t_{18}\}$
cAMP	$\{t_{37}, t_{36}\}$, $\{t_{40}, t_{41}\}$, $\{t_{34}, t_{35}\}$, $\{t_{39}, t_{38}\}$
PKA	$\{t_{37}, t_{36}\}$, $\{t_{40}, t_{41}\}$, $\{t_{39}, t_{38}\}$, $\{t_{34}, t_{35}\}$
PDE	$\{t_{21}, t_{28}\}$
BRAF	$\{t_9, t_2\}$
MEK	$\{t_{33}, t_{22}\}$
MAPK	$\{t_{27}, t_{24}, t_8, t_{23}\}$
PTP	$\{t_{16}, t_{29}\}$

Table 12: The signaling segments for the p-invariants of N_{GPCR} with more than one place in their support.

3. Exploration of the Petri net model. The Petri net N_{GPCR} is explored from place to transition to place using a depth-first search algorithm starting at the place p_{11}, the signaling source of the model. Crossing a transition is a step. Quadruplets are stored in the table $RFAP$. The first quadruplets from this exploration are $[p_{11}, p_{12}, t_3, 0]$ and $[p_{11}, p_{26}, t_{25}, 0]$. At the following step, the quadruplets are $[p_{12}, p_{11}, t_4, 1]$, $[p_{12}, p_9, t_4, 1]$, $[p_{12}, p_5, t_{20}, 1]$, $[p_{12}, p_5, t_{30}, 1]$, $[p_{12}, p_{26}, t_{13}, 1]$, $[p_{26}, p_{11}, t_{26}, 1]$, $[p_{26}, p_2, t_{14}, 1]$, $[p_{26}, p_{12}, t_0, 1]$, $[p_{26}, p_{12}, t_{14}, 1]$, $[p_{26}, p_{10}, t_{26}, 1]$, $[p_{26}, p_{17}, t_0, 1]$,and $[p_{26}, p_3, t_0, 1]$. At each step, more quadruplets are added to the table $RFAP$. The exploration of N_{GPCR} is completed at step 7 with the last quadruplets $[p_{15}, p_{13}, t_8, 7]$, $[p_6, p_{20}, t_5, 7]$ and $[p_{24}, p_{23}, t_{24}, 7]$.

4.2. Phase II: Creation of the influence graph for the Petri net model of the GPCR-PKA-MAPK signaling network

The three transformation rules of the second phase of the algorithm are executed on the Petri net N_{GPCR}: the creation of the intermediate interaction graph, the removal of some interaction edges following the signaling segments rule, and the building of the influence graph. The rules use the data structures generated in the first phase.

4. Creation of the interaction graph. First, a vertex is added to the interaction graph for each of the 17 different sets of p-invariants in the lookup table E_p. Then, an interaction edge is added to the graph for each place in the vertices' supports. For example, the support of the vertex associated with the p-invariant set {AC, Gs} is the place p_0. The values associated with the place p_0 in the lookup table $RFAP$ are the quadruplets $[p_0, p_{19}, t_{18}, 3]$, $[p_0, p_3, t_{18}, 3]$ and $[p_0, p_{28}, t_{10}, 3]$. The target places of these quadruplets (p_{19}, p_3 and p_{28}) are in the support of the vertices associated to the p-invariant sets {AC}, {Gs} and {cAMP} respectively. Consequently, three edges are added to the graph: {AC, Gs}→{AC}, {AC, Gs}→{Gs}, and {AC, Gs}→{cAMP}. The quadruplet at the origin of an edge is associated with it. In total, 43 edges are added to the interaction graph of N_{GPCR} and as many entries are made to the lookup table OE associating the 8 steps necessary to explore N_{GPCR} with the quadruplets of the new edges. If a vertex is disconnected from the main graph after every support place have been processed, this vertex is removed. Figure S1 shows the interaction graph as it is created at this point. Table S2 presents the list of the edges with their source and target vertices and the quadruplet associated with each edge. When there is more than one quadruplet in the list, this means that there are as many edges between the two vertices.

5. Removal of interaction edges with the signaling segments rule. Using the lookup table OE, exploration steps are iterated from 0 to 7 and the associated quadruplets are tested. At step 0, two edges are processed. The edge from the vertex {Iso} to the vertex {BAR, Iso} with the quadruplet $[p_{11}, p_{12}, t_3, 0]$ has for implicit source the p-invariant Iso and for its implicit target the p-invariant BAR. The signaling segment of the p-invariant Iso with the transition t_3 is $\{t_{14}, t_{13}, t_0, t_{25}, t_{26}, t_4, t_3\}$. In the record associated with this signaling segment, the p-invariant {BAR} is added at step 0, and so that recorder is updated. The second edge that is processed is from the vertex {Iso} to the vertex {BAR, Gs, Iso, Gbg} with the quadruplet $[p_{11}, p_{26}, t_{25}, 0]$. It has for implicit source Iso and for implicit targets the p-invariants BAR, Gs and Gbg. The transition t_{25} is in the same signaling segment. BAR is already present in its associated record, but Gs and Gbg are added at step 0, and the recorder is updated. The presence of these p-invariants in the record of the recorder of Iso causes the removal of several other edges associated with later steps. For example, the edges {BAR, Iso} $\rightarrow$ {Iso} and {BAR, Iso} $\rightarrow$ {BAR} are removed because their associated quadruplet contains the transition t_4, which is in the previously identified signaling segment. Another example is the edge from the vertex {cAMP, PKA} to the vertex {PKA} with the quadruplet $[p_{34}, p_{35}, t_{41}, 5]$. Its implicit sources are the p-invariants cAMP and PKA and its implicit target is PKA. However, PKA is already in the record of the signaling segment $\{t_{40},\ t_{41}\}$ of cAMP since it was added at step 4 with the edge {cAMP}$\rightarrow$ {cAMP, PKA}. Consequently, this edge is also removed.

The quadruplets in red in Table S2 are the edges that are removed by the signaling segments rule. 21 edges remain in the interaction graph representing the Petri net N_{GPCR}. Figure S2 shows the final interaction graph after the application of the rule.

6. Building the influence graph from the interaction graph. The influence graph of the Petri net N_{GPCR} is built by processing the interaction graph built at the previous rule. This is accomplished one exploration step at a time with subgraphs of the interaction graph for each exploration step. We present the example of exploration steps 0, 3 and 4. At exploration step 0, the subgraph contains three vertices and the two edges {Iso}$\rightarrow${BAR, Iso} and {Iso}$\rightarrow${BAR, Gs, Iso, Gbg}. This is a maximal bipartite component with a first partition of one source vertex and a second partition with two target vertices. Iso is the core source p-invariant of this component. There is no core target p-invariant. The core source p-invariant is removed from the two target sets. The target is BAR since it is the target set with the lowest cardinality in the second partition. An influence arc is created from Iso to BAR with the two quadruplets $[p_{11}, p_{12}, t_3, 0]$ and $[p_{11}, p_{26}, t_{25}, 0]$ and the arc is added to the new influence graph. A condensing relationship is created with Iso being a codomain of BAR. At exploration step 3, the subgraph contains four vertices and the two edges {GRK, Gbg}$\rightarrow${BAR, Iso} and {AC, Gs}$\rightarrow${cAMP}, which already forms two maximal bipartite components. For the first component {GRK, Gbg}$\rightarrow${BAR, Iso}, a previously identified signal condensation relationship causes the p-invariants Gbg and Iso to be removed from the vertices of this component because they are codomains of GRK and BAR, respectively. With one p-invariant left in the source and target partitions each, these p-invariants are the source and target of the new influence arc (GRK$\rightarrow$BAR) associated with the quadruplet $[p_4, p_5, t_{30}, 3]$. No new condensation relationship is established since this is an enzymatic reaction. For the second component {AC, Gs}$\rightarrow${cAMP}, Gs is removed from the source vertex because of a signal condensation. This p-invariant is a codomain of AC. With one p-invariant left in the source and target partitions each, these p-invariants are the source and target of a new influence arc (AC$\rightarrow$cAMP) that is associated with the quadruplet $[p_0, p_{28}, t_{10}, 3]$. No new condensation relationship is established since this is also an enzymatic reaction. At step exploration 4, two new influence arcs are created (GRK$\rightarrow$BAR and AC$\rightarrow$cAMP), but since there are already arcs connecting these vertices in the influence graph the quadruplets $[p_{21}, p_5, t_{20}, 4]$ and $[p_{19}, p_{28}, t_{19}, 4]$ of the new arcs are merged with the quadruplets of the existing arcs. Table 13 shows the correspondence between the interaction graph and the influence graph. Figure S3 represents the unannotated influence graph of the Petri net model N_{GPCR}.

v_{source} in $G_{interaction}$	v_{target} in $G_{interaction}$	Quadruplets	v_{source} in $G_{influence}$	v_{target} in $G_{influence}$
{Iso}	{BAR, Iso}	$[p_{11}, p_{12}, t_3, 0]$	Iso	BAR
{Iso}	{BAR, Gs, Iso, Gbg}	$[p_{11}, p_{26}, t_{25}, 0]$		
{BAR, Iso}	{BAR, Gs, Iso, Gbg}	$[p_{12}, p_{26}, t_{13}, 1]$*	BAR	Gbg
{BAR, Gs, Iso, Gbg}	{Gbg}	$[p_{26}, p_{17}, t_0, 1]$		
{BAR, Gs, Iso, Gbg}	{Gs, Gbg}	$[p_{26}, p_2, t_{14}, 1]$*		
{BAR, Gs, Iso, Gbg}	{BAR, Iso}	$[p_{26}, p_{12}, t_{14}, 1]$*, $[p_{26}, p_{12}, t_0, 1]$†		
{BAR, Gs, Iso, Gbg}	{Gs}	$[p_{26}, p_3, t_0, 1]$	BAR	Gs
{BAR, Iso}	{BAR, Gs, Iso, Gbg}	$[p_{12}, p_{26}, t_{13}, 1]$*		
{BAR, Gs, Iso, Gbg}	{Gs, Gbg}	$[p_{26}, p_2, t_{14}, 1]$*		
{BAR, Gs, Iso, Gbg}	{BAR, Iso}	$[p_{26}, p_{12}, t_{14}, 1]$*, $[p_{26}, p_{12}, t_0, 1]$†		
{Gs}	{AC, Gs}	$[p_3, p_0, t_{17}, 2]$	Gs	AC
{Gbg}	{GRK, Gbg}	$[p_{17}, p_4, t_6, 2]$	Gbg	GRK
{AC}	{cAMP}	$[p_{19}, p_{28}, t_{19}, 4]$	AC	cAMP
{AC, Gs}	{cAMP}	$[p_0, p_{28}, t_{10}, 3]$		
{GRK, Gbg}	{BAR, Iso}	$[p_4, p_5, t_{30}, 3]$	GRK	BAR
{GRK}	{BAR, Iso}	$[p_{21}, p_5, t_{20}, 4]$		
{cAMP}	{cAMP, PKA}	$[p_{28}, p_{34}, t_{40}, 4]$, $[p_{28}, p_{31}, t_{34}, 4]$, $[p_{28}, p_{32}, t_{36}, 4]$, $[p_{28}, p_{33}, t_{38}, 4]$	cAMP	PKA
{cAMP, PKA}	{BRaf}	$[p_{31}, p_{16}, t_9, 5]$	PKA	Braf
{cAMP, PKA}	{PTP}	$[p_{31}, p_{25}, t_{16}, 5]$	PKA	PTP
{cAMP, PKA}	{PDE}	$[p_{31}, p_{30}, t_{21}, 5]$	PKA	PDE
{PTP}	{MAPK}	$[p_{25}, p_{23}, t_{23}, 6]$, $[p_{24}, p_{23}, t_{24}, 7]$	PTP	MAPK
{BRaf}	{MEK}	$[p_{16}, p_{15}, t_{22}, 6]$	BRaf	MEK
{PDE}	{cAMP}	$[p_{30}, p_{20}, t_1, 6]$, $[p_6, p_{20}, t_5, 7]$	PDE	cAMP
{MEK}	{MAPK}	$[p_{15}, p_{13}, t_8, 7]$	MEK	MAPK

Table 13: This table shows the result of the transformation from the interaction graph to the influence graph representation of N_{GPCR}. In the interaction graph, each quadruplet represents a different edge. In the influence graph, every quadruplets between the same source and target vertices are associated with a single arc. For example, the arc between Iso and BAR in the influence graph combines two edges from the interaction graph: {Iso} → {BAR, Iso} and {Iso} → {BAR, Gs, Iso, Gbg}. The quadruplets marked with * are not included in the influence graph because their transitions t_{13} and t_{14} form a trivial t-invariant. The quadruplet $[p_{26}, p_{12}, t_0, 1]$ marked with † is not included in the influence graph because its target place p_{12} is not in the support of the target vertices Gbg or Gs.

4.3. Phase III: Annotation of the influence graph for the Petri net model of the GPCR-PKA-MAPK signaling network

The three rules of the final phase of the algorithm are executed for the Petri net N_{GPCR} and annotate the influence graph created at the second phase: detecting the signaling places for each vertex of the influence graph, associating transitions from the Petri net model with the arcs of the influence graph, and assigning a type (activation or inhibition) to the arcs.

7. Detecting signaling places. The annotation of the influence graph starts by detecting the signaling places of the different vertices. A signaling place corresponds to an active state of the molecule. This

rule first identifies the leaves of the influence graph. In the influence graph of the Petri net N_{GPCR}, the vertex MAPK is the only leaf. Since this vertex is connected to the vertices MEK and PTP by enzymatic reactions, no verification of the graph is necessary. The algorithm continues by identifying the signaling places of each vertex by applying the criteria of Definition 19 to the quadruplets of the arcs starting from that vertex. For the vertex Gs, the processing of the quadruplet $[p_3, p_0, t_{17}, 2]$ of the arc to the vertex AC detects p_3 and p_0 as signaling places for Gs because both places are in its support. For the vertex cAMP, the processing of the quadruplets $[p_{28}, p_{34}, t_{40}, 4]$, $[p_{28}, p_{31}, t_{34}, 4]$, $[p_{28}, p_{32}, t_{36}, 4]$ and $[p_{28}, p_{33}, t_{38}, 4]$ of the arc to the vertex PKA detects p_{28}, p_{34}, p_{31}, p_{32} and p_{33} as signaling places of this vertex because all places are in the support of cAMP. For the vertex MEK, the processing of the quadruplet $[p_{15}, p_{13}, t_8, 7]$ of the arc to the vertex MAPK detects p_{15} as the signaling place of this vertex. The target place p_{13} is not labeled as a signaling place because it is not in the support of the vertex MEK. For the leaf vertex MAPK, the user is prompted to identify its signaling places since it has no outgoing arc. The place p_{13} is selected. The next test is to search for an unbinding reaction caused by the signal. The transition t_0 has one preplace and three postplaces. It is associated with arcs from the vertex BAR. With the criteria of Definition 19, only the place p_{26} is identified as a signaling places. However, it is possible that p_{12} can also be considered an active state for the receptor since it is bound to the agonist Iso. Because of this undecidability, the user is prompted and p_{12} is added to the list of signaling places of the vertex BAR. After this processing, four vertices have a list of signaling places that includes their entire support: GRK, AC, PTP and PDE. This situation is caused by a modeling choice from the authors of the model: the inactive state of these enzymes is modeled to have a basal level of activity instead of having absolutely no effect at all. For the cyclase AC, this is shown by the transition t_{19} which represents the basal catalytic conversion of ATP into cAMP. The user is prompted and only p_0 is labeled as a signaling place of this vertex. To complete the first annotation rule of the influence graph of the Petri net N_{GPCR}, all the places of the signal vertex Iso are labeled as signaling places. Also, the places that were not detected as signaling places are labeled as non-signaling places. The signaling places for the vertices of the influence graph are listed in Table 14.

Vertex	**Signaling places**	**Non-signaling places**
Iso	p_{12}, p_{26}, p_{11}, p_5	
BAR	p_{12}, p_{26}	p_5, p_9, p_{10}
Gbg	p_4, p_{17}	p_{26}, p_{10}, p_2
Gs	p_3, p_0	p_1, p_{26}, p_{10}, p_2
AC	p_0	p_{19}
GRK	p_4	p_{21}
cAMP	p_{31}, p_{33}, p_{34}, p_{32}, p_{28}	p_{20}, p_7
PKA	p_{31}	p_{32}, p_{33}, p_{34}, p_{35}
PDE4	p_{30}	p_6
BRaf	p_{16}	p_{18}
MEK	p_{15}	p_{14}
MAPK	p_{13}	p_{23}
PTP	p_{24}	p_{25}

Table 14: The signaling and the non-signaling places of the vertex of the influence graph of the Petri net N_{GPCR} as identified by the rule 3.3.1.

8. Associating signaling transitions to influence arcs. After annotating the influence graph vertices with signaling places, its arcs are annotated with the transitions transmitting the signal in the model. Each arc of the influence graph of the Petri net N_{GPCR} is tested with the conditions of Definition 20. Four quadruplets are removed. For the arc AC→cAMP, the quadruplet with the transition t_{19} is removed because the source place of the quadruplet is a non-signaling place of the vertex AC.

For the same reason, the quadruplets with the transitions t_5, t_{23} and t_{20} are removed from the arcs PDE→cAMP, PTP→MAPK and GRK→BAR, respectively. In total, 19 quadruplets remain in the influence graph and the signaling transitions are associated with the arcs.

9. Determining the type of influence arcs. In the last rule of the transformation algorithm, the influence type of the arcs of the graph is determined with Definition 21. Of the 15 influence arcs $e(v_{source}, v_{target})$ of the graph representation of the Petri net N_{GPCR}, four arcs respect the condition of having a quadruplet $[p_{source}, p_{target}, t, step]$ with p_{target} being a non-signaling place of v_{target} and all preplaces of t other than p_{source} are signaling places of v_{source}. The influence type of these arcs is inhibitory.

These four arcs are: 1) GRK→BAR where p_5 is a non-signaling place of the vertex BAR and p_{12} is a signaling place of the same vertex for the quadruplet $[p_4, p_5, t_{30}, 3]$, 2) PDE→cAMP where p_{20} is a non-signaling place of the vertex cAMP and p_{28} is a signaling place of the same vertex for the quadruplet $[p_{30}, p_{20}, t_1, 6]$, 3) PKA→PTP where p_{25} is a non-signaling place of the vertex PTP and p_{25} is a signaling place of the same vertex for the quadruplet $[p_{31}, p_{25}, t_{16}, 5]$ and 4) PTP→MAPK where p_{23} is a non-signaling place of the vertex MAPK and p_{13} is a signaling place of the same vertex for the quadruplet $[p_{24}, p_{23}, t_{24}, 7]$. The other arcs of the graph represent an activation influence. For example, the arc BAR→Gs with the quadruplet $[p_{26}, p_3, t_0, 1]$ has a target place p_3 that is a signaling place, thus the arc has an activation influence. The final influence graph of the Petri net N_{GPCR} is shown in Figure 15.

5. Concluding remarks

The algorithm presented in this paper can be used to transform a biological model represented as a Petri net into an annotated influence graph. The resulting graph is useful to study and validate the topology of the model's network. This representation is also particularly useful for signaling systems to understand how the regulatory network motifs and their interconnections process biological signals. With the annotations, it becomes possible to map simulation data onto the influence graph to create a dynamic representation of the simulated model, or what we call a dynamic graph (find examples in [31] and [32]). Following this idea, if the model is a continuous or hybrid Petri net with kinetic information and initial conditions that can be simulated, then the resulting time series can be used to color the graph vertices and to modify the width of the arcs in a time-dependent manner as molecules are activated and deactivated. The state variables of the model are the signaling places of the graph, and the reaction rates are the signaling transitions. The output of this transformation is a systemic perspective of a biological dynamical model and one can see how the dynamics of regulatory motifs such as desensitization, crosstalk, switch-like behavior, overshoot correction, frequency detection or noise filtering can lead to a complex biological response [26]. The transformation example presented in Section 4 is a Petri net model of 34 places and 38 transitions. After the transformation, the resulting influence graph, with 13 vertices and 15 arcs, represents the underlying biological entities and reactions of the model. The two negative feedback loops and the coherent feedforward motif of this signaling pathway become obvious. By combining simulation data from this model with the influence graph, it becomes possible to observe when the loops are active and understand how the signal is processed by this pathway. Every mathematical model of a signaling network respecting the input constraints of the algorithm can be transformed into an influence graph by first converting it to a Petri net model, with a tool such as Snoopy, which has a SBML import feature [38].

This first version of the transformation algorithm has some limitations. Despite the fact that many signals might be simultaneously stimulating a biological system, dealing with only one source of signal is a limitation of the algorithm in its current form. Also, enzymatic reactions must be represented by a single Michaelis-Menten reaction, not by three mass action reactions. In the Petri net, this

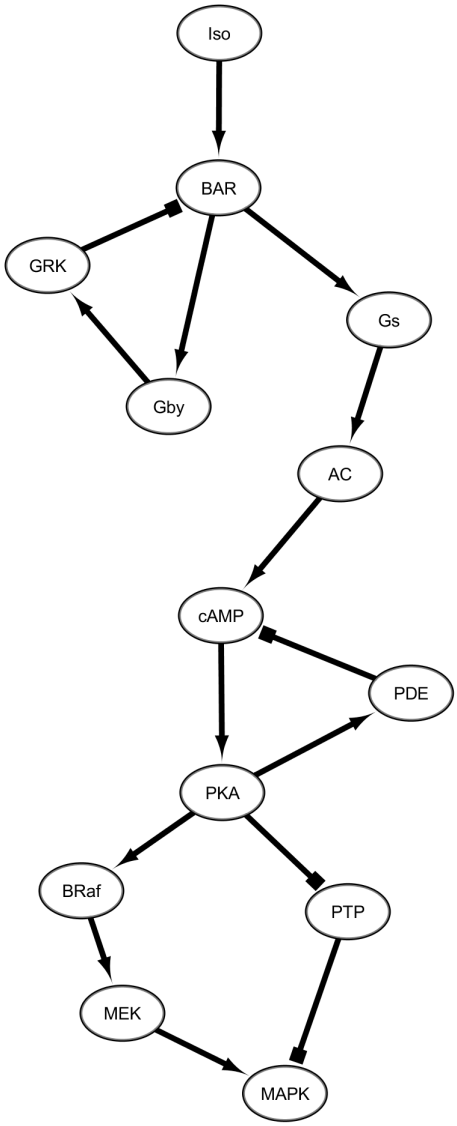

Figure 15: The annotated influence graph of the Petri net N_{GPCR} created by the transformation algorithm. Activation arcs are represented by arrows and inhibition arcs have T-shapped heads.

means that there is only one transition per enzymatic reaction and a read arc linking the enzyme to the transition. To allow for the transformation of models using complete enzymatic representations, a new transformation rule could automatically convert these three-step reactions into a single one. Dealing with larger complexes is also problematic for the current algorithm, particularly if allosteric modulators regulate the activity of enzymes. The direction of these binding interactions is tricky to interpret. Maximal bipartite decomposition might be useful to identify these reactions in a model, and this will be considered in future developments of the algorithm. When information is missing, the current algorithm sends requests to a user. This information is sometimes present in the kinetic parameters of the mathematical model. Consequently, another possible improvement of the algorithm is to explore if a Petri net with kinetic parameters, such as a continuous Petri net, could provide

this information to the algorithm and thus reduce the need for requests. The algorithm can already transform several biological signaling models and promises to be a practical and handy new tool for modeling in systems biology.

6. Declaration of interests

The authors declare that they have no competing interests.

7. Declaration of generative AI in scientific writing

The authors did not use any AI or AI-assisted technologies when writing the content of this manuscript.

8. Acknowledgments

We are grateful for the useful comments formulated by the anonymous reviewers of this paper. Their observations and suggestions helped us to improve our manuscript. This work was funded by a Discovery grant from the Natural Sciences and Engineering Research Council of Canada awarded to Simon V. Hardy.

9. Author contributions statement

SV Hardy proposed the idea. The algorithm was mainly developed by S Gamache-Poirier and A Souvane with later contributions by W Leclerc and C Villeneuve. W Leclerc wrote a first version of the algorithm description and reviewed the manuscript. SV Hardy wrote and reviewed the manuscript.

References

[1] Simon V Hardy and Pierre N Robillard. Modeling and simulation of molecular biology systems using Petri nets: modeling goals of various approaches. *Journal of bioinformatics and computational biology*, 2(04):619–637, 2004.

[2] Fei Liu, Hiroshi Matsuno, and Monika Heiner. *Petri Nets for Systems Biology Modelling and Analysis*, chapter 2, pages 15–34. John Wiley & Sons, Ltd, 2022.

[3] Claudine Chaouiya. Petri net modelling of biological networks. *Briefings in Bioinformatics*, 8(4):210–219, 07 2007.

[4] Fei Liu, Monika Heiner, and David Gilbert. Protocol for biomodel engineering of unilevel to multilevel biological models using colored petri nets. *STAR Protocols*, 4(4):102651, 2023.

[5] Monika Heiner and David Gilbert. How might Petri nets enhance your systems biology toolkit. In Lars M. Kristensen and Laure Petrucci, editors, *Applications and Theory of Petri Nets*, pages 17–37, Berlin, Heidelberg, 2011. Springer Berlin Heidelberg.

[6] Fei Liu, Wujie Sun, Monika Heiner, and David Gilbert. Hybrid modelling of biological systems using fuzzy continuous Petri nets. *Briefings in Bioinformatics*, 22(1):438–450, 12 2019.

[7] Christoph Brinkrolf, Lennart Ochel, and Ralf Hofestädt. Vanesa: An open-source hybrid functional Petri net modeling and simulation environment in systems biology. *Biosystems*, 210:104531, 2021.

[8] Bartłomiej Szawulak and Piotr Formanowicz. Graphlets in comparison of Petri net-based models of biological systems. *Scientific Reports*, 12(1):20942, Dec 2022.

[9] Kira Trares, Jörg Ackermann, and Ina Koch. The canonical and non-canonical nf-κb pathways and their crosstalk: A comparative study based on Petri nets. *Biosystems*, 211:104564, 2022.

[10] George Assaf, Monika Heiner, and Fei Liu. Coloured fuzzy Petri nets for modelling and analysing membrane systems. *Biosystems*, 212:104592, 2022.

[11] Edda Klipp and Wolfram Liebermeister. Mathematical modeling of intracellular signaling pathways. *BMC Neuroscience*, 7(S1), 2006-10.

[12] Karsten Wolf. *How Petri Net Theory Serves Petri Net Model Checking: A Survey*, pages 36–63. Springer Berlin Heidelberg, Berlin, Heidelberg, 2019.

[13] Robin Donaldson and David Gilbert. A model checking approach to the parameter estimation of biochemical pathways. In Monika Heiner and Adelinde M. Uhrmacher, editors, *Computational Methods in Systems Biology*, pages 269–287, Berlin, Heidelberg, 2008. Springer Berlin Heidelberg.

[14] Marta Kwiatkowska, Gethin Norman, and David Parker. Using probabilistic model checking in systems biology. *SIGMETRICS Perform. Eval. Rev.*, 35(4):14–21, March 2008.

[15] Nathalie Chabrier and François Fages. Symbolic model checking of biochemical networks. In Corrado Priami, editor, *Computational Methods in Systems Biology*, pages 149–162, Berlin, Heidelberg, 2003. Springer Berlin Heidelberg.

[16] Chuan Hock Koh, Masao Nagasaki, Ayumu Saito, Chen Li, Limsoon Wong, and Satoru Miyano. Mirach: efficient model checker for quantitative biological pathway models. *Bioinformatics*, 27(5):734–735, 01 2011.

[17] Sylvain Soliman and Monika Heiner. A unique transformation from ordinary differential equations to reaction networks. *PLoS One*, 5(12):e14284, Dec 2010.

[18] Chen Li, Masao Nagasaki, Ayumu Saito, and Satoru Miyano. Time-dependent structural transformation analysis to high-level Petri net model with active state transition diagram. *BMC Systems Biology*, 4, April 2010.

[19] Nancy R. Gough, Elizabeth M. Adler, and L. Bryan Ray. Cell signaling: From beginning to end. *Science's STKE*, 2005(305):eg9–eg9, 2005.

[20] Arvind Rao, Alfred O. Hero, David J. States, and James Douglas Engel. Using directed information to build biologically relevant influence networks. *Journal of Bioinformatics and Computational Biology*, 06(03):493–519, 2008.

[21] François Fages and Sylvain Soliman. From reaction models to influence graphs and back: A theorem. In Jasmin Fisher, editor, *Formal Methods in Systems Biology*, pages 90–102, Berlin, Heidelberg, 2008. Springer Berlin Heidelberg.

[22] François Fages, Thierry Martinez, David A. Rosenblueth, and Sylvain Soliman. Influence networks compared with reaction networks: Semantics, expressivity and attractors. *IEEE/ACM Transactions on Computational Biology and Bioinformatics*, 15(4):1138–1151, 2018.

[23] Avi Ma'ayan, Sherry L. Jenkins, Susana Neves, Anthony Hasseldine, Elizabeth Grace, Benjamin Dubin-Thaler, Narat J. Eungdamrong, Gehzi Weng, Prahlad T. Ram, J. Jeremy Rice, Aaron Kershenbaum, Gustavo A. Stolovitzky, Robert D. Blitzer, and Ravi Iyengar. Formation of regulatory patterns during signal propagation in a mammalian cellular network. *Science*, 309(5737):1078–1083, 2005.

[24] Boris Kholodenko, Michael B. Yaffe, and Walter Kolch. Computational approaches for analyzing information flow in biological networks. *Science Signaling*, 5(220):re1–re1, 2012.

[25] Uri Alon. Network motifs: Theory and experimental approaches. *Nature Reviews Genetics*, 8(6):450–461, June 2007.

[26] Evren U. Azeloglu and Ravi Iyengar. Signaling networks: Information flow, computation, and decision making. *Cold Spring Harbor Perspectives in Biology*, 7(4), 2015.

[27] Attila Csikász-Nagy, Orsolya Kapuy, Attila Tóth, Csaba Pál, Lars Juhl Jensen, Frank Uhlmann, John J Tyson, and Béla Novák. Cell cycle regulation by feed-forward loops coupling transcription and phosphorylation. *Molecular Systems Biology*, 5(1):236, 2009.

[28] John J. Tyson and Béla Novák. Functional motifs in biochemical reaction networks. *Annual Review of Physical Chemistry*, 61(Volume 61, 2010):219–240, 2010.

[29] John J Tyson, Katherine C Chen, and Bela Novak. Sniffers, buzzers, toggles and blinkers: dynamics of regulatory and signaling pathways in the cell. *Current Opinion in Cell Biology*, 15(2):221–231, 2003.

[30] Evren U. Azeloglu, Simon V. Hardy, Narat John Eungdamrong, Yibang Chen, Gomathi Jayaraman, Peter Y. Chuang, Wei Fang, Huabao Xiong, Susana R. Neves, Mohit R. Jain, Hong Li, Avi Ma'ayan, Ronald E. Gordon, John Cijiang He, and Ravi Iyengar. Interconnected network motifs control podocyte morphology and kidney function. *Science Signaling*, 7(311):ra12–ra12, 2014.

[31] Simon V Hardy and Mathieu Pagé Fortin. Analysis of the signal transduction dynamics regulating mtor with mathematical modeling, Petri nets and dynamic graphs. *PNSE@ Petri Nets*, 2016:347–361, 2016.

[32] Mathieu Pagé Fortin and Simon V Hardy. A hybrid Petri net model of the Akt-Wnt-mTOR-p70S6K signalling network in neurons. *Fundamenta Informaticae*, 160(1-2):1–25, 2018.

[33] David René and Hassane Alla. *Discrete, Continuous, and Hybrid Petri Nets.* Springer Berlin, 2014.

[34] Susana R Neves, Panayiotis Tsokas, Anamika Sarkar, Elizabeth A Grace, Padmini Rangamani, Stephen M Taubenfeld, Cristina M Alberini, James C Schaff, Robert D Blitzer, Ion I Moraru, and Ravi Iyengar. Cell shape and negative links in regulatory motifs together control spatial information flow in signaling networks. *Cell*, 133(4):666–680, May 2008.

[35] J.S. Chang C.F. Law, B.H. Gwee. Fast and memory-efficient invariant computation of ordinary Petri nets. *IET Computers & Digital Techniques*, 2007.

[36] Monika Heiner, Ina Koch, and Jürgen Will. Model validation of biological pathways using Petri nets—demonstrated for apoptosis. *Biosystems*, 75(1):15 – 28, 2004. Computational Systems Biology.

[37] Coen Bron and Joep Kerbosch. Algorithm 457: Finding all cliques of an undirected graph. *Commun. ACM*, 16(9):575–577, September 1973.

[38] Monika Heiner, Mostafa Herajy, Fei Liu, Christian Rohr, and Martin Schwarick. Snoopy — a unifying Petri net tool. In *Proceedings of the 33rd International Conference on Application and Theory of Petri Nets*, PETRI NETS'12, page 398–407, Berlin, Heidelberg, 2012. Springer-Verlag.

Supplementary material

Detailed description of the construction of the lookup table RFAP from example 4

At the first step of the DFS of the Petri net N_1 from the source place p_1 (step 0), t_0 is crossed and the target place p_3 is reached. The quadruplet $[p_1, p_3, t_0, 0]$ is added in the lookup table $RFAP$ for the place p_1. The transition t_0 has no other post-place and p_1 has no other post-transition, thus p_1 is set as visited, and the unvisited target place p_3 becomes the source place of the next step. At the second step of the DFS (step 1), t_1 is crossed from the source place p_3 and the target places p_1 and p_2 are reached. At the same step, t_2 is crossed from the source place p_3 and the target place p_5 is reached. The quadruplets $[p_3, p_1, t_1, 1]$, $[p_3, p_2, t_1, 1]$ and $[p_3, p_5, t_2, 1]$ are added to the lookup table $RFAP$ for the place p_3. The transitions t_1 and t_2 have no other post-place and p_3 has no other post-transition, thus p_3 is set as visited, and the unvisited target places p_2 and p_5 become the source places of the next step of the DFS (step 2). From p_2, t_0 is crossed to reach p_3, which adds the quadruplet $[p_2, p_3, t_0, 2]$ to the table $RFAP$. The place p_2 has no other post-transition and is set as visited. From p_5, t_3 is crossed to reach p_4, which adds the quadruplet $[p_5, p_4, t_3, 2]$ to the table $RFAP$. The place p_5 has no other post-transition and is set as visited, and the unvisited target place p_4 becomes the source places of the next step of the DFS (step 3). From p_4, t_2 is crossed to reach p_5, which adds the quadruplet $[p_4, p_5, t_2, 3]$ to the table $RFAP$. The place p_4 has no other post-transition and is set as visited. Since p_5 has already been visited, the DFS ends. Table 3 of the paper is the $RFAP$ lookup table for the DFS of the Petri net N_1.

Detailed description of the removal of edges with the signaling segments rule from example 10

Let's apply the signaling segments rule to the Petri net N_1 to decide if certain edges of the interaction graph have to be removed following Algorithm 2.1. Considering the lookup table OE (Table 5), the first edge in the interaction graph to be considered according to its exploration step is the edge from the vertex v_1 to the vertex v_3 with its associated quadruplet $[p_1, p_3, t_0, 0]$. In the lookup table $placeToInvariant$, the source place p_1 of the quadruplet is associated with the p-invariant set $\{y_1\}$ and the target place p_3 to the p-invariant set $\{y_1, y_2\}$. After applying the function `implicitConnectedInv` to these two sets, the source p-invariant set is not modified because $\{y_1\} \neq \{y_1, y_2\}$ but $\{y_1\} \subset \{y_1, y_2\}$, thus it is still $\{y_1\}$; but the target p-invariant set is modified to $\{y_2\}$, which is the result of $\{y_1, y_2\} - \{y_1\}$, since $\{y_1, y_2\} \neq \{y_1\}$ and $\{y_1, y_2\} \not\subset \{y_1\}$. Then, using `invariantToRecorders`, the set of recorders for the target y_2 is accessed. This set contains only one recorder because there is one signaling segment ($\{t_0, t_1\}$) associated with this p-invariant. Its record is still empty at this point. Since the source p-invariant y_1 is not in this record, the p-invariant y_2 is consequently added at the 0th step of the record for this signaling segment in the recorder of the source p-invariant. The edge is thus kept in the interaction graph. To summarize, if the signaling segment has not already been used to transduce the signal from the target p-invariant to the source p-invariant, the target p-invariant is registered in the source recorder for the corresponding signaling segment at the nth step. As intended by this rule, this will prevent this signaling segment to be used at a later step. Since no other edge shares this source place and transition, the algorithm is ready to evaluate another edge. It continues with one of the three edges at exploration step 1. For the edge from v_3 to v_1 with the associated quadruplet $[p_3, p_1, t_1, 1]$, the implicit source p-invariant set is $\{y_2\}$ and the target p-invariant set is $\{y_1\}$. The set of recorders for target p-invariant y_1 is consequently accessed. Since the recorder of the signaling segment $\{t_0, t_1\}$ now contains the y_2, which is the source p-invariant of this quadruplet, this edge is removed from the interaction graph. Subsequently, because the quadruplet $[p_3, p_2, t_1, 1]$ of the edge from v_3 to v_2 contains the same source place and transition, this edge is also removed. The last edge of step 1, which connects the vertices v_3 and v_4 and is associated with the quadruplet $[p_3, p_5, t_2, 1]$, is kept in the interaction graph because neither of its source p-invariants y_1

and y_2 is in the recorder of the target p-invariant y_3 for the signaling segment $\{t_2, t_3\}$. However, in this case, since this signaling segment is not in the recorders of source p-invariants y_1 and y_2, the target p-invariant y_3 is not added at the 1st step of the recorders. The final edge to be considered connects the vertices v_2 and v_3 and has $[p_2, p_3, t_0, 2]$ as its quadruplet. Its source p-invariant set is $\{y_2\}$ and its implicit target set is $\{y_1\}$. Because the source p-invariant y_2 is already in the recorder associated with y_1, for the signaling segment $\{t_0, t_1\}$, this edge is removed from the graph. In summary, after applying the signaling segments rule to the interaction graph of the Petri net N_1, two edges are kept and three edges are removed. The edges with the quadruplets $[p_3, p_1, t_1, 1]$, $[p_3, p_2, t_1, 1]$ and $[p_2, p_3, t_0, 2]$ are all removed because the edge $[p_1, p_3, t_0, 0]$ is first considered and that t_0 and t_1 are part of the same signaling segment. The resulting interaction graph is shown in Figure 7 of the paper. The state of the lookup table `invariantToRecorders` after the application of the rule is shown in Table 6 of the paper.

Places	E_p, set of p-invariants
p_{11} : iso_extra	{ISO}
p_5 : iso_BAR_p_cyto_mem	{ISO, BAR}
p_{12} : iso_BAR_cyto_mem	{ISO, BAR}
p_{26} : iso_BAR_G_cyto_mem	{ISO, BAR, Gs, Gbg}
p_4 : GRK_bg_cyto	{Gbg, GRK}
p_{17} : bg_cyto	{Gbg}
p_{21} : GRK_cyto	{GRK}
p_9 : BAR_cyto_mem	{BAR}
p_{10} : BAR_G_cyto_mem	{BAR, Gs, Gbg}
p_2 : G_protein_cyto	{Gbg, Gs}
p_3 : G_a_s_cyto	{Gs}
p_1 : G_GDP_cyto	{Gs}
p_0 : AC_active_cyto_mem	{AC, Gs}
p_{19} : AC_cyto_mem	{AC}
p_{35} : R2C2_cyto	{PKA}
p_{32} : c3_R2C2_cyto	{cAMP, PKA}
p_{34} : c_R2C2_cyto	{cAMP, PKA}
p_{31} : PKA_cyto	{cAMP, PKA}
p_{33} : c2_R2C2_cyto	{cAMP, PKA}
p_{20} : AMP_cyto	{cAMP}
p_7 : ATP_cyto	{cAMP}
p_{28} : cAMP_cyto	{cAMP}
p_6 : PDE4_cyto	{PDE}
p_{30} : PDE4_P_cyto	{PDE}
p_{25} : PTP_PKA_cyto	{PTP}
p_{24} : PTP_cyto	{PTP}
p_{13} : MAPK_active_cyto	{MAPK}
p_{23} : MAPK_cyto	{MAPK}
p_{14} : MEK_cyto	{MEK}
p_{15} : MEK_active_cyto	{MEK}
p_{16} : B_Raf_active_cyto	{Braf}
p_{18} : B_Raf_cyto	{Braf}
p_{27} : PDE_high_km_cyto	{$\text{PDE}_{\text{highKm}}$}
p_{29} : PTP_PP_cyto	{PP_PTP}
p_8 : PP_PDE_cyto	{PP_PDE}
p_{22} : PP2A_cyto	{PP2A}

Table S1: The lookup table *placeToInvariant* the Petri net N_{GPCR} associating each of its places to the set of p-invariants the place belongs to.

Source vertex	Target vertex	Quadruplets
{Iso}	{BAR, Iso}	$[p_{11}, p_{12}, t_3, 0]$
{Iso}	{BAR, Gs, Iso, Gbg}	$[p_{11}, p_{26}, t_{25}, 0]$
{BAR, Iso}	{BAR, Gs, Iso, Gbg}	$[p_{12}, p_{26}, t_{13}, 1]$
{BAR, Iso}	{BAR}	$[p_{12}, p_9, t_4, 1]$
{BAR, Iso}	{Iso}	$[p_{12}, p_{11}, t_4, 1]$
{BAR, Gs, Iso, Gbg}	{Gs}	$[p_{26}, p_3, t_0, 1]$
{BAR, Gs, Iso, Gbg}	{Gbg}	$[p_{26}, p_{17}, t_0, 1]$
{BAR, Gs, Iso, Gbg}	{BAR, Iso}	$[p_{26}, p_{12}, t_{14}, 1]$, $[p_{26}, p_{12}, t_0, 1]$
{BAR, Gs, Iso, Gbg}	{Gs, Gbg}	$[p_{26}, p_2, t_{14}, 1]$
{BAR, Gs, Iso, Gbg}	{BAR, Gs, Gbg}	$[p_{26}, p_{10}, t_{26}, 1]$
{BAR, Gs, Iso, Gbg}	{Iso}	$[p_{26}, p_{11}, t_{26}, 1]$
{BAR, Gs, Gbg}	{BAR, Gs, Iso, Gbg}	$[p_{10}, p_{26}, t_{25}, 2]$
{BAR, Gs, Gbg}	{BAR}	$[p_{10}, p_9, t_{32}, 2]$
{BAR, Gs, Gbg}	{Gs, Gbg}	$[p_{10}, p_2, t_{32}, 2]$
{BAR}	{BAR, Gs, Gbg}	$[p_9, p_{10}, t_{31}, 2]$
{BAR}	{BAR, Iso}	$[p_9, p_{12}, t_3, 2]$
{Gs, Gbg}	{BAR, Gs, Iso, Gbg}	$[p_2, p_{26}, t_{13}, 2]$
{Gs, Gbg}	{BAR, Gs, Gbg}	$[p_2, p_{10}, t_{31}, 2]$
{Gs}	{AC, Gs}	$[p_3, p_0, t_{17}, 2]$
{Gbg}	{Gs, Gbg}	$[p_{17}, p_2, t_{12}, 2]$
{Gbg}	{GRK, Gbg}	$[p_{17}, p_4, t_6, 2]$
{AC, Gs}	{AC}	$[p_0, p_{19}, t_{18}, 3]$
{Gs}	{Gs, Gbg}	$[p_1, p_2, t_{12}, 3]$
{AC, Gs}	{Gs}	$[p_0, p_3, t_{18}, 3]$
{AC, Gs}	{cAMP}	$[p_0, p_{28}, t_{10}, 3]$
{GRK, Gbg}	{BAR, Iso}	$[p_4, p_5, t_{30}, 3]$
{GRK, Gbg}	{GRK}	$[p_4, p_{21}, t_7, 3]$
{GRK, Gbg}	{Gbg}	$[p_4, p_{17}, t_7, 3]$
{AC}	{AC, Gs}	$[p_{19}, p_0, t_{17}, 4]$
{AC}	{cAMP}	$[p_{19}, p_{28}, t_{19}, 4]$
{cAMP}	{cAMP, PKA}	$[p_{28}, p_{34}, t_{40}, 4]$, $[p_{28}, p_{31}, t_{34}, 4]$, $[p_{28}, p_{32}, t_{36}, 4]$, $[p_{28}, p_3, t_{38}, 4]$
{GRK}	{BAR, Iso}	$[p_{21}, p_5, t_{20}, 4]$
{GRK}	{GRK, Gbg}	$[p_{21}, p_4, t_6, 4]$
{cAMP, PKA}	{PKA}	$[p_{34}, p_{35}, t_{41}, 5]$
{cAMP, PKA}	{PDE}	$[p_{31}, p_{30}, t_{21}, 5]$
{cAMP, PKA}	{PTP}	$[p_{31}, p_{25}, t_{16}, 5]$
{cAMP, PKA}	{BRaf}	$[p_{31}, p_{16}, t_9, 5]$
{cAMP, PKA}	{cAMP}	$[p_{34}, p_{28}, t_{41}, 5]$, $[p_{32}, p_{28}, t_{37}, 5]$, $[p_3, p_{28}, t_{39}, 5]$, $[p_{31}, p_{28}, t_{35}, 5]$
{BRaf}	{MEK}	$[p_{16}, p_{15}, t_{22}, 6]$
{PKA}	{cAMP, PKA}	$[p_{35}, p_{34} t_{40}, 6]$
{PDE}	{cAMP}	$[p_{30}, p_{20}, t_1, 6]$, $[p_6, p_{20}, t_5, 7]$
{PTP}	{MAPK}	$[p_{25}, p_{23}, t_{23}, 6]$, $[p_{24}, p_{23}, t_{24}, 7]$
{MEK}	{MAPK}	$[p_{15}, p_{13}, t_8, 7]$

Table S2: The edges of the interaction graph of the Petri net N_{GPCR} with the source vertex, the target vertex and the associated quadruplets. Each quadruplet corresponds to a different edge between the same source and target. In red, the edges that are removed by the signaling segments rule.

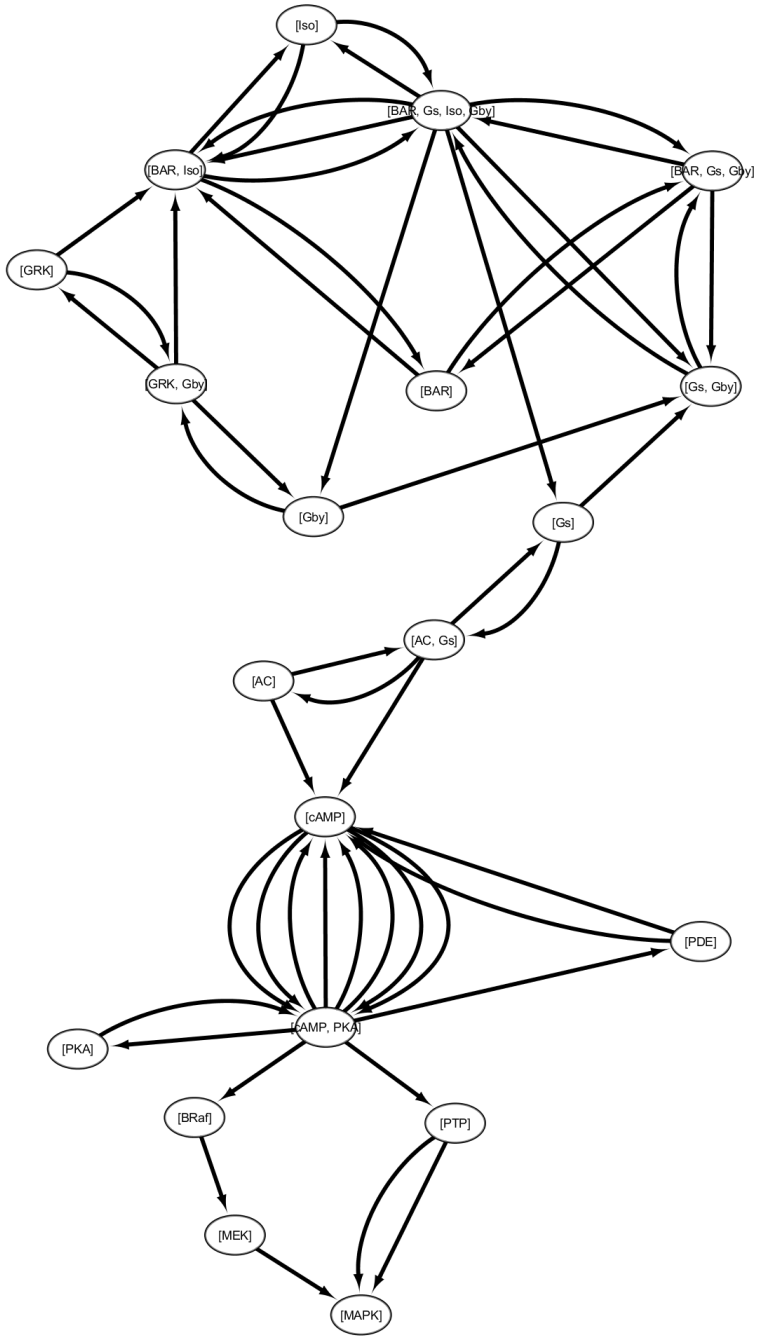

Figure S1: The interaction graph of the Petri net N_{GPCR} as it is initially created by the first rule of the second phase of the algorithm with its vertices and their associated p-invariants. Table S2 lists the quadruplets associated with the edges of the graph.

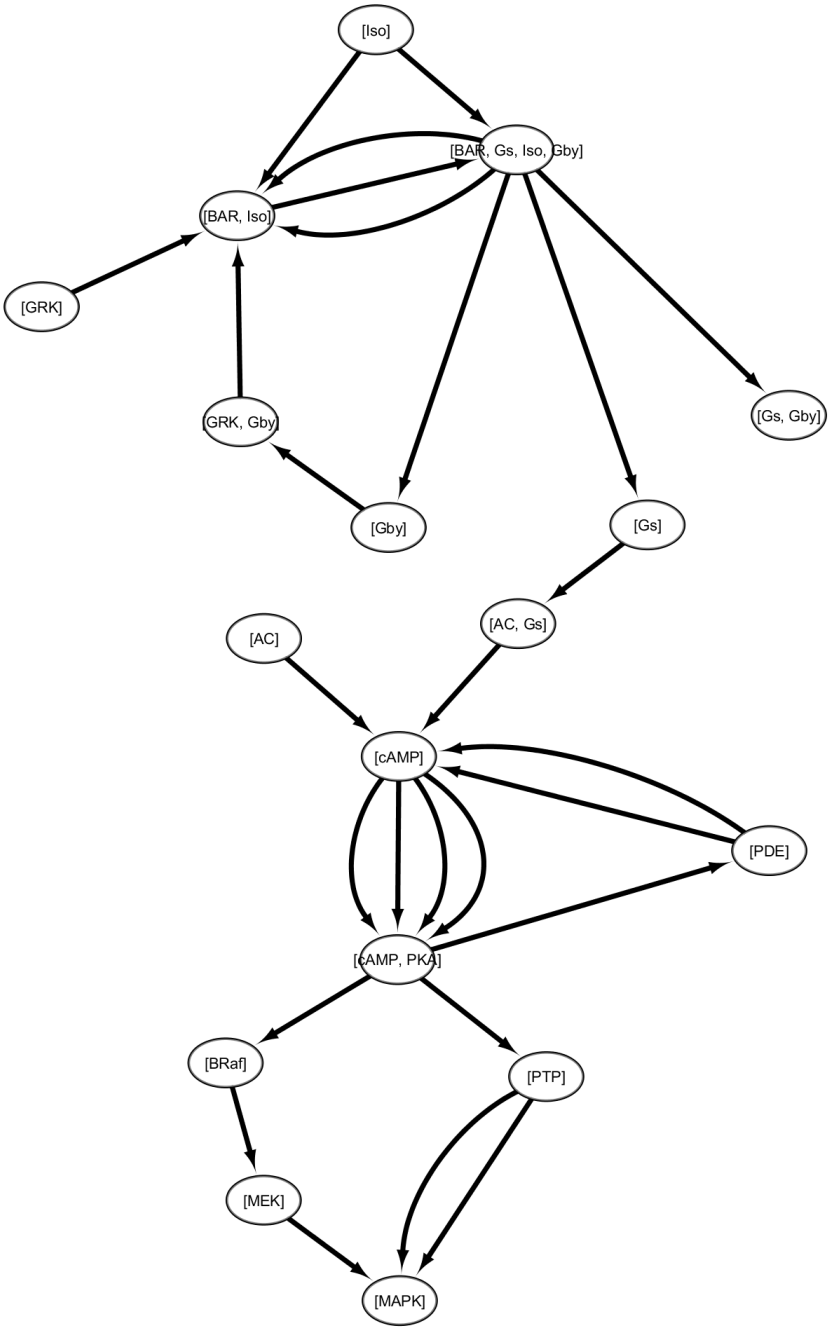

Figure S2: The interaction graph of the Petri net N_{GPCR} after some edges are removed by the application of the signaling segments rule.

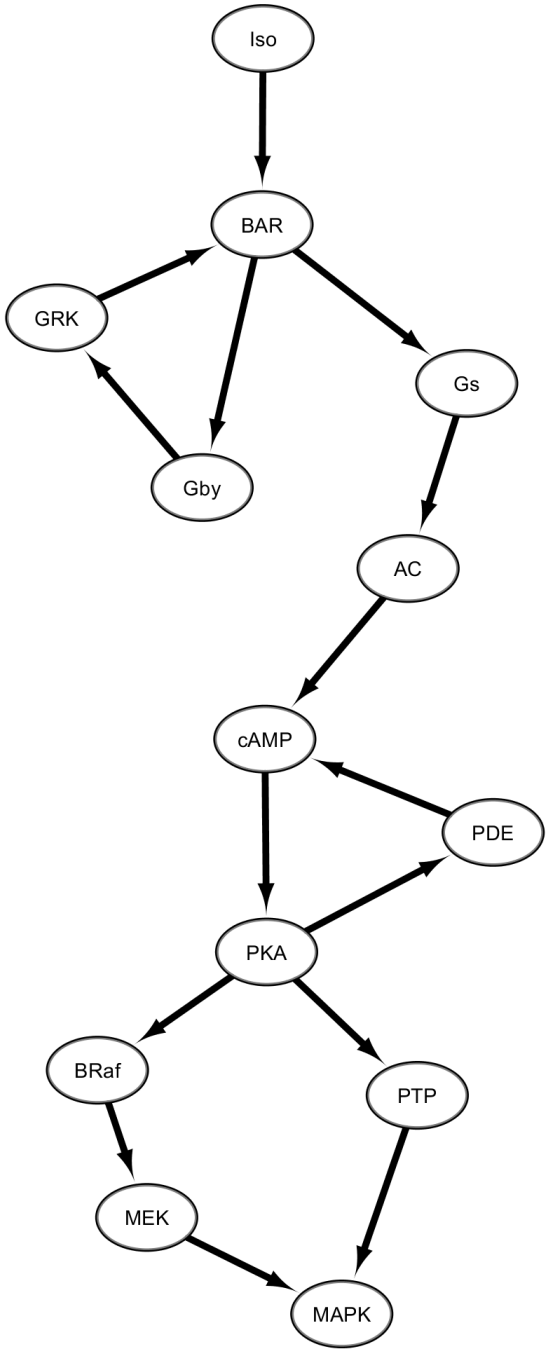

Figure S3: The unnanotated influence graph of the Petri net N_{GPCR} after the execution of the third rule of the second phase of the algorithm.