Homosensory and heterosensory dishabituation engage distinct circuits in Drosophila

Charonitakis, A[1]., Pasadaki, S[1,2], Georganta, E-M[1], Foka, K[1,3], Semelidou, O[1,4,5]* and Skoulakis, EMC[1]*

[1]Institute for Fundamental Biomedical Research. Biomedical Sciences Research Center "Alexander Fleming" Vari 16672 Greece

[2]Current address: University of Crete, Medical School, Division of Basic Sciences, Heraklion 71003 Crete, Greece

[3]Current address: Department of Fundamental Neurosciences, University of Lausanne, 1005 Lausanne, Switzerland

[4, 5] Current address: [4]INSERM, U1215 Neurocentre Magendie, 33077, Bordeaux, France
[5]University of Bordeaux, 33000, Bordeaux, France

* **Correspondence:** ourania.semelidou@inserm.fr
skoulakis@fleming.gr

Abstract

Abstract

Habituation, the adaptive reduction of responsiveness to repetitive inconsequential stimuli and dishabituation, the reinstatement of the naïve reaction after exposure to a potent novel stimulus are conserved fundamental neuroplasticity processes thought to underlie salience filtering and selective attention. Dishabituation is routinely used to differentiate *bona fide* habituation from fatigue. However, the mechanisms engaged to drive dishabituation remain largely debatable as to whether the novel dishabituating stimulus elicits sensitization of the habituated circuits, or it engages distinct neuronal routes to bypass habituation reinstating the naïve response. Using the established olfactory habituation paradigm in Drosophila, we examined whether dishabituators of the same sensory modality as the habituated stimulus (homosensory) or of a different one (heterosensory) engage distinct, converging, or the same neuronal circuits to reinstate the naïve avoidance response following habituation to an odorant (3-octanol). We demonstrate that dopaminergic inputs via the PAM and PPL1 clusters differentiate the homosensory and heterosensory dishabituators respectively, converge onto and recruit the Mushroom Bodies (MBs) into a distinct dishabituation circuit than that driving habituation, which is MB-independent. GABAergic neurotransmission to the MB from APL neurons is specifically required for homosensory dishabituation, likely to differentiate the olfactory habituating and dishabituating stimuli. Dishabituator-driven activation of the MBs elicits neurotransmission from their γ neurons onto GABAergic MB output neurons (MBONS), relaying signals to bypass the inhibition of OCT avoidance established in the Lateral Horn (LH) by habituation. Because distinct circuitries are engaged for habituation and dishabituation, our results strongly suggest that both homosensory and heterosensory stimuli drive dishabituation by recruiting habituation-independent circuitry to modulate the activity of the LH and reinstate the naïve response.

Introduction

Animals alter their responses to adapt to ever-changing environments focusing on important stimuli for survival and reproduction, while ignoring continuous or repetitive stimuli. Habituation is the sum of processes that allow this salience filtering, manifested as attenuated responses to familiar predictable percepts. The attenuated response to habituated percepts can be reinstated to the innate naïve reaction by presentation of novel or unexpected stimuli which activate processes collectively known as dishabituation (Thompson and Spencer 1966, Rankin, Abrams et al. 2009). Dishabituation is a manifestation of behavioral plasticity and a cardinal characteristic of habituation, differentiating it from sensory fatigue or adaptation (Rankin, Abrams et al. 2009). In nature, dishabituation is likely vital for survival from sudden potentially threatening stimuli appearing in a familiar or invariable context. In that sense, expedient and efficient dishabituation cannot rely only on a single sensory input route, but rather on assessment and response to unfamiliar stimuli from different sensory modalities which alter the context invariability habituated to.

Initial studies in *Aplysia* were consistent with the "dual-process theory" (Groves and Thompson 1979), where response recovery due to dishabituation appeared to result from sensitization superimposed on habituation, thus driving reversal of the attenuated response (Carew, Castellucci et al. 1971, Hochner, Klein et al. 1986, Marcus, Nolen et al. 1988, Ghirardi, Braha et al. 1992, Cohen, Kaplan et al. 1997, Antonov, Kandel et al. 1999, Hawkins, Cohen et al. 2006). However, later studies in leeches, rats, and humans propose that dishabituation is independent of sensitization. The comparator view emerging from these studies posits that by not matching the habituated percept, the novel stimulus triggers processes that reverse or bypass habituation (Ehrlich, Boulis et al. 1992, Smith, Shionoya et al. 2009, Steiner and Barry 2011, Steiner and Barry 2014, Trisal, Aranha et al. 2022).

Genetic investigations of dishabituation in *C. elegans* revealed that glutamatergic neurotransmission is required for both habituation and dishabituation to mechanical stimuli (Rankin and Wicks 2000). In contrast, dishabituation of odor-evoked bradycardia in rats depends on norepinephrine β-receptors and their antagonistic interaction with the metabotropic glutamate receptors that mediate synaptic depression leading to habituation (Smith, Shionoya et al. 2009). These results are consistent with two alternative hypotheses. Processes underlying dishabituation may engage distinct circuits than those driving response attenuation, thus bypassing habituation by re-activating processes driving the naïve reponse. Alternatively, dishabituating stimuli may activate neuronal circuits that converge with the neurons mediating habituation to persistent inconsequential stimuli, thus modifying their responses. If indeed distinct circuits are engaged to attenuate and to reinstate a response, then dishabituation would appear to bypass habituation rather than re-activate processes driving the naïve response.

Capitalizing on its advanced molecular and classical genetics, elucidated brain connectome (Winding, Pedigo et al. 2023, Schlegel, Yin et al. 2024) and broad behavioral repertoire, Drosophila has been employed to investigate the circuits and molecular mechanisms driving habituation and its relationship to human conditions such as autism and schizophrenia (Coll-Tane, Krebbers et al. 2019, Fenckova, Blok et al. 2019, Foka, Georganta et al. 2022). We have established a habituation paradigm (Semelidou, Acevedo et al. 2019) to define the neural circuits mediating habituation to continuous odor exposure for 4 minutes. We demonstrated that habituation to persistent olfactory stimulation (Fig 1A) is driven by inhibitory olfactory projection neurons (iPNs) that apparently modulate the output of neurons in the area of the adult Drosophila protocerebrum, known as the Lateral Horn (LH), leading to attenuation of osmotactic responses (Semelidou, Acevedo et al. 2018). Avoidance of the continuous odor stimulus prior to habituation is maintained by signals from excitatory olfactory projection neurons (ePNs) innervating both the LH and the center of learning and memory, the Mushroom Bodies (MBs). The MBs receive and gate responses to stimuli from different sensory modalities including LH-mediated osmotaxis (Modi, Shuai et al. 2020, Vrontou, Groschner et al. 2021). They are bilateral clusters of about 2000 neurons in the dorsal posterior of the adult Drosophila brain with distinct axonal morphology. The axons of the αβ and α′β′types of MB neurons (MBns) bifurcate with the α and α′ branches forming vertical lobes and the β and β′branches contributing to horizontal lobes. The axons of the γ neurons remain fasciculated and project horizontally (Crittenden, Skoulakis et al. 1998).

Whereas the circuitries and mechanisms that drive habituation in different organisms and systems are well-studied, their counterparts driving dishabituation remain largely unexplored. Given our understanding of olfactory habituation in Drosophila (Semelidou, Acevedo et al. 2018, Semelidou, Acevedo et al. 2019), we aimed to elucidate dishabituation circuits and mechanisms driving dishabituation in this paradigm.

As proposed (Thompson and Spencer 1966), dishabituation is mediated by a potent stimulus distinct than the one habituated to. Consistently, a single mild electric footshock was used to dishabituate flies from habituation to prolonged 3-Octanol (OCT) exposure (Semelidou, Acevedo et al. 2018). Because footshocks are perceived as mechanosensory stimuli (Acevedo, Froudarakis et al. 2007), engaging a distinct sensory modality than olfaction, we refer to them as heterosensory dishabituators. Surprisingly, a brief puff of yeast odor (YO) was also an effective dishabituator (Semelidou, Acevedo et al. 2018) from OCT habituation. This raised the question of whether YO is a homosensory olfactory dishabituator, or engages another sensory modality such as taste, thus acting as a heterosensory stimulus. In support of the latter, because YO signifies food to the flies, it may embed an attentional component and attention-drawing stimuli have been linked to increased dishabituation in humans

(Kavšek 2013, Hofrichter, Siddiqui et al. 2021). Moreover, habituation to recurrent footshocks (Acevedo, Froudarakis et al. 2007) is readily reversed by the heterosensory YO (Roussou, Papanikolopoulou et al. 2019, Foka, Georganta et al. 2022), but the homosensory mechanosensory vortexing is not an effective dishabituator (Acevedo, Froudarakis et al. 2007). This in turn suggests that homosensory dishabituators may not be effective and is consistent with the notion that dishabituation may require distinct neuronal circuits than those engaged by the habituated stimulus.

Therefore, we wondered whether YO acts as a homosensory dishabituator and whether both heterosensory and homosensory stimuli can efficiently dishabituate flies habituated to OCT. If so, is the circuitry mediating heterosensory dishabituation distinct, or partially shared by homosensory dishabituators? If homosensory and heterosensory dishabituators converge on neurons other those driving OCT response attenuation (Semelidou, Acevedo et al. 2018), it would provide critical insights on whether dishabituation modulates the habituation circuitry or bypasses the habituating inputs, reactivating processes that drive avoidance. To address these questions neurotransmission was modulated through genetic and optogenetic tools within the adult Drosophila brain during homosensory and heterosensory dishabituation.

RESULTS

Yeast puff is an efficient homosensory dishabituator.

To investigate the circuitry and mechanism(s) of homosensory and heterosensory dishabituation, we employed the olfactory paradigm we have established (Semelidou, Acevedo et al. 2018), because the neuronal circuits engaged for habituation are well-mapped and understood (Fig 1A and (Semelidou, Acevedo et al. 2018)). Initial results indicated that exposure to yeast odor (YO), dishabituated flies after prolonged exposure to OCT (Semelidou, Acevedo et al. 2018) and in animals with habituated proboscis extension reflex (Trisal, VijayRaghavan et al. 2023). However, stimulus generalization is one of the characteristics of habituation (Thompson and Spencer 1966) and brings to question whether an odor can be an efficient dishabituator of animals habituated to another odor. Therefore, we asked whether YO is perceived as an odor, hence a homosensory dishabituator, or via another sensory modality.

Because YO has been used to dishabituate flies after the extended 30-min exposure to odorants (Das, Sadanandappa et al. 2011, Semelidou, Acevedo et al. 2018), initially we asked whether YO can dishabituate flies after the short 4-min OCT exposure protocol (Semelidou, Acevedo et al. 2018, Semelidou, Acevedo et al. 2019). In confirmation of prior results, a 5-sec YO puff following 4-min exposure to OCT sufficed to drive dishabituation in control flies (Fig 1B, C) as reported before (Semelidou, Acevedo et al. 2018). We used the highly effective single footshock heterosensory dishabituator (Semelidou, Acevedo et al. 2018) as a control. Therefore, YO is an efficient dishabituator of olfactory habituation. Because the results with Canton S and Cantonized-w^{1118} animals were identical, only the latter strain was used as a control in all subsequent experiments.

Is the YO puff a homosensory dishabituator indeed? If so, it should engage the olfactory system to drive dishabituation. In the antennal lobe, the primary olfactory brain area in insects, excitatory Projection Neurons (ePNs), relay odor information to higher brain areas including the MBs and LH (Fig 1A). The predominantly GABAergic Inhibitory Projection Neurons (iPNs) innervate only the LH, contributing to feedforward inhibition (Wang, Gong et al. 2014), and playing a crucial role in habituation (Ramaswami 2014, Semelidou, Acevedo et al. 2019). To ascertain that YO is perceived solely as an olfactory stimulus, rather than gustatory or via another sensory modality, anosmic *Orco* mutant flies (Larsson, Domingos et al. 2004) were exposed to OCT and YO. Whereas control flies exhibited typical avoidance responses to 90-sec exposures to both odorants, *Orco* flies remained unresponsive to both (Fig 1D and Suppl Fig 1A). Moreover, similar to w^{1118} flies, *Orco* mutants habituated readily to recurrent mechanosensory electric footshocks (Acevedo, Froudarakis et al. 2007), but failed to dishabituate with a YO puff unlike control animals (Fig 1E and Suppl. Fig 1B).

Therefore, like OCT, YO is a *bona fide* olfactory stimulus and acts as an efficient homosensory dishabituator.

Provided the nutritional value of yeast for Drosophila, is YO an attractive stimulus driving dishabituation of the aversive OCT? To determine its valence, the innate responses of control flies to YO were assessed. Interestingly, YO was mildly attractive for a 5-sec exposure, a 10-sec pulse was neutral to slightly aversive, whereas at 90 sec, the odor was clearly aversive (Figure 1F). In contrast, a 5 or a 10-sec puff of OCT were clearly aversive, becoming highly aversive upon a 90-sec exposure (Fig 1G). Therefore, unlike the consistently aversive OCT, YO has a rewarding/appetitive valence at the 5-sec exposure that is typically used to dishabituate OCT ({Semelidou, 2018 #4;Feng, 2021 #228}, Figure 1B,C) and recurrent footshocks (Foka, Georganta et al. 2022). However, the valence of the dishabituator does not appear essential for its efficacy as flies habituated to the aversive extended YO exposure readily dishabituated by the also aversive 5-sec OCT puff (Fig 1H). Importantly, homosensory dishabituation does not require the odorants to be of opposing valence. Two aversive odorants, engaging the same overall sensory route to higher brain areas (Fig 1A and (Semelidou, Acevedo et al. 2018)), can be effective habituator/dihabituator pair. Therefore, the novelty rather than the valence of the dishabituator relative to that of the stimulus habituated to impacts its efficiency. Collectively then, flies reinstate their naïve avoidance of OCT, by experiencing heterosensory footshock stimuli, but significantly also via homosensory olfactory stimuli, independent of their valence.

The Mushroom Body neurons mediate heterosensory and homosensory dishabituation

Do homo- and heterosensory dishabituators engage distinct neuronal circuits to reinstate the naïve response? Prior work demonstrated that silencing all MB neurons (MBns), does not affect habituation to OCT, but impairs dishabituation with a single footshock (Semelidou, Acevedo et al. 2018). This conclusion was verified by conditionally silencing all MBns by expressing the temperature sensitive dynamin Shibire^{ts} (Shi^{ts}) (Kitamoto 2001) under the pan-MB driver dncGal4. At the permissive 25°C, Shi^{ts} expression did not impair habituation or dishabituation either by footshock or YO (Fig 2B). In contrast, silencing MB neurotransmission at the restrictive temperature suppressed both homosensory and heterosensory dishabituation as OCT avoidance remained attenuated (Fig 2B). Importantly, control heterozygotes exhibited normal dishabituation to both dishabituators at the restrictive temperature indicating that the induction regime did not interfere with normal behavior (Fig 2E). Therefore, neurotransmission from MBns is necessary both for homosensory and heterosensory dishabituation.

To determine whether MBns are also sufficient to drive dishabituation, we elicited efferent neurotransmission immediately after the 4-min habituating exposure to OCT by photostimulation of

flies expressing therein the light-sensitive Channel Rhodopsin-encoding ChR2XXL transgene. To ascertain that the level of elicited MB activity did not yield artefacts due to subthreshold or excess activation, we assessed aversion to OCT after exposure to three different light intensities produced at power settings of 4.5, 5 and 6V. Photoactivating the MBs with all three intensities resulted in recovery of OCT avoidance, behaviorally indistinguishable from that elicited either by the footshock or YO dishabituators (Fig 2C). Importantly, photoactivation itself did not alter OCT avoidance of ChR2XXL-expressing naïve flies (Fig 2D), although as for dishabituation (Fig 2C), exposure to the higher light intensity resulted in slight (p=0.05, see Suppl Table 1) reduction of OCT avoidance. Therefore, neurotransmission from the MBs is sufficient to drive dishabituation without affecting OCT avoidance *per se.* Therefore, afferent MBn neurotransmission is important for post-habituation reinstatement of the naïve response of OCT avoidance.

Blue light is used to activate the ChR2XXL protein and it is visible to flies. Therefore, we tested the possibility that the apparent dishabituation was not consequent of MB activation, but rather due to light stimulation itself. To control for this possibility, flies heterozygous for the driver that do not express ChR2XXL protein were tested for light-induced reversal of the attenuated OCT avoidance. While these flies habituated to OCT and dishabituated both by footshock and a YO puff, blue light exposure did not affect habituation (Fig 2F) or OCT avoidance in naïve flies (Fig 2G). Similar results were obtained with control strains and with flies that carry, but not express the ChR2XXL transgenes (Suppl Fig 2A-H) and are siblings to the experimental flies above (Fig 2F,G). Therefore, the blue light used to photoactivate ChR2XXL-expressing neurons does not itself act as a dishabituator.

Because it emulates efferent activity, photoactivation of MBs, or any other neuronal type assayed below, does not inform on the inputs that activate these neurons. However, in combination with the silencing experiments, strongly supports the conclusion that afferent MB neurotransmission is necessary and sufficient for both homosensory and heterosensory dishabituation in OCT-habituated animals. Since the MBns are not necessary during habituation, these results support the hypothesis that dishabituators recruit untapped neuronal subsets, reinstating the naïve responses while bypassing habituation circuits.

Differential roles of MB neuronal subsets in olfactory habituation and dishabituation

Each of the two bilaterally symmetrical MBs consists of ~990 αβ, ~350 α′β′and ~675 γ MBns (Crittenden, Skoulakis et al. 1998, Aso, Hattori et al. 2014), which are further subdivided into functional compartments (Aso, Hattori et al. 2014), which are differentially engaged in processes underlying olfactory learning and memory (Yu, Akalal et al. 2006, Krashes, Keene et al. 2007, Blum, Li et al. 2009, Zhang and Roman 2013, Aso, Hattori et al. 2014). Furthermore, MBn subsets have been

reported to play distinct roles in latency to habituate to OCT (Semelidou et al., 2018) and to recurrent footshocks (Acevedo, Froudarakis et al. 2007, Roussou, Papanikolopoulou et al. 2019, Foka, Georganta et al. 2022). Since MBns are necessary to drive dishabituation both with heterosensory and homosensory dishabituators (Fig 2), we wondered whether distinct MBn subsets are differentially engaged by homosensory and heterosensory dishabituation.

To address this question, we initially conditionally silenced each MBn subset via Shi^{ts} expression. Blocking neurotransmission from αβ neurons (Fig 3A), was permissive to habituation and did not affect dishabituation either via footshock, or YO exposure (Fig 3B). This suggests that these neurons do not contribute to olfactory habituation as reported (Semelidou et al., 2018), or to homosensory and heterosensory dishabituation. Surprisingly however, photostimulation of αβ MBns with all three light intensities reinstated the aversive osmotactic response in OCT-habituated flies (Fig 3C). OCT avoidance in naïve animals was not affected by photoactivation of these neurons (Fig 3D). Similar results were obtained with a second αβ MBn driver, c739Gal4 (Suppl Fig 3B-D). These results indicate that αβ silencing does not eliminate homosensory or heterosensory dishabituation likely because another MB subset is functionally redundant and able to drive dishabituation. Alternatively, αβ neurons have a supporting role to another MB subset in driving dishabituation. In support of these interpretations, strong αβ photoactivation sufficed to drive dishabituation (Fig 3C). This outcome may occur because whether redundant or supportive, strong αβ activation can drive dishabituation irrespective of the activation state of other MBns contributing to the process.

In contrast to αβ MBns, blocking neurotransmission specifically from their α′β′ counterparts (Fig 3E) under two different Gal4 drivers, VT030604Gal4 (Fig 3F) and c305aGal4 (Suppl. Fig 3F), attenuated avoidance, such that habituation and therefore dishabituation could not be assessed. To potentially bypass this issue, we expressed ChR2XXL in α′β′ MBns, which did not interfere with habituation to OCT and dishabituation either by footshock or YO (Fig 3G and Suppl Fig 4G). However, α′β′ MBn photostimulation did not suffice to reinstate OCT avoidance in habituated flies (Fig 3G and Suppl Fig 3G), suggesting that these neurons do not contribute to the process. However, in naïve animals, strong α′β′ activation reduced OCT avoidance suggestive of a potential role in osmotaxis, (Fig 3H and Suppl Fig 3H), rather than dishabituation. Taken together, these results indicate that neurotransmission from α′β′ MBns is not essential for dishabituation.

Similar to results from αβ neurons, silencing γ MBns (Fig 3I) did not affect habituation to OCT, or dishabituation upon footshock or YO exposure (Fig 3J, Suppl Fig 4J). However, unlike for αβ MBns, photoactivation of γ neurons in OCT-habituated flies drove dishabituation only at the higher stimulus intensities (Fig 3K, Suppl Fig 4K). Consistent with the notion that strong activation of γ neurons drives dishabituation specifically, OCT avoidance of naïve flies remained unaffected (Fig 3L, Suppl Fig 3L).

Collectively then, silencing all MBns (Fig 2) impairs dishabituation, but attenuating neurotransmission either from αβ or γ MBns does not (Fig 3) and α′β′ neurons are not involved in the process. These results indicate that αβ and γ MBns have redundant or additive roles in mediating dishabituation, each sufficient to drive dishabituation, albeit it with different activation thresholds as suggested by their intensity-dependent photoactivation-driven reinstatement of OCT avoidance (Fig 3). Because more intense γ MBn activation is required to drive dishabituation, it is possible that under physiological conditions dishabituation requires concurrent activity of αβ neurons as well.

Inputs to the MBs from distinct Dopaminergic neurons drive homosensory and heterosensory dishabituation.

Taken together the results above support the notion that stimuli converging on the MBs are sufficient to drive dishabituation. Dopaminergic neurons (DANs) are known to innervate the MBs (Fig 4A) and to relay footshock and sugar reward-reinforcing stimuli in associative learning paradigms (Mao and Davis 2009, Waddell 2013, Aso, Hattori et al. 2014, Davis 2023). Since MBns do not play a role in habituation, but are differentially involved in mediating dishabituation, we asked whether in accord with learning, dopaminergic neurons relay dishabituating stimuli to the MBs.

To determine whether DANs are involved in dishabituation, we initially conditionally silenced all dopaminergic neurons under the pan-DAN driver pleGal4 (Fig 4A). While avoidance and habituation to OCT were not affected upon silencing of all DANs, dishabituation was abrogated, via both footshock and YO (Fig 4D). Therefore, dopaminergic signals are not necessary for avoidance or habituation to OCT, but rather for homosensory and heterosensory dishabituation. Accordingly, photoactivating all DANs in habituated animals resulted in reinstatement of OCT avoidance at the higher, but not the low light intensities (Fig 4E). Pan-DAN photoactivation in naïve flies did not alter their OCT avoidance (Fig 4F). Habituation and dishabituation were also unaffected in driver heterozygote controls (Suppl Fig 5A). Therefore, both footshock and YO dishabituators are relayed to the MBs by dopaminergic neurotransmission.

Because a 5-sec YO puff is attractive (Fig 1F), we wondered whether this stimulus is relayed via the PAM cluster of DANs (Fig 4B), known to transmit reward signals to the MBs in conditioning tasks (Waddell 2013, Davis 2023). PAM-DANs can be effectively targeted using the 0273Gal4 driver, which is expressed in all 130 neurons within this cluster (Burke, Huetteroth et al. 2012). Conditional silencing of PAM-DANs did not affect avoidance or OCT-habituation, but specifically abrogated dishabituation with YO, without impacting footshock dishabituation (Fig 4G). In contrast, habituation and dishabituation were unaffected in driver and Shi^{ts} heterozygotes assayed in yoked experiments (Suppl Fig 5B). Interestingly, photoactivation of PAM-DANs in habituated flies resulted in restoration

of OCT avoidance only at the highest activation intensity (Fig 4H). This increase in OCT avoidance emulated dishabituation as it was specific to habituated flies, as photoactivation at all intensities did not impact OCT avoidance in naïve flies (Fig 4I). Taken together these results indicate that robust PAM-DAN activity transfers information of the appetitive YO stimulus to the MBs, thus driving homosensory dishabituation. The necessity for intense PAM-DAN photoactivation to trigger dishabituation (Fig 4H) indicates that only intensely attractive or appetitive stimuli may be efficient dishabituators, or that additional inputs are necessary to make the process efficient.

Conversely, are the PPL-DANs which convey the footshock stimuli for associative learning (Davis 2023), differentially involved in heterosensory dishabituation? Attenuation of neurotransmission from the PPL1 cluster (Fig 4C) under MB504BGal4 (Aso, Hattori et al. 2014, Otto, Pleijzier et al. 2020) did not affect OCT avoidance or habituation, but rather selectively abrogated heterosensory dishabituation (Fig 4J). Habituation and both types of dishabituation remained unaffected in driver and Shi^{ts} heterozygotes in parallel yoked experiments (Suppl Fig 6C). Surprisingly, photostimulation of PPL1-DANs in OCT-habituated animals resulted in restoration of avoidance only at the lower intensity (Fig 4K). This increase in OCT avoidance appears to be dishabituation because photoactivation at all light intensities in naïve animals (Fig 4L), or silencing these neurons (Fig 4J), did not impact OCT avoidance. Is this emulation of footshock-mediated dishabituation by PPL1 activation specific to OCT habituation or generalized over other odorants? To address this question, flies were habituated by 4-min exposure to the also aversive YO and dishabituated with a 5-sec OCT puff (Suppl Fig 5D). Interestingly, photoactivation of PPL1-DANs recovered, albeit partially, YO avoidance at the low light intensity (Suppl Fig 5D). Therefore, PPL1 activation conveys information of a heterosensory dishabituator for both OCT and YO and most likely habituation to odors in general.

The collective results therefore illustrate that homosensory dishabituation with the attractive YO puff is mediated by robust activation of PAM-DANs, while heterosensory dishabituation with an aversive footshock relies on more moderate neurotransmission from the PPL1 neurons. It is possible that robust PPL1 signals to the MBs may lead to synaptic depression as described for negatively reinforced associative learning (Hige, Aso et al. 2015, Perisse, Owald et al. 2016), a condition that could suppress dishabituation as suggested in Figure 4K. Alternatively, distinct neurons within the PPL1 cluster could promote dishabituation, while others with higher activation thresholds may suppress it. Such PPL1 neurons may project to different MB compartments (Aso, Siwanowicz et al. 2010, Aso, Hattori et al. 2014), facilitating circuit-level regulation. Indeed, the γ2α′1 and γ1pedc neurons of this subset were previously reported as positive regulators of aversive Long Term Memory consolidation (Plaçais, Trannoy et al. 2012, Feng, Weng et al. 2021), while the α2α′2 and α3 PPL1 neurons were shown to interfere with this process (Feng, Weng et al. 2021).

Differential engagement of neurons within the PPL1 cluster in heterosensory dishabituation.

The PPL1-DANs are functionally diverse (Sareen, McCurdy et al. 2021) and modulate behavioral outputs context-specifically (Siju, Štih et al. 2020). We capitalized on the specificity of extant Gal4 drivers (Feng, Weng et al. 2021), to investigate whether compartmentalized PPL1 outputs are reflected in the differential photoactivation outcomes (Fig 4K). Activity of the γ2α′1, γ1pedc PPL1-DANs promotes associative memory, while neurotransmission from α2α′2, α3 PPL1-DANs was shown to interfere with the process (Feng, Weng et al. 2021). Because these neurons arborize on the α and γ MBns, which contribute to dishabituation (Fig 3B,E) and apparently promote different outcomes, we assessed their role(s) in heterosensory dishabituation.

Each of these DANs was photostimulated in OCT-habituated flies under the specific MB630B, MB058B, MB320C and MB296B Gal4 drivers (Feng, Weng et al. 2021). Post-habituation activation of the γ2α′1 DAN (Fig 5A), resulted in reinstatement of OCT avoidance at the lower, but not the higher light intensity (Fig 5B), in accord with activation of the entire PPL1 cluster (Fig 4K). Surprisingly, robust γ2α′1 activation in naïve flies resulted in highly decreased of OCT avoidance to same degree as in habituated animals (Fig 5C). Thus, intense activity of these γ2α′1 PPL1 neurons suppresses OCT avoidance. As for γ2α′1, photoactivation of γ1pedc DANs (Fig 5D) in habituated flies sufficed to restore avoidance partially at the lower, but not the higher activation intensities (Fig 5E). In addition, OCT avoidance in naïve flies was significantly reduced upon robust γ1pedc activation (Fig 5F). Therefore, neurotransmission from both γ2α′1 and γ1pedc neurons appears sufficient to drive heterosensory dishabituation, but strong activation of both of these DANs suppresses avoidance of OCT.

Because dishabituation is manifested as restoration of avoidance, the robust decrease of OCT avoidance likely masks any effect that strong γ2α′1 and γ1pedc activation would have on dishabituation (Fig 5B, E). A similar intensity dependent suppression of avoidance in naïve animals was observed upon activation of α′β′ MBns (Fig 3H). Thus, it is possible that γ2α′1 activation at high light intensities recruits the α′neurons and reduces OCT avoidance. Conversely, activation of γ neurons at lower intensities drives dishabituation as indicated above (Fig 3K).

In contrast, photostimulation of α2α′2 (Fig 5G) and α3 (Fig 5J) PPL1-DANs in habituated animals was not sufficient to drive dishabituation at any intensity (Fig 5H,K) and did not affect OCT avoidance in naïve flies (Fig 5I,L). The proximity of α2α′2 and α3 PPL1 neurons with γ2α′1 and γ1pedc (Feng, Weng et al. 2021), suggests that these results are unlikely due to their inefficient photoactivation. Therefore, α2α′2 and α3 PPL1 DANs do not appear to contribute to dishabituation and indicates that photostimulation of any neuronal type impinging on the MBs does not suffice to drive dishabituation. Rather, heterosensory dishabituation requires moderate neurotransmission

from specific DANs of the PPL1 cluster, that in turn engage particular MB compartments. The arborizations of γ2α′1, γ1pedc onto the MBs (Fig 5A, D) and the similar response profile upon their activation (Fig 4K), is consistent with the proposed dominant role of γ MBns in driving heterosensory dishabituation.

APL neurons regulate homosensory dishabituation through GABAergic neurotransmission

While DANs innervate specific compartments, additional afferent neurons impinge upon the MBs (Keene, Krashes et al. 2006, Liu and Davis 2009, Chen, Wu et al. 2012). We hypothesized that activity of such broadly arborizing neurons may act synergistically with dopaminergic signals to regulate, or fine-tune input onto the MBs and/or regulate their output. Therefore, we asked whether additional neuronal subsets that ramify onto the MBs contribute to homosensory or heterosensory dishabituation. Preliminary screens demonstrated that inhibition of Dorsal Anterior Lateral (DAL) and Dorsal Paired Medial (DPM) neurons did not affect habituation to OCT or dishabituation (not shown). However, silencing the bilaterally symmetrical Anterior Paired Lateral (APL) interneurons (Fig 6A), suppressed specifically homosensory, but not heterosensory dishabituation, while OCT avoidance and habituation were not affected (Fig 6B).

The APL neurons innervate broadly the MBs (Fig 6A), engaging all MBn types and can be activated by footshocks and odors (Liu and Davis 2009). Their activity regulates odor-evoked MBn neurotransmission (Prisco, Deimel et al. 2021), shaping olfactory representations therein by localized feedback inhibition (Amin, Apostolopoulou et al. 2020). Therefore, these neurons could modulate incoming dopaminergic stimulation and/or regulate MB output. In fact, silencing APL neurons attenuated specifically homosensory dishabituation (Fig 6B) and in accord to their regulation of MB responses to odorants (Amin, Apostolopoulou et al. 2020, Prisco, Deimel et al. 2021). To verify this conclusion and determine whether APL activity suffices to drive dishabituation, we photostimulated these neurons in habituated flies expressing ChR2XXL therein. Activation of APL neurons resulted in restoration of avoidance in OCT-habituated flies, but only at the highest light intensity (Fig 6C), and did not affect naïve osmotactic responses (Fig 6D). Control driver heterozygotes performed as expected (Suppl Fig 6B). This activation profile suggests that although APL neurons can drive dishabituation, they either have a high activation threshold, or most likely act synergistically with other MB impinging neurons such as the PAM-DANs, which exhibit a similar activation profile (Fig 5G). This putative requirement for synergism may be obviated with intense photostimulation, bypassing the contribution of additional neurons.

Since APL neurons are both GABAergic and Octopaminergic (Wu, Shih et al. 2013), we wondered which of the two neurotransmitters mediates homosensory dishabituation. To address this

question, we used RNA interference to downregulate adult-specifically the rate-limiting enzymes in Octopamine and GABA biosynthesis within APL neurons. Attenuation of glutamic acid decarboxylase (Gad) under APLGal4;Gal80^{ts} to attenuate GABA synthesis, did not affect habituation to OCT and dishabituation with a single footshock, but remarkably, dishabituation with YO was impaired (Fig 6E). Control heterozygotes performed as expected (Suppl. Fig 6C). Hence, APL-mediated inhibition of MBn activity is essential for homosensory dishabituation. This could be the result of APL activity-mediated differentiation of the two odors *per se*, or signaling the novelty of YO from the habituated to OCT, by local inhibition of inputs to the MBs (Amin, Apostolopoulou et al. 2020, Prisco, Deimel et al. 2021).

In contrast, downregulation of tyramine beta-hydroxylase (TBH) required for Octopamine biosynthesis, did not affect OCT avoidance, habituation and heterosensory dishabituation, but presented a very mild reduction in homosensory dishabituation (Fig 6F). The results were qualitatively recapitulated with a second independent TBH RNAi, presenting again a mild effect on homosensory dishabituation (Suppl Fig 6E and Suppl Fig 6F for control heterozygotes). Therefore, octopaminergic neurotransmission from APL neurons does not seem to contribute significantly to dishabituation.

GABAergic neurons mediate homosensory dishabituation.

Because of the APL-driven GABAergic contribution to homosensory dishabituation (Fig 6E) and the role of efferent GABAergic innervation on MB function (Masuda-Nakagawa, Ito et al. 2014, Driscoll, Buchert et al. 2021, Georganta, Moressis et al. 2021), we investigated whether this neuronal population contributes to dishabituation. However, as silencing of all GABAergic neurons under GADGal4 resulted in nearly paralyzed animals (not shown), we opted to ask the question of whether GABAergic neurotransmission is implicated in dishabituation by their photostimulation. Indeed, activation of all GABAergic neurons in OCT-habituated animals resulted in dishabituation only at the lowest intensity (Fig 6G). In contrast, strong photostimulation had the opposite effect resulting in decreased OCT avoidance to similar levels as for the habituated response (Fig 6G). Furthermore, strong pan-GABAergic photostimulation in naïve flies resulted in significantly reduced OCT avoidance (Fig 6H). Therefore, moderate GABAergic activity is implicated in OCT dishabituation. Conversely, robust activation of these neurons in habituated animals is not permissive to the process most likely because it inhibits the default OCT avoidance response even in naïve flies.

To further assess which GABAergic neurons are conveying the dishabituator signals, we focused on the mushroom body output neurons (MBONs) that relay information from γ MBns (Fig 3K , Fig 5A-F). To this end, we photostimulated the GABAergic MBON-γ3 and MBON-γ3β′1 (otherwise MBONs 8 and 9) neurons under MB110C (Aso, Hattori et al. 2014). Activation of these MBONs resulted in significantly elevated OCT avoidance relative to the habituated response, but did not attain the

avoidance levels of naïve animals (Fig 6I). In contrast, photoactivation of these MBONs in naïve animals did not affect OCT avoidance (Suppl Fig 6G). These results indicate that although MBON-γ3 and MBON-γ3β′1 are implicated in relaying dishabituating information from MBns, efficient dishabituation requires the input from additional MBONs or other afferent circuits, which are the subject of future investigations. Furthermore, because MBON-γ3 and MBON-γ3β′1 project to the Crepine area of the adult brain, apparently additional neuronal circuits, GABAergic or otherwise, are engaged in relaying signals from the MBs to the LH to reinstate OCT avoidance (Semelidou, Acevedo et al. 2018)

Specificity of the circuit and neuronal activities driving dishabituation from OCT.

Collectively, the results support the model that MBs receive signals from specific DANs that deliver information on homosensory and heterosensory stimuli relative to the habituator OCT, and drive dishabituation. However, apart from α2α′2 and α3 PPL1 DANs, photoactivation of the remaining neurons examined above sufficed to drive dishabituation in OCT-habituated flies. This raised the question of whether robust afferent neurotransmission upon intense photoactivation, of any CNS circuit suffices to reverse habituation to OCT nonspecifically, possibly even without engaging the MBs.

To address this question, we focused on Ellipsoid Body neurons-EBns (Fig 7A), which are not considered part of the broader MB circuitry and do not appear to contact the MBs directly. Conditional silencing of EBns did not affect OCT avoidance and habituation, or dishabituation either with footshocks or YO (Fig 7B). Control heterozygotes performed as expected (Suppl Fig 7A). Importantly, photoactivation of these neurons did not drive dishabituation in OCT-habituated flies at any intensity (Fig 6C) and had no effect on the aversive osmotactic response of naïve animals (Fig 7D).

Therefore, neurons not impinging on the MBs do not affect homosensory or heterosensory OCT dishabituation. The data also argue that robust neuronal activity, emulated by photoactivation, of neurons outside MB afferent and most probably efferent circuitries does not suffice to drive dishabituation. These results underscore the central role of the MBs in driving homosensory and heterosensory dishabituation to OCT and validate the specificity of our experimental manipulations and conclusions.

DISCUSSION

Behavioral plasticity manifested as flexible and adaptive responses to the numerous stimuli and contexts animals are exposed to is indispensable for survival as it impacts safety and food sourcing. Responses to repetitive or constant, hence predictable inconsequential stimuli are attenuated. This is thought to facilitate attending novel, potentially dangerous or rewarding stimuli. However, presentation of an unpredictable stimulus changes the sensory context and reinstates responsiveness to the stimuli habituated to. Dishabituation to the naïve response enables re-evaluation of the habituated stimulus in the now novel sensory context and is conducive to formation of associations between stimuli. Numerous studies have focused on mechanisms of habituation (Ramaswami 2014, McDiarmid, Yu et al. 2019), but the mechanisms underlying dishabituation remain relatively poorly understood.

Our results reveal circuits engaged by homosensory and heterosensory dishabituators to relieve attenuation of the aversive response to OCT. We hypothesized that if dishabituators engage the same circuitry as that utilized for habituation to OCT, they would probably act by re-sensitizing the attenuated aversive osmotactic response (Carew, Castellucci et al. 1971, Hochner, Klein et al. 1986, Marcus, Nolen et al. 1988, Ghirardi, Braha et al. 1992, Cohen, Kaplan et al. 1997, Antonov, Kandel et al. 1999, Hawkins, Cohen et al. 2006). Alternatively, recruitment of different circuits would be more consistent with inhibition of the habituated response driven by the novelty of the dishabituators (Thompson 2009, Kavšek 2013, Steiner and Barry 2014, Trisal, Aranha et al. 2022). Our results reveal evidence supporting the second scenario, of dishabituation requiring coordinated activities of multiple dishabituator-specific neuronal circuits to recruit the MBs and ostensibly specific afferent MBONs to drive reinstatement of OCT avoidance as detailed below.

Distinct sensory neurons are engaged by the habituating and dishabituating stimuli.

The 45V footshocks are effective habituators (Acevedo, Froudarakis et al. 2007, Roussou, Papanikolopoulou et al. 2019, Foka, Georganta et al. 2022) and dishabituators ((Semelidou, Acevedo et al. 2018) and herein). How footshocks activate multiple areas of the adult brain (Yu, Akalal et al. 2006) is not well-understood, but probably engage mechanosensory neurons (Acevedo, Froudarakis et al. 2007). Signals via these mechanosensory neurons do not overlap those from OSNs engaged by OCT and YO (Acevedo, Froudarakis et al. 2007, Benton 2022), as also demonstrated by the proper footshock habituation of the anosmic flies (Fig 1E). Therefore, the footshock stimulus represents a novel mechanosensory dishabituator, likely engaging distinct LH neurons (Dolan, Frechter et al. 2019, Bates, Schlegel et al. 2020) than those whose activity is attenuated by habituation to OCT. It follows then that neuronal activity relaying the footshock dishabituator to the LH is not convergent with

neurons in this area of the brain whose attenuated activity underlies habituation to OCT (Semelidou, Acevedo et al. 2018).

The YO olfactory dishabituator was also robustly avoided at 90 sec (Suppl Fig 7C, D), supporting the contention that failure to dishabituate with this stimulus cannot be due to impaired olfaction. As both YO and OCT are olfactory stimuli (Fig 1D-H), an initial concern was whether flies generalize the prolonged OCT stimulation (Thompson and Spencer 1966). However, as shown previously (Semelidou, Acevedo et al. 2018), flies habituated to OCT responded to subsequent stimulation with benzaldehyde and other odors as if naïve. This demonstrates that flies are not fatigued and do not generalize (Rankin, Abrams et al. 2009) odors after 4-min of OCT exposure. As a *bona fide* olfactory stimulus (Fig 1D, E), YO is comprised of a bouquet of odorants that may contain ethyl acetate, isoamyl acetate, β-myrcene, benzaldehyde and linalool (Scheidler, Liu et al. 2015). Although we do not know the precise constitution of YO volatiles of the preparation we use, it nevertheless is unlikely that any of these odorants engage the same olfactory receptors as OCT. This suggests that the habituator is segregated from the dishabituator at the sensory input level and most likely in their penultimate activation of distinct LH neurons based on their opposing valence (Das Chakraborty, Chang et al. 2022). Therefore, YO is a distinct odor, which alters the olfactory context, but it is unlikely that it sensitizes neurons whose activity is inhibited by OCT habituation at the sensory input level or the LH.

Engagement of mushroom body neurons in dishabituation.

Habituation to OCT does not require neurotransmission from the MBs (Semelidou, Acevedo et al. 2018), but the habituating odor must engage these neurons as they are integral parts of the fly olfactory system (Benton 2022). This is a significant difference with the requirement for afferent neurotransmission from the MBs (Fig 2) for homosensory and heterosensory dishabituation and underlies its role as a sensory node receiving both olfactory and mechanosensory inputs.

As stated above, OCT and YO most likely engage non-overlapping OSNs that relay their activation to the MBs and the LH (Benton 2022). Within the MBs, incoming olfactory stimuli are represented by distinct activation patterns of MBns (Honegger, Campbell et al. 2011), such that OCT and YO are expected to be differentiated therein by their unique sparse activation signature. Therefore, we propose that this odor-specific MBn activation, identifies YO as a stimulus whose activation pattern deviates from the established, expected OCT-specific pattern and this incongruence identifies the YO dishabituator as novel and is relayed to downstream circuits.

Importantly, the distinct neuronal subsets comprising the MBs contribute differentially to transmission of this information. Neurotransmission from α′β′MBns does not appear to contribute to

signaling dishabituation (Fig 3G). In contrast, afferent activity of αβ and γ MBns can drive dishabituation (Fig 3C, K) and does not affect OCT avoidance in naïve animals (Fig 3D, L). However, silencing these two MBn types individually does not block either homosensory or heterosensory dishabituation (Fig 3B, J). This is consistent with the view that αβ and γ MBns function redundantly or cooperatively to relay dishabituating signals. We argue therefore that neurotransmission from αβ neurons most probably via MBONs (Aso, Sitaraman et al. 2014), contributes to full activation of their γ counterparts. Neurotransmission from γ MBns to follower MBONs is known to modulate behavioral choices including avoidance and attraction (Aso, Hattori et al. 2014, Aso, Sitaraman et al. 2014, Owald, Felsenberg et al. 2015, Owald and Waddell 2015, Hancock, Rostami et al. 2022) and therefore these neurons are poised to relay downstream the discord between the expected OCT and novel YO, or footshock stimuli.

A number of GABAergic MBONs are downstream of γ-MBns and they appear to contribute to dishabituation, as photoactivation of a subset of γ-follower MBONs (MBON-γ3 and MBON-γ3β′1) partially reinstated naïve OCT avoidance in habituated animals (Fig 7I). Because activation of these neurons alone did not drive dishabituation to naïve avoidance levels, additional excitatory or inhibitory MBONs must be involved in the process. Interestingly, the also GABAergic MBONγped>αβ neurons which are most probably activated by the process feedback and could inhibit further activity of αβ neurons (Aso, Sitaraman et al. 2014) and are known to contribute to the valence and predictive value of odors (Aso, Sitaraman et al. 2014). The precise role of the different γ-afferent MBONs in dishabituation is the subject of future investigations, but collectively the extant data indicate that neurotransmission from γ MBns to follower MBONs is cardinal to homosensory and heterosensory dishabituation.

Segregation of dopaminergic inputs mediating homosensory and heterosensory dishabituators.

The interaction between particular MBns and MBONs modulated by dopamine (Fig 4 A,B,C) is known to mediate changes of their synaptic output based on prior experiences (Aso, Hattori et al. 2014, Owald and Waddell 2015, Aso and Rubin 2016). It is likely then that concurrent DAN activity with the presentation of the dishabituator recruits the MBns to the dishabituation circuitry. In support of this view, collective silencing of all DANs did not affect avoidance or habituation but abrogated dishabituation specifically (Fig 4D). Conversely, DAN activation restored OCT avoidance in habituated animals (Fig 4E) and did not alter avoidance in naïve flies. Dopaminergic neurotransmission has been reported to drive dishabituation in another paradigm in Drosophila, that of gustatory habituation, but whether the MBs are engaged and how in this paradigm is unclear (Trisal, VijayRaghavan et al. 2023).

How does the homosensory dishabituator YO activate the PAM cluster of DANs? Olfactory stimuli arriving at the MBs via antennal lobe projection neurons (Fig 1A and (Benton 2022)) are known to modulate bidirectionally PAM-DAN activity (Riemensperger, Völler et al. 2005, Yamagata, Ezaki et al. 2021). PAM-DANs are also activated differentially by rewarding stimuli (Yamagata, Ichinose et al. 2015), and are involved in odor tracking (Aso and Rubin 2016, Jovanoski, Duquenoy et al. 2023). Therefore, PAM neurons are well-poised to be activated by the appetitive YO (Fig 1F). The notably elevated activation threshold of PAM-DANs to drive dishabituation suggests a requirement for additional inputs to MBns and our data indicate that this in contributed by GABAergic inputs from APL interneurons (Fig 7E).

Silencing APLs abrogates specifically homosensory dishabituation (Fig 7B), and like PAM-DANs these neurons require strong photoactivation to drive the process (Fig 7C). Although APL neurons innervate broadly the MBs, their inhibitory effect is spatially localized to particular compartments (Amin, Apostolopoulou et al. 2020), defined by the synaptic fields of efferent dopaminergic inputs (Aso, Hattori et al. 2014). APL neurons can respond to and coordinate activities with PAM-DANs as they express the excitatory DopEcR and inhibitory Dop2R dopamine receptors (Zhou, Chen et al. 2019). APL activity is thought to sparsen odor responses in the MBs (Prisco, Deimel et al. 2021), potentially by differential compartment-specific inhibition. Spatially restricted inhibitory inputs along with excitatory from PAM-DANs may be necessary to hone and enhance the differences of the specific activation patterns (Honegger, Campbell et al. 2011, Benton 2022) of the habituator and dishabituator. In support of this notion, GABAergic inhibition has been reported to modulate the output of PAM neurons resulting in refinement of responses to reward signals (Yamagata, Ezaki et al. 2021).

Interestingly, APLs respond to footshocks as well (Liu and Davis 2009, Zhou, Chen et al. 2019), but silencing them does not appear to affect heterosensory dishabituation. This supports the view that inhibitory activity from APLs reinforces differentiation of the MB activation patterns of habituator and dishabituator odors as suggested above. Furthermore, it appears that the requirement for APL activity may be specific to PAM-activating attractive dishabituating odors. This is suggested by dishabituation of YO habituated flies with a puff of the aversive OCT. In this case the dishabituator was partially substituted by photoactivation of PPL1, rather than PAM DANs (Suppl Fig 5D).

The aversive heterosensory dishabituator is as expected relayed by the PPL1 cluster of DANs (Fig 4J), known to be activated by footshocks and to engage the MBs (Claridge-Chang, Roorda et al. 2009, Aso, Hattori et al. 2014, Aso and Rubin 2016). Footshock-activated PPL1s enhance avoidance of the punished odor in negatively reinforced associative olfactory learning (Aso and Rubin 2016, Boto, Stahl et al. 2019). However, heterosensory dishabituation is not the result of footshock-driven

associative enhancement of OCT avoidance. Footshock-reinforced associative learning requires multiple footshocks (Tully and Quinn 1985) and not a single mild stimulus as is used for dishabituation. Moreover, a single footshock is delivered after OCT presentation has ceased, conditions that make delay and trace conditioning (Dylla, Galili et al. 2013) improbable. Finally, photoactivation of PPL1-DANs in habituated flies resulted in recovery of OCT avoidance at the lower, but not the higher activation intensity (Fig 4K). This is the inverse of what would be expected of an associative process, as the more intense PPL1 activation would be expected to facilitate avoidance of the punished odor. Therefore, PPL1 activation relays a novel aversive stimulus which changes the sensory context underlying OCT habituation and may reflect an adaptive measure to a novel potentially threatening context.

The functional diversity of PPL1-DANs (Sareen, McCurdy et al. 2021) was reflected in their differential engagement in dishabituation. Importantly, only activation of γ-projecting PPL1-DANs reinstated OCT avoidance to habituated flies, albeit not to naïve avoidance levels (Fig 5B, E, H, K). This suggests that additional γ-projecting PPL1 neurons of the cluster contribute to efficient heterosensory dishabituation. Notably, the dishabituating effect of PPL1 activation and signaling to γ MBns is experience-dependent as their robust activation actually decreased OCT avoidance in naïve animals (Fig 5C, F). Therefore, PPL1 neurotransmission upon footshock presentation must modulate γ MBn activity and/or that of their afferent MBONs (Aso and Rubin 2016), such as the GABAergic γ3 and γ3β′1 (Fig 7I), in support of their proposed cardinal role in relieving inhibition of OCT avoidance at the LH (Semelidou, Acevedo et al. 2018).

Dishabituation requires coordinated activities of different neuronal subsets with distinct roles.

Habituation to prolonged OCT exposure entails inhibition of excitatory LH neurons driving avoidance of this odor in a time-dependent manner (Semelidou, Acevedo et al. 2018). This is mediated by the activity of inhibitory projection neurons and is independent of MB activity (Semelidou, Acevedo et al. 2018). Nevertheless, exposure to the habituator odorant results in the sparse activation of MB neurons (Honegger, Campbell et al. 2011). This activation is necessary for latency to habituate, but not habituation itself (Semelidou, Acevedo et al. 2018). Therefore, we propose that although the MBs do not play an active role in habituation, they can in principle store, at least temporarily, the expected dominant stimulus in the context the flies find themselves in.

The sudden presentation of a novel odor is relayed to the MBs and generates its unique representation signature therein (Honegger, Campbell et al. 2011). We propose that differentiating the activity pattern of the novel briefly presented dihabituator from the established one of the habituator odor requires GABAergic inputs from APL neurons (Fig 7E). The incongruence of the

established OCT activation pattern with that of the unexpected novel olfactory stimulus reinforced by dopaminergic inputs from PAM neurons if attractive (Fig 4G), or PPL1 neurons if aversive (Suppl 5D), results in neurotransmission from γ MBns minimally to GABAergic MBONs (Fig 7G-I), but possibly also to excitatory MBONs projecting to the LH. Similarly, the footshock signal reaches the MBs and results in a distinct activation pattern from that established by OCT exposure (Yu, Akalal et al. 2006). This pattern is reinforced by PPL1 dopaminergic inputs and results in afferent neurotransmission from γ MBns and through activation of GABAergic and other MBONs transmitted to the LH.

In the proposed model (Fig 8), the MBs are the locus of comparison between the expected olfactory stimulus habituated to and any unexpected dishabituator. Persistent activity of MBns post odor exposure has been reported under different contexts (Yu, Ponomarev et al. 2004, Davis 2011). Therefore, the OCT pattern of MBn activation persists even after odor exposure has ceased. This period is likely reflected in the 4-6 minutes required for spontaneous recovery (Rankin, Abrams et al. 2009) of OCT habituation (Semelidou, Acevedo et al. 2018). Therefore, the MB activation patterns of the habituator and either type of dishabituator stimuli must coexist.

We propose that the dopaminergic inputs facilitate the differentiation of the dishabituator from the habituator MB activation patterns and result in neurotransmission from γ-MBns (Zhao, Lenek et al. 2018). The proposed concurrent activation of DAN/γ2α′1/cognate MBON neurons has been proposed to result in diverse functional consequences (Berry, Phan et al. 2018), and we propose that it underlies the emergence and relaying of dishabituating signals. This proposed tripartite interaction is ostensibly reflected in the similar effects on habituated flies of artificially emulating this by photoactivation of γ-MBns (Fig 3K), PPL1-γ2α′1 (Fig 5B) and γ3 and γ3β′1 GABAergic MBONs (Fig 7I). Therefore, dopaminergic inputs recruit the MBs in the dishabituating circuit, elicit requisite afferent neurotransmission, but dishabituation does not occur therein.

We further propose that dishabituation actually occurs at the LH and is consequent of activation therein of distinct neurons than those whose activity is attenuated by iPN inhibitory inputs (Semelidou, Acevedo et al. 2018) driving habituation. In the proposed model, convergent excitatory input to the LH due to the novel dishabituating stimuli, along with excitatory and/or inhibitory signals from the MBs reinstate OCT avoidance. This model is consistent with the previously published notion that dishabituation overrides, rather than eliminates habituation (Trisal, Aranha et al. 2022). This notion is also consistent with the characteristic that habituation occurs more rapidly in animals already habituated to the same stimulus after spontaneous recovery (Rankin, Abrams et al. 2009), or we posit even after dishabituation. The latter prediction is currently under investigation. The proposed multipartite model is not inconsistent with work in vertebrates suggesting distinct circuitries driving habituation and dishabituation and the role of the hippocampus in processing and mediating

responses to novel stimuli, differentiating habituators from dishabituation stimuli and driving dishabituation (Thinus-Blanc, Save et al. 1991, Wang and Arbib 1992)

Because distinct neurons and circuits are engaged in mediating habituation and dishabituation, we suggest that our results do not support sensitization as the driver for dishabituation. Rather our results support the notion that dishabituation occurs by inhibition of the attenuated response to OCT. However, whether the dishabituators provide a measure of sensitization at the LH, which along with inhibitory inputs relayed from the MBs establish dishabituation cannot be eliminated as a possibility at the moment. Future experiments utilizing imaging techniques and optogenetics will aim at differentiating these possibilities, based on the circuitries and behavioral outputs established here. Finally, we posit that understanding dishabituation and its underlying mechanisms in model systems such as Drosophila is likely to have significant implications in studies of attention and cognitive processing in humans (Kavsek and Bornstein 2010) and other species.

MATERIALS AND METHODS

Drosophila strains

Drosophila melanogaster strains were cultured in standard wheat-flour-sugar food supplemented with soy flour and $CaCl_2$ at 25°C, unless specified otherwise. For efficient RNA interference (RNAi)-mediated abrogation with the temperature-sensitive TARGET system, flies were raised at 18°C until hatching, to keep the transgenes silent and then placed at 30°C for 2 days prior to testing to induce the transgenes. Control w^{1118} flies had been backcrossed to the Canton-S wild type strain for at least 10 generations (w^{1118} strain). All other strains had been backcrossed to the Cantonised-w^{1118} for four to six generations prior to use in behavioral experiments.

The UAS-Shibire^{ts1} transgene (BDRC #44222) bearing a temperature-sensitive mutation in Dynamin attenuating re-uptake of synaptic vesicles (Kitamoto 2001) was kindly provided by RL Davis. For the optogenetic activation experiments the robustly expressed UAS-ChR2-XXL transgene encoding for the D156C mutant of Channelrhodopsin-2 (BDRC #55135) was used, courtesy of André Fiala. ChR2-XXL presents an extended open state of the channel and can be efficiently photoactivated with without requiring retinal supplementation (Dawydow, Gueta et al. 2014).

The Dopaminergic system was targeted with the pleGal4 driver (Aso, Hattori et al. 2014) (BDRC #68302). The PAM subset of dopaminergic neurons was targeted with the 0273Gal4 driver (Burke, Huetteroth et al. 2012), a kind gift of S. Waddell (Oxford University, Oxford, UK). Conversely, the PPL1 subset of DANs was targeted with MB504BGal4 (Vogt, Schnaitmann et al. 2014) (BDRC #68329), obtained from R. Tanimoto (Tohoku University, Sendai, Japan). Drivers for subsets of the PPL1-DANS, PPL1-γ1pedc, PPL1-γ2α′1, PPL1-α2α′2, PPL1-α3 (Aso, Hattori et al. 2014, Aso and Rubin 2016), were obtained from BDRC (#68253, #68308, #68278, #68334 respectively), as was the MB110C driver (#68262), targeting the MBONs 8,9 afferent from γ3 and γ3β′1 compartments (Aso, Hattori et al. 2014).

The dncGal4 driver (BDRC #48571) was used to target all MB neurons-MBns (Foka, Georganta et al. 2022). The αβ MBns were targeted with two drivers: c739Gal4 (Pavlopoulos, Anezaki et al. 2008, Georganta, Moressis et al. 2021) (BDRC #7362) and 17dGal4 (Akalal, Wilson et al. 2006) provided by RL Davis (Scripps Institute, University of Florida, USA). Drivers targeting the α′β′ MBns, were the c305aGal4 (Krashes, Keene et al. 2007) and VT030604Gal4 (Roussou, Papanikolopoulou et al. 2019) (VDRC #200228), kind gifts from S. Waddell (Oxford University, Oxford, UK). To mark the γ MBns, two drivers were used: MB131BGal4 (Aso, Hattori et al. 2014) (BDRC #68265), kindly provided by Y. Aso (Janelia Research Campus, Howard Hughes Medical Institute, Ashburn, VA) and VT044966Gal4 (VDRC #203571), a gift of K. Keleman (Howard Hughes Medical Institute).

The APLGal4 driver was described previously (Wu, Shih et al. 2013) and the transgenic lines encoding interfering RNA (RNAi lines) were obtained from VDRC: UASGad RNAi (#32344), UASTbh RNAi B (#51667) and BDRC: UASTbh RNAi A (#27667) respectively. The previously described GadGal4 (BDRC #51630) (Buchner 1991, Georganta, Moressis et al. 2021) and RdlGal4 (Jenett, Rubin et al. 2012) (#49620) were obtained from BDRC. The Olfactory Receptor Co-receptor (Orco) mutants were sourced from BDRC ($Or83b^1$ #23129, $Or83b^2$ #23130).

Finally, $TubGal80^{ts}$ transgenes were obtained from RL Davis (Scripps Institute, University of Florida, USA) and were introduced to Gal4 driver strains by standard genetic crosses or recombination as indicated.

Behavioral experiments

To obtain animals for behavioral experiments, Gal4 driver homozygotes were crossed to UAS-$Shibire^{ts}$ and UASChR2-XXL *en-masse* to produce the experimental groups. Similarly, Gal4 driver homozygotes, UAS-$Shibire^{ts}$ and UAS-ChR2-XXL were mass-crossed to w^{1118} flies, to obtain isogenic heterozygous controls. For the RNAi experiments APLGal4;$Gal80^{ts}$ homozygotes were crossed to the RNAi transgene-bearing lines and to w^{1118} or $y^1;v$ accordingly to produce matching genetic backgound isogenic heterozygous controls. All flies used in behavioral experiments were tested 3–5 days after emergence. The flies were transferred to clean vials with fresh food one hour before conducting behavioral experiments. All experiments were performed under dim red light at 25°C with humidity maintained between 60% and 70%.

The responses to 3-Octanol (habituator) and the Shock and Yeast Odor dishabituators were set up as described before (Semelidou, Acevedo et al. 2019), and were re-optimized with Canton-S and w^{1118} animals. Strains expressing $Shibire^{ts}$ were systematically assessed for OCT avoidance under permissive and non-permissive conditions. Although variable among genotypes, OCT avoidance was not significantly different between permissive and non-permissive conditions for all strains tested (Suppl. Fig 7). Naïve Canton-S and w^{1118} flies were subjected to optogenetic activation to ascertain that the treatment does not affect OCT avoidance *per se* (Suppl Fig 2B, D).

<u>Olfactory habituation and dishabituation</u>

Olfactory habituation experiments were performed as described previously (Semelidou, Acevedo et al. 2018). For “habituation training”, approximately 60-65 flies were exposed in the upper arm of a standard T-maze to an airstream (500 ml/min) drawn over a 5.7cm^2 meniscus of the aversive odor DL-3-Octanol (Thermo Scientific) for 4 minutes. Immediately after odor exposure the flies were treated with one of the dishabituators, a single 1.25 sec 45V DC electric shock, or 3 sec of air drawn over a meniscus of 1.8 cm^2 of brewer’s yeast solution (0.3 gr brewer’s yeast / 1ml dH_2O) we name

“yeast odor”, YO. Electric shock is an aversive mechanosensory stimulus and as previously described, the number of shocks does not have a significant effect on dishabituation (Semelidou, Acevedo et al. 2018). The 45V footshock used as a dishabituator (Fig 1B, C) is weaker than that used for associative conditioning (Georganta, Moressis et al. 2021), but was avoided robustly despite the variability among genetic backgrounds (Suppl Fig 7A, B) and weak stimuli can be at least as effective dishabituatos as stronger ones (Marcus, Nolen et al. 1988).,. Hence, the footshock dishabituator (Fig 1B, C) represents a behaviorally salient novel stimulus and failure to drive dishabituation is not due to limited ability to sense and respond to it.

In contrast, extending the exposure to YO, shifts the response of control flies from initial attraction to an aversive response. This observation prompted implementation of the appetitive 3-second yeast puff as a dishabituator.

After training and a 30-second rest, the animals were positioned in the choice point of the maze to assess their osmotactic response. They were presented with a choice between air and OCT for 90 seconds. Subsequently, the flies were confined to the arm they selected and tallied. The Performance Index (PI) was derived by subtracting the percentage of flies favoring the scented arm (OCT) from the percentage congregating in the unscented arm (air). Habituation to OCT is manifested as post-exposure reduced avoidance compared to that of naïve animals.

For neuronal silencing experiments, UAS-Shibire^{ts} -expressing strains were placed in a 32°C incubator for 30 min prior to the start of the “training phase” to inactivate the transgenic temperature-sensitive Shibire protein, which recovers its full activity within 15 min after removal from the restrictive temperature (Kitamoto 2001, McGuire, Le et al. 2001). The isogenic heterozygous controls were subjected to the same treatment, while the uninduced control group remained at the original experimental temperature of 25°C.

Flies expressing RNAi-mediating transgenes were transferred to vials with fresh food one hour prior the experiment and placed again at 30°C to sustain the silencing effect. The isogenic heterozygous controls were subjected to the same treatments as the experimental group, while the uninduced control group remained at 18°C after hatching for two days to avoid transgene expression, transferred to fresh food one hour before the experiment and remained at the experimental temperature of 25°C.

For optical modulation of neuronal activity, the flies were stimulated with a continuous 3-sec light pulse at 460nm**,** of three different light intensities generated by modulating the electric potential of the diode to 4.5V, 5V, and 6V. To emulate a dishabituator, flies expressing the UAS-ChR2-XXL transgene were photoactivated after the 4-minute OCT exposure inside the training arm. After a 30-second rest phase, they were then given the choice between air and OCT for 90 seconds. The different

photoactivation intensities were meant to ascertain that neurons would not be unresponsive because of subthreshold stimulation. To test the role of the photoactivated neurons in mediating avoidance *per se,* naïve flies expressing the UAS-ChR2-XXL transgene were exposed to light without prior exposure to OCT and then tested for avoidance of the odor.

Shock habituation and dishabituation

Habituation to footshocks was performed as described previously (Foka, Georganta et al. 2022). For exposure to the habituator, approximately 60 flies were exposed in the upper arm of a standard T-maze to 15 recurrent 45 V DC footshocks via an electrified copper grid for 90 seconds. Immediately after shock treatment, the flies were presented with the YO dishabituator described above, followed by positioning them on the center of the maze to assess their subsequent avoidance of an electrified maze arm, *versus* an arm carrying an inert grid. Following a 90 second choice period, the flies were trapped and tallied. The Performance Index (PI) was calculated by subtracting the percentage of flies favoring the inert grid from those congregating in the arm with the electrified grid.

Statistical analyses

For all experiments, both control and genetically matched experimental groups were tested together within the same session, employing a balanced experimental design. The sequence of training and testing between the different groups was randomized to eliminate temporal bias. In cases where two or three genetic controls were utilized, significant differences from all the controls were required for results from experimental animals to be considered significantly different. For all experiments employing expression of Shi^{ts} only the experimental genotypes (UN *versus* IN) are shown in the relevant figures for simplicity. However, all control genotypes were run in parallel as indicated in the cumulative Statistics Table (Suppl Table 1) and were included in the statistical analysis of the experiment, estimating ANOVAs and p values.

The raw data were analyzed using parametric methods with the JMP statistical software package from SAS Institute. ANOVA tests were conducted, followed by planned comparisons (least square mean contrast analyses) to assess significant differences among genotypes. The significance level was adjusted for experiment-wise error rates, following the approach suggested by Sokal and Rohlf (Sokal and Rohlf 1981). Detailed statistical comparisons are provided in the text and summarized in the collective statistics table (Suppl Table 1).

Artwork

All models and art work were created with Biorender.com.

Acknowledgements

The authors would like to thank Y. Aso, R. Davis, A. Fiala, R. Tanimoto, S. Waddell and the Bloomington Drosophila Stock Center for fly strains. M. Loizou for the endless supply of fly food and fly husbandry and all members of the lab for fruitful debates and discussions. This work was supported by a grant from the Hellenic Foundation for Research and Innovation (HFRI FM17-TΔE2961) to EMCS.

Conflict of Interest.

The authors declare no conflict of interest.

REFERENCES

Acevedo, S. F., E. I. Froudarakis, A. Kanellopoulos and E. M. Skoulakis (2007). "Protection from premature habituation requires functional mushroom bodies in Drosophila." Learn Mem **14**(5): 376-384.

Acevedo, S. F., E. I. Froudarakis, A. A. Tsiorva and E. M. Skoulakis (2007). "Distinct neuronal circuits mediate experience-dependent, non-associative osmotactic responses in Drosophila." Mol Cell Neurosci **34**(3): 378-389.

Akalal, D. B., C. F. Wilson, L. Zong, N. K. Tanaka, K. Ito and R. L. Davis (2006). "Roles for Drosophila mushroom body neurons in olfactory learning and memory." Learning & Memory (Cold Spring Harbor, N.Y.) **13**: 659–668.

Amin, H., A. A. Apostolopoulou, R. Suarez-Grimalt, E. Vrontou and A. C. Lin (2020). "Localized inhibition in the Drosophila mushroom body." Elife **9**.

Antonov, I., E. R. Kandel and R. D. Hawkins (1999). "The contribution of facilitation of monosynaptic PSPs to dishabituation and sensitization of the Aplysia siphon withdrawal reflex." J Neurosci **19**(23): 10438-10450.

Aso, Y., D. Hattori, Y. Yu, R. M. Johnston, N. A. Iyer, T. T. Ngo, H. Dionne, L. F. Abbott, R. Axel, H. Tanimoto and G. M. Rubin (2014). "The neuronal architecture of the mushroom body provides a logic for associative learning." Elife **3**: e04577.

Aso, Y. and G. M. Rubin (2016). "Dopaminergic neurons write and update memories with cell-type-specific rules." Elife **5**.

Aso, Y., D. Sitaraman, T. Ichinose, K. R. Kaun, K. Vogt, G. Belliart-Guérin, P. Y. Plaçais, A. A. Robie, N. Yamagata, C. Schnaitmann, W. J. Rowell, R. M. Johnston, T. T. Ngo, N. Chen, W. Korff, M. N. Nitabach, U. Heberlein, T. Preat, K. M. Branson, H. Tanimoto and G. M. Rubin (2014). "Mushroom body output neurons encode valence and guide memory-based action selection in Drosophila." Elife **3**: e04580.

Aso, Y., I. Siwanowicz, L. Bracker, K. Ito, T. Kitamoto and H. Tanimoto (2010). "Specific dopaminergic neurons for the formation of labile aversive memory." Curr Biol **20**(16): 1445-1451.

Bates, A. S., P. Schlegel, R. J. V. Roberts, N. Drummond, I. F. M. Tamimi, R. Turnbull, X. Zhao, E. C. Marin, P. D. Popovici, S. Dhawan, A. Jamasb, A. Javier, L. Serratosa Capdevila, F. Li, G. M. Rubin, S. Waddell, D. D. Bock, M. Costa and G. S. X. E. Jefferis (2020). "Complete Connectomic Reconstruction of Olfactory Projection Neurons in the Fly Brain." Current Biology **30**(16): 3183-3199.e3186.

Benton, R. (2022). "Drosophila olfaction: past, present and future." Proc Biol Sci **289**(1989): 20222054.

Berry, J. A., A. Phan and R. L. Davis (2018). "Dopamine Neurons Mediate Learning and Forgetting through Bidirectional Modulation of a Memory Trace." Cell Rep **25**(3): 651-662.e655.

Blum, A. L., W. Li, M. Cressy and J. Dubnau (2009). "Short- and long-term memory in Drosophila require cAMP signaling in distinct neuron types." Curr Biol **19**(16): 1341-1350.

Boto, T., A. Stahl, X. Zhang, T. Louis and S. M. Tomchik (2019). "Independent Contributions of Discrete Dopaminergic Circuits to Cellular Plasticity, Memory Strength, and Valence in Drosophila." Cell Rep **27**(7): 2014-2021.e2012.

Buchner, E. (1991). "Genes expressed in the adult brain of Drosophila and effects of their mutations on behavior: a survey of transmitter- and second messenger-related genes." J Neurogenet **7**(4): 153-192.

Burke, C. J., W. Huetteroth, D. Owald, E. Perisse, M. J. Krashes, G. Das, D. Gohl, M. Silies, S. Certel and S. Waddell (2012). "Layered reward signalling through octopamine and dopamine in Drosophila." Nature **492**(7429): 433–437.

Carew, T. J., V. F. Castellucci and E. R. Kandel (1971). "An analysis of dishabituation and sensitization of the gill-withdrawal reflex in Aplysia." Int J Neurosci **2**(2): 79-98.

Chen, C. C., J. K. Wu, H. W. Lin, T. P. Pai, T. F. Fu, C. L. Wu, T. Tully and A. S. Chiang (2012). "Visualizing long-term memory formation in two neurons of the Drosophila brain." Science **335**(6069): 678-685.

Claridge-Chang, A., R. D. Roorda, E. Vrontou, L. Sjulson, H. Li, J. Hirsh and G. Miesenbock (2009). "Writing memories with light-addressable reinforcement circuitry." Cell **139**(2): 405-415.

Cohen, T. E., S. W. Kaplan, E. R. Kandel and R. D. Hawkins (1997). "A simplified preparation for relating cellular events to behavior: mechanisms contributing to habituation, dishabituation, and sensitization of the Aplysia gill-withdrawal reflex." J Neurosci **17**(8): 2886-2899.

Coll-Tane, M., A. Krebbers, A. Castells-Nobau, C. Zweier and A. Schenck (2019). "Intellectual disability and autism spectrum disorders 'on the fly': insights from Drosophila." Dis Model Mech **12**(5).

Crittenden, J. R., E. M. Skoulakis, K. A. Han, D. Kalderon and R. L. Davis (1998). "Tripartite mushroom body architecture revealed by antigenic markers." Learn Mem **5**(1-2): 38-51.

Das Chakraborty, S., H. Chang, B. S. Hansson and S. Sachse (2022). "Higher-order olfactory neurons in the lateral horn support odor valence and odor identity coding in Drosophila." Elife **11**.

Das, S., M. K. Sadanandappa, A. Dervan, A. Larkin, J. A. Lee, I. P. Sudhakaran, R. Priya, R. Heidari, E. E. Holohan, A. Pimentel, A. Gandhi, K. Ito, S. Sanyal, J. W. Wang, V. Rodrigues and M. Ramaswami (2011). "Plasticity of local GABAergic interneurons drives olfactory habituation." Proc Natl Acad Sci U S A **108**(36): E646-654.

Davis, R. L. (2011). "Traces of Drosophila memory." Neuron **70**(1): 8-19.

Davis, R. L. (2023). "Learning and memory using Drosophila melanogaster: a focus on advances made in the fifth decade of research." Genetics **224**(4).

Dawydow, A., R. Gueta, D. Ljaschenko, S. Ullrich, M. Hermann, N. Ehmann, S. Gao, A. Fiala, T. Langenhan, G. Nagel and R. J. Kittel (2014). "Channelrhodopsin-2-XXL, a powerful optogenetic tool for low-light applications." Proc Natl Acad Sci U S A **111**(38): 13972-13977.

Dolan, M.-J., S. Frechter, A. S. Bates, C. Dan, P. Huoviala, R. J. V. Roberts, P. Schlegel, S. Dhawan, R. Tabano, H. Dionne, C. Christoforou, K. Close, B. Sutcliffe, B. Giuliani, F. Li, M. Costa, G. Ihrke, G. W. Meissner, D. D. Bock, Y. Aso, G. M. Rubin and G. S. X. E. Jefferis (2019). "Neurogenetic dissection of the Drosophila lateral horn reveals major outputs, diverse behavioural functions, and interactions with the mushroom body." eLife **8**: e43079.

Driscoll, M., S. N. Buchert, V. Coleman, M. McLaughlin, A. Nguyen and D. Sitaraman (2021). "Compartment specific regulation of sleep by mushroom body requires GABA and dopaminergic signaling." Scientific Reports **11**(1): 20067.

Dylla, K. V., D. S. Galili, P. Szyszka and A. Lüdke (2013). "Trace conditioning in insects—keep the trace!" Frontiers in Physiology **4**.

Ehrlich, J. S., N. M. Boulis, T. Karrer and C. L. Sahley (1992). "Differential effects of serotonin depletion on sensitization and dishabituation in the leech, Hirudo medicinalis." J Neurobiol **23**(3): 270-279.

Fenckova, M., L. E. R. Blok, L. Asztalos, D. P. Goodman, P. Cizek, E. L. Singgih, J. C. Glennon, J. IntHout, C. Zweier, E. E. Eichler, C. R. von Reyn, R. A. Bernier, Z. Asztalos and A. Schenck (2019). "Habituation Learning Is a Widely Affected Mechanism in Drosophila Models of Intellectual Disability and Autism Spectrum Disorders." Biol Psychiatry **86**(4): 294-305.

Feng, K. L., J. Y. Weng, C. C. Chen, M. B. Abubaker, H. W. Lin, C. C. Charng, C. C. Lo, J. S. de Belle, T. Tully, C. C. Lien and A. S. Chiang (2021). "Neuropeptide F inhibits dopamine neuron interference of long-term memory consolidation in Drosophila." iScience **24**(12): 103506.

Foka, K., E. Georganta, O. Semelidou and E. Skoulakis (2022). "Loss of the Schizophrenia-linked Furin protein from Drosophila mushroom body neurons results in antipsychotic-reversible habituation deficits." J Neurosci. **42**(39): 7496-7511.

Georganta, E. M., A. Moressis and E. M. C. Skoulakis (2021). "Associative Learning Requires Neurofibromin to Modulate GABAergic Inputs to Drosophila Mushroom Bodies." J Neurosci **41**(24): 5274-5286.

Ghirardi, M., O. Braha, B. Hochner, P. G. Montarolo, E. R. Kandel and N. Dale (1992). "Roles of PKA and PKC in facilitation of evoked and spontaneous transmitter release at depressed and nondepressed synapses in Aplysia sensory neurons." Neuron **9**(3): 479-489.

Groves, P. and R. Thompson (1979). "Habituation: A dual-process theory. ." Psychological Review **77**: 419-450.

Hancock, C. E., V. Rostami, E. Y. Rachad, S. H. Deimel, M. P. Nawrot and A. Fiala (2022). "Visualization of learning-induced synaptic plasticity in output neurons of the Drosophila mushroom body γ-lobe." Scientific Reports **12**(1): 10421.

Hawkins, R. D., T. E. Cohen and E. R. Kandel (2006). "Dishabituation in Aplysia can involve either reversal of habituation or superimposed sensitization." Learn Mem **13**(3): 397-403.

Hige, T., Y. Aso, M. N. Modi, G. M. Rubin and G. C. Turner (2015). "Heterosynaptic Plasticity Underlies Aversive Olfactory Learning in Drosophila." Neuron **88**(5): 985-998.

Hochner, B., M. Klein, S. Schacher and E. R. Kandel (1986). "Additional component in the cellular mechanism of presynaptic facilitation contributes to behavioral dishabituation in Aplysia." Proc Natl Acad Sci U S A **83**(22): 8794-8798.

Hofrichter, R., H. Siddiqui, M. Morrisey and M. Rutherford (2021). "Early Attention to Animacy: Change-Detection in 11-Month-Olds." Evol Psychol. **19**(2): 14747049211028220.

Honegger, K. S., R. A. A. Campbell and G. C. Turner (2011). "Cellular-Resolution Population Imaging Reveals Robust Sparse Coding in the Drosophila Mushroom Body." The Journal of Neuroscience **31**(33): 11772-11785.

Jenett, A., Gerald M. Rubin, T.-T. B. Ngo, D. Shepherd, C. Murphy, H. Dionne, Barret D. Pfeiffer, A. Cavallaro, D. Hall, J. Jeter, N. Iyer, D. Fetter, Joanna H. Hausenfluck, H. Peng, Eric T. Trautman, Robert R. Svirskas, Eugene W. Myers, Zbigniew R. Iwinski, Y. Aso, Gina M. DePasquale, A. Enos, P. Hulamm, Shing Chun B. Lam, H.-H. Li, Todd R. Laverty, F. Long, L. Qu, Sean D. Murphy, K. Rokicki, T. Safford, K. Shaw, Julie H. Simpson, A. Sowell, S. Tae, Y. Yu and Christopher T. Zugates (2012). "A GAL4-Driver Line Resource for Drosophila Neurobiology." Cell Reports **2**(4): 991-1001.

Jovanoski, K. D., L. Duquenoy, J. Mitchell, I. Kapoor, C. D. Treiber, V. Croset, G. Dempsey, S. Parepalli, P. Cognigni, N. Otto, J. Felsenberg and S. Waddell (2023). "Dopaminergic systems create reward seeking despite adverse consequences." Nature **623**(7986): 356-365.

Kavšek, M. (2013). "The comparator model of infant visual habituation and dishabituation: recent insights." Dev Psychobiol. **55**(8): 793-808.

Kavsek, M. and M. H. Bornstein (2010). "Visual habituation and dishabituation in preterm infants: a review and meta-analysis." Res Dev Disabil **31**(5): 951-975.

Keene, A. C., M. J. Krashes, B. Leung, J. A. Bernard and S. Waddell (2006). "Drosophila dorsal paired medial neurons provide a general mechanism for memory consolidation." Curr Biol **16**(15): 1524-1530.

Kitamoto, T. (2001). "Conditional modification of behavior in Drosophila by targeted expression of a temperature-sensitive shibire allele in defined neurons." J Neurobiol **47**(2): 81-92.

Krashes, M. J., A. C. Keene, B. Leung, J. D. Armstrong and S. Waddell (2007). "Sequential use of mushroom body neuron subsets during drosophila odor memory processing." Neuron **53**(1): 103-115.

Larsson, M. C., A. I. Domingos, W. D. Jones, M. E. Chiappe, H. Amrein and L. B. Vosshall (2004). "Or83b Encodes a Broadly Expressed Odorant Receptor Essential for Drosophila Olfaction." Neuron **43**(5): 703-714.

Liu, X. and R. L. Davis (2009). "The GABAergic anterior paired lateral neuron suppresses and is suppressed by olfactory learning." Nat Neurosci **12**(1): 53-59.

Mao, Z. and R. L. Davis (2009). "Eight different types of dopaminergic neurons innervate the Drosophila mushroom body neuropil: anatomical and physiological heterogeneity." Front Neural Circuits **3**: 5.

Marcus, E. A., T. G. Nolen, C. H. Rankin and T. J. Carew (1988). "Behavioral dissociation of dishabituation, sensitization, and inhibition in Aplysia." Science **241**(4862): 210-213.

Masuda-Nakagawa, L. M., K. Ito, T. Awasaki and C. J. O'Kane (2014). "A single GABAergic neuron mediates feedback of odor-evoked signals in the mushroom body of larval Drosophila." Front Neural Circuits **8**: 35.

McDiarmid, T. A., A. J. Yu and C. H. Rankin (2019). "Habituation Is More Than Learning to Ignore: Multiple Mechanisms Serve to Facilitate Shifts in Behavioral Strategy." Bioessays **41**(9): e1900077.

McGuire, S. E., P. T. Le and R. L. Davis (2001). "The role of Drosophila mushroom body signaling in olfactory memory." Science **293**(5533): 1330-1333.

Modi, M., Y. Shuai and G. Turner (2020). "The Drosophila Mushroom Body: From Architecture to Algorithm in a Learning Circuit." Annu Rev Neurosci. **43**: 465-484.

Otto, N., M. W. Pleijzier, I. C. Morgan, A. J. Edmondson-Stait, K. J. Heinz, I. Stark, G. Dempsey, M. Ito, I. Kapoor, J. Hsu, P. M. Schlegel, A. S. Bates, L. Feng, M. Costa, K. Ito, D. D. Bock, G. M. Rubin, G. Jefferis and S. Waddell (2020). "Input Connectivity Reveals Additional Heterogeneity of Dopaminergic Reinforcement in Drosophila." Curr Biol **30**(16): 3200-3211.e3208.

Owald, D., J. Felsenberg, C B. Talbot, G. Das, E. Perisse, W. Huetteroth and S. Waddell (2015). "Activity of Defined Mushroom Body Output Neurons Underlies Learned Olfactory Behavior in Drosophila." Neuron **86**(2): 417-427.

Owald, D. and S. Waddell (2015). "Olfactory learning skews mushroom body output pathways to steer behavioral choice in Drosophila." Curr Opin Neurobiol **35**: 178-184.

Pavlopoulos, E., M. Anezaki and E. M. Skoulakis (2008). "Neuralized is expressed in the alpha/beta lobes of adult Drosophila mushroom bodies and facilitates olfactory long-term memory formation." Proc Natl Acad Sci U S A **105**(38): 14674-14679.

Perisse, E., D. Owald, O. Barnstedt, C. B. Talbot, W. Huetteroth and S. Waddell (2016). "Aversive Learning and Appetitive Motivation Toggle Feed-Forward Inhibition in the Drosophila Mushroom Body." Neuron **90**(5): 1086-1099.

Plaçais, P. Y., S. Trannoy, G. Isabel, Y. Aso, I. Siwanowicz, G. Belliart-Guérin, P. Vernier, S. Birman, H. Tanimoto and T. Preat (2012). "Slow oscillations in two pairs of dopaminergic neurons gate long-term memory formation in Drosophila." Nat Neurosci **15**(4): 592-599.

Prisco, L., S. H. Deimel, H. Yeliseyeva, A. Fiala and G. Tavosanis (2021). "The anterior paired lateral neuron normalizes odour-evoked activity in the Drosophila mushroom body calyx." Elife **10**.

Ramaswami, M. (2014). "Network plasticity in adaptive filtering and behavioral habituation." Neuron **82**(6): 1216-1229.

Rankin, C. H., T. Abrams, R. J. Barry, S. Bhatnagar, D. F. Clayton, J. Colombo, G. Coppola, M. A. Geyer, D. L. Glanzman, S. Marsland, F. K. McSweeney, D. A. Wilson, C. F. Wu and R. F. Thompson (2009). "Habituation revisited: an updated and revised description of the behavioral characteristics of habituation." Neurobiol Learn Mem **92**(2): 135-138.

Rankin, C. H. and S. R. Wicks (2000). "Mutations of the caenorhabditis elegans brain-specific inorganic phosphate transporter eat-4 affect habituation of the tap-withdrawal response without affecting the response itself." J Neurosci **20**(11): 4337-4344.

Riemensperger, T., T. Völler, P. Stock, E. Buchner and A. Fiala (2005). "Punishment Prediction by Dopaminergic Neurons in Drosophila." Current Biology **15**(21): 1953-1960.

Roussou, I. G., K. Papanikolopoulou, C. Savakis and E. M. C. Skoulakis (2019). "Drosophila Bruton's Tyrosine Kinase Regulates Habituation Latency and Facilitation in Distinct Mushroom Body Neurons." J Neurosci **39**(44): 8730-8743.

Sareen, P. F., L. Y. McCurdy and M. N. Nitabach (2021). "A neuronal ensemble encoding adaptive choice during sensory conflict in Drosophila." Nature Communications **12**(1): 4131.

Scheidler, N. H., C. Liu, K. A. Hamby, F. G. Zalom and Z. Syed (2015). "Volatile codes: Correlation of olfactory signals and reception in Drosophila-yeast chemical communication." Scientific Reports **5**(1): 14059.

Schlegel, P., Y. Yin, A. S. Bates, S. Dorkenwald, K. Eichler, P. Brooks, D. S. Han, M. Gkantia, M. dos Santos, E. J. Munnelly, G. Badalamente, L. Serratosa Capdevila, V. A. Sane, A. M. C. Fragniere, L. Kiassat, M. W. Pleijzier, T. Stürner, I. F. M. Tamimi, C. R. Dunne, I. Salgarella, A. Javier, S. Fang, E. Perlman, T. Kazimiers, S. R. Jagannathan, A. Matsliah, A. R. Sterling, S.-c. Yu, C. E. McKellar, K. Kruk,

D. Bland, Z. Lenizo, A. T. Burke, K. P. Willie, A. S. Bates, N. Serafetinidis, N. Hadjerol, R. Willie, B. Silverman, J. A. Ocho, J. Bañez, R. A. Candilada, J. Gager, A. Kristiansen, N. Panes, A. Yadav, R. Tancontian, S. Serona, J. I. Dolorosa, K. J. Vinson, D. Garner, R. Salem, A. Dagohoy, J. Skelton, M. Lopez, T. Stocks, A. Pandey, D. J. Akiatan, J. Hebditch, C. David, D. Sapkal, S. M. Monungolh, V. Sane, M. L. Pielago, M. Albero, J. Laude, M. dos Santos, D. Deutsch, Z. Vohra, K. Wang, A. M. Gogo, E. Kind, A. J. Mandahay, C. Martinez, J. D. Asis, C. Nair, D. Patel, M. Manaytay, C. A. Lim, P. L. Ampo, M. D. Pantujan, D. Bautista, R. Rana, J. Seguido, B. Parmar, J. C. Saguimpa, M. Moore, M. W. Pleijzier, M. Larson, J. Hsu, I. Joshi, D. Kakadiya, A. Braun, C. Pilapil, K. Parmar, Q. Vanderbeck, C. Dunne, E. Munnelly, C. H. Kang, L. Lörsch, J. Lee, L. Kmecova, G. Sancer, C. Baker, J. Joroff, S. Calle, Y. Patel, O. Sato, J. Salocot, F. Salman, S. Molina-Obando, M. Bui, M. Lichtenberger, E. Tamboboy, K. Molloy, A. E. Santana-Cruz, A. Hernandez, S. Yu, M. Sorek, A. Diwan, M. Patel, T. R. Aiken, S. Morejohn, S. Koskela, T. Yang, D. Lehmann, J. Chojetzki, S. Sisodiya, S. Koolman, P. K. Shiu, S. Cho, A. Bast, B. Reicher, M. Blanquart, L. Houghton, H. Choi, M. Ioannidou, M. Collie, J. Eckhardt, B. Gorko, L. Guo, Z. Zheng, A. Poh, M. Lin, I. Taisz, W. Murfin, Á. S. Díez, N. Reinhard, P. Gibb, N. Patel, S. Kumar, M. Yun, M. Wang, D. Jones, L. Encarnacion-Rivera, A. Oswald, A. Jadia, M. Erginkaya, N. Drummond, L. Walter, I. Tastekin, X. Zhong, Y. Mabuchi, F. J. Figueroa Santiago, U. Verma, N. Byrne, E. Kunze, T. Crahan, R. Margossian, H. Kim, I. Georgiev, F. Szorenyi, A. Adachi, B. Bargeron, T. Stürner, D. Demarest, B. Gür, A. N. Becker, R. Turnbull, A. Morren, A. Sandoval, A. Moreno-Sanchez, D. A. Pacheco, E. Samara, H. Croke, A. Thomson, C. Laughland, S. B. Dutta, P. G. A. de Antón, B. Huang, P. Pujols, I. Haber, A. González-Segarra, A. Lin, D. T. Choe, V. Lukyanova, N. Mancini, Z. Liu, T. Okubo, M. A. Flynn, G. Vitelli, M. Laturney, F. Li, S. Cao, C. Manyari-Diaz, H. Yim, A. Duc Le, K. Maier, S. Yu, Y. Nam, D. Bąba, A. Abusaif, A. Francis, J. Gayk, S. S. Huntress, R. Barajas, M. Kim, X. Cui, A. R. Sterling, G. R. Sterne, A. Li, K. Park, G. Dempsey, A. Mathew, J. Kim, T. Kim, G.-t. Wu, S. Dhawan, M. Brotas, C.-h. Zhang, S. Bailey, A. Del Toro, K. Lee, T. Macrina, C. Schneider-Mizell, S. Popovych, O. Ogedengbe, R. Yang, A. Halageri, W. Silversmith, S. Gerhard, A. Champion, N. Eckstein, D. Ih, N. Kemnitz, M. Castro, Z. Jia, J. Wu, E. Mitchell, B. Nehoran, S. Mu, J. A. Bae, R. Lu, R. Morey, K. Kuehner, D. Brittain, C. S. Jordan, D. J. Anderson, R. Behnia, S. S. Bidaye, A. Borst, E. Chiappe, F. Collman, K. J. Colodner, A. Dacks, B. Dickson, J. Funke, D. Garcia, S. Hampel, V. Hartenstein, B. Hassan, C. Helfrich-Forster, W. Huetteroth, J. Kim, S. S. Kim, Y.-J. Kim, J. Y. Kwon, W.-C. Lee, G. A. Linneweber, G. Maimon, R. Mann, S. Noselli, M. Pankratz, L. Prieto-Godino, J. Read, M. Reiser, K. von Reyn, C. Ribeiro, K. Scott, A. M. Seeds, M. Selcho, M. Silies, J. Simpson, S. Waddell, M. F. Wernet, R. I. Wilson, F. W. Wolf, Z. Yao, N. Yapici and C. FlyWire (2024). "Whole-brain annotation and multi-connectome cell typing of Drosophila." Nature **634**(8032): 139-152.

Semelidou, O., S. F. Acevedo and E. M. Skoulakis (2018). "Temporally specific engagement of distinct neuronal circuits regulating olfactory habituation in Drosophila." Elife **7**.

Semelidou, O., S. F. Acevedo and E. M. C. Skoulakis (2019). "Accessing Olfactory Habituation in Drosophila melanogaster with a T-maze Paradigm." Bio Protoc **9**(11): e3259.

Siju, K. P., V. Štih, S. Aimon, J. Gjorgjieva, R. Portugues and I. C. Grunwald Kadow (2020). "Valence and State-Dependent Population Coding in Dopaminergic Neurons in the Fly Mushroom Body." Current Biology **30**(11): 2104-2115.e2104.

Smith, J. J., K. Shionoya, R. M. Sullivan and D. A. Wilson (2009). "Auditory stimulation dishabituates olfactory responses via noradrenergic cortical modulation." Neural Plast **2009**: 754014.

Sokal, R. and F. Rohlf (1981). Biometry: the principles and practice of statistics in biological research. 2nd ed.

Steiner, G. Z. and R. J. Barry (2011). "Exploring the mechanism of dishabituation." Neurobiol Learn Mem **95**(4): 461-466.

Steiner, G. Z. and R. J. Barry (2014). "The mechanism of dishabituation." Front Integr Neurosci **8**: 14.

Thinus-Blanc, C., E. Save, B. Poucet and M. C. Buhot (1991). "The effects of reversible inactivations of the hippocampus on exploratory activity and spatial memory." Hippocampus **1**(4): 365-371.

Thompson, R. F. (2009). "Habituation: a history." Neurobiol Learn Mem **92**(2): 127-134.

Thompson, R. F. and W. A. Spencer (1966). "Habituation: a model phenomenon for the study of neuronal substrates of behavior." Psychol Rev **73**(1): 16-43.

Trisal, S., M. Aranha, A. Chodankar, K. VijayRaghavan and M. Ramaswami (2022). "A Drosophila Circuit for Habituation Override." J Neurosci **42**(14): 2930-2941.

Trisal, S., K. VijayRaghavan and M. Ramaswami (2023). "Habituation of Sugar-Induced Proboscis Extension Reflex and Yeast-Induced Habituation Override in Drosophila melanogaster." Bio Protoc **13**(23): e4891.

Tully, T. and W. G. Quinn (1985). "Classical conditioning and retention in normal and mutant Drosophila melanogaster." J Comp Physiol A **157**(2): 263-277.

Vogt, K., C. Schnaitmann, K. V. Dylla, S. Knapek, Y. Aso, G. M. Rubin and H. Tanimoto (2014). "Shared mushroom body circuits underlie visual and olfactory memories in Drosophila." Elife **3**: e02395.

Vrontou, E., L. Groschner, S. Szydlowski, R. Brain, A. Krebbers and G. Miesenböck (2021). "Response competition between neurons and antineurons in the mushroom body." Curr Biol. **31**(22): 4911-4922.e4914.

Waddell, S. (2013). "Reinforcement signalling in Drosophila; dopamine does it all after all." Current Opinion in Neurobiology **23**(3): 324-329.

Wang, D. and M. A. Arbib (1992). "Modeling the dishabituation hierarchy: the role of the primordial hippocampus." Biol Cybern **67**(6): 535-544.

Wang, K., J. Gong, Q. Wang, H. Li, Q. Cheng, Y. Liu, S. Zeng and Z. Wang (2014). "Parallel pathways convey olfactory information with opposite polarities in Drosophila." Proceedings of the National Academy of Sciences of the United States of America, **111**(8): 3164–3169.

Winding, M., B. D. Pedigo, C. L. Barnes, H. G. Patsolic, Y. Park, T. Kazimiers, A. Fushiki, I. V. Andrade, A. Khandelwal, J. Valdes-Aleman, F. Li, N. Randel, E. Barsotti, A. Correia, R. D. Fetter, V. Hartenstein, C. E. Priebe, J. T. Vogelstein, A. Cardona and M. Zlatic (2023). "The connectome of an insect brain." Science **379**(6636): eadd9330.

Wu, C. L., M. F. Shih, P. T. Lee and A. S. Chiang (2013). "An octopamine-mushroom body circuit modulates the formation of anesthesia-resistant memory in Drosophila." Curr Biol **23**(23): 2346-2354.

Yamagata, N., T. Ezaki, T. Takahashi, H. Wu and H. Tanimoto (2021). "Presynaptic inhibition of dopamine neurons controls optimistic bias." eLife **10**: e64907.

Yamagata, N., T. Ichinose, Y. Aso, P. Y. Plaçais, A. B. Friedrich, R. J. Sima, T. Preat, G. M. Rubin and H. Tanimoto (2015). "Distinct dopamine neurons mediate reward signals for short- and long-term memories." Proc Natl Acad Sci U S A **112**(2): 578-583.

Yu, D., D. B. Akalal and R. L. Davis (2006). "Drosophila alpha/beta mushroom body neurons form a branch-specific, long-term cellular memory trace after spaced olfactory conditioning." Neuron **52**(5): 845-855.

Yu, D., A. Ponomarev and R. L. Davis (2004). "Altered representation of the spatial code for odors after olfactory classical conditioning; memory trace formation by synaptic recruitment." Neuron **42**(3): 437-449.

Zhang, S. and G. Roman (2013). "Presynaptic inhibition of gamma lobe neurons is required for olfactory learning in Drosophila." Curr Biol **23**(24): 2519-2527.

Zhao, X., D. Lenek, U. Dag, B. J. Dickson and K. Keleman (2018). "Persistent activity in a recurrent circuit underlies courtship memory in Drosophila." eLife **7**: e31425.

Zhou, M., N. Chen, J. Tian, J. Zeng, Y. Zhang, X. Zhang, J. Guo, J. Sun, Y. Li, A. Guo and Y. Li (2019). "Suppression of GABAergic neurons through D2-like receptor secures efficient conditioning in Drosophila aversive olfactory learning." PNAS **116**: 5118–5125.

FIGURE LEGENDS

Figure 1: Olfactory habituation and heterosensory and homosensory dishabituation.

A) The model of short exposure olfactory habituation (Semelidou, Acevedo et al. 2018), establishing that habituation requires inhibition of the LH-driven innate avoidance response to OCT. Model created with Biorender.com.

B-G) Mean Performance Indices ± SEM are shown in all panels. The naïve avoidance response (AVD) is shown by the white bar for OCT and white striped bar for yeast odor (YO). The habituated response (HAB) is shown by the grey bars for OCT and the striped, grey bar for YO. The dishabituated response is shown in magenta for the footshock dishabituator, in orange for YO and in cyan/petrol for OCT. Stars indicate significant differences ($p<0.005$) from the habituated response and daggers significant difference ($p<0.005$) from naïve avoidance. All statistical details are presented in Supplemental Table 1.

B,C) Naïve responses of Canton-S and w^{1118} flies to OCT (AVD) and habituated (HAB) responses to OCT, dishabituated either by a single 45V electric shock (bolt) or a puff of yeast odor (plume). n=14 for B and n=12 for C.

D) Naïve response of w^{1118} and $Orco^{2}$ homozygotes to OCT and YO. Daggers indicate significant differences between the respective naïve responses to OCT and YO of $Orco^{2}$ homozygotes controls. n=12

E) Footshock habituation cannot be dishabituated by YO presentation in $Orco^{2}$ homozygotes, unlike in control animals. n=16.

F) Time-dependent changes in the response of w^{1118} flies to YO. Daggers indicate significant differences ($p<0.005$) between the responses after 10 and 90 sec compared to the shortest exposure (5 sec) to YO. n=13

G) Time-dependent changes in the response of w^{1118} flies to OCT. Daggers indicate significant differences ($p<0.005$) between the response after 90 sec compared to the shorter exposures (5 and 10 sec) to OCT. n=14

H) Habituation of control flies to YO and dishabituation by OCT presentation. n=16.

Figure 2: The mushroom bodies are essential for homosensory and heterosensory dishabituation.

A) Schematic of the MB illustrating its tripartite structure.

B-F) Mean Performance Indices ± SEM are shown in all figures. The naïve response is shown in white bars and is always significantly different from the habituated response (grey bars). Heterosensory (footshock) dishabituation is indicated by the bolt and homosensory (YO), by the plume. Exposure to blue light is indicated by the LED bulbs and increasing intensity (as indicated by the Volts) by deepening shades of blue. Stars in all Figures indicate significant differences ($p<0.005$), from the habituated response and daggers significant difference ($p<0.005$) from naïve avoidance. All statistical details are presented in Supplemental Table 1.

B) Functional silencing of the MB neurons (IN) with UAS-shibire^{ts} under dncGal4 resulted in the expected habituation after 4 min of OCT exposure, but no dishabituation after stimulation with a 45V electric shock (magenta bar) or YO (orange bar). At the permissive conditions (UN), habituation and both types of dishabituation were not affected. n=14

C) Flies expressing ChR2XXL in their MBs avoid, habituate and dishabituate with footshock or YO normally. Photoactivation of MB neurons in OCT-habituated flies with three different light intensities of 4.5V, 5V and 6V, restored OCT avoidance at all intensities. n=16

D) Photoactivation of MB neurons in naïve flies did not affect OCT avoidance. n=16.

E) Control dncGal4>+ and UAS-shibire^{ts}>+ flies were subjected to the same induction conditions as the experimental group and did not present habituation or dishabituation impairments. n=14.

F) Control dncGal4>+, not expressing ChR2XXL did not dishabituate upon photoactivation eliminating the possibility of dishabituation via visual stimulation. n=16.

G) Blue light exposure at all intensities used did not affect OCT avoidance in naïve flies. n=16.

Figure 3: Distinct MBns regulate olfactory habituation and dishabituation.

Except for the schematics, mean Performance Indices ± SEM are shown in all figures. The naïve response is shown in white bars and is always significantly different from the habituated response (grey bars). Heterosensory (footshock) dishabituation is indicated by the bolt and homosenssory (YO), by the plume. Exposure to blue light is indicated by the LED bulbs and increasing intensity (as indicated by the Volts) by deepening shades of blue. Stars in all Figures indicate significant differences ($p<0.005$), from the habituated response and daggers significant difference ($p<0.005$) from naïve avoidance. All statistical details are presented in Supplemental Table 1.

A) Schematic of the axonal projections (lobes) of αβ MBns highlighted in light red.

B) Functional silencing (IN) of the αβ neurons with UAS-shibire^{ts} under 17dGal4 compared to control animals carrying, but not expressing the transgene (UN). Dishabituation with a 45V electric shock (magenta) and YO (orange), remained unaffected in both conditions. n=12. Additional controls run in parallel are presented in Supplemental Table 1.

C) Photoactivation of αβ neurons with 3 light intensities in OCT-habituated flies restored avoidance of the odorant. n=14.

D) Photoactivation of αβ neurons in naïve flies with 3 light intensities did not affect OCT avoidance. n=14.

E) Schematic of the axonal projections (lobes) of α′β′ MBns highlighted in purple.

F) Functional silencing (IN) of α′β′ neurons with UAS-shibire^{ts} under VT030604Gal4 compared to control animals carrying, but not expressing the transgene (UN). Avoidance, habituation and dishabituation with a 45V electric shock (magenta) or YO (orange) were not significantly different upon silencing α′β′ MBns and were also unaffected in the UN condition. n=14. Additional controls run in parallel are presented in Supplemental Table 1.

G) Photoactivation of α′β′ neurons under VT030604Gal4 in OCT-habituated flies with 3 light intensities did not restore avoidance, while a single footshock and YO exposure did. n=12.

H) Photoactivation of α′β′ MBns in naïve flies resulted in light intensity dependent decrement in OCT avoidance. n=12.

I) Schematic of the axonal projections (lobes) of γ MBns highlighted in blue.

J) Functional silencing (IN) of γ neurons with UAS-shibire^{ts} under VT44966Gal4 compared to control animals carrying, but not expressing the transgene (UN). Dishabituation with a 45V electric shock (magenta) and YO (orange), remained unaffected in both conditions. n=12. Additional controls run in parallel are presented in Supplemental Table 1.

K) Photoactivation of γ neurons under VT44966Gal4 in OCT-habituated flies with 3 light intensities reinstated avoidance in light intensity dependent manner. n=14.

L) Photoactivation of γ MBns in naïve flies did not affect OCT avoidance. n=14.

Figure 4: Dopaminergic Neurons drive Heterosensory and Homosensory dishabituation in Drosophila.

Except for the schematics, mean Performance Indices ± SEM are shown in all figures. The naïve response is shown in white bars and is always significantly different from the habituated response (grey bars). Heterosensory (footshock) dishabituation is indicated by the bolt and homosenssory (YO), by the plume. Exposure to blue light is indicated by the LED bulbs. Stars in all Figures indicate significant differences ($p<0.005$), from the habituated response and daggers significant difference ($p<0.005$) from naïve avoidance. All statistical details are presented in Supplemental Table 1.

A,B,C) Schematics of all Dopaminergic neurons (DANs), the PAM-DAN cluster and the PPL1 DAN cluster, innervating the MB.

D) Functional silencing of all DANs (IN), with UAS-shibire^{ts} under pleGal4 did not affect habituation after 4 min of OCT exposure, but dishabituation after stimulation with a 45V electric shock (magenta bar) and YO (orange bar) were impaired. At the permissive conditions (UN), habituation and both types of dishabituation were not affected. n=16. Additional controls run in parallel are presented in Supplemental Table 1.

E) Photoactivation of all DANs in OCT-habituated flies with three different light intensities restored OCT avoidance in light intensity dependent manner. At 4.5 V avoidance was no different from the habituated performance ($p=0.3449$). At 5V, while significantly different from the habituated performance ($p<0.0001$) it was also different ($p=0.0069$) from the naïve avoidance. marginally n=16

F) Photoactivation of all DANs in naïve flies without any exposure to OCT did not affect OCT avoidance. n=14.

G) Functional silencing (IN) of PAM-DANs with UAS-shibire^{ts} under 0273Gal4 was permissive to habituation after 4 min of OCT exposure and shock dishabituation (magenta bar), but no dishabituation after stimulation with YO (orange bar). At the permissive conditions (UN) YO dishabituation was not affected. n=16. Additional controls run in parallel are presented in Supplemental Table 1.

H) Photoactivation of PAM-DANs in OCT-habituated flies restored OCT avoidance only at the higher light intensity. n=10.

I) Photoactivation of PAM-DANs in naïve flies without any exposure to OCT did not affect OCT avoidance. n=12.

J) Functional silencing (IN) of PPL1-DANs with UAS-shibire^{ts} under MB504BGal4 did not affect habituation after 4 min of OCT exposure and dishabituation with YO (orange bar), but dishabituation after stimulation with a 45 V electric shock (magenta bar) was impaired. At the permissive conditions

(UN) shock dishabituation was not affected. n=16. Additional controls run in parallel are presented in Supplemental Table 1.

K) Photoactivation of PPL1-DANs in OCT-habituated flies restored OCT avoidance only at the lower light intensity. n=16.

L) Photoactivation of PPL1-DANs in naïve flies without any exposure to OCT did not affect OCT avoidance. n=16.

Figure 5: The role of PPL1 neuronal subsets in heterosensory dishabituation.

Mean Performance Indices ± SEM are shown in all figures. The naïve response is shown in white bars and is always significantly different from the habituated response (grey bars). Heterosensory (footshock) dishabituation is indicated by the bolt and homosensory (YO), by the plume. Exposure to blue light is indicated by the LED bulbs. Stars in all Figures indicate significant differences ($p<0.005$), from the habituated response and daggers significant difference ($p<0.005$) from naïve avoidance. All statistical details are presented in Supplemental Table 1.

A,D) Schematics of PPL1-γ2α′1 and PPL1-γ1pedc neurons.

B) Photoactivation of PPL1-γ2α′1 neurons under MB296BGal4 in OCT-habituated flies restored OCT avoidance at the low, but not the stronger light intensities ($p=0.0087$ *versus* the habituated response and $p=0.0162$ *versus* naïve avoidance). n=18

C) Photoactivation of PPL1-γ2α′1 neurons in naïve flies resulted in light intensity dependent decrement in OCT avoidance from naïve avoidance ($p=0.0064$ at 5V and $p<0.0001$ at 6V). n=17.

E) Photoactivation of PPL1-γ1pedc neurons under MB320CGal4 in OCT-habituated flies restored OCT avoidance at the low and strong light intensities respectively. n=16.

F) Photoactivation of PPL1-γ1pedc neurons in naïve flies resulted in light intensity dependent decrement in OCT avoidance with performance at naïve levels only at 4.5V ($p=0.6747$). n=12.

G,J) Schematics of PPL1-α2-α′2 and PPL1-α3 neurons.

H) Photoactivation of PPL1-α2-α′2 neurons under MB058BGal4 in OCT-habituated flies with 3 light intensities did not restore avoidance, while the response recovered after a single footshock and YO exposure. n=14 for H.

I,L) Photoactivation of PPL1-α2-α′2 and PPL1-α3 neurons in naïve flies with 3 light intensities did not affect OCT avoidance. (n=12 for I and n=14 for L).

K) Photoactivation PPL1-α3 neurons under MB630BGal4 in OCT-habituated flies with 3 light intensities did not restore avoidance, while the response recovered after a single footshock and YO exposure. n=16.

L) Photoactivation of PPL1-α3 neurons in naïve flies with 3 light intensities did not affect OCT avoidance. n=14.

Figure 6: APL and other GABAergic neurons regulate homosensory Dishabituation.

Mean Performance Indices ± SEM are shown in all figures. The naïve response is shown in white bars and is always significantly different from the habituated response (grey bars). Heterosensory (footshock) dishabituation is indicated by the bolt and homosensory (YO), by the plume. Exposure to blue light is indicated by the LED bulbs. Stars in all Figures indicate significant differences ($p<0.005$), from the habituated response and daggers significant difference ($p<0.005$) from naïve avoidance. All statistical details are presented in Supplemental Table 1.

(A) Schematic of APL neurons innervating the MB.

(B) Functional silencing of APL neurons with UAS-shibire^{ts} under APLGal4 was permissive to habituation after 4 min OCT exposure and shock dishabituation (magenta bar), but dishabituation after YO exposure (orange bar) was impaired. At the permissive conditions (UN) YO dishabituation was not affected. n=12. Additional controls run in parallel are presented in Supplemental Table 1.

(C) Photoactivation of APL neurons in OCT-habituated flies restored OCT avoidance only at the higher light intensity. n=14.

(D) Photoactivation of APL neurons in naïve flies with 3 light intensities did not affect OCT avoidance. n=14.

(E) Abrogation of the GABAergic output of APL neurons with UAS-GAD-RNAi under APLGal4;Gal80^{ts} at 30°C did not affect habituation after 4 min OCT exposure or dishabituation with shock (magenta bar), but dishabituation with YO stimulation was impaired (orange bar). At the permissive conditions (UN) dishabituation with YO was not affected. n=14.

(F) Abrogation of the octopaminergic output of APL neurons via UAS-TBH-RNAi under APLGal4;Gal80^{ts} at 30°C, compared to control animals carrying, but not expressing the transgene (UN). Dishabituation with a 45V electric shock (magenta) and YO (orange), although partially reduced, was sufficient in both conditions. n= 12.

(G) Photoactivation of GABAergic neurons in OCT-habituated flies restored OCT avoidance only at the lower light intensity. n=20.

(H) Photoactivation of GABAergic neurons in naïve flies resulted in light intensity dependent decrement in OCT avoidance. n=20.

(I) Photoactivation of MBONs 8 and 9 under the MB110CGal4 driver in OCT-habituated flies restored OCT avoidance at the higher light intensities, but not at 4.5V ($p=0.0062$). n=14.

Figure 7: Ellipsoid Body Neurons do not participate in olfactory Habituation nor in Dishabituation. Mean Performance Indices ± SEM are shown in all figures. The naïve response is shown in white bars and is always significantly different from the habituated response (grey bars). Heterosensory (footshock) dishabituation is indicated by the bolt and homosensory (YO), by the plume. Exposure to blue light is indicated by the LED bulbs. Stars in all Figures indicate significant differences ($p<0.005$), from the habituated response and daggers significant difference ($p<0.005$) from naïve avoidance. All statistical details are presented in Supplemental Table 1.

(A) Schematic of Ellipsoid Body (EB) neurons.

(B) Functional silencing of the EB neurons with UAS-shibire^{ts} under RDLGal4 compared to control animals carrying, but not expressing the transgene (UN). Olfactory habituation and dishabituation with a 45V electric shock (magenta) and YO (orange), remained unaffected in both conditions. n=14.

(C) Photoactivation of EB neurons under RDLGal4 in OCT-habituated flies with 3 light intensities did not restore avoidance, while a single footshock and YO exposure did. n=18. Additional controls run in parallel are presented in Supplemental Table 1.

(D) Photoactivation of EB neurons in naïve flies with 3 light intensities did not affect OCT avoidance. n=12.

Figure 8. A model of the neuronal circuits underlying (A) Habituation Latency (B) Habituation and (C) Dishabituation.

Main neuronal compartments mediating the behavior comprise the antennal lobe (AL-green), the lateral horn (LH-orange) and the mushroom body (MB), divided in three lobes (α/β-pink, α'/β'-purple, γ-blue). In the stick figure the same neuronal compartments are presented as grey boxes oriented by a dashed line. Model created with Biorender.com

Distinct neuronal subsets are marked with different colors; Olfactory sensory neurons (OSNs-black), excitatory local interneurons (eLN-light orange), inhibitory local Interneurons (iLN-red), excitatory projection neurons (ePN-dark cyan/petrol), inhibitory local Interneurons (iLN-brown), mushroom body output neurons (MBONs-black), anterior paired lateral neuron (APL-black), PAM dopaminergic neurons (PAM-dark green), PPL1 dopaminergic neuronal subsets (PPL1-γ2α'1 & PPL1-γ1pedc both in yellow). Neurons not involved in the progression from latency to habituation and ultimately in the reinstatement of avoidance levels (dishabituation), are colored light grey for clarity. Synapses thought to be electrical connecting interneurons of the AL such as the eLN,iLN & ePN are indicated by -||-. Synapses and arrows show the projections of particular neurons (information path) in the circuit. Arrowheads indicate activation, while blunt arrows inhibition.

A) Prolonged exposure to OCT negates the ePN inhibition, activating iPNs and drive habituation.

B) To reinstate avoidance upon the presentation of a novel stimulus, neurotransmission from different neurons innervating the MB is required. For heterosensory dishabituation input from PPL1-γ2α'1 and PPL1-γ1pedc DANs to the MB is essential to encode the dishabituator (shock). In contrast, homosensory dishabituation requires synergy between the PAM cluster and APL neurons. Apl seems crucial for homosensory dishabituation potentially helping to differentiate the identity of the novel odor from the one habituated to. MB activation via PPL1, PAM and APL neuron switches again the MB output reactivating the α/β along with γ MBns, reinstating avoidance levels through LH activation, via different MBONs combinations.

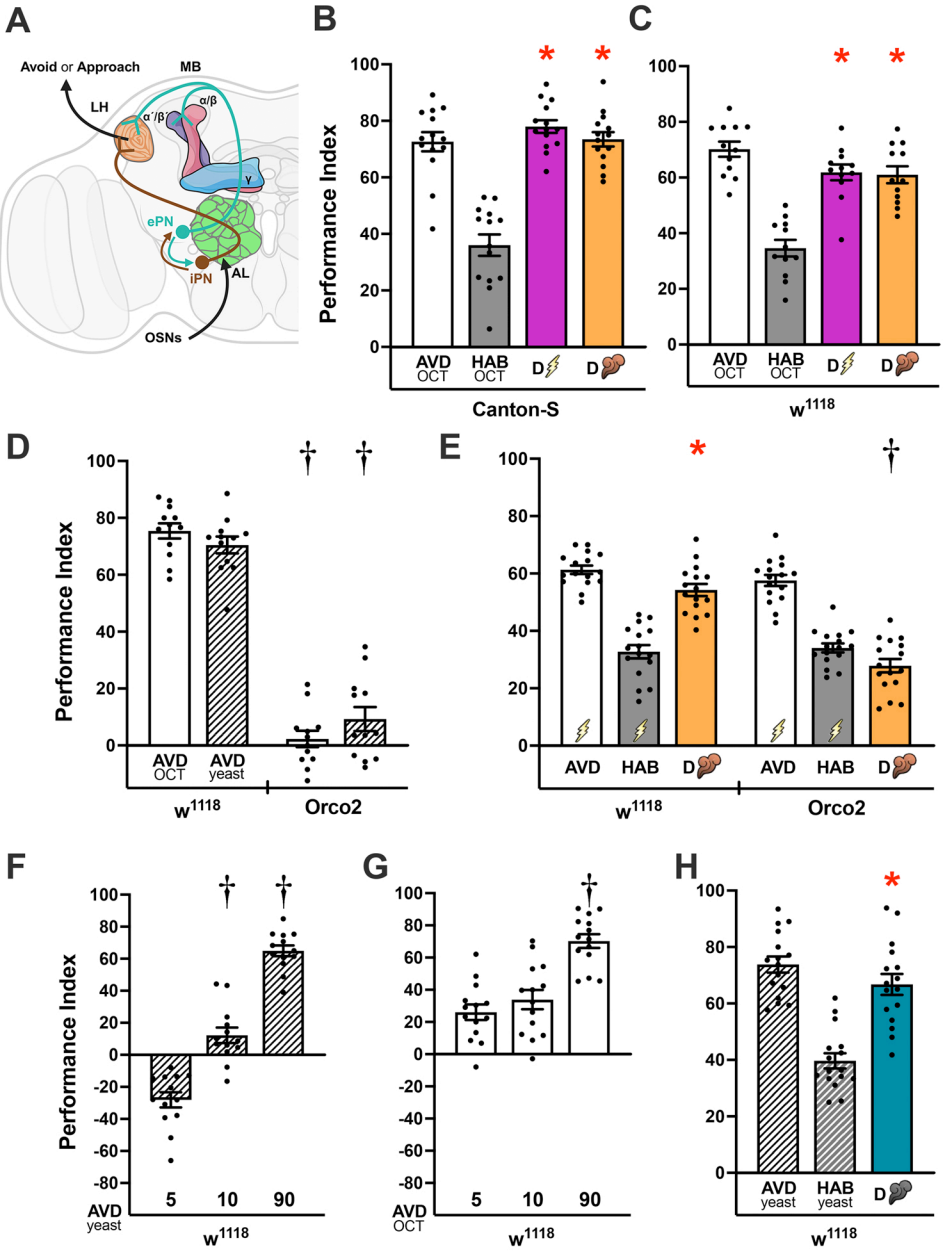
A
Avoid or Approach
MB
LH
α′/β′
α/β
γ
ePN
iPN
AL
OSNs
B
C
Performance Index
AVD OCT
HAB OCT
D
Canton-S
w1118
D
E
AVD yeast
Orco2
F
G
H
5
10
90

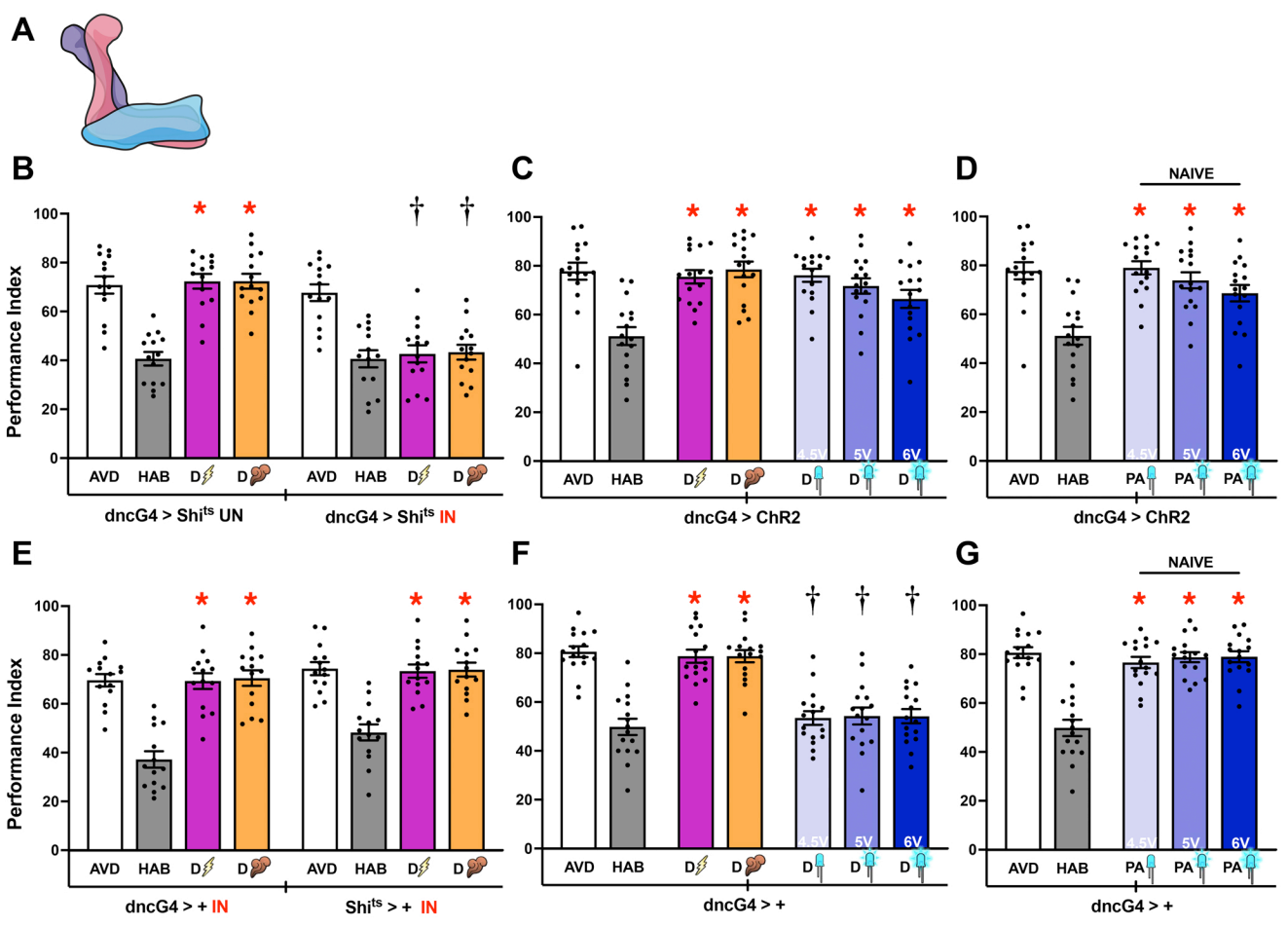
A
B
C
D
NAIVE
Performance Index
AVD
HAB
D
PA
4.5V
5V
6V
dncG4 > Shi^ts UN
dncG4 > Shi^ts IN
dncG4 > ChR2
E
F
G
dncG4 > + IN
Shi^ts > + IN
dncG4 > +

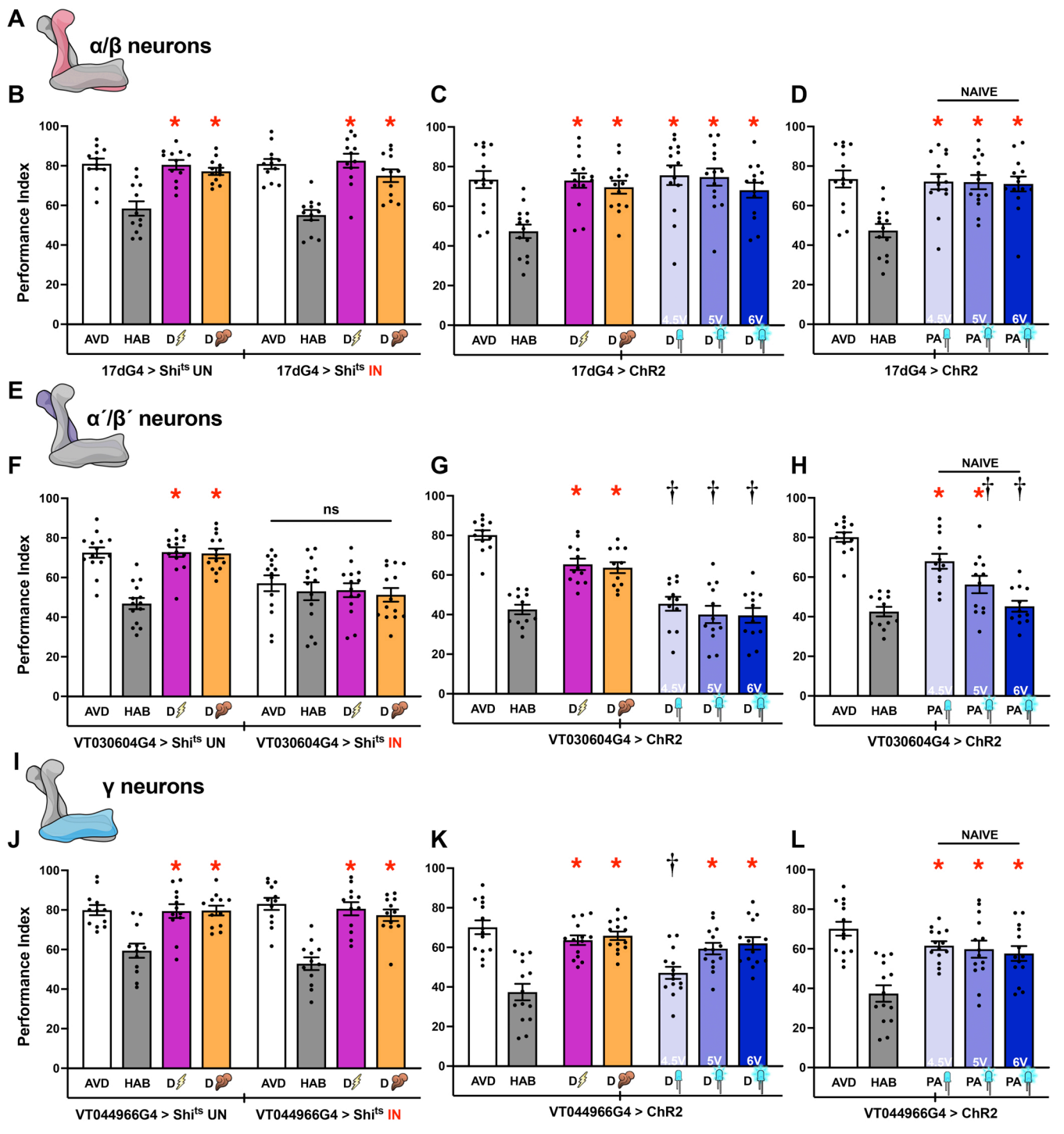
A
α/β neurons
B
C
D
NAIVE
Performance Index
AVD
HAB
D
PA
4.5V
5V
6V
17dG4 > Shi^ts UN
17dG4 > Shi^ts IN
17dG4 > ChR2
E
α´/β´ neurons
F
G
H
ns
VT030604G4 > Shi^ts UN
VT030604G4 > Shi^ts IN
VT030604G4 > ChR2
I
γ neurons
J
K
L
VT044966G4 > Shi^ts UN
VT044966G4 > Shi^ts IN
VT044966G4 > ChR2

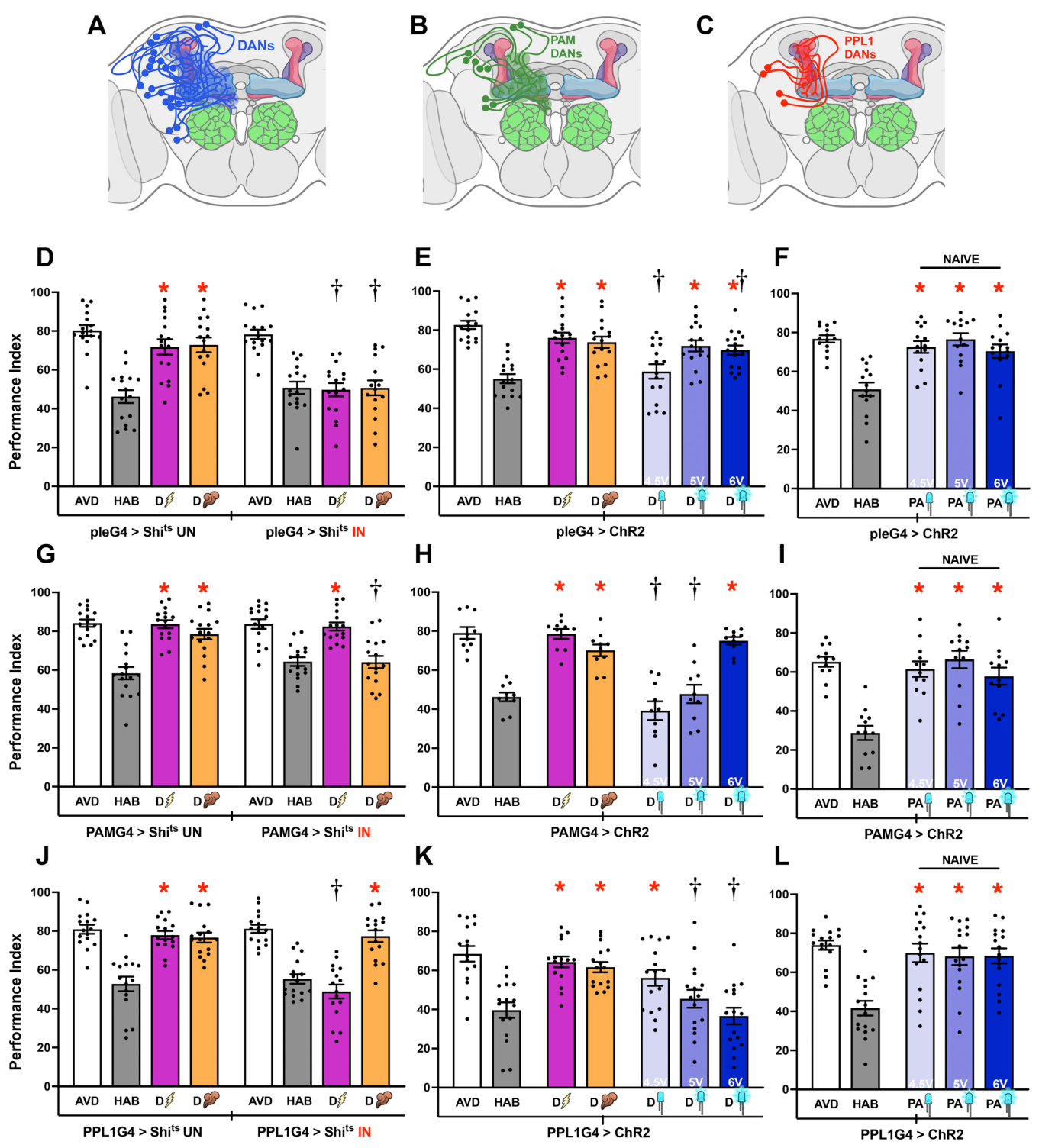
A
DANs
B
PAM DANs
C
PPL1 DANs
D
E
F
NAIVE
G
H
I
NAIVE
J
K
L
NAIVE
Performance Index
AVD
HAB
D
PA
4.5V
5V
6V
pleG4 > Shi^ts UN
pleG4 > Shi^ts IN
pleG4 > ChR2
PAMG4 > Shi^ts UN
PAMG4 > Shi^ts IN
PAMG4 > ChR2
PPL1G4 > Shi^ts UN
PPL1G4 > Shi^ts IN
PPL1G4 > ChR2

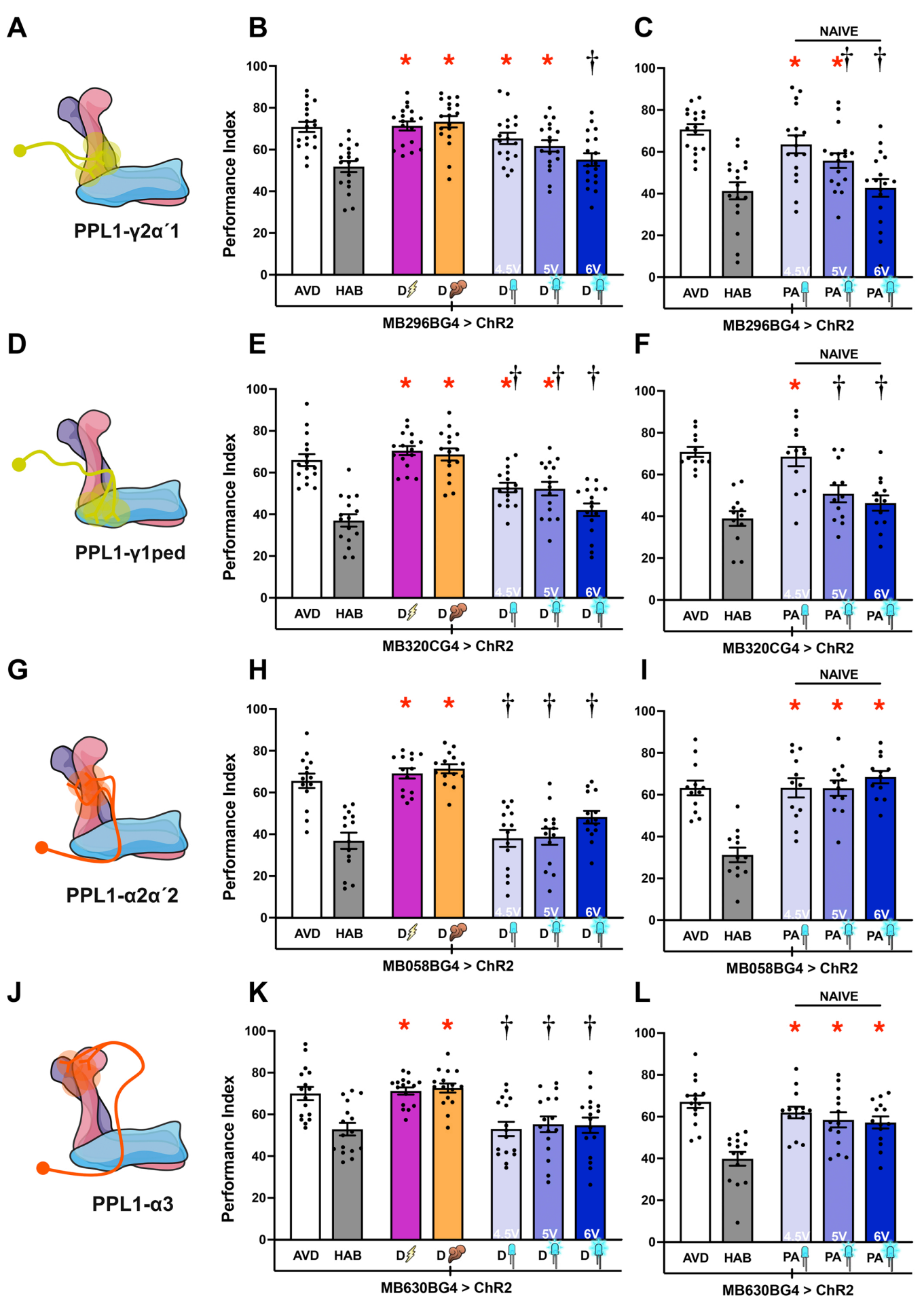
A
PPL1-γ2α´1
B
Performance Index
AVD
HAB
D
D
D
D
D
4.5V
5V
6V
MB296BG4 > ChR2
C
NAIVE
PA
PA
PA
MB296BG4 > ChR2
D
PPL1-γ1ped
E
MB320CG4 > ChR2
F
MB320CG4 > ChR2
G
PPL1-α2α´2
H
MB058BG4 > ChR2
I
MB058BG4 > ChR2
J
PPL1-α3
K
MB630BG4 > ChR2
L
MB630BG4 > ChR2

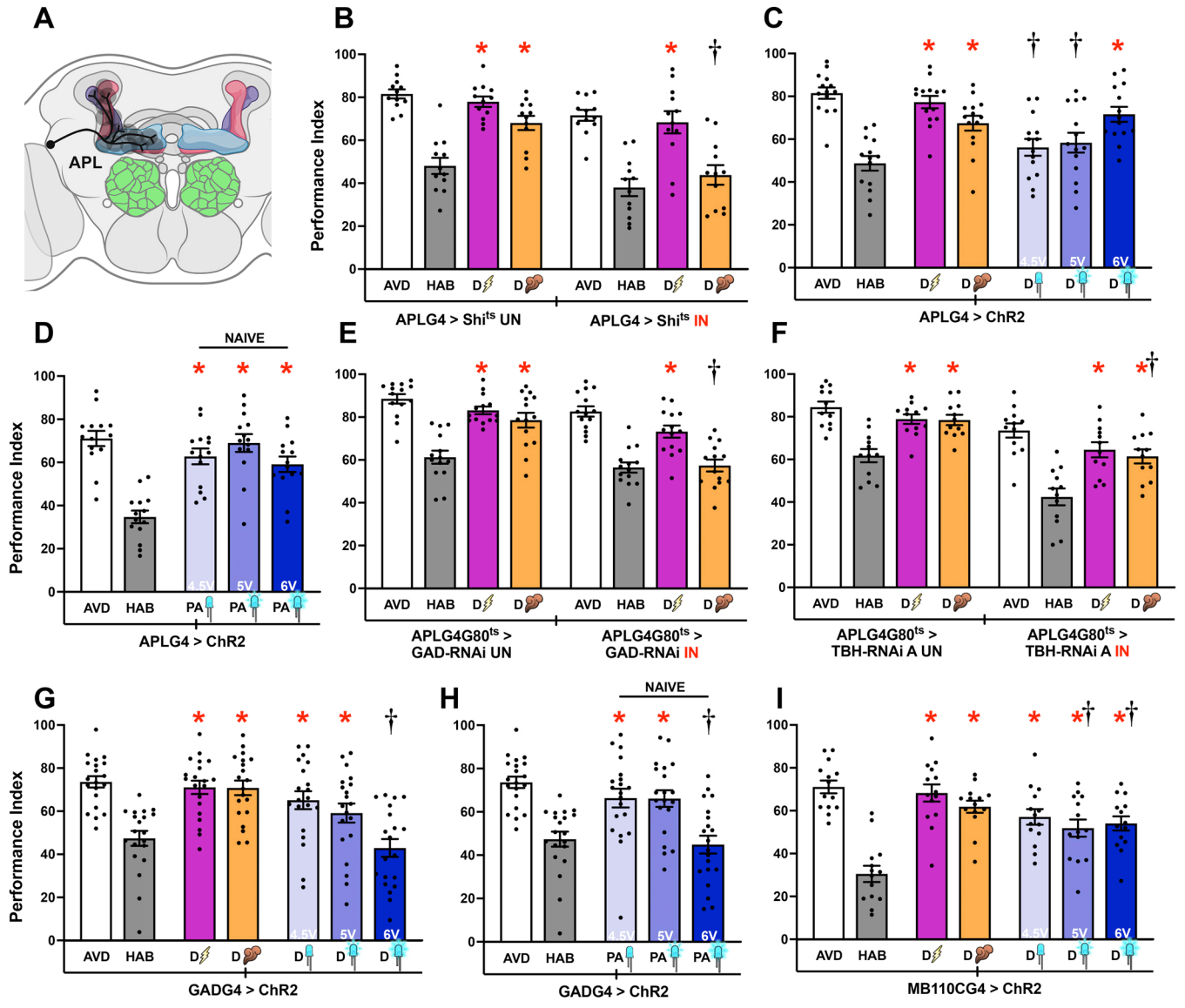
A
APL
B
Performance Index
AVD
HAB
D
APLG4 > Shi^ts UN
APLG4 > Shi^ts IN
C
4.5V
5V
6V
APLG4 > ChR2
D
NAIVE
PA
APLG4 > ChR2
E
APLG4G80^ts > GAD-RNAi UN
APLG4G80^ts > GAD-RNAi IN
F
APLG4G80^ts > TBH-RNAi A UN
APLG4G80^ts > TBH-RNAi A IN
G
GADG4 > ChR2
H
GADG4 > ChR2
I
MB110CG4 > ChR2

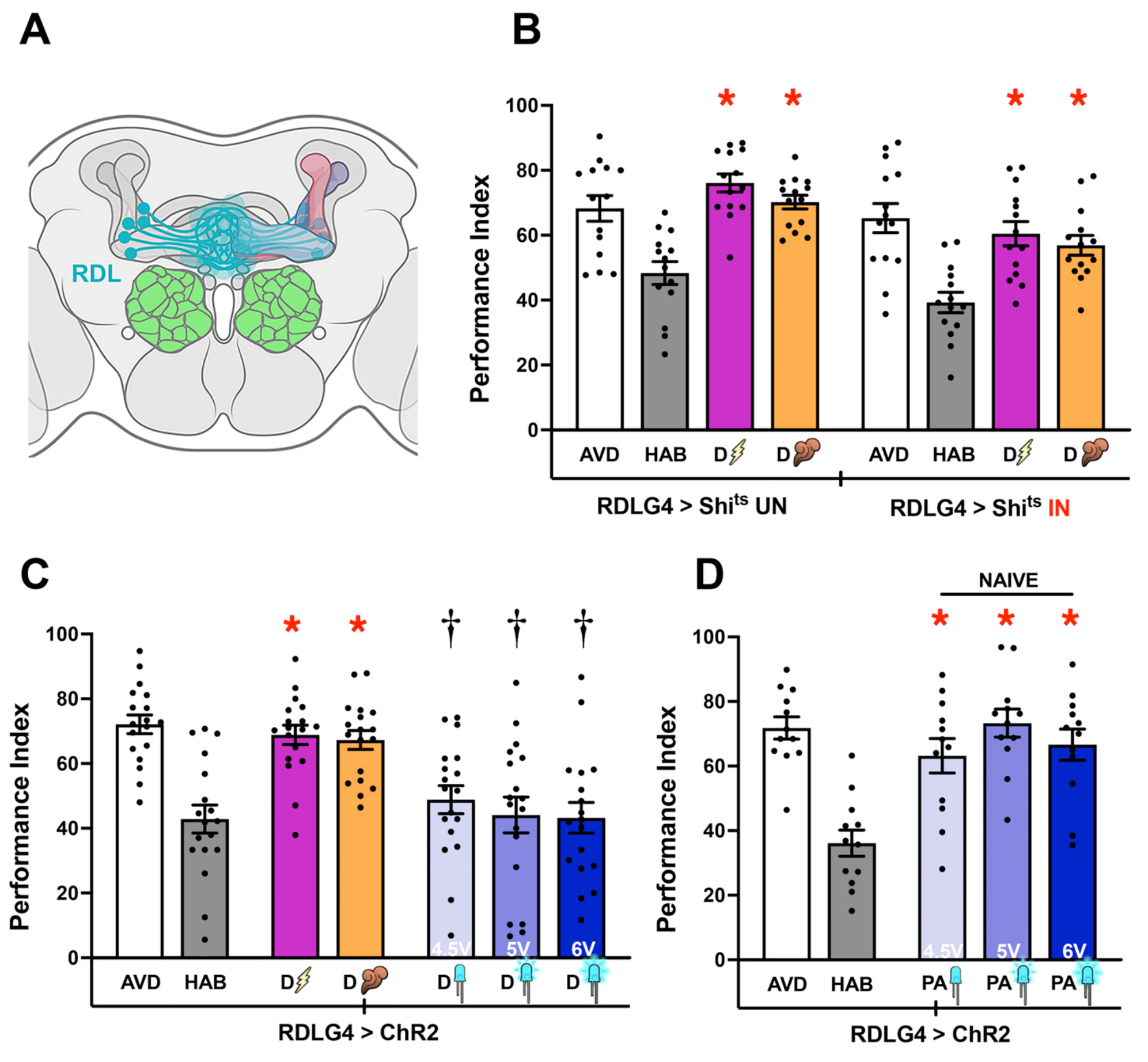
A
RDL
B
Performance Index
100
80
60
40
20
0
AVD
HAB
D
D
AVD
HAB
D
D
RDLG4 > Shi^ts UN
RDLG4 > Shi^ts IN
C
Performance Index
AVD
HAB
D
D
D
D
D
4.5V
5V
6V
RDLG4 > ChR2
D
NAIVE
Performance Index
AVD
HAB
PA
PA
PA
4.5V
5V
6V
RDLG4 > ChR2

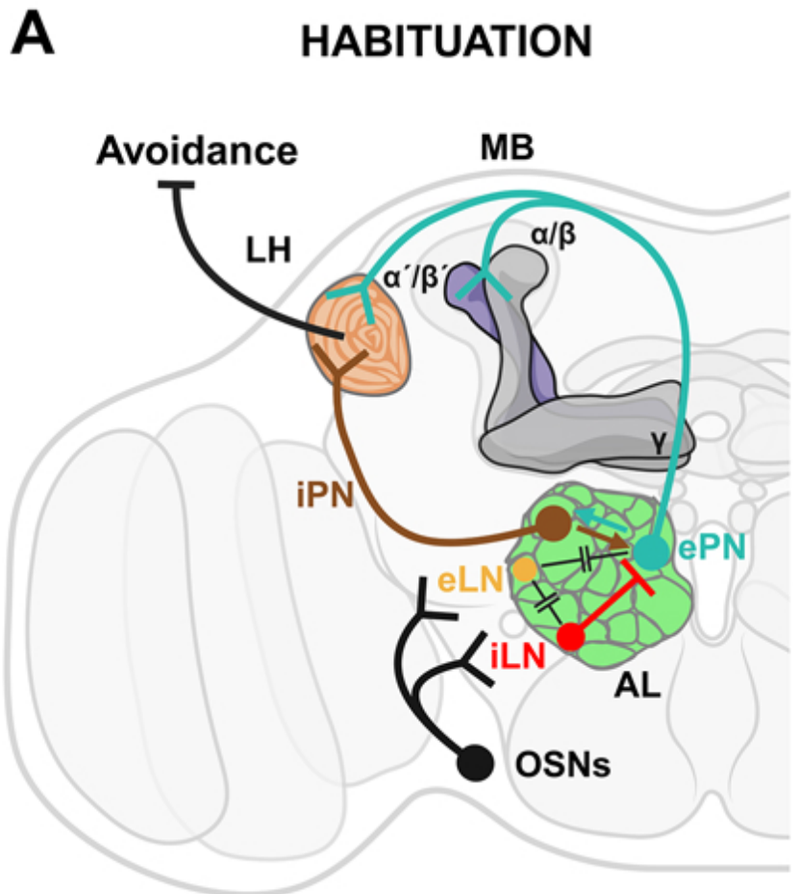
A
HABITUATION
Avoidance
MB
LH
α/β
α´/β´
γ
iPN
ePN
eLN
iLN
AL
OSNs

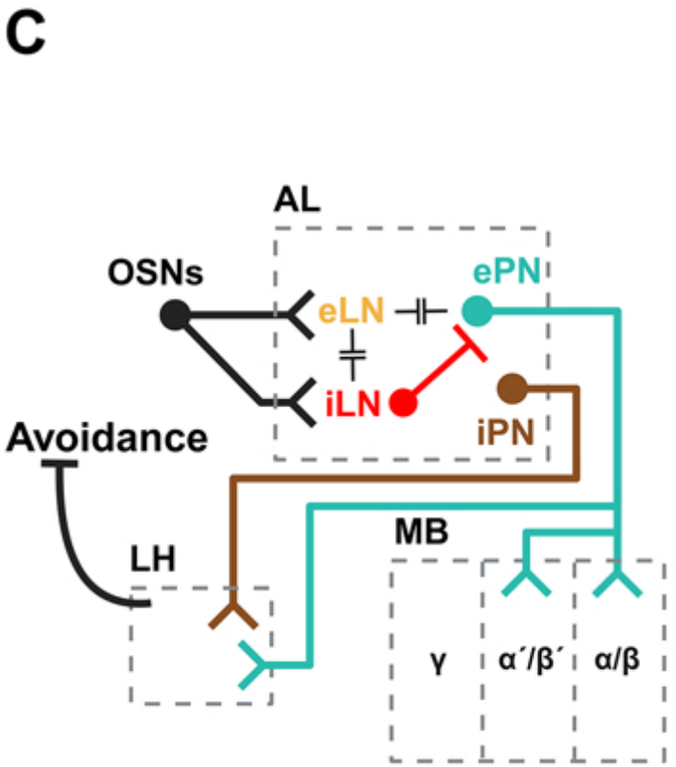
C
AL
OSNs
ePN
eLN
iLN
iPN
Avoidance
MB
LH
γ
α´/β´
α/β

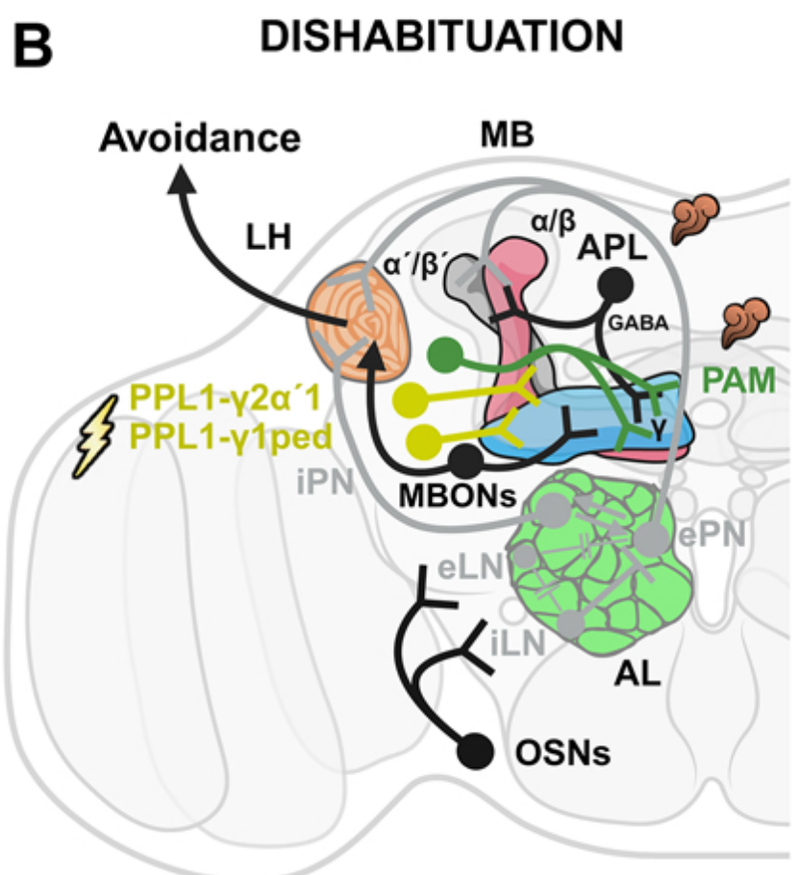
B
DISHABITUATION
Avoidance
MB
LH
α/β
α´/β´
APL
GABA
PAM
γ
PPL1-γ2α´1
PPL1-γ1ped
iPN
MBONs
ePN
eLN
iLN
AL
OSNs

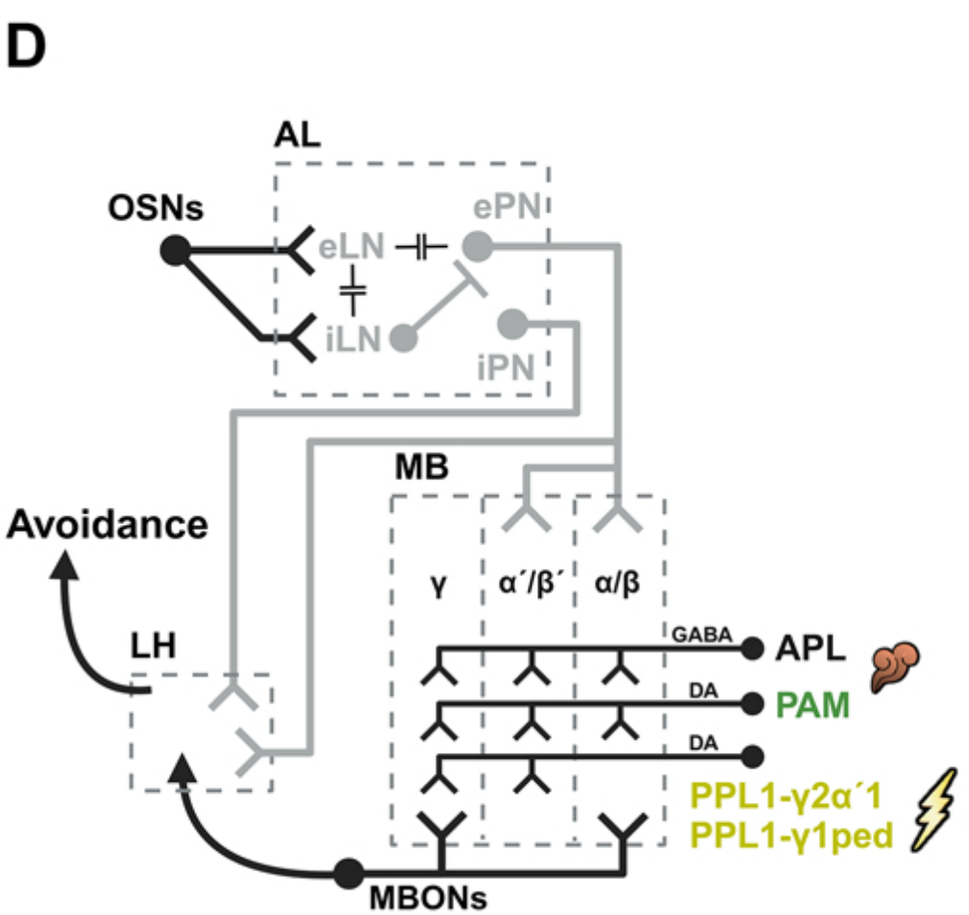
D
AL
OSNs
ePN
eLN
iLN
iPN
MB
Avoidance
γ
α´/β´
α/β
LH
GABA
APL
DA
PAM
DA
PPL1-γ2α´1
PPL1-γ1ped
MBONs