bioRxiv preprint doi: https://doi.org/10.1101/214924; this version posted November 7, 2017. The copyright holder for this preprint (which was not certified by peer review) is the author/funder, who has granted bioRxiv a license to display the preprint in perpetuity. It is made available under aCC-BY-NC 4.0 International license.

Cobwebbing in the city: urbanization-driven shifts in body-size dependent behaviours are decoupled from body size in an orb-web spider

Maxime Dahirel[1,2]*, Maarten De Cock[1] and Dries Bonte[1]

[1] Ghent University, Department of Biology, Terrestrial Ecology unit, K. L. Ledeganckstraat 35, B-9000 Gent, Belgium

[2] Université de Rennes 1/ CNRS, UMR 6553 Ecobio, 263 avenue du Général Leclerc, F-35042 Rennes, France

* corresponding author: maxime.dahirel@yahoo.fr

bioRxiv preprint doi: https://doi.org/10.1101/214924; this version posted November 7, 2017. The copyright holder for this preprint (which was not certified by peer review) is the author/funder, who has granted bioRxiv a license to display the preprint in perpetuity. It is made available under aCC-BY-NC 4.0 International license.

Abstract

1. In animals, behavioural responses may play an important role in determining population persistence in the face of environmental changes. Body size is a key trait central to many life history traits and behaviours. While behaviours are typically assumed to be highly plastic, size correlations may impose constraints on their adaptive value when size itself is subject to environmental changes.
2. Urbanization is an important human-induced environmental change that imposes multiple selection pressures on both body size and (size-constrained) behaviour. How these combine to shape behavioural responses of urban-dwelling species is unclear.
3. Using web-building behaviour, an easily quantifiable behaviour linked to body size, and the garden spider *Araneus diadematus* as a model, we disentangle direct behavioural responses to urbanization and body size constraints across a network of 63 selected populations differing in urbanization intensity at two spatial scales.
4. Spiders were smaller in highly urbanized sites (local scale only), in line with reduced prey availability and the urban heat island effect. The use of piecewise structural equation modelling reveals that despite existing size constraints on web-building behaviour, these size shifts overall have a minor effect on web-building response to urbanization. Spiders altered their web-building behaviours in response to urbanization in ways that are expected to compensate, at least in part, for reduced prey availability. Different components of web-building reacted to urbanization at different scales, which may indicate different balances between the effects of genetic adaptation and plasticity. Although fecundity decreased with local-scale urbanization, *Araneus diadematus* abundance stayed remarkably stable across urbanization gradients, independently of scale and intensity, meaning this strategy appears overall successful at the population level.

bioRxiv preprint doi: https://doi.org/10.1101/214924; this version posted November 7, 2017. The copyright holder for this preprint (which was not certified by peer review) is the author/funder, who has granted bioRxiv a license to display the preprint in perpetuity. It is made available under aCC-BY-NC 4.0 International license.

5. Our results demonstrate that typically responses in size-dependent behaviours may be decoupled from size-correlations, thereby allowing fitness maximisation in novel environments.

Key words: adaptation, confirmatory path analysis, fecundity, foraging, spider web, temperature-size rule

bioRxiv preprint doi: https://doi.org/10.1101/214924; this version posted November 7, 2017. The copyright holder for this preprint (which was not certified by peer review) is the author/funder, who has granted bioRxiv a license to display the preprint in perpetuity. It is made available under aCC-BY-NC 4.0 International license.

Introduction

In animals, behaviour is often considered as the first route to adaptation to rapid environmental changes (Wong & Candolin 2015). Numerous examples of both adaptive and maladaptive behavioural changes in response to e.g. human-induced environmental changes have now been recorded, from changes in personality to alterations of movement and foraging patterns (Lowry, Lill & Wong 2013). The potential costs and constraints associated with these behavioural changes are, however, poorly understood. Behaviours may be linked to metabolic and physiological processes that directly impact fitness (Bonte *et al.* 2012; Debecker *et al.* 2016). When behaviour is correlated to other traits, conflicting selection pressures may hinder adaptation, leading to mismatches between the expressed and optimal behaviours in the new environment (Wong & Candolin 2015). In particular, many behaviours are correlated to body size (e.g. Stevens *et al.* 2014; Gregorič, Kuntner & Blackledge 2015), a key trait that can itself be directly impacted by environmental changes (Oliveira *et al.* 2016; Renauld *et al.* 2016). Increases in temperature, for instance, are expected to lead to reduced body size in ectotherms, in relation to increased metabolic rates (Sheridan & Bickford 2011; Horne, Hirst & Atkinson 2015); when success is body size-dependent, this might shape the optimality of body-size dependent behaviours in the new environment.

Urbanization is one of the most prominent human-induced environmental changes, with cities now harbouring more than half of the global human population (Seto, Güneralp & Hutyra 2012; United Nations Population Division 2015). Direct and indirect impacts of the urbanization process include habitat fragmentation, increased temperatures (the "Urban Heat Island" effect), elevated levels of pollution and changes in resource availability due to the decline of key species and/or the increased availability of anthropogenic food sources (Alberti 2015; Parris 2016). This combination of changes means cities present novel ecological conditions never encountered before in organisms' evolutionary histories (Alberti 2015;

bioRxiv preprint doi: https://doi.org/10.1101/214924; this version posted November 7, 2017. The copyright holder for this preprint (which was not certified by peer review) is the author/funder, who has granted bioRxiv a license to display the preprint in perpetuity. It is made available under aCC-BY-NC 4.0 International license.

Hendry, Gotanda & Svensson 2017; Johnson & Munshi-South 2017), driving changes in community taxonomic and functional composition (Dahirel *et al.* 2017; Piano *et al.* 2017) as well as intraspecific phenotypic changes (Lowry *et al.* 2013; Brans *et al.* 2017b; Alberti *et al.* 2017a; Alberti, Marzluff & Hunt 2017b; Johnson & Munshi-South 2017). Rates of phenotypic change in cities are even often higher than those observed in more natural or other anthropogenic environments (Alberti *et al.* 2017a), making cities key "natural experiments" in evolutionary ecology (Johnson & Munshi-South 2017).

Orb web spiders (Araneae, Araneidae) are a unique model for the study of foraging behaviour, due to their trap-building strategy (Foelix 2010). Indeed, detailed quantification of the orb web structure allows inferences on both the implemented foraging strategies (from web architecture) and the energetic investments in web production (from the amount of produced silk) (Sherman 1994). Web building is additionally coupled to body size both within and among species, with larger spiders on average producing larger, and often less densely structured webs (Gregorič *et al.* 2015). By relating web-building behaviour, individual size and fecundity, it is then possible to understand how changes in environmental conditions directly, but also indirectly affect the adaptive value of these behavioural changes.

We here study and quantify shifts in body size and web building in response to urbanization, using piecewise structural equation models in order to disentangle the relative contribution of size constraints to (adaptive) behavioural changes. We used the garden spider *Araneus diadematus* as a model; this species is considered as a "winner' in relation to urbanization, and dominates urban and non-urban orb web spider communities in western Europe (e.g. Dahirel *et al.* 2017). *A. diadematus* alters its web-building behaviour depending on abiotic conditions and the availability/ characteristics of potential prey (Vollrath, Downes & Krackow 1997; Schneider & Vollrath 1998; Bonte *et al.* 2008); webs are recycled and rebuilt daily, allowing spiders to match currently/recently experienced environmental conditions

bioRxiv preprint doi: https://doi.org/10.1101/214924; this version posted November 7, 2017. The copyright holder for this preprint (which was not certified by peer review) is the author/funder, who has granted bioRxiv a license to display the preprint in perpetuity. It is made available under aCC-BY-NC 4.0 International license.

(Breed *et al.* 1964). As cities harbour smaller prey (Dahirel *et al.* 2017), we expected *Araneus diadematus* to present adaptive shifts in web-building behaviour in response to urbanization, despite reduced size (due to the Urban Heat Island effect) and body size-related constraints leading to reduced web production in cities. We studied urbanization at two independent spatial scales, as environmental correlates of urbanization are scale-dependent (McDonnell & Hahs 2015; Kaiser, Merckx & Van Dyck 2016), and contrasting responses between scales may also yield insights on the relative balance between plasticity and genetic adaptation (Richardson *et al.* 2014). We additionally analyse spider abundance and fecundity data to investigate potential fitness costs of adaptation to city life.

bioRxiv preprint doi: https://doi.org/10.1101/214924; this version posted November 7, 2017. The copyright holder for this preprint (which was not certified by peer review) is the author/funder, who has granted bioRxiv a license to display the preprint in perpetuity. It is made available under aCC-BY-NC 4.0 International license.

Material and Methods

Study species

Araneus diadematus Clerck 1757 is a common orb-weaving spider present across the Holarctic in a wide range of natural and human-altered environments (Lee & Thomas 2002; Nentwig *et al.* 2016). Its distinctive dorsal cross pattern makes field identification easy (Roberts 1993). Females usually become mature in late summer, and can survive through to late autumn (Lee & Thomas 2002). In cities, *Araneus diadematus* appears to mostly settle in gardens and greenspots, as opposed to roadsides or close to buildings (Van Keer *et al.* 2010).

Study sites

We sampled 63 *A. diadematus* populations across a well-studied network of urban, rural and natural landscapes in northern Belgium, one of the most urbanized and densely populated regions in Europe (Supplementary Figure S1)(United Nations Population Division 2015; see Kaiser *et al.* 2016; Dahirel *et al.* 2017; or Brans *et al.* 2017a for detailed descriptions of this network). Urbanization was studied at two different spatial scales thanks to a 2-step stratified selection design, using the percentage of surfaces occupied by buildings as a proxy for urbanization (extracted from the Large-scale Reference Database, a reference map of Flanders; https://www.agiv.be/international/en/products/grb-en). First, 21 non-overlapping plots (3 × 3 km, hereafter "landscape scale") were selected, sorted into three urbanization levels (7 plots by level). High-urbanization landscapes had more than 10% of their area covered by buildings (to the exclusion of roads and parking lots). Low-urbanization landscapes had less than 3% of their surfaces occupied by buildings and more than 20% by so-called "ecologically valuable areas" (areas with rare, vulnerable or highly diverse vegetation; based on the Flanders Biological Valuation Map; Vriens *et al.* 2011). Finally,

bioRxiv preprint doi: https://doi.org/10.1101/214924; this version posted November 7, 2017. The copyright holder for this preprint (which was not certified by peer review) is the author/funder, who has granted bioRxiv a license to display the preprint in perpetuity. It is made available under aCC-BY-NC 4.0 International license.

"intermediate" landscapes had between 5 and 10% of their surface covered by buildings. We then chose within each landscape 3 sites (200 × 200 m, hereafter the "local scale"), one per urbanization level, this time based on building area only. Compared to low-urbanization sites, highly urbanized sites had higher human population density, as well as lower prey biomass availability due to on average smaller preys (at both landscape and local scales; Dahirel *et al.* 2017), and higher average temperature, mostly at local scales (Kaiser *et al.* 2016).

Spider collection and phenotypic measurements

Populations were sampled from 25 August to 5 October 2014, i.e. during the first part of the reproductive period (Lee & Thomas 2002). One landscape (3 sites) was visited per day; there was no significant link between landscape-level urbanization and sampling date (ANOVA; N = 21 landscapes, $F_{2,18} = 0.009$, $p = 0.991$). In each visited site, between 7 and 11 adult females per population (N_{total} = 621, average ± SD : 9.86 ± 0.74) were sampled on their webs and stored in 70% ethanol; spiders' cephalothorax width was measured under binocular microscope and used as a proxy for body size (Bonte *et al.* 2008). Out of these 621 spiders, 193 individuals caught in the 9 landscapes of the Ghent region were also dissected and the number of mature eggs recorded. Population density data (number of spiders observed per 200 × 200 m site in 4.5 person-hours) were additionally available in the 62 sites (out of 63) sampled in the community-level study by Dahirel *et al.* (2017).

Based on measurements taken in the field (vertical and horizontal diameters of whole web and free central zone, number of sticky silk spirals in each web quadrant), we estimated three design parameters for the webs belonging to sampled spiders: the total length of the sticky capture spiral as a measure of silk investment (capture thread length, or CTL; following Venner *et al.* 2001), the web capture area surface (considering orb webs as ellipses, following

bioRxiv preprint doi: https://doi.org/10.1101/214924; this version posted November 7, 2017. The copyright holder for this preprint (which was not certified by peer review) is the author/funder, who has granted bioRxiv a license to display the preprint in perpetuity. It is made available under aCC-BY-NC 4.0 International license.

Herberstein & Tso 2000), and the mesh width (interval between sticky spirals, averaged over the horizontal and vertical axes). Mesh width can be used as an index of web-building strategy: for a given amount of silk, higher than average mesh widths should indicate spiders that choose to build relatively larger, but "looser" webs, while lower values indicate spiders that create smaller, but "denser" webs (Sherman 1994; Eberhard 2013). This is confirmed by our data, as capture area surface is almost perfectly predicted by the combination of CTL, mesh width and their interaction (linear model, $R^2 = 0.998$, $N = 621$).

Statistical analysis

All analyses were carried out using R, version 3.4 (R Core Team 2016).

The number of adult spiders per site was analysed using a Poisson generalized linear model. Spider numbers were modelled as a function of local and landscape level of urbanization, as well as sampling date; we additionally used distance-based Moran Eigenvector Maps (dbMEMs; Borcard, Gillet & Legendre 2011; Legendre & Legendre 2012) to account for spatial autocorrelation between sites.

To disentangle the indirect (through size changes) and direct effects of urbanization on web-building behaviour, we used piecewise Structural Equation Modelling (also known as path analysis), a type of models in which multiple predictors and response variables are united in a path diagram, with paths reflecting hypothesized causal relationships (Shipley 2009; Grace *et al.* 2012; Lefcheck 2016). Piecewise SEMs are built by translating the chosen path diagram into a set of (generalized) linear models, which can then be fitted individually using standard methods.

bioRxiv preprint doi: https://doi.org/10.1101/214924; this version posted November 7, 2017. The copyright holder for this preprint (which was not certified by peer review) is the author/funder, who has granted bioRxiv a license to display the preprint in perpetuity. It is made available under aCC-BY-NC 4.0 International license.

We compared four candidate path diagrams (Fig. 1a). A first "null" model contained no effect of urbanization and was the "skeleton" upon which the three others were built: it simply assumed that body size (approximated by cephalothorax width) could influence both CTL (Bonte *et al.* 2008) and mesh width (Gregorič *et al.* 2015). These traits could also be influenced by sampling date. Web surface was then explained by CTL, mesh width and their interaction.

Building from this starting model, we assumed (i) that urbanization level (both at local and landscape levels) could influence only body size, with shifts in web traits only being observed as a consequence of body size changes (the "indirect" model), (ii) that urbanization had no effect on size, but had a direct effect on mesh width and CTL, which then determined web surface (the "direct" model), or (iii) that both types of effects were present, and jointly shaped orb-web building (the "full" model). Each SEM was composed of four linear submodels used to model respectively body size, mesh width (web-building strategy), CTL (web investment) and web surface. In the first three submodels, we used distance-based Moran Eigenvector Maps to account for residual spatial autocorrelation among spiders, both within and between landscapes. There was no evidence of residual autocorrelation after the inclusion of dbMEMs (95% confidence intervals of spline correlograms overlapped with 0 at all distances and for all traits).

To assess the goodness of fit of each SEM, we used Shipley's d-sep test (Shipley 2000). To summarize, a p value > 0.05 associated with the Fisher's C test statistic indicates that, *given the set of variables*, there are no missing paths that could significantly increase the explanatory power of the model if added. Fisher's C can also be used to calculate AIC-like information criteria to compare competing SEMs (Shipley 2013). Continuous variables were scaled and centred; SEMs were fitted, evaluated and compared using the R package piecewiseSEM (Lefcheck 2016).

bioRxiv preprint doi: https://doi.org/10.1101/214924; this version posted November 7, 2017. The copyright holder for this preprint (which was not certified by peer review) is the author/funder, who has granted bioRxiv a license to display the preprint in perpetuity. It is made available under aCC-BY-NC 4.0 International license.

For comparison with direct effects parameter values, indirect effects of urbanization on web traits were obtained by multiplying relevant model coefficients across the causal network. 95 % confidence intervals around these effects were obtained by resampling estimated parameter distributions 10000 times.

Then, we used a generalized linear model to analyse the effect of urbanization (local- and landscape-scale), body size, sampling date, web traits and web traits × urbanization interactions on spider egg load. As in previous models, we used dbMEMs to account for spatial autocorrelation. We used a negative binomial GLM, instead of a Poisson GLM, due to evidence of overdispersion (dispersion test on the Poisson GLM, dispersion = 3.04, $Z = 5.82$, $p = 2.89 \times 10^{-9}$). Similarly to above, we multiplied relevant coefficients from this fecundity model and from the path model to evaluate the direct and indirect effects of urbanization on egg counts.

bioRxiv preprint doi: https://doi.org/10.1101/214924; this version posted November 7, 2017. The copyright holder for this preprint (which was not certified by peer review) is the author/funder, who has granted bioRxiv a license to display the preprint in perpetuity. It is made available under aCC-BY-NC 4.0 International license.

Results

Spider population density

The number of spiders found per site was not significantly influenced by urbanization at either spatial scale (local scale: $X^2 = 1.14$, df = 2, $p = 0.57$; landscape scale: $X^2 = 3.07$, df = 2, $p = 0.22$), or by spatial structure ($X^2 = 5.2563$, df = 12, $p = 0.95$). There was also no temporal trend in spider abundance ($X^2 = 0.20$, df = 1, $p = 0.66$). There were on average 16.85 ± 3.16 (SD) adult female *Araneus diadematus* found per 4ha site.

Path analysis of web traits shifts

Based on Fisher's *C* and AIC values, the best of the four candidate path models is the most complex, i.e. the model in which urbanization is assumed to affect spider web-building behaviour both directly and through its effects on body size (Table 1, Fig 1b).

Body size, as measured by cephalothorax width, was significantly influenced by the local level of urbanization (ANOVA, $F_{2,603} = 18.16$, $p = 2.20 \times 10^{-8}$), with spiders being smaller in highly urbanized sites compared to more natural and intermediate populations (by 0.31 ± 0.07 mm, Tukey HSD tests, $p < 1.12 \times 10^{-5}$, Fig 2); there was no clear effect of landscape-scale urbanization ($F_{2,603} = 5.71$, $p = 0.036$; but $p > 0.05$ for all pairwise Tukey tests). Spiders were larger at later sampling dates ($\beta \pm SE = 0.24 \pm 0.11$, $F_{1,603} = 4.17$, $p = 0.028$), and the use of dbMEMs revealed significant spatial autocorrelation in spider body size ($F_{12,603} = 52.38$, $p = 0.028$).

Mesh width significantly increased with body size ($\beta \pm SE = 0.30 \pm 0.04$, $F_{1,602} = 47.95$, $p = 8.28 \times 10^{-15}$). Independently of size, spiders built webs with smaller mesh width in highly urbanized populations compared to low urbanization sites (direct effect: $F_{2,602} = 7.57$, $p = 6.98 \times 10^{-3}$, Tukey HSD test, $p = 7.57 \times 10^{-3}$, Fig 2). Analysis of SEM path coefficients showed

bioRxiv preprint doi: https://doi.org/10.1101/214924; this version posted November 7, 2017. The copyright holder for this preprint (which was not certified by peer review) is the author/funder, who has granted bioRxiv a license to display the preprint in perpetuity. It is made available under aCC-BY-NC 4.0 International license.

that the indirect effect of local scale urbanization on mesh width, through body size shifts, was also negative and equal to 49.30 % of the direct effect (this is derived from the predicted difference between low and high local urbanization populations due to size shifts ± *SE* : -0.10 ± 0.02 mm, compared to -0.21 ± 0.07 mm for the direct effect of high urbanization, Fig 2). No such effect was present at the landscape scale ($F_{2,602}$ = 1.30, p = 0.42). There was significant spatial autocorrelation in web mesh widths ($F_{12,602}$ = 44.77, $p = 8.01 \times 10^{-8}$), but no effect of sampling date ($F_{1,602}$ = 0.86, p = 0.29).

Capture Thread Length was also positively correlated with body size ($\beta \pm SE = 0.20 \pm 0.04$, $F_{1,602}$ = 21.02, $p = 9.31 \times 10^{-8}$) and sampling date ($\beta \pm SE = 0.29 \pm 0.10$, $F_{1,602}$ = 6.00, $p = 4.01 \times 10^{-3}$). Size being equal, CTL was significantly influenced by urbanization at the landscape scale ($F_{2,602}$ = 29.04, $p = 3.28 \times 10^{-9}$). Spiders invested less in webs in intermediate and highly urbanized populations than in low-urbanization sites (Tukey HSD tests, $p = 1.20 \times 10^{-5}$, Fig 2). Analysis of SEM path coefficients showed that the indirect effect of landscape-scale urbanization on CTL, through body size shifts, was either close to zero or very slightly positive, depending on the urbanization intensity (predicted difference between low and moderate/high landscape-scale urbanization sites due to size shifts: +10.16 ± 20.29 and +43.50 ± 21.56 cm, compared to +579.54 ± 91.41 and +423.33 ± 92.16 cm for the direct effect of urbanization, Fig 2). By contrast, local scale urbanization had no direct effect on CTL ($F_{2,602}$ = 3.98, p = 0.06); it had, however, an indirect negative effect through size reduction (difference between low and high urbanization sites: -69.84 ± 19.92 cm, Fig 2). CTL values were spatially correlated ($F_{12,602}$ = 70.23, $p = 2.86 \times 10^{-14}$).

Web surface was near perfectly predicted by CTL, mesh and their interaction; as such, its response to urbanization was similar to the response of these two traits. Web surface decreased with increasing urbanization at the local scale (Fig 2); this decrease was both due to indirect and direct responses, with the latter being more important (average differences

bioRxiv preprint doi: https://doi.org/10.1101/214924; this version posted November 7, 2017. The copyright holder for this preprint (which was not certified by peer review) is the author/funder, who has granted bioRxiv a license to display the preprint in perpetuity. It is made available under aCC-BY-NC 4.0 International license.

between low and high urbanization: -38.85 ± 9.44 and -72.47 ± 23.15 cm², respectively). It increased with landscape-scale urbanization (Fig 2); as for CTL, this was mostly due to direct responses (+130.93 ± 35.12 cm² going from low to high-urbanization sites, compared to +15.32 ± 9.88 cm² for the size-mediated indirect effect).

Spider egg load

The number of eggs per spider was positively correlated with body size (β = 0.03 ± 0.01, Wald X^2 = 7.74, df = 1, p = 5.39 × 10^{-3}) and was not influenced by web traits, or by their interactions with urbanization (all p values > 0.17). Urbanization influenced fecundity at the local scale (X^2 = 90.08, df = 2, p < 2.2 × 10^{-16}), but not at the landscape scale (X^2 = 3.03, df = 2, p = 0.22). Size being equal, egg load decreased as the local level of urbanization increased (Tukey HSD tests, p < 4.29 × 10^{-3}, Fig 2). This direct effect of urbanization is predicted to lead to high-urbanization spiders having 54.26 ± 5.22 fewer eggs, on average, than their low-urbanization conspecifics. We can use results from the piecewise path model to compare this decrease to the one predicted to occur indirectly due to the negative effect of local urbanization on body size, which is estimated to –5.23 ± 1.82 eggs. Egg load increased significantly with sampling date (β = 0.08 ± 0.04, X^2 = 4.89, df = 1, p = 0.03); there was no clear effect of spatial structure (X^2 = 10.87, df = 5, p = 0.054).

bioRxiv preprint doi: https://doi.org/10.1101/214924; this version posted November 7, 2017. The copyright holder for this preprint (which was not certified by peer review) is the author/funder, who has granted bioRxiv a license to display the preprint in perpetuity. It is made available under aCC-BY-NC 4.0 International license.

Discussion

Using a standardized sampling design, we found that the abundance of *Araneus diadematus* was independent of the level of urbanization at two spatial scales. This replicates, over a larger spatial extent, previous results obtained in other "winning" urban spiders, i.e. in species abundant in urban settings (Trubl *et al.* 2012; Lowe, Wilder & Hochuli 2017). The fact that *A. diadematus* is able to maintain consistent population densities across broad gradients of urbanization, when many species in the same spider communities cannot (Dahirel *et al.* 2017), hints at the existence of adaptations to one or several environmental changes associated with urbanization.

Araneus diadematus experienced size reduction in response to local urbanization only. In addition to smaller sizes observed early at the season, a likely consequence of shorter development times (Mayntz, Toft & Vollrath 2003), the Urban Heat Island effect is a possible cause for the observed size reduction in highly urbanized sites. The temperature-size rule, found in many arthropods, indeed predicts that, due to the temperature-dependence of metabolic rates and costs, individuals are smaller at higher temperatures (Atkinson 1994; Horne *et al.* 2015). Supporting here the hypothesis of a temperature-driven size reduction (by contrast with e.g. Entling *et al.* 2010; Lowe, Wilder & Hochuli 2014), is the fact that the urban heat island effect, like size differences, is only detectable when one considers urbanization at the local scale in the study region (Kaiser *et al.* 2016). However, resource availability during development can also strongly influence adult size in spiders (Mayntz *et al.* 2003; Kralj-Fišer *et al.* 2014). Higher prey abundance in urbanised spots of the Sydney area was indeed associated with increased body size in the spider *Nephila plumipes* (Lowe *et al.* 2014; Lowe, Wilder & Hochuli 2016). In the studied region, on the contrary, prey size and prey biomass availability decreased with urbanization, but at both spatial scales, and not simply in response to local urbanization (Dahirel *et al.* 2017). This scale discrepancy may be

bioRxiv preprint doi: https://doi.org/10.1101/214924; this version posted November 7, 2017. The copyright holder for this preprint (which was not certified by peer review) is the author/funder, who has granted bioRxiv a license to display the preprint in perpetuity. It is made available under aCC-BY-NC 4.0 International license.

explained by both mechanisms playing a role, their effects cumulating at the local scale. Alternatively, resource loss is the main mechanism driving size-reduction with urbanization, which is only observed at the local scale because spiders are able to alter their web-building behaviour to compensate for prey biomass loss at the landscape, but not at the local scale. The fact that egg load only decreased in response to local-scale, but not landscape-level urbanization, lends credence to this compensation hypothesis.

Depending on the scale considered, spiders either built webs with smaller mesh width or increased their silk investment in response to urbanization. Webs with smaller mesh are considered better at stopping and retaining prey (Blackledge & Zevenbergen 2006), including large, potentially life-saving prey (Venner & Casas 2005), at the cost of a smaller web surface and therefore fewer prey intercepted. When mesh width is held constant, as it is in response to landscape-level urbanization, increased silk investment/ CTL leads to an increase in web surface (Figs 1, 2) and therefore an increase in the number of prey caught (Prokop & Grygláková 2005; Venner & Casas 2005). Given the reduction in prey size and biomass with urbanization at both scales (Dahirel *et al.* 2017), both types of changes can be seen as adaptive responses to urbanization, which potentially contribute to the persistence of *Araneus diadematus* across urbanization gradients. Our path analysis approach indicates that both direct and size-dependent effects influence these web changes along urbanization gradients at both spatial scales. Web-building in orb-weaving spiders has previously been shown to be both size-constrained (Bonte *et al.* 2008; Gregorič *et al.* 2015), but also highly variable depending on the environment (Herberstein & Tso 2011); the net effect in the case of environmental changes influencing body size was so far unknown. Our results show that the effects of size constraints on web-building are of limited importance compared to direct responses to urbanization. At the landscape scale, size does not appear to substantially limit the possibilities of spiders to alter their web-building behaviour in response to urbanization

bioRxiv preprint doi: https://doi.org/10.1101/214924; this version posted November 7, 2017. The copyright holder for this preprint (which was not certified by peer review) is the author/funder, who has granted bioRxiv a license to display the preprint in perpetuity. It is made available under aCC-BY-NC 4.0 International license.

(Figs. 1 and 2). At the local scale, shifts in mesh due to urban size reduction were limited compared to direct responses (at most ~50% of direct responses and ~a third of the total response, Figs 1 and 2) and were in the same direction (smaller mesh width). On the other hand, CTL did not respond directly to local urbanization, meaning that only size-dependent decreases had an influence at this scale (Figs 1, 2); reductions in web surface with local urbanization were therefore stronger than expected simply based on mesh width reduction and the mesh width/web surface trade-off.

Changes in web-building behaviour in relation to urbanization may both originate from plasticity and/or evolutionary changes (Herberstein & Tso 2011). Disentangling the relative contribution of both is however difficult in observational studies (Merilä & Hendry 2014). We here take advantage of our two-spatial scales design, and the fact that plasticity and genetic adaptation are generally expected to appear in response to finer-grained and coarser-grained environmental variation, respectively (Richardson *et al.* 2014), to emit hypotheses on the relative contributions of these two mechanisms. Mesh width varies with urbanization at the local but not at the landscape scale, which would indicate a more important role of plastic responses. By contrast, CTL only increased significantly in response to landscape-scale urbanization. This is despite prey characteristics responding similarly to urbanization at both the local and landscape scales (Dahirel *et al.* 2017). Temperature can also have a positive effect on silk production (Vollrath *et al.* 1997). However, the urban heat island effect is more important at the local, rather than landscape scale in our study region (Kaiser *et al.* 2016), and is moreover too weak (about 1-2°C) to explain the observed increase in CTL (as even a 12°C increase results in smaller CTL increases than those we observed; Vollrath *et al.* 1997). Thus, while other drivers may have been overlooked, the absence of local responses suggests a predominance of genetic adaptation in silk production changes in response to urbanization.

bioRxiv preprint doi: https://doi.org/10.1101/214924; this version posted November 7, 2017. The copyright holder for this preprint (which was not certified by peer review) is the author/funder, who has granted bioRxiv a license to display the preprint in perpetuity. It is made available under aCC-BY-NC 4.0 International license.

Costs associated with urban life were especially prominent at the local scale. Indeed, at this scale, web capture surfaces were smaller than expected based on mesh/surface trade-offs, due to size constraints, and lower fecundity was observed despite stable population densities (Fig. 2). Food limitation has strong negative impacts on spider lifetime fecundity even in the absence of survival costs (Kleinteich, Wilder & Schneider 2015); the lower fecundities observed in locally urbanized sites may indicate that spiders were, at this scale, unable to fully compensate for reduced prey biomass despite shifts in web-building, and smaller size leading to reduced requirements. From a more applied perspective, these results confirm the oft-stated importance of maintaining local greenspots in highly urbanized landscapes (e.g. Philpott *et al.* 2013), as even generalist "winning" species such as *A. diadematus* may benefit from them. Spiders were comparatively much better at dealing with landscape-scale urbanization; indeed, both fecundity and population densities remained unaffected by urbanization at this scale. This may indicate that traits that successfully varied at this scale (namely CTL and by extension web surface) are more important to prey capture success than the others (mesh width). Conversely, costs associated with increased silk production may be detectable in other life-history dimensions than the ones we explored in the present study (e.g. survival). Comparisons among "winning species" that differ in their silk production strategy (e.g. *A. diadematus*, which destroys and recreates webs regularly, versus *Nephila plumipes*, which build semi-permanent webs, Lowe *et al.* 2014), may help shed further light on the costs/ benefits balance of adaptation to urban life.

Authors' contributions

DB conceived the study and designed methodology; MDC collected the data; MD and MDC analysed the data; MD led the writing of the manuscript. All authors contributed critically to the draft and gave final approval for publication.

bioRxiv preprint doi: https://doi.org/10.1101/214924; this version posted November 7, 2017. The copyright holder for this preprint (which was not certified by peer review) is the author/funder, who has granted bioRxiv a license to display the preprint in perpetuity. It is made available under aCC-BY-NC 4.0 International license.

Acknowledgments

We are grateful to Pieter Vantieghiem and Jasper Dierick for their assistance during field sampling, and to Jonathan Lefcheck for his advice on *piecewiseSEM*. Hans Matheve performed GIS calculations and site selection. This article is part of the Belspo-funded IAP project P7/04 SPEEDY (SPatial and environmental determinants of Eco-Evolutionary DYnamics: anthropogenic environments as a model). MD is funded by a postdoctoral grant from the Fyssen Foundation.

Data accessibility

Data will be made available on Dryad upon final article acceptance.

References

Alberti, M. (2015) Eco-evolutionary dynamics in an urbanizing planet. *Trends in Ecology & Evolution*, **30**, 114–126.

Alberti, M., Correa, C., Marzluff, J.M., Hendry, A.P., Palkovacs, E.P., Gotanda, K.M., Hunt, V.M., Apgar, T.M. & Zhou, Y. (2017a) Global urban signatures of phenotypic change in animal and plant populations. *Proceedings of the National Academy of Sciences*, 201606034.

Alberti, M., Marzluff, J. & Hunt, V.M. (2017b) Urban driven phenotypic changes: empirical observations and theoretical implications for eco-evolutionary feedback. *Philosophical Transactions of the Royal Society B: Biological Sciences*, **372**, 20160029.

Atkinson, D. (1994) Temperature and organism size—a biological law for ectotherms? *Advances in Ecological Research*, **25**, 1–58.

bioRxiv preprint doi: https://doi.org/10.1101/214924; this version posted November 7, 2017. The copyright holder for this preprint (which was not certified by peer review) is the author/funder, who has granted bioRxiv a license to display the preprint in perpetuity. It is made available under aCC-BY-NC 4.0 International license.

Blackledge, T.A. & Zevenbergen, J.M. (2006) Mesh width influences prey retention in spider orb webs. *Ethology*, **112**, 1194–1201.

Bonte, D., Lanckacker, K., Wiersma, E. & Lens, L. (2008) Web building flexibility of an orb-web spider in a heterogeneous agricultural landscape. *Ecography*, **31**, 646–653.

Bonte, D., Van Dyck, H., Bullock, J.M., Coulon, A., Delgado, M., Gibbs, M., Lehouck, V., Matthysen, E., Mustin, K., Saastamoinen, M., Schtickzelle, N., Stevens, V.M., Vandewoestijne, S., Baguette, M., Barton, K., Benton, T.G., Chaput-Bardy, A., Clobert, J., Dytham, C., Hovestadt, T., Meier, C.M., Palmer, S.C.F., Turlure, C. & Travis, J.M.J. (2012) Costs of dispersal. *Biological Reviews*, **87**, 290–312.

Borcard, D., Gillet, F. & Legendre, P. (2011) *Numerical Ecology with R*. Springer-Verlag New York Inc., New York, USA.

Brans, K.I., Govaert, L., Engelen, J.M.T., Gianuca, A.T., Souffreau, C. & Meester, L.D. (2017a) Eco-evolutionary dynamics in urbanized landscapes: evolution, species sorting and the change in zooplankton body size along urbanization gradients. *Philosophical Transactions of the Royal Society of London B*, **372**, 20160030.

Brans, K.I., Jansen, M., Vanoverbeke, J., Tüzün, N., Stoks, R. & De Meester, L. (2017b) The heat is on: Genetic adaptation to urbanization mediated by thermal tolerance and body size. *Global Change Biology*, n/a-n/a.

Breed, A.L., Levine, V.D., Peakall, D.B. & Witt, P.N. (1964) The fate of the intact orb web of the spider *Araneus diadematus*. *Behaviour*, **232**, 43–60.

bioRxiv preprint doi: https://doi.org/10.1101/214924; this version posted November 7, 2017. The copyright holder for this preprint (which was not certified by peer review) is the author/funder, who has granted bioRxiv a license to display the preprint in perpetuity. It is made available under aCC-BY-NC 4.0 International license.

Dahirel, M., Dierick, J., De Cock, M. & Bonte, D. (2017) Intraspecific variation shapes community-level behavioral responses to urbanization in spiders. *Ecology*, **98**, 2379–2390.

Debecker, S., Sanmartín-Villar, I., de Guinea-Luengo, M., Cordero-Rivera, A. & Stoks, R. (2016) Integrating the pace-of-life syndrome across species, sexes and individuals: covariation of life history and personality under pesticide exposure. *Journal of Animal Ecology*, **85**, 726–738.

Eberhard, W.G. (2013) The rare large prey hypothesis for orb web evolution: a critique. *Journal of Arachnology*, **41**, 76–80.

Entling, W., Schmidt-Entling, M.H., Bacher, S., Brandl, R. & Nentwig, W. (2010) Body size–climate relationships of European spiders. *Journal of Biogeography*, **37**, 477–485.

Foelix, R. (2010) *Biology of Spiders*, 3rd ed. Oxford University Press, Oxford, UK.

Grace, J.B., Schoolmaster, D.R., Guntenspergen, G.R., Little, A.M., Mitchell, B.R., Miller, K.M. & Schweiger, E.W. (2012) Guidelines for a graph-theoretic implementation of structural equation modeling. *Ecosphere*, **3**, 1–44.

Gregorič, M., Kuntner, M. & Blackledge, T.A. (2015) Does body size predict foraging effort? Patterns of material investment in spider orb webs. *Journal of Zoology*, **296**, 67–78.

Hendry, A.P., Gotanda, K.M. & Svensson, E.I. (2017) Human influences on evolution, and the ecological and societal consequences. *Philosophical Transactions of the Royal Society B: Biological Sciences*, **372**, 20160028.

bioRxiv preprint doi: https://doi.org/10.1101/214924; this version posted November 7, 2017. The copyright holder for this preprint (which was not certified by peer review) is the author/funder, who has granted bioRxiv a license to display the preprint in perpetuity. It is made available under aCC-BY-NC 4.0 International license.

Herberstein, M.E. & Tso, I.-M. (2000) Evaluation of formulae to estimate the capture area and mesh height of orb webs (Araneoidea, Araneae). *Journal of Arachnology*, **28**, 180–184.

Herberstein, M.E. & Tso, I.-M. (2011) Spider webs: evolution, diversity and plasticity. *Spider Behaviour: Flexibility and Versatility* (ed M.E. Herberstein), pp. 57–98. Cambridge University Press, Cambridge, UK.

Horne, C.R., Hirst, A.G. & Atkinson, D. (2015) Temperature-size responses match latitudinal-size clines in arthropods, revealing critical differences between aquatic and terrestrial species. *Ecology Letters*, **18**, 327–335.

Johnson, M.T.J. & Munshi-South, J. (2017) Evolution of life in urban environments. *Science*, **358**, eaam8327.

Kaiser, A., Merckx, T. & Van Dyck, H. (2016) The Urban Heat Island and its spatial scale dependent impact on survival and development in butterflies of different thermal sensitivity. *Ecology and Evolution*, **6**, 4129–4140.

Kleinteich, A., Wilder, S.M. & Schneider, J.M. (2015) Contributions of juvenile and adult diet to the lifetime reproductive success and lifespan of a spider. *Oikos*, **124**, 130–138.

Kralj-Fišer, S., Čelik, T., Lokovšek, T., Šuen, K., Šiling, R. & Kuntner, M. (2014) Development and growth in synanthropic species: plasticity and constraints. *Naturwissenschaften*, **101**, 565–575.

Lee, P. & Thomas, T. (2002) *Araneus diadematus*. *Provisional atlas of British spiders (Arachnida, Araneae), volumes 1 and 2* (eds P.R. Harvey, D.R. Nellist & M.G. Telfer), p. 225. Biological Recors Centre, Huntingdon, UK.

bioRxiv preprint doi: https://doi.org/10.1101/214924; this version posted November 7, 2017. The copyright holder for this preprint (which was not certified by peer review) is the author/funder, who has granted bioRxiv a license to display the preprint in perpetuity. It is made available under aCC-BY-NC 4.0 International license.

Lefcheck, J.S. (2016) piecewiseSEM: Piecewise structural equation modelling in R for ecology, evolution, and systematics. *Methods in Ecology and Evolution*, **7**, 573–579.

Legendre, P. & Legendre, L.F.J. (2012) *Numerical Ecology*, 3rd ed. Elsevier, Amsterdam, NL.

Lowe, E.C., Wilder, S.M. & Hochuli, D.F. (2014) Urbanisation at multiple scales is associated with larger size and higher fecundity of an orb-weaving spider. *PLoS ONE*, **9**, e105480.

Lowe, E.C., Wilder, S.M. & Hochuli, D.F. (2016) Persistence and survival of the spider *Nephila plumipes* in cities: do increased prey resources drive the success of an urban exploiter? *Urban Ecosystems*, **19**, 705–720.

Lowe, E.C., Wilder, S.M. & Hochuli, D.F. (2017) Life history of an urban-tolerant spider shows resilience to anthropogenic habitat disturbance. *Journal of Urban Ecology*, **3**.

Lowry, H., Lill, A. & Wong, B.B.M. (2013) Behavioural responses of wildlife to urban environments. *Biological Reviews*, **88**, 537–549.

Mayntz, D., Toft, S. & Vollrath, F. (2003) Effects of prey quality and availability on the life history of a trap-building predator. *Oikos*, **101**, 631–638.

McDonnell, M.J. & Hahs, A.K. (2015) Adaptation and adaptedness of organisms to urban environments. *Annual Review of Ecology, Evolution, and Systematics*, **46**, 261–280.

Merilä, J. & Hendry, A.P. (2014) Climate change, adaptation, and phenotypic plasticity: the problem and the evidence. *Evolutionary Applications*, **7**, 1–14.

bioRxiv preprint doi: https://doi.org/10.1101/214924; this version posted November 7, 2017. The copyright holder for this preprint (which was not certified by peer review) is the author/funder, who has granted bioRxiv a license to display the preprint in perpetuity. It is made available under aCC-BY-NC 4.0 International license.

Nentwig, W., Blick, T., Gloor, D., Hänggi, A. & Kropf, C. (2016) Spiders of Europe. URL http://www.araneae.unibe.ch [accessed 17 November 2016]

Oliveira, M.O., Freitas, B.M., Scheper, J. & Kleijn, D. (2016) Size and sex-dependent shrinkage of Dutch bees during one-and-a-half centuries of land-use change. *PLOS ONE*, **11**, e0148983.

Parris, K.M. (2016) *Ecology of Urban Environments*. Wiley-Blackwell, Chichester, UK.

Philpott, S.M., Cotton, J., Bichier, P., Friedrich, R.L., Moorhead, L.C., Uno, S. & Valdez, M. (2013) Local and landscape drivers of arthropod abundance, richness, and trophic composition in urban habitats. *Urban Ecosystems*, **17**, 513–532.

Piano, E., De Wolf, K., Bona, F., Bonte, D., Bowler, D.E., Isaia, M., Lens, L., Merckx, T., Mertens, D., van Kerckvoorde, M., De Meester, L. & Hendrickx, F. (2017) Urbanization drives community shifts towards thermophilic and dispersive species at local and landscape scales. *Global Change Biology*, **23**, 2554–2564.

Prokop, P. & Grygláková, D. (2005) Factors affecting the foraging success of the wasp-like spider *Argiope bruennichi* (Araneae): role of web design. *Biologia*, **60**, 165–169.

R Core Team. (2016) *R: A Language and Environment for Statistical Computing*. R Foundation for Statistical Computing, Vienna, Austria.

Renauld, M., Hutchinson, A., Loeb, G., Poveda, K. & Connelly, H. (2016) Landscape simplification constrains adult size in a native ground-nesting bee. *PLOS ONE*, **11**, e0150946.

bioRxiv preprint doi: https://doi.org/10.1101/214924; this version posted November 7, 2017. The copyright holder for this preprint (which was not certified by peer review) is the author/funder, who has granted bioRxiv a license to display the preprint in perpetuity. It is made available under aCC-BY-NC 4.0 International license.

Richardson, J.L., Urban, M.C., Bolnick, D.I. & Skelly, D.K. (2014) Microgeographic adaptation and the spatial scale of evolution. *Trends in Ecology & Evolution*, **29**, 165–176.

Roberts, M. (1993) *The Spiders of Great Britain and Ireland*. Apollo Books, Stenstrup, Denmark.

Schneider, J.M. & Vollrath, F. (1998) The effect of prey type on the geometry of the capture web of *Araneus diadematus*. *Naturwissenschaften*, **85**, 391–394.

Seto, K.C., Güneralp, B. & Hutyra, L.R. (2012) Global forecasts of urban expansion to 2030 and direct impacts on biodiversity and carbon pools. *Proceedings of the National Academy of Sciences*, **109**, 16083–16088.

Sheridan, J.A. & Bickford, D. (2011) Shrinking body size as an ecological response to climate change. *Nature Climate Change*, **1**, 401–406.

Sherman, P.M. (1994) The orb-web: an energetic and behavioural estimator of a spider's dynamic foraging and reproductive strategies. *Animal Behaviour*, **48**, 19–34.

Shipley, B. (2000) A new inferential test for path models based on directed acyclic graphs. *Structural Equation Modeling: A Multidisciplinary Journal*, **7**, 206–218.

Shipley, B. (2009) Confirmatory path analysis in a generalized multilevel context. *Ecology*, **90**, 363–368.

Shipley, B. (2013) The AIC model selection method applied to path analytic models compared using a d-separation test. *Ecology*, **94**, 560–564.

bioRxiv preprint doi: https://doi.org/10.1101/214924; this version posted November 7, 2017. The copyright holder for this preprint (which was not certified by peer review) is the author/funder, who has granted bioRxiv a license to display the preprint in perpetuity. It is made available under aCC-BY-NC 4.0 International license.

Stevens, V.M., Whitmee, S., Le Galliard, J.-F., Clobert, J., Böhning-Gaese, K., Bonte, D., Brändle, M., Matthias Dehling, D., Hof, C., Trochet, A. & Baguette, M. (2014) A comparative analysis of dispersal syndromes in terrestrial and semi-terrestrial animals. *Ecology Letters*, **17**, 1039–1052.

Trubl, P., Gburek, T., Miles, L. & Johnson, J.C. (2012) Black widow spiders in an urban desert: Population variation in an arthropod pest across metropolitan Phoenix, AZ. *Urban Ecosystems*, **15**, 599–609.

United Nations Population Division. (2015) *World Urbanization Prospects: The 2014 Revision.* United Nations, Department of Economic and Social Affairs, New York, USA.

Van Keer, K., Vanuytven, H., De Koninck, H. & Van Keer, J. (2010) More than one third of the Belgian spider fauna (Araneae) found within the city of Antwerp: faunistics and some reflections on urban ecology. *Nieuwsbr. Belg. Arachnol. Ver.*, **25**, 160.

Venner, S. & Casas, J. (2005) Spider webs designed for rare but life-saving catches. *Proceedings of the Royal Society of London B: Biological Sciences*, **272**, 1587–1592.

Venner, S., Thevenard, L., Pasquet, A. & Leborgne, R. (2001) Estimation of the web's capture thread length in orb-weaving spiders: determining the most efficient formula. *Annals of the Entomological Society of America*, **94**, 490–496.

Vollrath, F., Downes, M. & Krackow, S. (1997) Design Variability in Web Geometry of an Orb-Weaving Spider. *Physiology & Behavior*, **62**, 735–743.

Vriens, L., Bosch, H., De Knijf, S., De Saeger, S., Guelinckx, R., Oosterlynck, P., Van Hove, M. & Paelinckx, D. (2011) *De Biologische Waarderingskaart - Biotopen En Hun*

bioRxiv preprint doi: https://doi.org/10.1101/214924; this version posted November 7, 2017. The copyright holder for this preprint (which was not certified by peer review) is the author/funder, who has granted bioRxiv a license to display the preprint in perpetuity. It is made available under aCC-BY-NC 4.0 International license.

Verspreiding in Vlaanderen En Het Brussels Hoofdstedelijk Gewest [En: The Biological Valuation Map - Habitats and Their Distribution in Flanders and the Brussels Capital Region]. Mededelingen van het Instituut voor Natuur- en Bosonderzoek, Brussels, Belgium.

Wong, B.B.M. & Candolin, U. (2015) Behavioral responses to changing environments. *Behavioral Ecology*, **26**, 665–673.

bioRxiv preprint doi: https://doi.org/10.1101/214924; this version posted November 7, 2017. The copyright holder for this preprint (which was not certified by peer review) is the author/funder, who has granted bioRxiv a license to display the preprint in perpetuity. It is made available under aCC-BY-NC 4.0 International license.

TABLES

Table 1. Goodness-fit statistics for the four candidate models explaining web characteristics as a function of urbanization levels.

Model	Fisher's C	df	p	AIC	ΔAIC
Full model	**27.97**	**18**	**0.06**	**155.97**	**0**
Indirect model	69.53	34	<0.001	181.53	25.56
Direct model	97.13	26	<0.001	230.2	74.23
Null model	138.69	42	<0.001	242.69	86.72

bioRxiv preprint doi: https://doi.org/10.1101/214924; this version posted November 7, 2017. The copyright holder for this preprint (which was not certified by peer review) is the author/funder, who has granted bioRxiv a license to display the preprint in perpetuity. It is made available under aCC-BY-NC 4.0 International license.

FIGURE LEGENDS

Figure 1. a/ Conceptual diagrams for the four candidate path models. U: urbanization (both scales); Si: body size; C: CTL; M: Mesh width; CM: CTL × Mesh width interaction; Su: web surface. b/ Detail of the full, best-supported, model. Standardized path coefficients are presented for significant effects after ANOVAs and post-hoc tests (*: $p < 0.05$; **: $p < 0.01$; ***: $p < 0.001$; non-significant paths in grey). Effects of space (dbMEMs) and sampling date on body size, CTL and mesh width are omitted from graphs for clarity, but accounted for in the presented R^2.

Figure 2. Predicted mean *Araneus diadematus* trait values (± 95% confidence intervals) as a function of urbanization intensity at two spatial scales, based on the full piecewise structural equation model. Filled circles refer to values predicted when allowing both direct and indirect effects of urbanization; open circles to values obtained when only body size is allowed to respond to urbanization; dotted lines to the observed average. Predictions at one spatial scale are made by averaging over the effects of urbanization at the other spatial scale, sampling date and spatial structure.

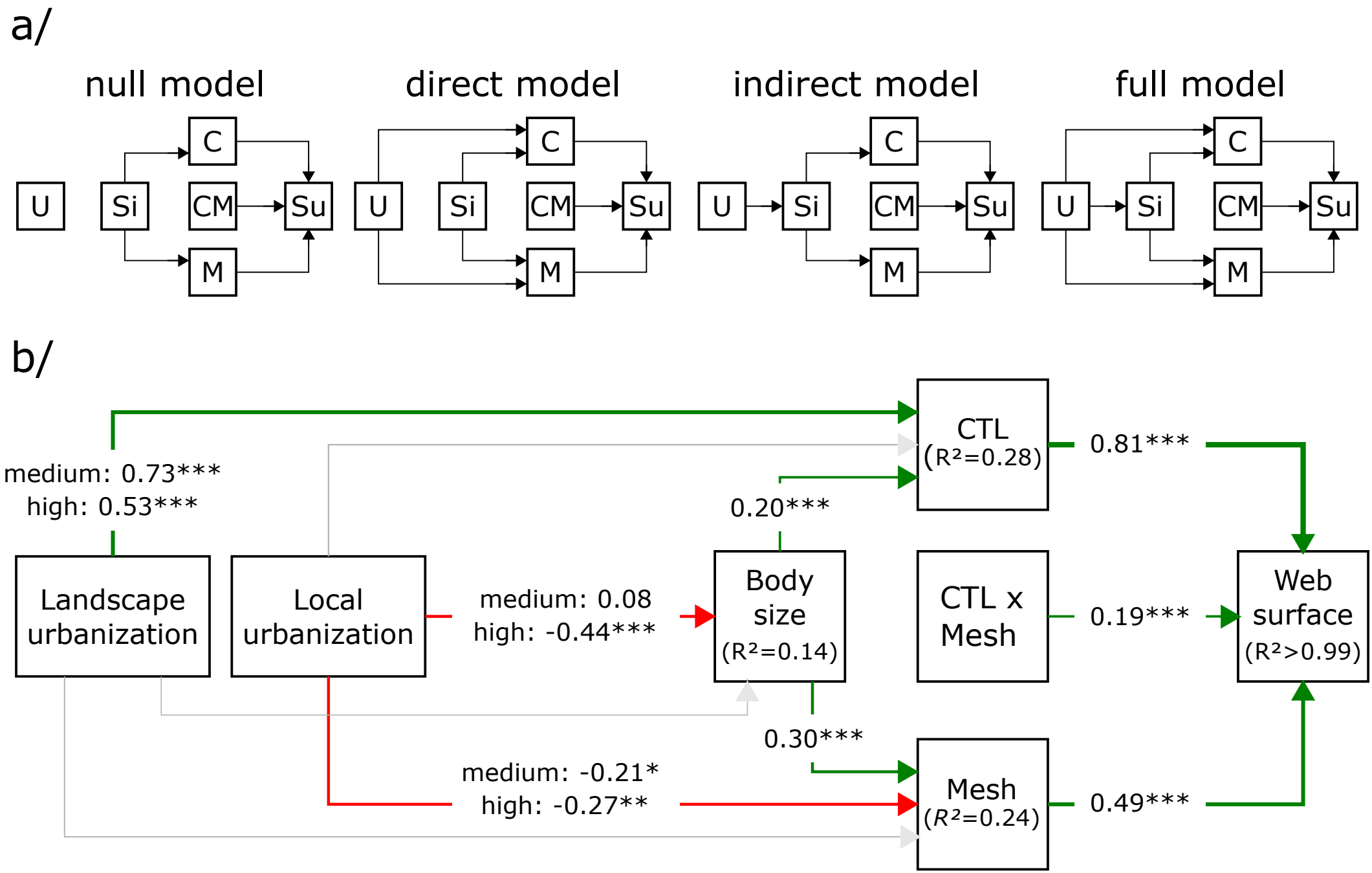
a/
null model
direct model
indirect model
full model
U
Si
C
CM
M
Su
b/
CTL
(R²=0.28)
0.81***
medium: 0.73***
high: 0.53***
0.20***
Landscape urbanization
Local urbanization
medium: 0.08
high: -0.44***
Body size
(R²=0.14)
CTL x Mesh
0.19***
Web surface
(R²>0.99)
0.30***
medium: -0.21*
high: -0.27**
Mesh
(R²=0.24)
0.49***

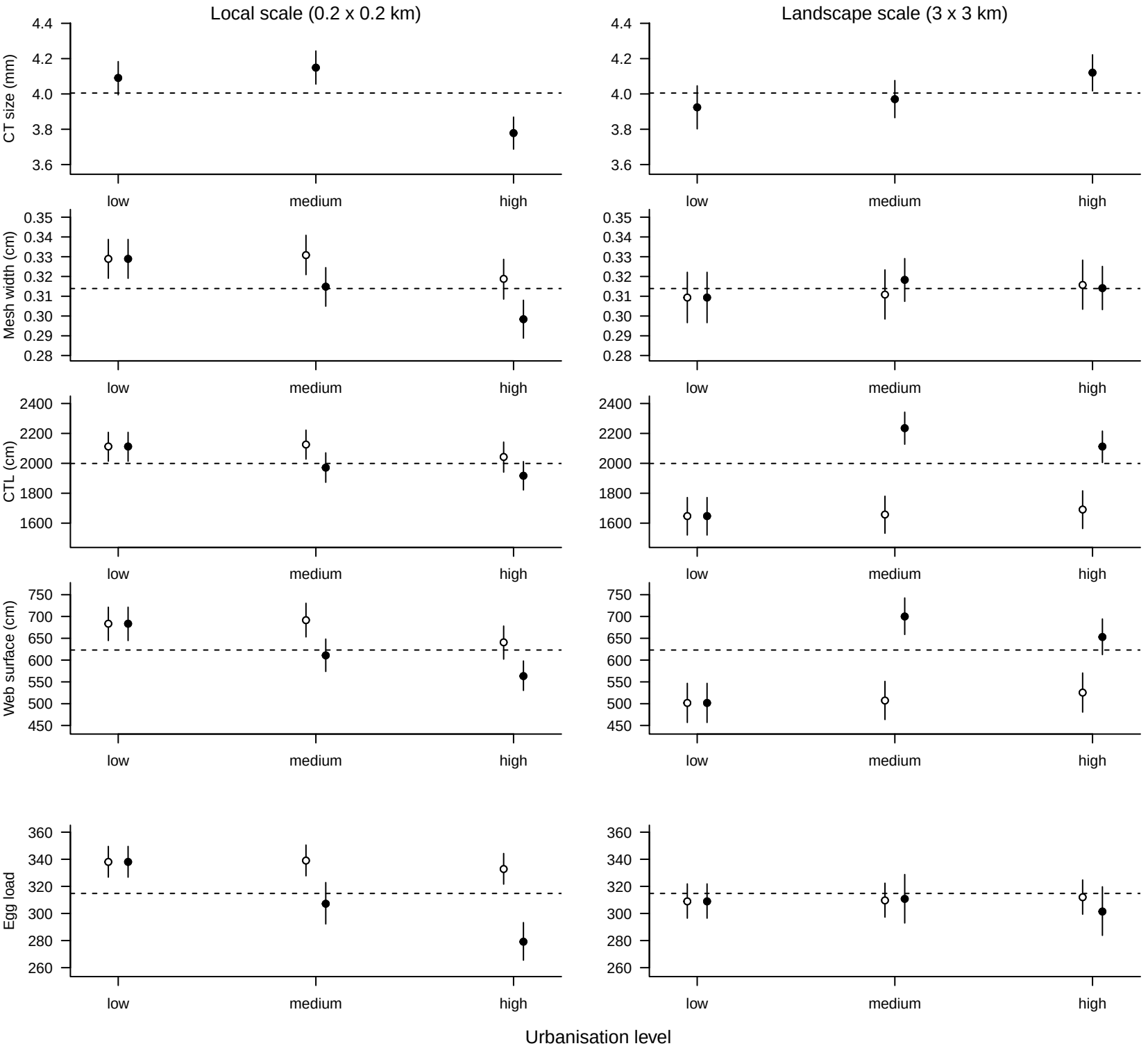
Local scale (0.2 x 0.2 km)
Landscape scale (3 x 3 km)
CT size (mm)
Mesh width (cm)
CTL (cm)
Web surface (cm)
Egg load
low
medium
high
Urbanisation level