bioRxiv preprint doi: https://doi.org/10.1101/225151; this version posted November 25, 2017. The copyright holder for this preprint (which was not certified by peer review) is the author/funder, who has granted bioRxiv a license to display the preprint in perpetuity. It is made available under aCC-BY-ND 4.0 International license.

Proof of concept continuous event logging in living cells

Andrey Shur, Richard M. Murray

Abstract

Biological records are omnipresent in paleontology, history, and climate science. Tree rings and ice cores provide evidence of environmental conditions that have been recorded in the composition of materials that are deposited over time, carrying with them a record of events that have influenced their existence before being buried underneath ice or inside the trunk of a tree. We constructed a proof of concept synthetic circuit that can be used to create a similar chronological record of events in the DNA of a living *E. coli*. In our system, phage-based serine integrases are employed to sequentially integrate pieces of DNA corresponding to which stimulus is being detected. We show that placing attB and attP sites close together on a piece of DNA prevents intramolecular reactions, and enables repeated integration events to expand a genetic locus proportionally to integrase induction and abundance of plasmid DNA. We also show that dCas9 binding can prevent integrase from reacting with an attachment site, and in so doing we can control which piece of DNA is integrated by the induction of different guide RNAs. These results represent significant steps towards an event logger that is capable of recording the ordering and magnitude of any number of molecular events. Such a system may be useful in studying complex biological phenomena such as biofilm formation, quorum sensing, or signaling in the gut.

Introduction

Living cells are capable of detecting and responding to sophisticated stimuli present in their environment. Light [1], heat [2], chemicals, and proteins [3] represent a few of the types of stimuli that cells can distinguish. The ability to detect these stimuli is useful to the cell's survival if the cell can appropriately respond to the stimulus; producing a heat-shock protein in response to heat, for example. A biologist, however, must build sophisticated instruments to measure the same stimuli in order to know the magnitude and chronological order of the events that a cell has lived through. In this work, we describe a system that can create a record of chemical stimuli a cell has seen within that cell's DNA.

Previous work on DNA-based event detectors has focused on using phage integrases to irreversibly "flip" pieces of DNA in response to stimuli [4]–[6]. Phage integrases are extremely useful proteins to employ in this regard because their action to recombine specific DNA sequences is deterministic, fast [7], and irreversible. However, integrase-based event recorders typically have a limited number of attainable DNA states, meaning that only a few events can be recorded before the memory capacity is 'used up'. Previous work using cas9 to stochastically excise memory units (conceptually similar to flipping memory units with integrases) in mouse stem cells [8] has shown that a limited number of memory units can be used to record the order and identity of cellular

bioRxiv preprint doi: https://doi.org/10.1101/225151; this version posted November 25, 2017. The copyright holder for this preprint (which was not certified by peer review) is the author/funder, who has granted bioRxiv a license to display the preprint in perpetuity. It is made available under aCC-BY-ND 4.0 International license.

events over many generations. However, lineage information or cellular events can only be recorded until all memory units have been excised or flipped, a fact which places a fundamental limit on such event recording systems.

The CRISPR system represents a natural chronological record [9] of stimuli where pieces of DNA corresponding to phages are inserted into the genome in the order in which the phages were encountered. Phage genomes are chopped into short oligos, which get inserted into the front of the CRISPR array through the action of the Cas1 and Cas2 proteins. In so doing the CRISPR system keep inserting more phage sequences and making the CRISPR array longer, in contrast with more limited integrase-based memory. More recently encountered phages appear closer to the promoter at the front of the CRISPR array, thus those guides are produced in greater abundance than older guides that reside farther down the array. This allows the cell to focus its immune defenses against more pressing threats, while eventually forgetting the faces of long-vanquished foes.

Several groups have endeavored to harness this recording system to encode the presence of electroporated oligos [10] and chemical stimuli [11] in a “DNA tape recorder” type of circuit that takes advantage of random spacer acquisition during overexpression of cas1-2 proteins. In particular, Sheth et al [11] have developed a very interesting circuit that utilizes an inducible copy number plasmid to convert a chemical stimulus into DNA abundance, which is in turn reflected in the identity of “random” DNA spacers acquired in the CRISPR array. Using this system, Sheth et al can identify the presence/absence and chronological order of three different chemicals over a period of four days.

We designed and built a conceptually similar system that can record the chronological order of stimuli in repeatedly integrated DNA elements, using phage integrases instead of cas1-2. Our event logger consists of three components. A set of “data plasmids” serves as a source of DNA for integration, taking advantage of plasmid replication to maintain a pool of un-integrated DNA. A synthetic genetic network serves as the control system which converts stimulus detection into plasmid integration. An engineered genomic integration site allows for simplified extraction and purification of the integrated fragments for sequencing and read-out.

We believe that our system offers several advantages over that developed by Sheth et al. First, phage integrases are much more efficient and their recognition site is more well-defined than that of cas1-2, which allows our system to react faster than cas1-2 while being less toxic, since phage integrases will not interact with the *E. coli* genome if their cognate attachment site is not present. Second, our system can allow integration of any size of DNA fragment, which can lead to wider applications such as stimulus-directed pathway assembly or programmed integration of promoters and other active genetic elements. We envision these systems being used to produce “molecular sentinels”—bacteria that can be seeded in a river or a waste treatment plant or a gut

bioRxiv preprint doi: https://doi.org/10.1101/225151; this version posted November 25, 2017. The copyright holder for this preprint (which was not certified by peer review) is the author/funder, who has granted bioRxiv a license to display the preprint in perpetuity. It is made available under aCC-BY-ND 4.0 International license.

microbiome to record chemicals or hormones present over time in a much less obtrusive way than using conventional means.

Results

Serine integrases will catalyze a recombination reaction between attP and attB sites, converting these into unreactive attL and attR sites [12]. To allow repeated integration into the same site, a data plasmid must contain both attP and attB sites, to replace the attB site which is destroyed by the recombination. This presents a challenge because intramolecular attachment sites may be recombined with much higher efficiency than intermolecular sites, meaning that data plasmids will be consumed in non-constructive reactions faster than they can be integrated into the genome. We determined that placing parallel attachment sites closer than 100 bp, as measured from the edge of the attB and attP sequences, decreases the rate at which intramolecular recombination occurs at a rate inversely proportional to the distance between the sites (Figure 1). The minimum intramolecular integration rate occurs at 0 bp spacing, resulting in less than 5% of the intramolecular integration activity seen with 100bp spacing.

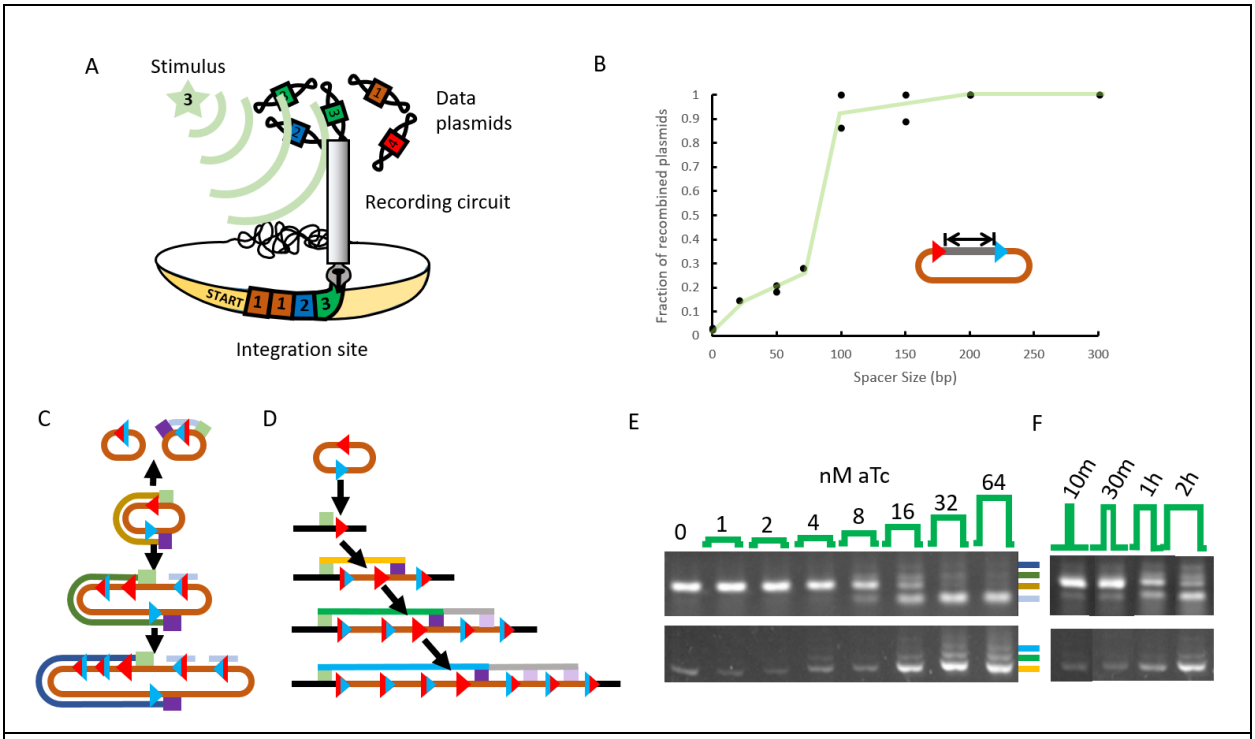

Figure 1: **A**) conceptual representation of the genome event logging circuit. Data plasmids are selected by the recording circuit to be inserted into the integration site, directed by an external stimulus. **B**) Minimal site spacing required for intramolecular integration. Plasmids containing a variable length spacer are incubated with integrase-expressing plasmid in cell-free extract. After incubation for 20 hours, plasmids are purified and transformed into competent cells such that each cell gets one or zero plasmids. Recombined plasmids yield green colonies, while un-recombined plasmids do not express GFP. Colonies were counted

bioRxiv preprint doi: https://doi.org/10.1101/225151; this version posted November 25, 2017. The copyright holder for this preprint (which was not certified by peer review) is the author/funder, who has granted bioRxiv a license to display the preprint in perpetuity. It is made available under aCC-BY-ND 4.0 International license.

and the results are plotted. Green line is purely for visualization. **C**) Possible integrase reactions that affect the data plasmid. Data plasmids can undergo an intramolecular reaction (up arrow) aka deletion, or intermolecular reaction with other data plasmids, aka multimerization. Green and purple squares represent PCR primers used to detect the presence of deleted or multimerized plasmids. Colored lines represent the PCR product that is obtained, with the length increasing from yellow to green to blue. **D**) Data plasmid can integrate into the genome, yielding a repetitive DNA region. Again, PCR primers are designed such that they produce a longer product the more copies of the data plasmid are inserted. Faint violet and grey lines represent copies of the primer sites located further downstream in the genome site. **E**) PCR performed on liquid cultures of bacteria expressing integrase under an inducible promoter. Upon addition of different concentrations of aTc for one hour, data plasmids are recombined to form multimers (top) and the genome site is extended (bottom). Colored lines at the side of the plot indicate which PCR product (depicted in C and D) is seen. **F**) Same as E, but 16 nM of aTc were added for different amounts of time, after which the cells were spun down and resuspended in fresh media without inducer. A similar trend is observed, with more total amount of inducer resulting in more genome integration and more data plasmid multimerization.

Next, we constructed a proof of concept event logger system consisting of a single data plasmid and tetracycline inducible Bxb1 integrase. Upon induction, integrase was able to catalyze genome integration and data plasmid multimerization in vivo, proportional to the strength of the inducer pulse seen by the cells (Figure 1). Only one hour of induction with aTc concentations ranging from 1-64 nM generated different amounts of integration, with 32 and 64 nM resulting in nearly complete integration (intermolecular or genomic) of all data plasmids. We sought to control the population of data plasmids by arranging the integrase attachment sites in a translational fusion with chloramphenicol resistance. Thus, data plasmids inserted into the genome or multimerized would not be producing a functional antibiotic resistance gene, and the cell would be forced to maintain a population of un-recombined data plasmids to allow for recording future stimuli. However, multimerized data plasmids were not seen to decrease in number even after additional culturing of the cells for 12 hours following the application of the inducer pulse (data not shown). In addition, entire plasmids were integrated into the genome with this system, resulting in multiple functional Cole1 replication origins being present in the genome following integrase induction. We were unable to isolate cells containing different numbers of genome integrated plasmids, possibly because these high copy origins were resulting in polyploidy.

We also wanted to allow recording of the chronological order and duration of multiple events. To this end, the integrase must select between identical attachment sites to integrate different data plasmids into the genome. We have previously shown that catalytically inactive CRISPR-Cas9 could be used to bind and prevent Bxb1 integrase from binding to specific attachment sites in cell-free extract [13]. Now we have shown that this system works in live *E. coli* (Figure 2). A plasmid containing two integrase attachment sites can be made to preferentially integrate one or the other, by co-expression of dCas9 and the appropriate guide RNA. This behavior is dependent on dCas9 expression, but a slight leak of pLac-driven guide RNAs results in colonies

bioRxiv preprint doi: https://doi.org/10.1101/225151; this version posted November 25, 2017. The copyright holder for this preprint (which was not certified by peer review) is the author/funder, who has granted bioRxiv a license to display the preprint in perpetuity. It is made available under aCC-BY-ND 4.0 International license.

nominally expressing only dCas9 to appear similar to dCas9 and second (pLac) guide RNAs in this experiment. As a proof of principle that this system is sensitive to induction magnitude, we also tried activating guide RNA and dCas9 production in advance of integrase production, to see if pre-production of guide RNA and dCas9 complexes can affect the magnitude of the attachment site repression effect (Figure 2 C). We found that pre-incubation with inducers can increase the magnitude of site selection by about two fold by pre-incubation for 100 min.

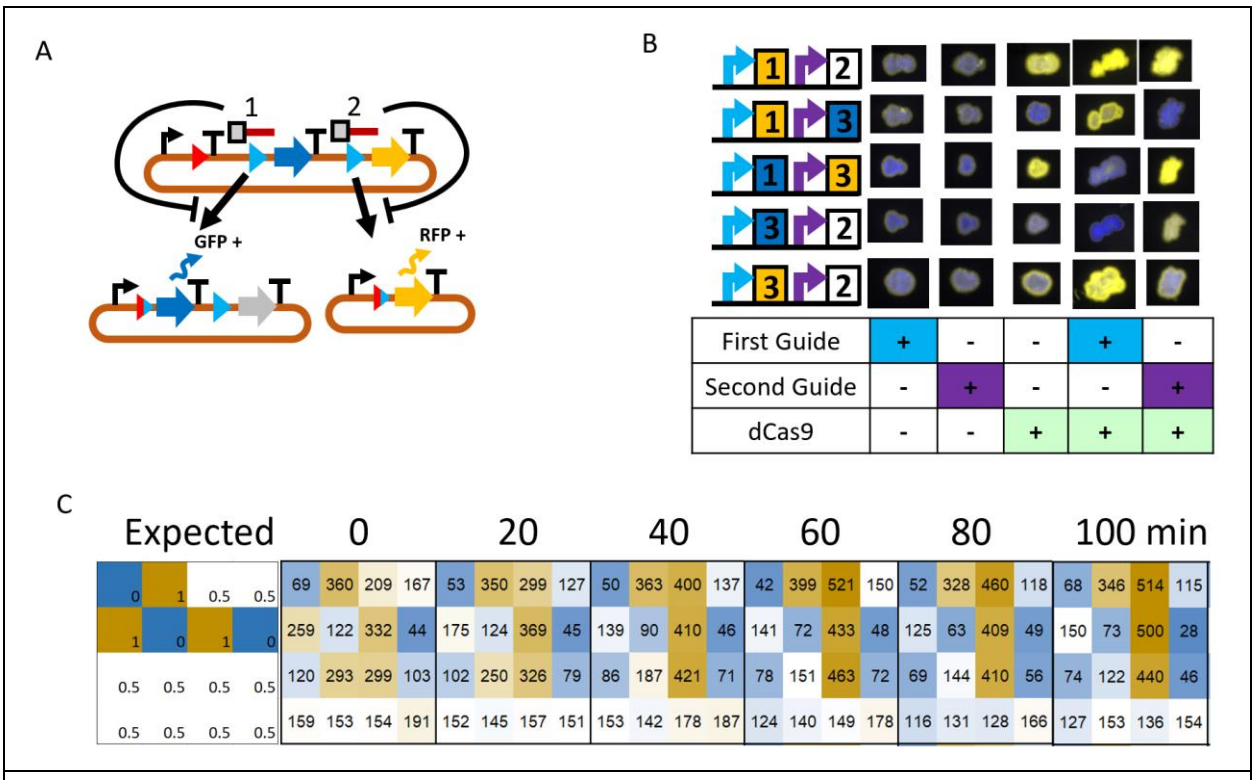

Figure 2: **A**) In vivo integrase attachment site selection reporter construct. Blue triangles are attP sites, the red triangle is an attB site. Bent arrow and T represent promoter and terminator, respectively. In the initial configuration, the promoter is blocked by a terminator from making RNA coding for GFP (blue arrow) or RFP (yellow arrow). Upon integrase-mediated recombination with attB and the first attP, the terminator after the promoter is removed and GFP is expressed. Likewise, if the second attP is chosen, the terminator and GFP sequence are removed, allowing RFP to be produced instead. Guide RNAs, represented by grey boxes with orange tails pointing to the 5' end of the guide RNA (PAM sequence is located approximately where the grey box is), can repress integration at either the first or second site. **B**) Constructs with orthogonal guide RNA sequences under control of inducible promoters were induced in the presence of a reporter construct containing specific guide RNA binding sites. Numbered boxes at the left represent the expected color of the colony if that guide RNA is expressed. For example, the first row has the #1 binding site in front of GFP, such that if guide 1 is expressed, the cells should turn red. Consequently, guide binding site #3 is present in front of RFP in the first row, so when guide #2 is expressed, cells should look the same as when no guide is expressed. **C**) Guide RNA and dCas9 were induced some amount of time before integrase was expressed. Each colored square represents the endpoint fluorescence value of a cell culture containing the test constructs and

bioRxiv preprint doi: https://doi.org/10.1101/225151; this version posted November 25, 2017. The copyright holder for this preprint (which was not certified by peer review) is the author/funder, who has granted bioRxiv a license to display the preprint in perpetuity. It is made available under aCC-BY-ND 4.0 International license.

dcas9/integrase control system. Vertical columns are different constructs, containing different guide RNA sequences or different guide binding sites in the reporter constructs. Horizontal columns have different inducers added; the top row induces the left guide, the second row induces the right guide, the third row induces dcas9 only, and the bottom row has no inducers added. The expected color of each well is represented with the grid at the left. Raw fluorescence values are plotted in the squares, with the color being determined by whether the number falls in the middle or at a minimal or maximal extreme of RFP expression for all wells tested in the experiment. GFP was not measured in this experiment.

We next sought to construct a data plasmid which combined dCas9 attachment site selection and continuous plasmid integration. The main goals of this design were to produce a plasmid which would not result in having high copy plasmid origins integrated into the genome, and which would contain two data plasmids carried on the same piece of DNA. TP901 can be used to excise these minimal data plasmids into minicircles which only contain the Bxb1 attB and attP sites necessary for genome integration. Once the minicircles are excised, the data plasmid must be prevented from replicating, or else the cells would fill up with plasmids that had already excised their minicircles, and no further genome integration could take place.

This is accomplished in two ways. First, the promoter necessary to drive plasmid replication from the Cole1 origin [14] can be placed within one minicircle. This way, when the minicircle is excised, the origin will stop replicating. Second, transcriptional interference from antisense promoters can be used as a way to repress sense promoters [15]. Thus, a second minicircle can be placed after the Cole1 origin, containing a terminator. Once that terminator is excised along with that minicircle, the antisense promoter will also repress plasmid replication (Figure 3 A). In this way we can construct a data plasmid that can give rise to two minicircles, either one of which will result in a plasmid that cannot replicate. This will serve to control the population of plasmids within the cell, maintaining only the plasmids which have not had their minicircles excised. Upon induction of minicircle excision, we see that the population of un-excised plasmids is maintained only in the case where minicircle excision affects plasmid replication ability. More experiments must be done, however, to confirm this effect.

bioRxiv preprint doi: https://doi.org/10.1101/225151; this version posted November 25, 2017. The copyright holder for this preprint (which was not certified by peer review) is the author/funder, who has granted bioRxiv a license to display the preprint in perpetuity. It is made available under aCC-BY-ND 4.0 International license.

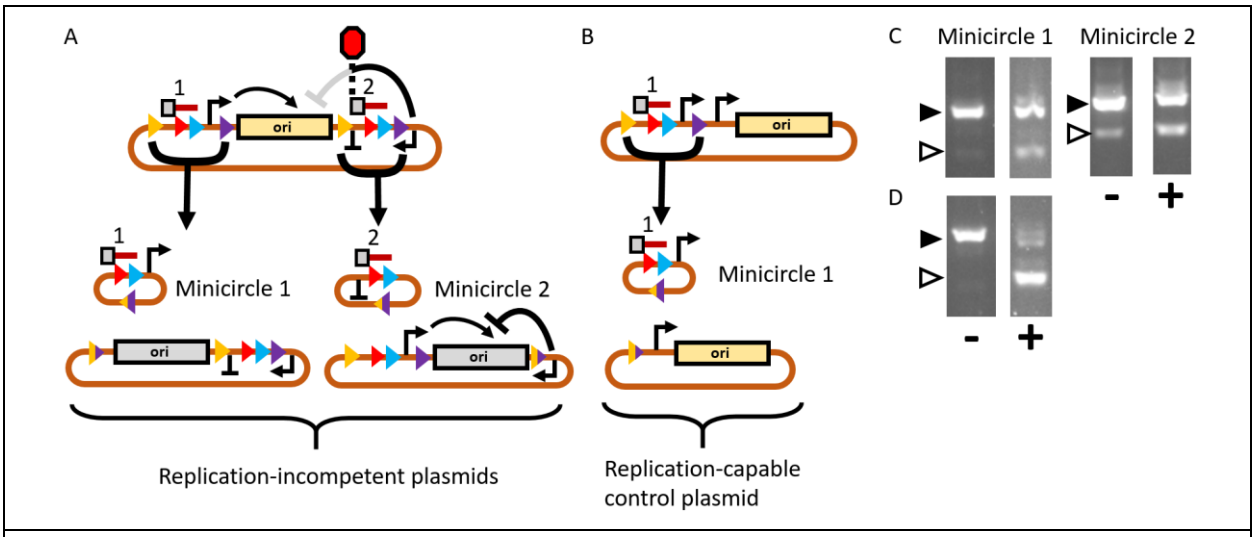

Figure 3. Data plasmid version 2.0. **A**) One plasmid gives rise to two minicircles (Minicircle 1 and Minicircle 2) when exposed to TP901 integrase (attB/P sites denoted by yellow and purple triangles). Each Minicircle contains a different guide RNA binding site, denoted by the grey square with a brown line. Excision of Minicircle 1 results in removing the promoter driving the origin of replication, which leads to a replication-incompetent plasmid. Excision of Minicircle 2 leads to removal of a terminator (indicated by red octagon), which allows an antisense promoter to drive transcription antisense to the origin of replication, which leads to transcriptional interference and repression of replication. **B**) a test plasmid, which contains a second promoter outside of the Minicircle. In this construct, when the Minicircle is created, the resulting plasmid can still replicate. **C**) Minicircle test PCRs, done without (-) and with (+) induction of TP901 integrase. Black arrowhead represents the expected size of an unexcised minicircle, and the white arrowhead represents the expected size of excised minicircle. In this experiment, full data plasmid was used, as depicted in (A). Upon induction of minicircle excision, plasmids with unexcised minicircles are maintained, since only those plasmids can replicate. **D**) TP901 induction experiment, performed on the control plasmid depicted in (B). The control plasmid can replicate after the minicircle is excised, thus plasmids convert to the "excised" version after integrase induction.

Discussion

We have developed a proof of concept system that allows tape recorder-like sequential recording of stimuli in a bacterium's DNA. The basic idea is to allow a bacterium to choose between a set of data plasmids to integrate, depending on the stimuli that are perceived. Integrase attachment sites B and P present on the data plasmids allow continued integration of these plasmids into a single B site in the genome, and selective expression of guide RNAs from chemical sensitive promoters will result in binding and "repression" of attachment site activity, allowing the system to "choose" a data plasmid to insert from a set of possible varieties. In this report we have described a series of steps approaching a complete system capable of genetic recordings, but we are still working to obtain sequences of these repeatedly integrated genome sites. Our goal, of course, is to be able to start with a genome site sequence, and then determine what the sequence of stimuli had to be to obtain such a sequence.

bioRxiv preprint doi: https://doi.org/10.1101/225151; this version posted November 25, 2017. The copyright holder for this preprint (which was not certified by peer review) is the author/funder, who has granted bioRxiv a license to display the preprint in perpetuity. It is made available under aCC-BY-ND 4.0 International license.

Sheth et al [11] have developed a similar system, taking advantage of the random spacer integration afforded by cas1-2 protein overexpression to integrate portions of a “trigger plasmid”, whose copy number is varied by selective induction of Rep protein expression by chemical sensitive stimulus. The Sheth et al method shares many similarities to the method proposed here, but we believe that our method is more inherently flexible and capable of doing more. Since we have decided to utilize serine integrases for our event logger, we can take advantage of the fact that they are capable of integrating large pieces of DNA. There are also many different integrases that have been characterized, with different attachment site specificities to choose from [16]. Thus, our system has greater flexibility in terms of what the final genome array sequence will be. One can imagine a system where entire genes are integrated sequentially, producing a complex operon that is defined by the order of stimuli that a cell has seen. Integrases are known to be quite fast and efficient at recombining DNA, which means we could get away with very low integrase expression, while cas1-2 may have to be driven at expression levels that would stress the cell.

Materials and Methods

Cell strains

Cells used were DH5alpha Z1 from Lutz et al [17]. Genome site constructs were made by Gibson assembly into SpeI-KpnI digested pOSIP KH or pOSIP KO from Pierre et al [18], followed by genome integration and pE-FLP excision protocol as described.

Constructs

Bxb1 integrase sequence was amplified from the Dual-recombinase-controller vector, which was a gift from Drew Endy (Addgene plasmid # 44456) [6]. dCas9 was amplified from pAN-PTet-dCas9, which was a gift from Christopher Voigt (Addgene plasmid # 62244) [19]. Guide RNA sequences were G1: GTTGACcagacaaacccatt, G2: GTTGACcagacaaacctagt, G3: GTTGACcagacaaaccaatg, sgRNA scaffold sequence: GTTTTAGAGCTAGAAATAGCAAGTTAAAATAAGGCTAGTCCGTTATCAACTTGAAAAAGTGGCACCGAGTCGGTGC. Bxb1 attB: GGCTTGTCGACGACGGCGTGCTCCGTCGTCAGGATCAT, Bxb1 attP: GGTTTGTCTGGTCAACCACCGCGTGCTCAGTGGTGTACGGTACAAACC, TP901 attP (mc1): GCGAGTTTTTATTTCGTTTATTCAAATTAAGGTAACTAAAAAACTCCTTT, TP901 attB (mc1): AACACAATTAACATCCAAATCAAGGTAAATGCTTT, TP901 attB(mc2): AACACAATTAACATCTCAATCAAGGTAAATGCTTT, TP901 attP(mc2): GCGAGTTTTTATTTCGTTTATTTCAATTAAGGTAACTAAAAAACTCCTTT. Cole1 origin with no promoter was made by PCR with PCOLE1NOP001_F: AAAGGTCTCAGCTTGCAAACAAAAAAACCACCGCTACC, and PCOLE1NOP002_R: AAAGGTCTCACTCCGCCAGGAACCGTAAAAAGGCC, Promoter in Minicircle 1 was: tttacggctagctcagtcctaggtatagtgctagc, Promoter in front of Minicircle 2 was: ttgacagctagctcagtcctaggtataatactag.

Experiments

Cells were grown to 0.2 OD then inducers were added. 1-64 nM Anhydrotetracycline (Sigma), 0.2 uM Sodium Salicylate (Sigma), 0.2% Arabinose (Teknova), 1 mM Isopropyl-beta-D-thiogalactoside (Sigma).

bioRxiv preprint doi: https://doi.org/10.1101/225151; this version posted November 25, 2017. The copyright holder for this preprint (which was not certified by peer review) is the author/funder, who has granted bioRxiv a license to display the preprint in perpetuity. It is made available under aCC-BY-ND 4.0 International license.

Cells were subsequently grown for varying amounts of time. Then, 10 uL of cells were transferred into another 1 mL of culture and cells were grown for 12 hours again.

References

[1] J. Fernandez-Rodriguez, F. Moser, M. Song, and C. A. Voigt, "Engineering RGB color vision into Escherichia coli," *Nat. Chem. Biol.*, vol. 13, no. 7, pp. 706–708, 2017.

[2] D. I. Piraner, M. H. Abedi, B. A. Moser, A. Lee-Gosselin, and M. G. Shapiro, "Tunable thermal bioswitches for in vivo control of microbial therapeutics," *Nat. Chem. Biol.*, vol. 13, no. 1, pp. 75–80, 2017.

[3] R. Tecon and J. R. Van Der Meer, "Bacterial biosensors for measuring availability of environmental pollutants," *Sensors*, vol. 8, no. 7, pp. 4062–4080, 2008.

[4] J. Bonnet, P. Subsoontorn, and D. Endy, "Rewritable digital data storage in live cells via engineered control of recombination directionality," *Proc. Natl. Acad. Sci.*, vol. 109, no. 23, pp. 8884–8889, 2012.

[5] V. Hsiao, Y. Hori, P. W. K. Rothemund, and R. M. Murray, "A population-based temporal logic gate for timing and recording chemical events," *Mol. Syst. Biol.*, vol. 557, pp. 1–17, 2016.

[6] N. Roquet, A. P. Soleimany, A. C. Ferris, S. Aaronson, and T. K. Lu, "Synthetic recombinase-based state machines in living cells," *Science (80-.).*, vol. 353, no. 6297, p. aad8559-aad8559, 2016.

[7] S. Singh, P. Ghosh, and G. F. Hatfull, "Attachment Site Selection and Identity in Bxb1 Serine Integrase-Mediated Site-Specific Recombination," *PLoS Genet.*, vol. 9, no. 5, 2013.

[8] K. L. Frieda, J. M. Linton, S. Hormoz, J. Choi, K. H. K. Chow, Z. S. Singer, M. W. Budde, M. B. Elowitz, and L. Cai, "Synthetic recording and in situ readout of lineage information in single cells," *Nature*, vol. 541, no. 7635, pp. 107–111, 2017.

[9] J. a. Doudna and E. Charpentier, "The new frontier of genome engineering with CRISPR-Cas9," *Science (80-.).*, vol. 346, no. 6213, pp. 1258096–1258096, Nov. 2014.

[10] S. L. Shipman, J. Nivala, J. D. Macklis, and G. M. Church, "Molecular recordings by directed CRISPR spacer acquisition," *Science (80-.).*, vol. 353, no. 6298, p. aaf1175-aaf1175, 2016.

[11] R. U. Sheth, S. S. Yim, F. L. Wu, and H. H. Wang, "Multiplex recording of cellular events over time on CRISPR biological tape," *Science (80-.).*, vol. 958, no. November, p. eaao0958, 2017.

[12] P. Ghosh, L. A. Bibb, and G. F. Hatfull, "Two-step site selection for serine-integrase-mediated excision: DNA-directed integrase conformation and central dinucleotide proofreading," *Proc. Natl. Acad. Sci.*, vol. 105, no. 9, pp. 3238–3243, 2008.

[13] A. Shur and R. M. Murray, "Repressing Integrase attachment site operation with CRISPR-Cas9 in E. coli," *bioArxiv*, no. 110254, 2017.

[14] P. T. Chansb, H. Ohmorill11, J.-I. Tomizawall, and J. Lebowitzs, "Nucleotide Sequence and Gene Organization of ColE1 DNA*," *J. Biol. Chem.*, vol. 260, no. 15, pp. 8925–8935, 1985.

[15] J. A. Brophy and C. A. Voigt, "Antisense transcription as a tool to tune gene expression," *Mol. Syst. Biol.*, vol. 12, no. 1, pp. 854–854, Jan. 2016.

bioRxiv preprint doi: https://doi.org/10.1101/225151; this version posted November 25, 2017. The copyright holder for this preprint (which was not certified by peer review) is the author/funder, who has granted bioRxiv a license to display the preprint in perpetuity. It is made available under aCC-BY-ND 4.0 International license.

[16] L. Yang, A. A. K. Nielsen, J. Fernandez-Rodriguez, C. J. McClune, M. T. Laub, T. K. Lu, and C. A. Voigt, "Permanent genetic memory with greater than 1-byte capacity," *Nat. Methods*, vol. 11, no. 12, pp. 1261–1266, 2014.

[17] R. Lutz and H. Bujard, "Independent and tight regulation of transcriptional units in escherichia coli via the LacR/O, the TetR/O and AraC/I1-I2 regulatory elements," *Nucleic Acids Res.*, vol. 25, no. 6, pp. 1203–1210, 1997.

[18] F. St-Pierre, L. Cui, D. G. Priest, D. Endy, I. B. Dodd, and K. E. Shearwin, "One-step cloning and chromosomal integration of DNA," *ACS Synth. Biol.*, vol. 2, no. 9, pp. 537–541, 2013.

[19] A. A. Nielsen and C. a Voigt, "Multi-input CRISPR/Cas genetic circuits that interface host regulatory networks," *Mol. Syst. Biol.*, vol. 10, no. 11, pp. 763–763, Nov. 2014.