Missing *pstS* locus associated with an insertion in *tetM* in vancomycin resistant *Enterococcus faecium*

Kimon Lemonidis[1], Talal S. Salih[1,2], Stephanie J. Dancer[3,4], Iain S. Hunter[1], and Nicholas P. Tucker[1]

[1] Strathclyde Institute of Pharmacy and Biomedical Sciences, University of Strathclyde, Glasgow G4 0RE, U.K.

[2] College of Science, University of Mosul, Mosul, Iraq

[3] Department of Microbiology, Hairmyres Hospital, NHS Lanarkshire, G75 8 RG UK

[4] School of Applied Sciences, Edinburgh Napier University, Edinburgh, EH11 4BN, UK

Corresponding author: Nicholas P. Tucker, e-mail: nick.tucker@strath.ac.uk , tel: +44 (0)141 548 2861

Keywords: *Enterococcus faecium*, vancomycin resistance, MLST, *pstS, tetM*

Subject category: Microbial epidemiology

Word count: 2,140

Depositories: The GenBank/ENA/DDBJ accession numbers for VREF001-5 sequences are PJZQ00000000-PJZU00000000 (BioProject ID: PRJNA422798).

Abbreviations: MLST (multi-locus sequence typing), ST (sequence type), VRE (vancomycin resistant *Enterococcus*), VREfm (vancomycin resistant *Enterococcus faecium*), ISPs (ion sphere particles), CARD (comprehensive antibiotic resistance database).

Abstract

Multi-locus sequencing typing (MLST) is frequently used to monitor the phylogeny of outbreaks of infection. For vancomycin-resistant *Enterococcus faecium* (VREfm) infections, MLST is now becoming limited in resolution due to the recent emergence of VREfm strains with a missing MLST locus (*pstS*), reported in Australia and England. Here, by performing whole genome sequencing on five VREfm strains isolated from two Scottish hospitals, we identified that four were missing the *pstS* locus, while the other one had a unique for the UK MLST sequence type (ST262). Phylogenetic comparison with other *pstS*-null VREfm genomes indicates that the *pstS*-null Scottish isolates are closely related to strains from Australia. We further observed that loss of *pstS* is strongly correlated with an insertion in a *tetM* gene, which results in increased susceptibility to tetracyclines.

Vancomycin resistant *Enterococcus* (VRE) was first identified about three decades ago, and has now become a major nosocomial pathogen. It typically infects immunocompromised patients and can cause endocarditis, bloodstream, urinary tract and skin infections [1]. VRE infections are generally more serious than those caused by vancomycin-susceptible enterococci, and are associated with higher mortality rates [2]. Among all VRE species, vancomycin resistant *Enterococcus faecium* (VREfm) is responsible for the majority of hospital infections. VREfm has been recently listed as a high priority pathogen for research and development of new antibiotics by the World Health Organisation [3]. Various measures have been implemented to monitor the spread of VREfm infections, including multi-locus sequence typing (MLST); this relies on characterising the allelic profile of seven "house-keeping" genes, located in the *E. faecium* chromosome [4]. Although useful, this MLST scheme is of limited resolution to accurately capture the clonal type of isolated *E. faecium* strains [5–7]. Furthermore, VREfm isolates lacking the *pstS* MLST-gene locus have recently emerged in both UK [7] and Australia [8].

Here, we have used whole genome sequencing to identify four VREfm isolates from Scottish hospitals, which lack the *pstS* locus, and another Scottish VREfm isolate with a MLST profile that is unique for the UK. Additionally, we provide information regarding their resistance profiles and epidemiology.

VRE strains were isolated from 5 patients in 2 Scottish hospitals; these patients developed complications following either biliary or colonic surgery, and had been treated with various combinations of penicillin, amoxicillin, flucloxacillin, Tazocin, gentamicin, metronidazole and vancomycin during their hospital stay. The VRE strains were spread on horse blood agar, and single colonies were transferred to Mueller Hinton broth (Oxoid) liquid, and subsequently spread to Mueller Hinton broth agar; single colony cultures of these were subsequently used for DNA isolation. Genomic DNA was extracted using an Isolate II genomic DNA kit (Bioline), using the manufacturer's instructions for difficult to lyse Gram-positive bacteria. DNA libraries were then prepared using the NEBNext® Fast DNA Fragmentation and Library Prep Set for Ion Torrent™ (New England Biolabs): briefly, 1 µg of plasmid DNA was fragmented, and Ion Xpess barcode adapters (Life Technologies) were ligated to the DNA fragments; after clean-up using Agencourt AMPure XP beads (Beckman Coulter), 400 bp target fragments were isolated following 18 min electrophoresis on E-gel® SizeSelect™ agarose gels (Life Technologies); these were subsequently amplified by PCR and, following another clean-up with Agencourt® AMPure® XP beads, the quality of the resulting DNA libraries was assessed on a 2100 Bioanalyzer® (Agilent Technologies), using high sensitivity DNA chips (Agilent Technologies).Template positive Ion Sphere™ particles (ISPs) for semiconductor sequencing were prepared using the Ion Touch 2 System (Life Technologies). Enriched ISPs were loaded into ion v2 BC 316™ chips (2 genomes per chip) and sequenced on an Ion PGM™ system (Life Technologies). Low quality reads (quality score threshold: 0.05) were trimmed using CLC genomics Workbench (Qiagen, version 9.5.2), and resulting reads were assembled using SPAdes (St. Petersburg genome assembler, version 3.9). Contigs having less than 1000 bp sequences were discarded. The remaining contigs were reordered on Mauve (version 20150226) using the *E. faecium* Aus0004 genome [9] as reference, and resulting genome sequences were submitted to NCBI (Submission ID: SUB3113677). Antibiotic resistant genes were identified as perfect, strict or loose matches against resistant genes of the comprehensive antibiotic resistance database (CARD) [10]. Sequence reads of *pstS*-null genomes from England and Australia were obtained from European Nucleotide

Archive, and reads were assembled using CLC genomics Workbench; contigs having less than 200 bp were discarded. *In silico* MLST analysis was performed using the PubMLST website (http://pubmlst.org/) [11]. Alignments of genomes were done using the REALPHY (Reference sequence Alignment based Phylogeny builder) online tool (version 1.12) [12], with *E. faecium* Aus0004 [9], Aus0085 [13], E1071 and E1162 [14] as references. Minimum inhibitory concentrations (MICs) were calculated using either VITEK 2 or the microdilution method in cation adjusted Mueller-Hinton broth media (BD Biosciences).

All Scottish VRE strains sequenced (VREF001-5) had 2.9-3.0 Mb genomes with 37.6-37.7% GC content (table 1). Analysis of average nucleotide identity and tetra correlation search (TCS) against database genome sequences, using JSpeciesWS (version 3.0.12) [15], revealed that all four VRE isolates were *Enterococcus faecium* species, with over 99.9% identical sequences among aligned (>97%) VREF001, VREF002, VREF004 and VREF005 sequences, and with VREF003 displaying around 16% unique sequences compared to the other 4 genomes. *In silico* MLST analysis of VREF001-5 genomes identified VREF003 as sequence type (ST) 262, which has not been previously reported in the United Kingdom, while no sequence type could be assigned for the other 4 genomes, due to the missing *pstS* allele. However, all five VREfm strains sequenced in this study do have a *pstS* homologue within a *pst* operon (also referred to as *pstS2*), which is thought to be the actual *pstS* housekeeping gene in *E. faecium* [7, 8].

Analysis of the antibiotic resistance gene profiles of these five isolates identified the multi-aminoglycoside resistant gene *aac(6')-Ii*, in all 5 strains, and *aac(6')-aph(2")*, in all but VREF004; all strains had an ampicillin resistant gene (*pbp5*), at least 1 macrolide-lincosamide-streptogramin resistant gene (*ermB*) and the vancomycin-teicoplanin resistance gene, *vanA.* All strains had the spectinomycin resistant gene *ant(9)-Ia*, except strain VREF003, while only VREF003 had a tetracycline transporter gene (*tetL*) (Table 2). It is notable that all isolates had a *Tn5801*-like transposon (full-length or fragment) containing a sequence similar to the *Staphylococcus aureus* Mu50 *tetM* gene [16]. All of the isolates sequenced in this study had a 3,229 bp insertion in this *tetM* gene, containing the trimethoprim-resistant gene *dfrG* and two more genes with unknown function. A similar insertion has been reported previously in a few ST17 and ST18 *E. faecium* strains [16] which is thought to result in defective protection against tetracyclines [17]. Lastly, all strains had a homologue of the *E. faecalis IsaA* gene which confers resistance to quinipristin-dalfopristin. However, the product of this gene (known as EatA), unlike the >99% identical $EatA_v$ product found in some *E. faecium* strains, has a threonine at position 450, which is associated with increased susceptibility towards quinupristin-dalfopristin [18, 19].

As a result, all these isolates exhibited high level resistance to vancomycin, 4/5 had high level resistance to teicoplanin, associated with the presence of *vanSA* (absent from VREF005, which displayed low level resistance) and 4/5 had high level resistance to spectinomycin (apart from VREF003 which displayed low level resistance). All isolates had low level resistance to streptomycin, as well as resistance to a variety of other drugs. All isolates were susceptible to linezolid, chloramphenicol, tigecycline and Synercid (quinupristin-dalfopristin). VREF003 was the only isolate found to be resistant to tetracycline, doxycycline, oxytetracycline and minocycline, but unlike the other four isolates, it was found susceptible to rifampicin (Table 2). Since all five isolates had an identical *rpoB2* variant (assumed to exert some level of rifampicin-resistance), the decreased resistance of VREF003 towards rifampicin, compared to the other 4 strains, may be due to the lack of any

mtrR and *marA* homologues in VREF003 genome (present in the other four isolates); these two genes have been shown to confer resistance to multiple drugs, including rifampicin, in other bacteria [20, 21]. Alternately VREF001-2 and VREF004-5 may have an *mtrR*-independent mechanism of reduced permeability for rifampicin compared to VREF003 [22]. Antibiotic susceptibility tests indicated that all five isolates are classified as multi-drug resistant enterococci, according to standardised international terminology [23].

We then performed a phylogenetic comparison of VREF001-5 genomes with other known VREfm genomes reported to have a missing *pstS* locus [7, 8], as well as with other hospital-associated or commensal *E. faecium* isolates. These included: 10 Australian *pstS*-null *E. faecium* strains isolated from 5 different hospitals, all 5 reported *pstS*-null *E. faecium* strains isolated from a single English hospital, 6 hospital-associated isolates, of differnt MLST sequence type each, 3 isolates (BM4538, UAA1025 and E2883) previously reported to have an insertion in the *tetM*-locus [16], and 2 commensal strains. This analysis indicated that Scottish *pstS*-null isolates are more closely related to the Australian strains, rather than the English *pstS*-null VREfm variants (Fig. 1). Each geographical group had a unique 6-locus MLST profile, although all members were highly related to each other. This is suggestive of a single spread for each geographic location. Given also that both Australian [8] and Scottish (this study) VREfm *pstS*-null strains were found in different hospitals, it is likely that these two clones spread through the community, with the possibility of the Scottish strains (isolated in 2017) deriving from an Australian *pstS*-null strain (most such strains isolated between 2014 to 2015). On the other hand, all English VREfm strains with missing *pstS* locus [7] may have spread from the same hospital (Kathy Raven, personal communication). Nevertheless, it is clear that none of the Scottish or Australian VREfm strains with missing *pstS* are commensal stains, since members of the latter (clade B) are phylogenetically distinct (Fig. 1). VREF003 is more phylogenetically related to ST18 VREfm isolates (Fig. 1), in agreement with a previous study showing a phylogenetic relationship between ST262 and ST18 *E. faecium* strains [24]. All VREfm strains lacking the *pstS* locus (4/4 Scottish, 10/10 Australian and 5/5 English) were found to also contain a *Tn5801*-like transposon with an insertion in the *tetM* locus. This genotype, previously documented in the MLST-typeable Aus0004, BM4538, E2883 and UAA1025 [16] included in this analysis, was further observed in VREF003, ERR374934 and ERR374968. Collectively, it appears that the *tetM* insertion in VREfm is associated with missing *pstS*, and STs: 17, 18, 80 and 262 (Fig. 1).

It has been recently demonstrated that MLST analysis is inferior to whole genome sequence analysis for outbreak investigations of VREfm [7], because the high rate of recombination events occurring within the *E. faecium* chromosome cannot be captured adequately by MLST analysis [24, 25]. Furthermore, the emergence of non-typeable VREfm strains poses an extra obstacle in implementing the MLST scheme for VREfm phylogenetic analysis. Non-typeable VREfm strains have emerged quite recently and have been shown to be very rare in the UK: in a study encompassing whole genome sequencing of nearly 500 *E. faecium* healthcare-associated isolates from 2001-2011 in the UK and Ireland, there were only 5 cases of *pstS*-null VRE strains, all of which were isolated from a single English hospital, between 2004 and 2005 [7].The occurrence of such strains was even more recent in Australia: the first two strains were isolated in 2013, but numbers increased rapidly to a total of 66 cases, by 2015 [8].

Here, we report four additional non-typeable VREfm strains isolated in 2017, which are the first identified in Scotland. Their striking genomic similarity, combined with the fact that one

was isolated from a different hospital, indicates that these, although deriving from a single strain type, are not necessarily hospital-acquired, but may be health-care associated, or spread throughout the community. Although, transmission may have occurred through the frequent transfer of equipment, specimens, staff and patients between these two hospitals (located in the same health board and being only 14 miles apart), evidence suggests that VRE strains are also transmitted outside hospitals, such as in long term care facilities [26]. However, even within the same hospital, VRE transmission routes can be complex with closely related VRE strains re-appearing in the same ward after several months, or transmitted to patients located in different wards [27]. Indeed, we also observed re-appearance of a *pstS*-null strain (isolate VREF005) in the same hospital, seven months after discharge of the last patient carrying one. Additionally, VRE clones can spread outside health-care facilities, since strains can be carried in patients for long periods, ranging from a few months to a few years following their discharge from hospital [28, 29].

Consistent with previous studies [7, 8], the newly sequenced VREfm strains with the missing *pstS* locus were also *vanA* type. We further identified that loss of *pstS* in VREfm is strongly associated with an insertion in a *tetM* gene (19/19 cases tested). Since, the 10 Australian *pstS*-null strains analysed here, were chosen to represent all 3 health jurisdictions and phylogenetically distinct clades of the Australian *pstS*-null collection [8], it is expected that the remaining 56 strains of this collection also contain a *Tn5801*-like transposon with an insertion in the *tetM* locus. Such insertion leads to apparent inactivation of the resulting gene product towards tetracyclines, as can be inferred from Aus0004 [17], VREF001-2 and VREF004-5 (this study) susceptibility tests against tetracycline, doxycycline and minocycline. All sequenced isolates were resistant to trimethoprim, and the cause of such resistance is most likely the *dfrG* gene inserted into the *tetM* locus.

Tigecycline, Synercid, and linezolid are frequently used for management of multi-drug-resistant enterococcal infections [1, 30]. None of the isolates sequenced had a tigecycline, Synercid, or linezolid resistant gene and as a consequence they were all susceptible to these 3 drugs. Thus these antibiotics may still be the favourable option for combating VREfm strains with a missing *pstS* locus.

Funding information

This work was supported by the Scottish Chief Scientist Office grant TCS/16/24 to NPT, SJD and ISH.

Conflicts of interest

The authors declare that they have no conflicts of interest with the contents of this article.

References

1. **O'Driscoll T, Crank CW**. Vancomycin-resistant enterococcal infections: epidemiology, clinical manifestations, and optimal management. *Infect Drug Resist*

2015;8:217–30.

2. **Orsi GB, Ciorba V**. Vancomycin resistant enterococci healthcare associated infections. *Ann Ig* 2013;25:485–492.

3. **WHO**. Prioritization of pathogens to guide discovery, research and development of new antibiotics for drug-resistant bacterial infections, including tuberculosis. 2017;88.

4. **Homan WL, Tribe D, Poznanski S, Li M, Hogg G, *et al.*** Multilocus sequence typing scheme for Enterococcus faecium. *J Clin Microbiol* 2002;40:1963–71.

5. **de Been M, Pinholt M, Top J, Bletz S, Mellmann A, *et al.*** Core Genome Multilocus Sequence Typing Scheme for High- Resolution Typing of Enterococcus faecium. *J Clin Microbiol* 2015;53:3788–97.

6. **Brodrick HJ, Raven KE, Harrison EM, Blane B, Reuter S, *et al.*** Whole-genome sequencing reveals transmission of vancomycin-resistant Enterococcus faecium in a healthcare network. *Genome Med* 2016;8:4.

7. **Raven KE, Reuter S, Reynolds R, Brodrick HJ, Russell JE, *et al.*** A decade of genomic history for healthcare-associated Enterococcus faecium in the United Kingdom and Ireland. *Genome Res* 2016;26:1388–1396.

8. **Carter GP, Buultjens AH, Ballard SA, Baines SL, Tomita T, *et al.*** Emergence of endemic MLST non-typeable vancomycin-resistant Enterococcus faecium. *J Antimicrob Chemother* 2016;71:3367–3371.

9. **Lam MMC, Seemann T, Bulach DM, Gladman SL, Chen H, *et al.*** Comparative Analysis of the First Complete Enterococcus faecium Genome. *J Bacteriol* 2012;194:2334–2341.

10. **McArthur AG, Waglechner N, Nizam F, Yan A, Azad MA, *et al.*** The Comprehensive Antibiotic Resistance Database. *Antimicrob Agents Chemother* 2013;57:3348–3357.

11. **Jolley KA, Maiden MC**. BIGSdb: Scalable analysis of bacterial genome variation at the population level. *BMC Bioinformatics* 2010;11:595.

12. **Bertels F, Silander OK, Pachkov M, Rainey PB, van Nimwegen E**. Automated Reconstruction of Whole-Genome Phylogenies from Short-Sequence Reads. *Mol Biol Evol* 2014;31:1077–1088.

13. **Lam MM, Seemann T, Tobias NJ, Chen H, Haring V, *et al.*** Comparative analysis of the complete genome of an epidemic hospital sequence type 203 clone of vancomycin-resistant Enterococcus faecium. *BMC Genomics* 2013;14:595.

14. **van Schaik W, Top J, Riley DR, Boekhorst J, Vrijenhoek JE, *et al.*** Pyrosequencing-based comparative genome analysis of the nosocomial pathogen Enterococcus faecium and identification of a large transferable pathogenicity island. *BMC Genomics* 2010;11:239.

15. **Richter M, Rosselló-Móra R, Oliver Glöckner F, Peplies J**. JSpeciesWS: a web server for prokaryotic species circumscription based on pairwise genome comparison. *Bioinformatics* 2016;32:929–931.

16. **León-Sampedro R, Novais C, Peixe L, Baquero F, Coque TM**. Diversity and evolution of the Tn5801-tet(M)-like integrative and conjugative elements among Enterococcus, streptococcus, and Staphylococcus. *Antimicrob Agents Chemother*

2016;60:1736–1746.

17. **Cattoir V, Isnard C, Cosquer T, Odhiambo A, Bucquet F, *et al.*** Genomic analysis of reduced susceptibility to Tigecycline in Enterococcus faecium. *Antimicrob Agents Chemother* 2015;59:239–244.

18. **Singh K V., Weinstock GM, Murray BE**. An Enterococcus faecalis ABC homologue (Lsa) is required for the resistance of this species to clindamycin and quinupristin-dalfopristin. *Antimicrob Agents Chemother* 2002;46:1845–1850.

19. **Isnard C, Malbruny B, Leclercq R, Cattoira V**. Genetic basis for in vitro and in vivo resistance to lincosamides, streptogramins a, and pleuromutilins (LSAP Phenotype) in Enterococcus faecium. *Antimicrob Agents Chemother* 2013;57:4463–4469.

20. **Cohen SP, McMurry LM, Levy SB**. marA locus causes decreased expression of OmpF porin in multiple-antibiotic-resistant (Mar) mutants of Escherichia coli. *J Bacteriol* 1988;170:5416–22.

21. **Spratt BG, Balthazar JT, Hagman KE, Pan W, Judd RC, *et al.*** Resistance of Neisseria gonorrhoeae to antimicrobial hydrophobic agents is modulated by the mtrRCDE efflux system. *Microbiology* 1995;141:611–622.

22. **Abadi FJ, Carter PE, Cash P, Pennington TH**. Rifampin resistance in Neisseria meningitidis due to alterations in membrane permeability. *Antimicrob Agents Chemother* 1996;40:646–51.

23. **Magiorakos A, Srinivasan A, Carey RB, Carmeli Y, Falagas ME, *et al.*** Multidrug-resistant, extensively drug-resistant and pandrug-resistant Bacteria : an International Expert Proposal for Interim Standard Definitions for Acquired Resistance. *Microbiology* 2011;18:268–281.

24. **Bowden R, Ansari MA, Jensen SO, Ip CLC, Espedido BA, *et al.*** Evolutionary dynamics of Enterococcus faecium reveals complex genomic relationships between isolates with independent emergence of vancomycin resistance. *Microb Genomics*;2. Epub ahead of print 2016. DOI: 10.1099/mgen.0.000048.

25. **Howden BP, Holt KE, Lam MMC, Seemann T, Ballard S, *et al.*** Genomic insights to control the emergence of vancomycin-resistant enterococci. *MBio* 2013;4:e00412-13.

26. **Brodrick HJ, Raven KE, Harrison EM, Blane B, Reuter S, *et al.*** Whole-genome sequencing reveals transmission of vancomycin-resistant Enterococcus faecium in a healthcare network. *Genome Med* 2016;8:4.

27. **Raven KE, Goulliouris T, Brodrick H, Coll F, Brown NM, *et al.*** Complex Routes of Nosocomial Vancomycin-Resistant Enterococcus faecium Transmission Revealed by Genome Sequencing. *Clin Infect Dis* 2017;64:886–893.

28. **Sohn KM, Peck KR, Joo E-J, Ha YE, Kang C-I, *et al.*** Duration of colonization and risk factors for prolonged carriage of vancomycin-resistant enterococci after discharge from the hospital. *Int J Infect Dis* 2013;17:e240–e246.

29. **Karki S, Land G, Aitchison S, Kennon J, Johnson PDR, *et al.*** Long-term carriage of vancomycin-resistant enterococci in patients discharged from hospitals: a 12-year retrospective cohort study. *J Clin Microbiol* 2013;51:3374–9.

30. **Arias CA, Contreras GA, Murray BE**. Management of Multi-Drug Resistant Enterococcal Infections. *Clin Microbiol Infect* 2010;16:555–62.

Table 1. Features of assembled sequences of the five isolates.

Isolate ID	VREF001	VREF002	VREF003	VREF004	VREF005
Accession	SAMN08196781	SAMN08196782	SAMN08196783	SAMN08196784	SAMN08196785
Size (bp)	2,987,950	2,990,107	2,913,585	2,999,027	2,976,182
GC Content (%)	37.6	37.6	37.7	37.6	37.6
N50	39407	36771	32649	43809	38134
L50	23	22	28	21	22
Contigs	185	185	188	184	190
Depth of coverage	194.91	131.85	170.17	182.45	218.18

Table 2. MIC values (mg/L) of selected antibiotics against the 5 Scottish VREfm isolates. MIC values were calculated on VITEK2, except for vancomycin, streptomycin, spectinomycin, tetracycline, oxytetracycline, doxycycline, minocycline and rifampicin, where the microdilution method on cation-adjusted Mueller-Hinton broth was used. Resistance to a given antibiotic is indicated in black, while susceptibility is indicated in red. Resistant genes correspond to either, strict and perfect matches, or to some loose matches (underlined), against antibiotic resistance genes of the comprehensive antibiotic resistance database (CARD). The full-length penicillin-binding protein 5 gene (*pbp5*), for which no reference gene in CARD exists, was found in all genomes. Numbers at top right of resistant genes correspond to the sequenced strains (last digit of isolate ID) carrying these genes.* *tetL* in VREF003 had > 99% identity with reference CARD gene, *rpoB2* match had zero evalue for all 5 genomes, and *ant(9)-Ia* was the only spectinomycin resistant gene identified in these isolates. ND: Not determined.

		VREF001	VREF002	VREF003	VREF004	VREF005	Resistance genes
Beta lactams	Amoxicillin	> 32	> 32	> 32	> 32	> 32	*pbp5* [1-5]
	Co-Amoxiclav	> 8	> 8	> 8	> 8	> 8	*pbp5* [1-5]
Glycopeptides	Vancomycin	64	512	> 512	512	128	*vanA* [1-5], *vanHA* [1-3, 5], *vanRA* [1-5], *vanSA* [1-4], *vanXA* [1-5], *vanYA* [2-4], *vanZA* [3]
	Teicoplanin	> 32	> 32	> 32	> 32	4	*vanA* [1-5], *vanHA* [1-3, 5], *vanRA* [1-5], *vanSA* [1-4], *vanXA* [1-5], *vanYA* [2-4], *vanZA* [3]
Fluoroquinolones	Ciprofloxacin	> 4	> 4	> 4	> 4	ND	*efmA* [1-5]
Aminoglycosides	Gentamycin	> 128	> 128	> 128	> 128	> 128	*aac(6')-aph(2")* [1-3, 5]
	Kanamycin	> 128	> 128	> 128	> 128	> 128	*aac(6')-aph(2")* [1-3, 5], *aph(3')-IIIa* [1-2, 4-5], *aac(6')-Ii* [1-5]
	Streptomycin	32	32	32	32	32	None
	Spectinomycin	512	512	32	> 512	512	*ant(9)-Ia* [1-2, 4-5]
Tetracyclines	Tetracycline	≤ 0.25	≤ 0.25	> 128	≤ 0.25	≤ 0.25	*tetL* [3]
	Oxytetracycline	1	≤ 0.25	> 128	0.5	≤ 0.25	*tetL* [3]
	Doxycycline	≤ 0.25	≤ 0.25	16	≤ 0.25	≤ 0.25	*tetL* [3]
	Minocycline	≤ 0.13	≤ 0.13	16	≤ 0.13	≤ 0.13	*tetL* [3]
	Tigecycline	≤ 0.13	≤ 0.13	≤ 0.13	≤ 0.13	≤ 0.13	None
Macrolides, Lincosamides, Streptogramins	Clarithromycin	> 4	> 4	> 4	> 4	> 4	*ermA* [1-2, 4-5], *ermB* [1-5]
	Quinupristin-Dalfopristin	0.5	0.5	0.5	1	0.5	None
Others	Chloramphenicol	8	8	≤ 4	8	8	None
	Linezolid	2	2	2	2	2	None
	Nitrofurantoin	128	256	128	256	256	Unknown
	Trimethoprim	> 16	> 16	> 16	> 16	> 16	*dfrG* [1-5]
	Rifampicin	16	16	1	16	16	*rpoB2* [1-5]

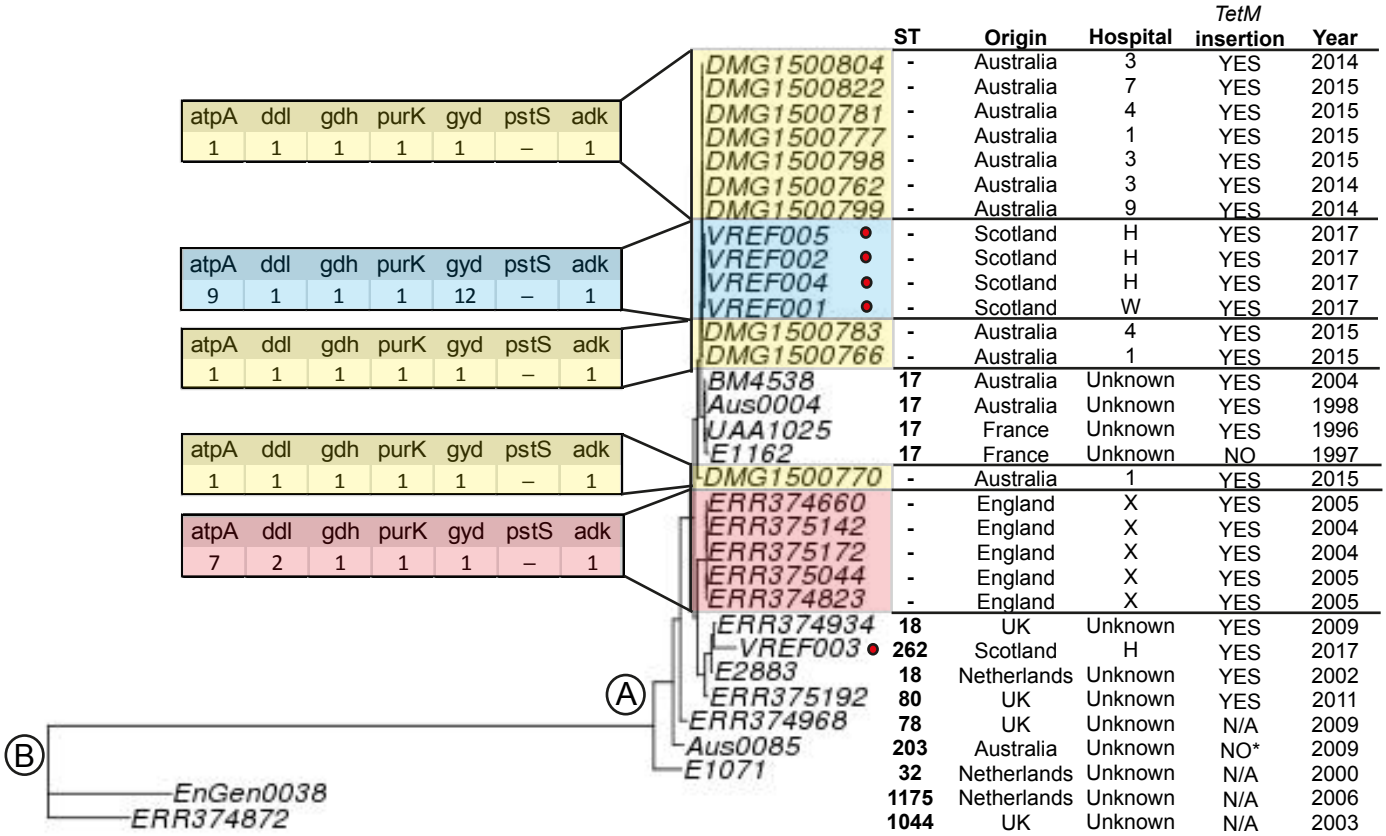

Fig. 1. Phylogenetic tree of selected *Enterococcus faecium* genomes, constructed using the REALPHY (Reference sequence Alignment based Phylogeny builder) online tool, with Aus0004, Aus0085, E1162 and E1071 used as reference genomes. The MLST sequence type (ST), country of origin, hospital and year of isolation are given for each sequenced genome. The MLST alleles of non-typeable isolates are also provided. Lastly, information is given on whether a *tetM* insertion encompassing *dfrG* and two putative genes was found in these genomes. ND: not determined (*tetM* sequences found at the borders of contigs). N/A: not applicable (no tetM sequences found). * Although no such insertion was identified in Aus0085, there was a frameshift mutation within its *tetM* gene. Genomes sequenced in this study (VREF001-5) are indicated with a red circle.