# First evidence that intrinsic fetal heart rate variability exists and is affected by chronic hypoxia

Martin G. Frasch[1], Christophe Herry[2], Yui Niu[3] and Dino A. Giussani[3]

[1] Department of Obstetrics and Gynecology, University of Washington, Seattle, WA, USA
[2] Ottawa Hospital Research Institute, Ottawa, ON, Canada
[3] Department of Physiology and Developmental Neuroscience, Cambridge University, Cambridge, UK

**Short title**: Fetal intrinsic heart rate variability

**Keywords**: In utero, ex vivo, Langendorff, HRV, hypoxia

**Corresponding author:**
Martin G. Frasch
Department of Obstetrics and Gynecology
University of Washington
1959 NE Pacific St
Box 356460
Seattle, WA 98195
Phone: +1-206-543-5892
Fax: +1-206-543-3915
Email: mfrasch@uw.edu

**Abstract**
Heart rate variability (HRV) is an important indicator of health and disease, yet its physiological origins are poorly understood. The contribution of intrinsic and extrinsic sources to HRV is not known. In a near-term fetal sheep model, we aimed to identify fetal HRV measures reflecting intrinsic contributions to HRV. *Ex vivo* Langendorff preparation was used to record intrinsic HRV in animals who were normoxic or hypoxic *in vivo*.
We identify the intrinsic HRV in isolated hearts from fetal sheep in late gestation and how it is affected by chronic fetal hypoxia.

**Significance Statement**
Heart rate variability (HRV) is an important indicator of health and disease, yet its physiological origins are poorly understood. Both, the heart, intrinsically, and extrinsic systems, such as the brain, are hypothesized to contribute to HRV. In a near-term fetal sheep model of human development, we identified fetal HRV components reflecting intrinsic contributions to HRV. In addition, we show that these intrinsic HRV components carry memory of chronic oxygen deprivation the fetus experienced during the last third of gestation.

## Introduction

Fetal heart rate (FHR) monitoring is widely used clinically during labour, although its ability to identify fetuses at risk of severe metabolic acidosis is poor.(1) It is established that normal FHR variability (fHRV) represents a complex, nonlinear integration of the sympathetic and parasympathetic nervous system activities. Fetal body and breathing movements, baroreflex and circadian processes also influence HRV.(2,3,4-6) There is also some evidence that intrinsic pacemaker rhythms of the sino-atrial node affect HRV in critically ill adults.(7)

However, whether intrinsic HRV (iHRV) exists in the fetal period and whether this is affected by chronic fetal hypoxia has never been tested. Here, we show iHRV in isolated hearts from fetal sheep in late gestation. We also show that chronic fetal hypoxia has significant effects on iHRV.

**Results**

Maternal $P_aO_2$ was reduced in hypoxic pregnancy (42.0±1.2mmHg vs. 105.7±3.7 mmHg, $P<0.05$). Fetuses exposed chronic hypoxia had a significant reduction in the partial pressure of arterial oxygen (11.5±0.6 mmHg vs. 20.9±0.5mmHg, $P<0.05$).

Hearts isolated from chronically hypoxic fetuses showed distinct changes in iHRV measures across four signal-analytical domains (Fig. 1). There were approximately 4-fold increases in the Grid transformation feature as well as the AND similarity index (sgridAND, informational domain) and a 4-fold reduction in the Scale dependent Lyapunov exponent slope (SDLEalpha, invariant domain). We also detected a 2-fold reduction in the Recurrence quantification analysis, the percentage of laminarity and recurrences and maximum diagonal line (pL, pR, dlmax, all from geometric domain) and (AsymI, energetic domain). There was a moderate fall in the Detrended fluctuation analysis (area under the curve, DFA AUC, invariant domain). In summary, the isolated fetal hearts from the hypoxic pregnancy group exhibit a lower complexity in iHRV. For dlmax and sgridAND measures, this is also correlated to left ventricular end-diastolic pressure (LVEDP) across both groups (Fig. 2 and 3).

## Discussion

Babies at both ends of the birth weight spectrum are at high risk for cardiovascular disease, ischemic heart disease and hypertension in adulthood.(8) Heart fitness is largely determined by hemodynamic, growth factor, and oxygen/nutrient cues before birth.(9) Hence, the primary chronic diseases affecting western societies originate in prenatal life.(9)

Our findings imply that HRV monitoring can reveal intrinsic cardiac function. HRV has served as a scientific and diagnostic tool to quantify the fluctuations of cardiac activity under various conditions since the early 1980's. (10) However, little is known about its biological origins. From studies of healthy adult subjects during exercise and studies of heart-transplant recipients, we know that intrinsic components of cardiac rhythm contribute substantially to HRV.(11-13) The regulation of cardiac function is impaired during inflammation, as evidenced by a reduction in some HRV measures. Reduction of certain HRV measures during systemic inflammation is strongly correlated with an unfavourable prognosis.(14)

Our findings provide the first evidence that iHRV originates in fetal life and that chronic fetal hypoxia significantly alters it. The relationship between nonlinear measures of fHRV and LVEDP suggests that such fHRV measures may reflect fetal myocardial function. Therefore, they may be clinically useful as a biomarker of cardiac reserve and decompensation during antepartum or intrapartum monitoring. Future studies should examine the potential of such fHRV measures to identify fetuses experiencing chronic hypoxia and other conditions, such as infection, that may impact myocardial function before and after birth.

The findings raise several exciting questions. What is the transfer mechanism by which *in utero* hypoxia imprints upon iHRV? May it be via the impact on myocardiogenesis, which then impacts patterns of contractility that we measure by LVEDP? Does the putative transfer mechanism of i*n utero* hypoxia upon iHRV features depend upon vagal and sympathetic fluctuations *in vivo* or is it entirely autochthonic, emerging from the adaptive processes within the excitatory cells in response to chronic hypoxia?

Findings in fetal sheep subjected to a labour-like insult with worsening acidemia and the work in adult animal models of acidemia indicate that around a pH of 7.2, the physiological myocardial activity is curbed via the Bezold-Jarisch-like reflex. This is a vagally mediated myocardial depression reflex that reduces cardiac output under conditions of moderate acidemia; it is thought to preserve depleting myocardial energy reserves.(15,16,17-19) When labour is associated with worsening acidemia, cardiac decompensation contributes to brain injury.(20) Acidemia impacts myocardial contractility, which decreases cardiac output and arterial blood pressure. It is not yet understood how hypoxic-acidemia may disrupt sinus node pacemaker activity, thus disrupting iHRV.

Infection also impacts myocardial function and pacemaker activity. Endotoxemia has negative inotropic effects by inducing cardiac TNF-α release. (21,22) Fetuses with preterm premature rupture of membranes (PROM) have changes in the cardiac diastolic function compared with fetuses of women with uncomplicated pregnancies. (23) Preterm birth occurs in 8–13% of pregnancies in the Western world, and ~27 % of these are associated with inflammatory conditions, such as chorioamnionitis. (24) Although the fundamental structure of the cardiovascular system is established early in pregnancy, cardiomyocytes generally cease dividing towards term when they undergo a process of maturation in preparation for the hemodynamic transition at birth. (24) Seven days after a single intra-amniotic injection of lipopolysaccharide (LPS), newborn preterm lambs have reduced left ventricular output, accompanied by an increase in the right ventricle-to-left ventricle + septum ratio. (25) Fetal exposure to seven days of intrauterine inflammation has major adverse repercussions on heart structure at preterm delivery by giving rise to a suite of changes that result in compromised cardiac performance, vulnerability to damage and arrhythmias. This is of major clinical importance to the many infants born preterm and to babies who are exposed to chorioamnionitis prenatally. (24)

Fetal heart exposed to chorioamnionitis may be more vulnerable to ischaemia at the time of delivery. The deleterious changes in the heart also have the potential to adversely affect cardiac function in the long term. (26) In cases of overwhelming fetal sepsis (the pathophysiologic counterpart to septic shock in adults), myocardial depression may lead to fetal death, as observed in cases with preterm PROM. The mechanism by which sepsis induces myocardial depression is not completely understood, so no clinical tools exist to detect it early. The most likely explanation is the action of soluble factors, such as bacterial products and cytokines, which are elevated in the circulation of patients with septic shock. (27-29) Neonates born with histologic chorioamnionitis have several hemodynamic abnormalities, including a decreased mean and diastolic blood pressure. Mean blood pressure correlates with umbilical cord IL-6 concentrations. (30) Some of these hemodynamic changes are present *in utero*. (31) Thus, a significant number of fetuses are exposed to variable

degrees of inflammation with or without hypoxia and acidemia, which may impact their cardiac development and reserves to safely make it through the trial of labour. Current methods to diagnose fetal and neonatal compromise due to infectious or hypoxic conditions leading to cardiovascular compromise are inadequate. (32) (33) Inflammation and hypoxic-acidemia *in utero* may act synergistically to make a newborn vulnerable to development of sepsis and heart injury. (34-36,37)

What may the identified iHRV features dlmax and sgridAND, which correlate to LVEDP, represent physiologically? The first feature is derived from a recurrence plot where the diagonal lines represent the trajectory visiting the same region of the phase space at different times. The lengths of diagonal lines in a recurrence plot are related to the predictability of the system dynamics. Perfectly predictable systems would have infinitely long diagonal lines in the recurrence plot (high dlmax). Stochastic and chaotic systems would have very short diagonal lines (low dlmax). (38-40) In our case, hypoxia reduces dlmax of iHRV, which correlates to an increased LVEDP compared to normoxic fetuses.

The grid transformation AND similarity index (sgridAND) measures the dynamical system phase space reconstruction trajectory, with a specific embedding dimension and time delay. It is binarized over a grid (*i.e.*, pixel visited by the trajectory=1, all others=0) to produce an image. Two grid images corresponding to different time delays or different windows in time are then compared. (41) The sgridAND measure is the normalized sum of the binary AND operation on the two compared images and represents a similarity index between the phase space trajectory from two consecutive windows. Low values indicate that the iHRV dynamics have changed while high values mean the dynamics are similar. The latter is the case for hypoxic fetuses' iHRV and correlates again with higher LVEDP.

Together, our findings indicate that *in utero* hypoxia reduces the short-term predictability of iHRV and increases its long-range similarity (note the phase space structure in the example of the hypoxic iHRV shown in Fig. 3). Both effects do not contradict each other, because the effects are captured in different signal-analytical domains, one being a geometric feature of iHRV and another referring to longer-term temporal processes in the informational domain. Importantly, both changes result in a consistent increase of LVEDP, a rare demonstration that a complex HRV property is linked to a clinical correlate in a meaningful way.

In future work we will test whether the mechanism by which memory of *in utero* chronic hypoxia is imprinted into iHRV and affects the LVEDP, is via alterations in the efficiency of sinu-atrial signal transduction that alter synchronization properties within the sinus node pacemaker cells.

Some 70% of insults precipitating an adverse outcome of labour occur antenatally. (35,42) The long-term clinical goal of this work is to improve identification of early signs of a septic, hypoxic or acidotic fetus or neonate, in order to intervene therapeutically. (32,33) We propose that the *in vivo – ex vivo* experimental paradigm used here and the iHRV findings we identified represent a first step toward characterizing iHRV properties in fetuses exposed to infection, hypoxic-acidemia and mixed conditions known to result in cardiac developmental abnormalities. Ultimately, our approach should lead to a battery of iHRV biomarkers that can be captured non-invasively from fetal ECG. This may contribute to a more timely identification of cardiovascular decompensation, such that selective postnatal treatment with erythropoietin or hypothermia may be deployed to prevent incipient brain injury. (15,43)

## Methods

Animal care followed the guidelines of the University of Cambridge Ethics Review Committee. All experiments were performed in accordance with the UK Home Office guidance under the Animals (Scientific Procedures) Act 1986.

Chronically catheterized ewes carrying male singleton fetuses were exposed to normoxia (n=6) or hypoxia (10% inspired O2, n=9) for the last third of gestation (105-138 dG; term~145 dG) in bespoke isobaric chambers, as before (Fig. 4).(44) At 138dG, isolated hearts were studied under a Langendorff preparation.

## Langendorff preparation

Each excised fetal heart was placed in ice-cold Krebs–Henseleit bicarbonate buffer. It was then cannulated via the aorta (<2 min from excision) and perfused through the coronary arteries whilst pulmonary, mediastinal, and peri-cardiac brown adipose tissue were excised. The ductus arteriosus was ligated. Pulmonary arteriotomy was performed. A re-circulating Krebs-Henseleit bicarbonate buffer solution containing ($mmol.L^{-1}$) 120 NaCl, 4.7 KCl, 1.2 $MgSO_2.7H_2O$, 1.2 $KH_2PO_4$, 25 $NaHCO_3$, 10 glucose, and 1.3 $CaCl_2.2H_2O$ was filtered through a 5 µm cellulose nitrate filter (Millipore, Bedford, MA, USA) and gassed with $O_2$:$CO_2$ (95:5) at 39.5°C. The first 200 ml of coronary effluent were discarded to free the circuit of blood cells.

Isolated hearts were perfused in retrograde fashion through the aorta at a constant pressure of 30mmHg. A small flexible non-elastic balloon was inserted into the left ventricle through the left atrium. The balloon was filled with distilled water and attached to a rigid distilled water-filled catheter connected to a calibrated pressure transducer (Argon Medical Devices, Texas, USA). The balloon volume was adjusted to obtain left ventricular end diastolic pressure (LVEDP) recording of approximately 5-10mmHg. After an initial stabilization period of 15 minutes, basal heart rate (HR), basal left ventricular systolic pressure (LVSP) and basal left ventricular end diastolic pressure were recorded. An M-PAQ data acquisition system (Maastricht Programmable AcQusition System, Netherlands) was used in the present study to record left ventricular pressures.

For HRV analysis purpose, all original recording traces of left ventricular pressure were exported to LabChart® 7 software (ADInstruments, UK).

### *FHRV analysis*

To derive fHRV fetal left ventricular pressure recordings sampled at 1kHz were analyzed with CIMVA (continuous individualized multiorgan variability analysis) software, as before.(45) Interbeat intervals were extracted from the pressure recordings using the systolic peaks. A range of 55 basal iHRV indices was then calculated across five signal-analytical domains from the interbeat interval time series, within 15 min segments in each heart, determined as an average of three non-overlapping 5 min intervals.

### *Statistical analysis*

Student T test for unpaired data was used to compare variables from the hypoxic versus the normoxic group assuming significance for $P<0.05$ (SigmaStat). Results are presented as Mean$\pm$SEM.

## Acknowledgements

Supported by CIHR and The British Heart Foundation

## References


1. Group IC (2017) Computerised interpretation of fetal heart rate during labour (INFANT): a randomised controlled trial. *Lancet* 389(10080):1719-1729.
2. Jensen EC, *et al.* (2009) The role of the neural sympathetic and parasympathetic systems in diurnal and sleep state-related cardiovascular rhythms in the late-gestation ovine fetus. *Am J Physiol Regul Integr Comp Physiol* 297(4):R998-R1008.
3. Frasch MG, *et al.* (2009) Nonlinear properties of vagal and sympathetic modulations of heart rate variability in ovine fetus near term. *Am J Physiol Regul Integr Comp Physiol* 296(3):R702-707.
4. Dalton KJ, Dawes GS, & Patrick JE (1977) Diurnal, respiratory, and other rhythms of fetal heart rate in lambs. *Am J Obstet Gynecol* 127(4):414-424.
5. Dalton KJ, Dawes GS, & Patrick JE (1983) The autonomic nervous system and fetal heart rate variability. *Am J Obstet Gynecol* 146(4):456-462.
6. Visser GH, Goodman JD, Levine DH, & Dawes GS (1982) Diurnal and other cyclic variations in human fetal heart rate near term. *Am J Obstet Gynecol* 142(5):535-544.
7. Papaioannou VE, Verkerk AO, Amin AS, & de Bakker JM (2013) Intracardiac origin of heart rate variability, pacemaker funny current and their possible association with critical illness. *Curr Cardiol Rev* 9(1):82-96.
8. Bibbins-Domingo K, Coxson P, Pletcher MJ, Lightwood J, & Goldman L (2007) Adolescent overweight and future adult coronary heart disease. *N Engl J Med* 357(23):2371-2379.
9. Thornburg KL, O'Tierney PF, & Louey S (2010) Review: The placenta is a programming agent for cardiovascular disease. *Placenta* 31 Suppl:S54-59.
10. Akselrod S, *et al.* (1981) Power spectrum analysis of heart rate fluctuation: a quantitative probe of beat-to-beat cardiovascular control. *Science* 213(4504):220-222.
11. Bernardi L, *et al.* (1990) Evidence for an intrinsic mechanism regulating heart rate variability in the transplanted and the intact heart during submaximal dynamic exercise? *Cardiovasc Res* 24(12):969-981.
12. Yaniv Y, Lyashkov AE, & Lakatta EG (2013) The Fractal-like Complexity of Heart Rate Variability beyond Neurotransmitters and Autonomic Receptors: Signaling Intrinsic to Sinoatrial Node Pacemaker Cells. *Cardiol Pharmacol* 2(111).
13. Yaniv Y, *et al.* (2014) Synchronization of sinoatrial node pacemaker cell clocks and its autonomic modulation impart complexity to heart beating intervals. *Heart rhythm : the official journal of the Heart Rhythm Society* 11(7):1210-1219.
14. Barbuti A & DiFrancesco D (2014) The 'funny' side of sepsis. *J Physiol* 592(Pt 6):1171.
15. Gold N, *et al.* (2017) Real-time changepoint detection for noisy biological time series. *bioRxiv*.
16. Harry JD, Kappagoda CT, Linden RJ, & Snow HM (1971) Depression of the reflex tachycardia from the left atrial receptors by acidaemia. *The Journal of physiology* 218(2):465-475.
17. Frasch MG, Mansano R, Ross MG, Gagnon R, & Richardson BS (2008) Do repetitive umbilical cord occlusions (UCO) with worsening acidemia induce the Bezold-Jarisch reflex (BJR) in the ovine fetus near term? *Reproductive Sciences* 15(2):129A.
18. Nuyt AM, Segar JL, Holley AT, & Robillard JE (2001) Autonomic adjustments to severe hypotension in fetal and neonatal sheep. *Pediatric research* 49(1):56-62.
19. Nuwayhid B, Brinkman CR, 3rd, Su C, Bevan JA, & Assali NS (1975) Development of autonomic control of fetal circulation. *Am J Physiol* 228(2):337-344.
20. Yumoto Y, *et al.* (2005) Noninvasive measurement of isovolumetric contraction time during hypoxemia and acidemia: Fetal lamb validation as an index of cardiac contractility. *Early human development* 81(7):635-642.
21. Stamm C, *et al.* (2001) Rapid endotoxin-induced alterations in myocardial calcium handling: obligatory role of cardiac TNF-alpha. *Anesthesiology* 95(6):1396-1405.

22. Avlas O, Fallach R, Shainberg A, Porat E, & Hochhauser E (2011) Toll-like receptor 4 stimulation initiates an inflammatory response that decreases cardiomyocyte contractility. *Antioxidants & redox signaling* 15(7):1895-1909.
23. Romero R, *et al.* (2004) Fetal cardiac dysfunction in preterm premature rupture of membranes. *J Matern Fetal Neonatal Med* 16(3):146-157.
24. Tare M, *et al.* (2014) Exposure to intrauterine inflammation leads to impaired function and altered structure in the preterm heart of fetal sheep. *Clin Sci (Lond)* 127(9):559-569.
25. Polglase GR, *et al.* (2010) Intrauterine inflammation causes pulmonary hypertension and cardiovascular sequelae in preterm lambs. *J Appl Physiol (1985)* 108(6):1757-1765.
26. Velten M, *et al.* (2014) Adverse perinatal environment contributes to altered cardiac development and function. *Am J Physiol Heart Circ Physiol* 306(9):H1334-1340.
27. Kumar A, Haery C, & Parrillo JE (2001) Myocardial dysfunction in septic shock: Part I. Clinical manifestation of cardiovascular dysfunction. *Journal of cardiothoracic and vascular anesthesia* 15(3):364-376.
28. Kumar A, Krieger A, Symeoneides S, Kumar A, & Parrillo JE (2001) Myocardial dysfunction in septic shock: Part II. Role of cytokines and nitric oxide. *Journal of cardiothoracic and vascular anesthesia* 15(4):485-511.
29. Court O, Kumar A, Parrillo JE, & Kumar A (2002) Clinical review: Myocardial depression in sepsis and septic shock. *Critical care* 6(6):500-508.
30. Yanowitz TD, *et al.* (2002) Hemodynamic disturbances in premature infants born after chorioamnionitis: association with cord blood cytokine concentrations. *Pediatr Res* 51(3):310-316.
31. Garnier Y, Coumans AB, Jensen A, Hasaart TH, & Berger R (2003) Infection-related perinatal brain injury: the pathogenic role of impaired fetal cardiovascular control. *Journal of the Society for Gynecologic Investigation* 10(8):450-459.
32. Garite TJ (2001) Management of premature rupture of membranes. *Clinics in perinatology* 28(4):837-847.
33. Fahey JO (2008) Clinical management of intra-amniotic infection and chorioamnionitis: a review of the literature. *Journal of midwifery & women's health* 53(3):227-235.
34. Green LR, Kawagoe Y, Homan J, White SE, & Richardson BS (2001) Adaptation of cardiovascular responses to repetitive umbilical cord occlusion in the late gestation ovine fetus. *J Physiol* 535(Pt 3):879-888.
35. Rees S & Inder T (2005) Fetal and neonatal origins of altered brain development. *Early human development* 81(9):753-761.
36. van den Heuij LG, *et al.* (2014) Synergistic white matter protection with acute-on-chronic endotoxin and subsequent asphyxia in preterm fetal sheep. *Journal of neuroinflammation* 11:89.
37. Xu A, *et al.* (2014) Adaptive brain shut-down counteracts neuroinflammation in the near-term ovine fetus. *Frontiers in neurology* 5:110.
38. Webber CL, Jr. & Zbilut JP (1994) Dynamical assessment of physiological systems and states using recurrence plot strategies. *J Appl Physiol (1985)* 76(2):965-973.
39. Zbilut JP, Thomasson N, & Webber CL (2002) Recurrence quantification analysis as a tool for nonlinear exploration of nonstationary cardiac signals. *Med Eng Phys* 24(1):53-60.
40. Webber Jr CL & Marwan N (2015) *Recurrence quantification analysis* (Springer).
41. Roopaei M, Boostani R, Sarvestani RR, Taghavi MA, & Azimifar Z (2010) Chaotic based reconstructed phase space features for detecting ventricular fibrillation. *Biomedical Signal Processing and Control* 5(4):318-327.
42. Saigal S & Doyle LW (2008) An overview of mortality and sequelae of preterm birth from infancy to adulthood. *Lancet* 371(9608):261-269.
43. Lodygensky GA, Battin MR, & Gunn AJ (2017) Mild Neonatal Encephalopathy-How, When, and How Much to Treat? *JAMA Pediatr*.

44. Brain KL, *et al.* (2015) Induction of controlled hypoxic pregnancy in large mammalian species. *Physiological reports* 3(12).
45. Durosier LD, *et al.* (2014) Sampling rate of heart rate variability impacts the ability to detect acidemia in ovine fetuses near-term. *Frontiers in pediatrics* 2:38.
46. Niu Y, Herrera EA, Evans RD, & Giussani DA (2013) Antioxidant treatment improves neonatal survival and prevents impaired cardiac function at adulthood following neonatal glucocorticoid therapy. *J Physiol* 591(20):5083-5093.

**Figure legends**

**Figure 1.** Effects of chronic hypoxia during pregnancy on fetal intrinsic heart rate variability (iHRV). Values are mean ± SEM. Groups are normoxic (N, n=6) and hypoxic (H, n=9). Significant differences are: * vs. N, P<0.05 (Student's t test for unpaired data).

**Figure 2.** Correlation of left ventricular end-diastolic pressure (LVEDP) and the intrinsic heart rate variability (iHRV) measures dlmax and sgridAND. These measures are shown because, among the iHRV measures shown in Fig. 1, these two measures were identified as correlating to LVEDP in normoxic (empty circles) and hypoxic (black circles) groups.

**Figure 3.** A representative beat-to-beat time series, followed by the corresponding grid transformation AND similarity index (sgridAND) and the recurrence plots are shown for a normoxic (right) and hypoxic (left) fetus to demonstrate iHRV pattern differences revealed with such representation of the phase space organization of the beat-to-beat fluctuations.

**Figure 4. LEFT**: Experimental protocol for *ex vivo* analyses. **MIDDLE**: Isobaric hypoxic chambers and nitrogen-generating system.(44) **RIGHT**: Isolated heart perfusion model.(46)

**Figure 1.**

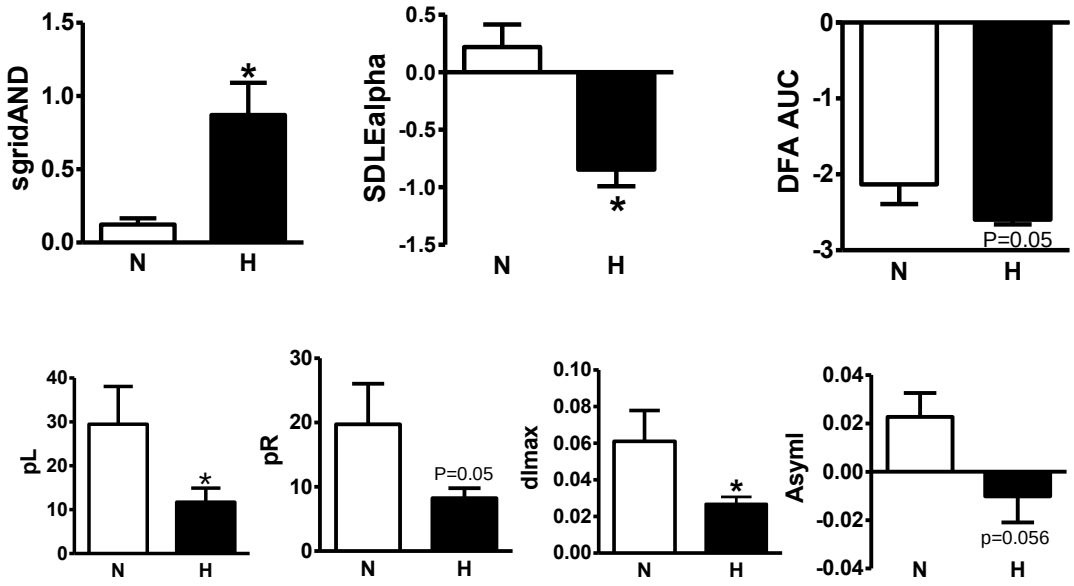
sgridAND
1.5
1.0
0.5
0.0
*
N
H
SDLEalpha
0.5
0.0
-0.5
-1.0
-1.5
*
N
H
DFA AUC
0
-1
-2
-3
P=0.05
N
H
pL
40
30
20
10
0
*
N
H
pR
30
20
10
0
P=0.05
N
H
dlmax
0.10
0.08
0.06
0.04
0.02
0.00
*
N
H
Asyml
0.04
0.02
0.00
-0.02
-0.04
p=0.056
N
H

**Figure 2.**

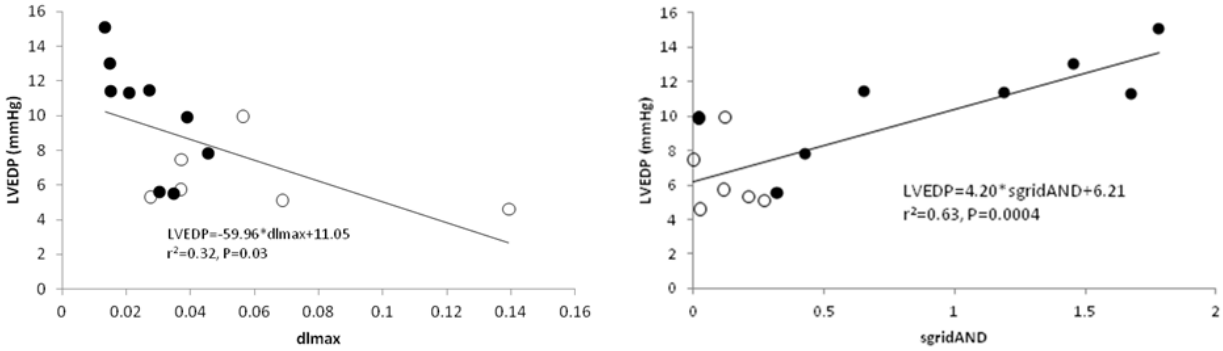
LVEDP (mmHg)
dlmax
LVEDP=-59.96*dlmax+11.05
r²=0.32, P=0.03
LVEDP (mmHg)
sgridAND
LVEDP=4.20*sgridAND+6.21
r²=0.63, P=0.0004

**Figure 3.**

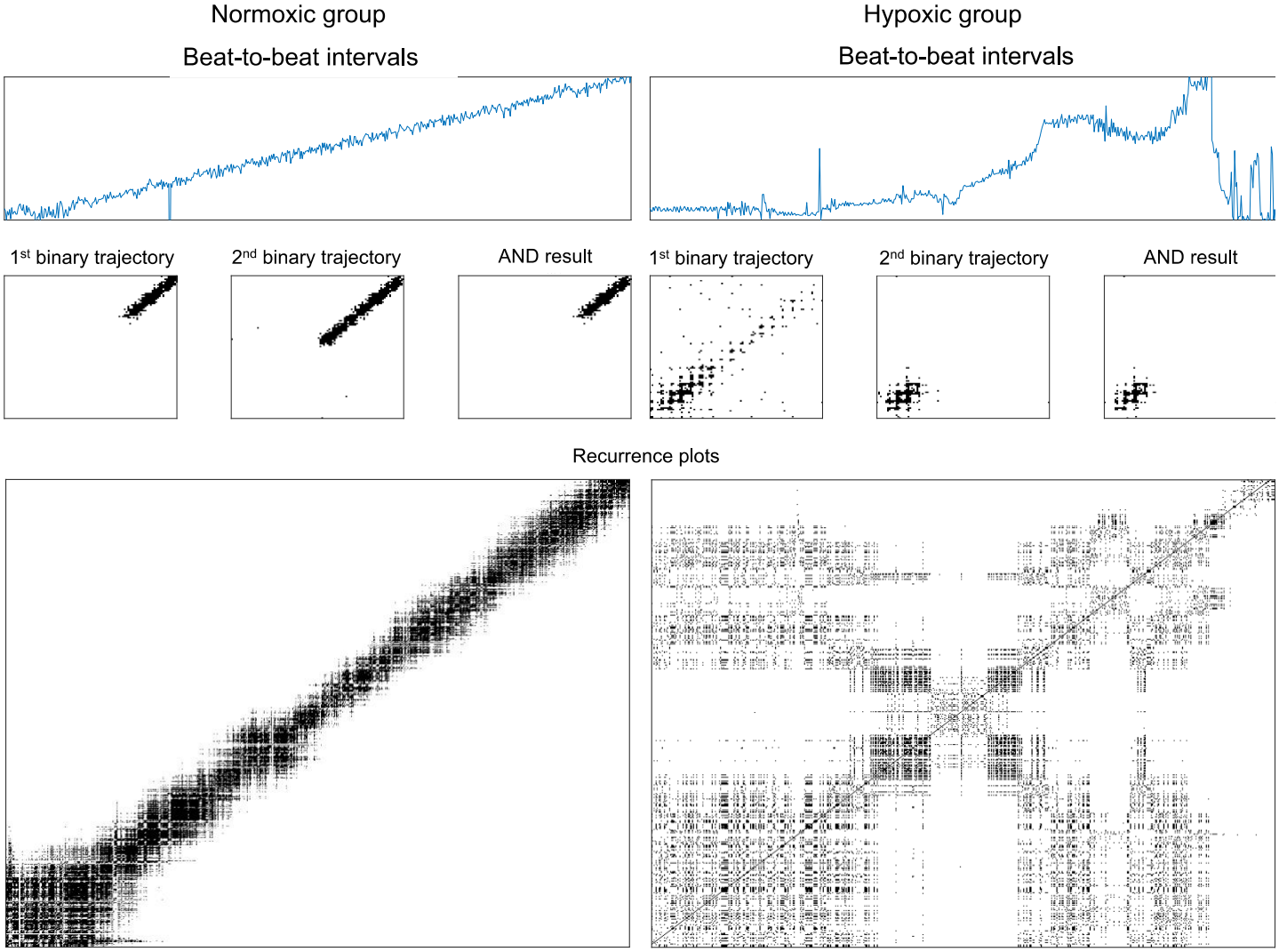
Normoxic group
Beat-to-beat intervals
Hypoxic group
Beat-to-beat intervals
1st binary trajectory
2nd binary trajectory
AND result
1st binary trajectory
2nd binary trajectory
AND result
Recurrence plots

**Figure 4.**

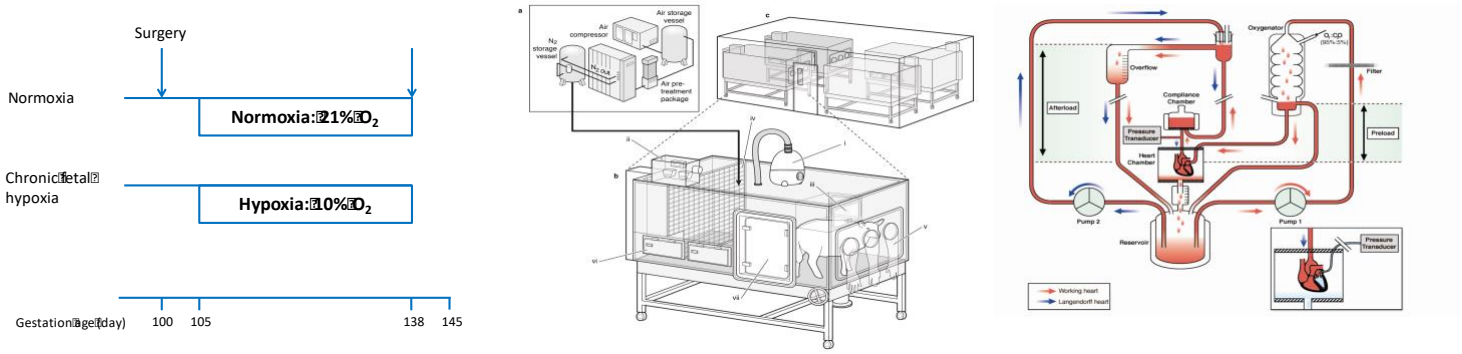
Surgery
Normoxia
Normoxia: 21% $O_2$
Chronic fetal hypoxia
Hypoxia: 10% $O_2$
Gestation age (day)
100
105
138
145
Air storage vessel
Air compressor
$N_2$ storage vessel
Air pre-treatment package
Oxygenator
Filter
Overflow
Compliance Chamber
Afterload
Preload
Pressure Transducer
Heart Chamber
Pump 2
Pump 1
Reservoir
Working heart
Langendorff heart