# Frequent variants in the Japanese population determine quasi-Mendelian inheritance of rare retinal ciliopathy

Konstantinos Nikopoulos,[1,‡] Katarina Cisarova,[1,‡] Hanna Koskiniemi-Kuending,[1] Noriko Miyake,[2] Pietro Farinelli,[1] Mathieu Quinodoz,[1] Muhammad Imran Khan,[3,4] Andrea Prunotto,[1] Masato Akiyama,[5] Yoichiro Kamatani,[5] Chikashi Terao,[5] Fuyuki Miya,[6] Yasuhiro Ikeda,[7] Shinji Ueno,[8] Nobuo Fuse,[9] Akira Murakami,[10] Hiroko Terasaki,[8] Koh-Hei Sonoda,[7] Tatsuro Ishibashi,[7] Michiaki Kubo,[11] Frans P. M. Cremers,[3,4] Naomichi Matsumoto,[2] Koji M. Nishiguchi,[12,13] Toru Nakazawa,[12,13] and Carlo Rivolta[1,14]*

*correspondence (carlo.rivolta@unil.ch)
[‡]equal contribution

[1]Department of Computational Biology, Unit of Medical Genetics, University of Lausanne, Lausanne, Switzerland
[2]Department of Human Genetics, Yokohama City University Graduate School of Medicine, Yokohama, Japan
[3]Department of Human Genetics, Radboud University Medical Center, Nijmegen, the Netherlands
[4]Donders Institute for Brain, Cognition and Behaviour, Radboud University Nijmegen, The Netherlands
[5]Laboratory for Statistical Analysis, RIKEN Center for Integrative Medical Sciences, Yokohama, Japan
[6]Department of Medical Science Mathematics, Medical Research Institute, Tokyo Medical and Dental University, Tokyo, Japan
[7]Department of Ophthalmology, Graduate School of Medical Sciences, Kyushu University, Fukuoka, Japan
[8]Department of Ophthalmology, Nagoya University Graduate School of Medicine, Nagoya, Japan
[9]Department of Integrative Genomics, Tohoku Medical Megabank Organization, Sendai, Japan
[10]Department of Ophthalmology, Juntendo University School of Medicine, Tokyo, Japan
[11]RIKEN Center for Integrative Medical Sciences, Yokohama, Japan
[12]Department of Ophthalmology, Tohoku University Graduate School of Medicine, Sendai, Japan
[13]Department of Advanced Ophthalmic Medicine, Tohoku University Graduate School of Medicine, Sendai, Japan
[14]Department of Genetics and Genome Biology, University of Leicester, Leicester, United Kingdom

## ABSTRACT

**Hereditary retinal degenerations (HRDs) are rare diseases leading to progressive visual impairment and blindness. They are generally transmitted as monogenic traits, obeying Mendel's laws of inheritance, and affect indiscriminately individuals from all ethnic groups. However, compared to other populations, Japanese display a unique landscape of HRD mutations. Following the genomic screening of 331 unrelated Japanese patients, we identified two alleles in the ciliary gene *RP1* that were enriched in patients but were also relatively prevalent in the general population. The first was determined by the insertion of an *Alu* element in the coding sequence of the gene (allele frequency in the Japanese population = 0.1%), while the other was a nonsense variant in the same exon (p.Arg1933*). This latter nonsense was found to be almost polymorphic in Japan (allele frequency = 0.6%), did not cause disease in homozygosis or heterozygosis, but was considerably enriched in HRD patients (allele frequency = 2.1%, i.e. a 3.5-fold enrichment; *p*-value = $1.29 \times 10^{-6}$). Interestingly, family and population analyses showed that p.Arg1933* could act as a Mendelian mutation, *in trans* with other pathogenic variants, but also cause disease in conjunction with hypomorphic or recessive alleles in ciliary genes elsewhere in the genome, according to an oligogenic pattern of inheritance. Our data corroborate the model of mutational load for ciliopathy, not only for a selected group of families, but at a population-wide level. In addition, our results suggest that rare conditions such as HRDs can be paradoxically determined by relatively common variants, following a quasi-Mendelian model that could fill the gap that currently exists between monogenic and complex diseases.**

## MAIN TEXT

Together with intellectual disabilities, hereditary retinal degenerations (HRDs, comprising retinitis pigmentosa and allied diseases) represent a group of conditions for which both genetic and allelic heterogeneity is the highest in humans[1,2]. To date, almost 300 genes and thousands of mutations have been identified as causative of HRD, and the detection of novel disease genes and variants continues at a steady pace[3]. Considering that the overall prevalence of HRDs does not exceed 1 in 2,000 individuals, the average contribution of any given HRD gene to the disease is incredibly small. Similarly, apart from two DNA variants that appear to be relatively frequent in the general population and determine a specific form of the disease[4,5], the largest majority of mutations are so rare that are seldom detected in more than one pedigree, worldwide. In addition, although HRDs affect people from the five continents, their specific allelic assortment seems to be population-specific[6,7]. For instance, similar to other islanders or groups of people that have experienced relative historical isolation, Japanese carry certain alleles, including pathogenic ones, which are not found elsewhere in the world[8]. Furthermore, lack of significant reduction in fitness before the reproductive age, associated with such an elevated heterogeneity, have led to the consequence that the number of recessive mutations that are detected heterozygously in the general, unaffected population is remarkably high and may affect up to one person in two[9].

Despite such an extraordinary variability and abundance of mutations, HRD is almost invariantly inherited as a monogenic, Mendelian trait, for which the presence of only one (dominant) or two (recessive) mutations in the same gene, genome-wide, is at the same time a necessary and sufficient condition for pathogenicity[10]. At the other end of the spectrum of ocular conditions having a genetic component lies age-related macular degeneration (AMD),

another retinal disease affecting people aged 50 and over. AMD is a *bona fide* complex disease with a relatively high prevalence (1 in 13 individuals), favored by the presence of polymorphic SNPs, highly-penetrant rare variants, and environmental factors[11]. Between these two pillars of inheritance, there is an intermediate zone, consisting in a few examples for which extremely rare mutations in more than one gene are associated with Bardet-Biedl syndrome, a retinal ciliopathy displaying sometimes digenic triallelic inheritance[12-14].

*RP1* is one of the several HRD genes identified to date, and one of the few causing disease by more than one Mendelian pattern of inheritance. Originally described as linked to autosomal dominant retinitis pigmentosa (adRP)[15-17], a subtype of HRD, it was later shown to be associated with a recessive form of the same disease (arRP)[18]. To date, at least 60 mutations have been reported in *RP1*, most of which cluster within its last exon (exon 4), cumulatively accounting approximately for 5.5% and up to 4.5% of all adRP and arRP cases, respectively[19,20]. However, some DNA variants in the far 3' end of the gene, including nonsense variants, appear not to cause disease, at least not according to a dominant or recessive pattern of inheritance[21,22]. *RP1* encodes a multi-modular protein of 2156 amino acids, which is a member of the doublecortin family and it is present in the ciliary axoneme of both rods and cones, the light-sensing neurons of the retina[23,24]. Mutations in *RP1* thus determine visual loss as a consequence of a ciliopathic phenotype affecting these specialized cell types.

In the framework of a Whole-Genome Sequencing screening effort of Japanese patients, we identified a novel, unusual mutation consisting in the insertion of a mobile *Alu* element in exon 4 of the *RP1* gene in a male individual. This insertion caused the disruption of the reading frame by introducing 328 additional nucleotides and a premature termination codon in the canonical *RP1* coding sequence. Heterozygous parents of this proband were not

affected, in support of the notion that the c.4052_4053ins328/p.Tyr1352Alafs*9 (*RP1*: NM_006269.1) is indeed a recessive allele (Fig. 1a). Subsequently, targeted screening for the *Alu* element insertion (c.4052_4053ins328/p.Tyr1352Alafs*9) in additional 220 and 330 European and Japanese patients, respectively, as well as in 524 Japanese controls, allowed identifying 15 other affected Japanese individuals and one heterozygous Japanese control carrying this insertion. In total, six patients were homozygous for the mutation (12 alleles), which co-segregated with the disease as a classical Mendelian, recessive allele (not shown), while 10 carried it heterozygously. Altogether, these findings indicate that this *Alu* insertion is not only clearly pathogenic [*p*-value = $1.66 \times 10^{-8}$, by Chi-square (1,047:1 vs. 640:22; wt alleles in controls:mutations in controls vs. wt alleles in patients:mutations in patients, all Japanese)], but it is also a rather prevalent cause of retinal degeneration within the Japanese islands, possibly second only to the most frequent mutation so far identified in this country, i.e. c.4957dupA in *EYS*[25-27].

Remarkably, 6 of the 10 individuals who carried the *Alu* insertion heterozygously were in fact compound heterozygotes for either of two other changes in *RP1*: a novel frameshift mutation (c.4196delG/p.Cys1399LeufsX5, two individuals) and a nonsense variant c.5797C>T/p.Arg1933* (four individuals) that was previously identified in the general population and is present in dbSNP as entry # rs118031911. Again, both variants co-segregated with the disease within their respective families, according to an autosomal recessive pattern of inheritance (Fig. 1bcd).

Frameshift c.4196delG/p.Cys1399Leufs*5 was absent from 3,480 Japanese control chromosomes and was reported in the ExAC database to have an allele frequency of $8.29 \times 10^{-6}$, indicating that this DNA variant is a very rare allele, as it is the case of most HRD mutations.

In contrast, the rs118031911/T allele, despite being virtually absent in many world populations, was found to be relatively frequent in East Asians (Fig.2). In particular, our direct screening of 12,379 Japanese individuals with no retinal degeneration showed the presence of rs118031911/T in 145 subjects, 142 heterozygotes and 3 homozygotes (148 alleles), validating the notion that this DNA variant is in fact almost polymorphic in Japan (allele frequency = 0.6%). We evaluated clinically one of the three homozygotes (the only one who could be re-assessed, in agreement with our Institutional Review Boards protocol) by a very thorough ophthalmological examination. At age 28 y.o., she had no visual symptoms and displayed no ocular abnormalities: she had normal visual acuity (20/20 in both eyes), intact visual field (Goldmann perimetry), and no evidence of retinal degeneration through slit lamp examination and fundoscopy. Furthermore, optical coherence tomography imaging used to assess detailed retinal structures showed no sign of retinal thinning and electroretinogram, a test allowing objective detection of minimal retinal dysfunction even in the absence of subjective symptoms, showed normal responses. In addition, absence of late-onset HRD, who could have escaped detection in a 28 y.o. individual, was confirmed by fundus imaging of the other two rs118031911/T homozygotes, who displayed no signs of retinal degeneration at ages of 78 and 79 years, respectively. Altogether, both population based-data and direct clinical assessments confirm that rs118031911/T does not cause *per se* HRD, in heterozygosis or in homozygosis.

However, specific screening for the rs118031911/T allele in the same cohort of 331 HRD patients mentioned above led to the identification of 10 additional heterozygotes (14 alleles in total) showing that its frequency in HRD patients was 2.1% (14 alleles out of 662) (Fig. 2). The 3.5-fold enrichment of rs118031911/T in patients vs. controls (148 alleles out of 24,758 = 0.6%) was highly significant [*p*-value = $1.29 \times 10^{-6}$, by Chi-square (24,610:148 vs.

648:14)], indicating that this relatively common variant has in fact an effect on retinal health. Considering that rs118031911/T introduces a nonsense codon in the *RP1* open reading frame and was found *in trans* with respect to the *Alu* insertion in some patients, it is not unlikely that it could represent a hypomorphic variant contributing to the mutational load of genes involved in retinal homeostasis. In other words, despite being benign when considered as a Mendelian allele (monoallelically or biallelically), rs118031911/T could exert a pathogenic function in conjunction with DNA changes in other genes, according to an oligogenic pattern of inheritance that was previously modeled for hereditary ciliopathies[28-30].

We tested this hypothesis by assessing the mutational load of 64 genes involved in retinal ciliopathy, selected as the intersection between the SYSCILIA[31] and the RetNet[3] databases (Supplementary Methods, Supplementary Table 1). Specifically, we preformed Whole-Exome Sequencing (WES) in 9 of the 10 patients carrying rs118031911/T heterozygously (test group) and compared their genotypes with those from 144 unrelated Japanese individuals with HRD, sequenced in the same batch as the 9 individuals mentioned above and analyzed by the same bioinformatic pipeline (control group). To ensure biological and statistical consistency, we analyzed only DNA variants having an allele frequency compatible with that of HRD variants, as observed up to now (i.e. between 0 and 1% in the Japanese population) and considered only subjects from the control group who had at least one of such variants (141 people out of 144), to counterbalance the presence of rs118031911/T in all individuals from the test group. Comparison of the two groups by a standard burden test showed an increased load of rare variants in ciliary genes in carriers of rs118031911/T vs. other HRD patients (5.89 vs. 3.67 variants per individual, respectively, or a 1.6-fold enrichment) with a significant associated *p*-value ($1.60 \times 10^{-2}$, by permutation test, on 100,000 random simulations). To confirm that the increased mutational burden was specific

to retinal ciliary genes, we scored the differential mutational load in the test vs. the control group in 100,000 sets of 64 genes, randomly chosen. This analysis showed indeed a statistically significant bias for genes involved in retinal ciliopathies over the rest of the genome (*p*-value = $2.34 \times 10^{-3}$).

The same burden analysis was then repeated by using a replication control cohort composed of additional 75 Japanese individuals with HRD, who were randomly chosen from another group of patients. The genotypes from these subjects, as well as from the 10 cases carrying rs118031911/T, were ascertained by a different methodology, based on the targeted sequencing of target genes (Supplementary Methods). Again, enrichment of rare variants within the 26 retinal ciliary genes that were present in this different sequencing panel was significant in the test group vs. the control group and was very similar to the one detected in the WES cohorts (3.00 vs. 1.63 variants per individual, respectively, or 1.84-fold enrichment; p-value = $2.06 \times 10^{-2}$ by permutation test, on 100,000 random simulations).

Altogether, these results indicate that the rs118031911/T nonsense likely acts in concert with other hypomorphic DNA ciliary changes to determine a pathological phenotype, and that such changes represent a higher load of rare variants with respect to that carried by HRD patients, who generally inherit the disease as a Mendelian trait. These additional DNA changes seemed to touch preferentially a sub-set of ciliary genes (27 out of 64), encoding for structural proteins and often associated with syndromic ciliopathies, such as for instance *C8orf37*[32], *MKS1*[33], *TCC8*[34], etc. (Fig. 3, Supplementary Table 2). The reasons for this specific pattern of variations does not seem to be immediately clear, at least at the moment, and may be due to the fact that the role of most of these proteins is still largely unknown.

The extreme genetic heterogeneity of retinal degenerations, together with the elevated number of pathogenic and hypomorphic changes in HRD genes that are detected in

the unaffected population, have evoked the theoretical possibility that quasi-Mendelian inheritance could be responsible for these conditions[10]. Digenic heredity has been clearly demonstrated for specific combinations of mutations[35-37] in particular pedigrees or in individual cases, including digenic triallelic transmission of Bardet-Biedl syndrome [12,38]. For these patients, the presence of two (diallelic) or three (triallelic) mutations at two different loci (digenism) causes disease, presumably by compromising the overall function of gene products that belong to the same complex or are part of the same biochemical pathway. This model seems to be particularly true for genes encoding for proteins that form or play a role within the cell primary cilium, according to the paradigm of "mutational load" put forward by N. Katsanis and coworkers[39]. In these instances, accumulation of rare variants (which individually may have a little effect) in multiple ciliary genes can produce a pathological phenotype that is connected to ciliary function and result in a "ciliopathy", including retinal ciliopathies[40-42].

In this work we show that two specific *RP1* alleles are responsible for a relatively large number of HRD cases in Japan. Interestingly, none of these two changes is a rare allele at all, compared to the average frequencies of classical HRD mutations. The first, the c.4052_4053ins328/p.Tyr1352Alafs*9 *Alu* element insertion in *RP1*, seems to be the second most common HRD recessive mutation described so far in Japan, and its frequency may even be underestimated, since insertional events of mobile elements are difficult to detect by conventional screening techniques. The second variant, c.5797C>T/p.Arg1933* or rs118031911/T, is even more frequent, and by far more interesting. Despite introducing a premature stop codon in the *RP1* open reading frame, this DNA change is almost polymorphic in East Asia and does not cause disease either in heterozygous or homozygous carriers. However, this same change may act as pathogenic allele in conjunction with rare variants in

other HRD genes, according to a non-Mendelian, oligogenic pattern of inheritance. Although we currently ignore the molecular mechanisms leading to this unusual model of pathogenicity, it is probably the consequence of an increased global mutational load with threshold effect, determined by the accumulation of variants with different pathogenic potential. The presence of one or of two rs118031911/T alleles likely produces a load that is below this pathological threshold, while the co-occurrence of extra variants could result in the crossing of such a limit for normal retinal homeostasis. This hypothesis is supported by the evidence that rs118031911/T may be pathogenic in conjunction with just one very severe mutation, such as for instance the insertion of the *Alu* element in *RP1* mentioned above, which completely ablates the open reading frame of the gene.

In conclusion, it seems that, at least for *RP1*-associated HRD, disorders displaying a Mendelian pattern of inheritance may also genetically behave like multigenic conditions, for which both polymorphic (having a low effect) and rare (having a rather high effect) variants can determine pathogenesis (Fig. 4). Furthermore, our findings suggest that oligogenic heredity of human diseases (and perhaps of other characters) may not be limited to a low number of cases with hyper-rare conditions, as shown up to now[43-45], but could extend to more frequent phenotypes and represent a bridge between monogenic and complex inheritance.

## ACKNOWLEDGEMENTS

This work was supported by the following agencies. The Swiss National Science Foundation (grant # 156260, to C.R.); the Rotterdamse Stichting Blindenbelangen, the Stichting voor Ooglijders and the Nelly Reef fund (to M.I.K. and F.P.M.C.); the Japan Agency for Medical Research and Development (grant #17ek0109213h0001) and the Japan Society for the Promotion of Science (grant #16K11315, to K.M.N.); Research on Measures for Intractable Diseases, Comprehensive Research on Disability Health and Welfare, the Strategic Research Program for Brain Science, and the Initiative on Rare and Undiagnosed Diseases (all to N.Ma.); the Japanese Agency for Medical Research and Development, Grants-in-Aid for Scientific Research (to N.Ma. and N.Mi.); the BioBank Japan Project, by the Japanese Ministry of Education, Culture, Sport, Science and Technology and the Japanese Agency for Medical Research and Development (to M.K.).

## REFERENCES


1. den Hollander, A.I., Black, A., Bennett, J. & Cremers, F.P. Lighting a candle in the dark: advances in genetics and gene therapy of recessive retinal dystrophies. *J Clin Invest* **120**, 3042-53 (2010).
2. Berger, W., Kloeckener-Gruissem, B. & Neidhardt, J. The molecular basis of human retinal and vitreoretinal diseases. *Prog Retin Eye Res* **29**, 335-75 (2010).
3. http://www.sph.uth.tmc.edu/RetNet/disease.htm.
4. Cremers, F.P.M. Pers. Comm.
5. Zernant, J. *et al.* Frequent hypomorphic alleles account for a significant fraction of ABCA4 disease and distinguish it from age-related macular degeneration. *J Med Genet* **54**, 404-412 (2017).
6. Jin, Z.B. *et al.* Identifying pathogenic genetic background of simplex or multiplex retinitis pigmentosa patients: a large scale mutation screening study. *J Med Genet* **45**, 465-72 (2008).
7. Khan, M.I. *et al.* The molecular basis of retinal dystrophies in pakistan. *Genes (Basel)* **5**, 176-95 (2014).
8. Yamaguchi-Kabata, Y. *et al.* Japanese population structure, based on SNP genotypes from 7003 individuals compared to other ethnic groups: effects on population-based association studies. *Am J Hum Genet* **83**, 445-56 (2008).
9. Nishiguchi, K.M. & Rivolta, C. Genes associated with retinitis pigmentosa and allied diseases are frequently mutated in the general population. *PLoS One* **7**, e41902 (2012).

10. Rivolta, C., Sharon, D., DeAngelis, M.M. & Dryja, T.P. Retinitis pigmentosa and allied diseases: numerous diseases, genes, and inheritance patterns. *Hum Mol Genet* **11**, 1219-1227 (2002).

11. den Hollander, A.I. & de Jong, E.K. Highly penetrant alleles in age-related macular degeneration. *Cold Spring Harb Perspect Med* **5**, a017202 (2014).

12. Katsanis, N. *et al.* Triallelic inheritance in Bardet-Biedl syndrome, a Mendelian recessive disorder. *Science* **293**, 2256-9 (2001).

13. Katsanis, N. The continuum of causality in human genetic disorders. *Genome Biol* **17**, 233 (2016).

14. Badano, J.L. & Katsanis, N. Beyond Mendel: an evolving view of human genetic disease transmission. *Nat Rev Genet* **3**, 779-789 (2002).

15. Pierce, E.A. *et al.* Mutations in a gene encoding a new oxygen-regulated photoreceptor protein cause dominant retinitis pigmentosa. *Nat Genet* **22**, 248-54 (1999).

16. Guillonneau, X. *et al.* A nonsense mutation in a novel gene is associated with retinitis pigmentosa in a family linked to the RP1 locus. *Hum Mol Genet* **8**, 1541-6 (1999).

17. Sullivan, L.S. *et al.* Mutations in a novel retina-specific gene cause autosomal dominant retinitis pigmentosa. *Nat Genet* **22**, 255-9 (1999).

18. Khaliq, S. *et al.* Novel association of RP1 gene mutations with autosomal recessive retinitis pigmentosa. *J Med Genet* **42**, 436-8 (2005).

19. Avila-Fernandez, A. *et al.* Identification of an RP1 prevalent founder mutation and related phenotype in Spanish patients with early-onset autosomal recessive retinitis. *Ophthalmology* **119**, 2616-21 (2012).

20. El Shamieh, S. *et al.* Targeted next generation sequencing identifies novel mutations in RP1 as a relatively common cause of autosomal recessive rod-cone dystrophy. *Biomed Res Int* **2015**, 485624 (2015).

21. Baum, L. *et al.* RP1 in Chinese: Eight novel variants and evidence that truncation of the extreme C-terminal does not cause retinitis pigmentosa. *Hum Mutat* **17**, 436 (2001).

22. Ziviello, C. *et al.* Molecular genetics of autosomal dominant retinitis pigmentosa (ADRP): a comprehensive study of 43 Italian families. *J Med Genet* **42**, e47 (2005).

23. Liu, Q. *et al.* Identification and subcellular localization of the RP1 protein in human and mouse photoreceptors. *Invest Ophthalmol Vis Sci* **43**, 22-32 (2002).

24. Liu, Q., Zuo, J. & Pierce, E.A. The retinitis pigmentosa 1 protein is a photoreceptor microtubule-associated protein. *J Neurosci* **24**, 6427-36 (2004).

25. Iwanami, M., Oshikawa, M., Nishida, T., Nakadomari, S. & Kato, S. High prevalence of mutations in the EYS gene in Japanese patients with autosomal recessive retinitis pigmentosa. *Invest Ophthalmol Vis Sci* **53**, 1033-40 (2012).

26. Suto, K. *et al.* Clinical phenotype in ten unrelated Japanese patients with mutations in the EYS gene. *Ophthalmic Genet* **35**, 25-34 (2014).

27. Arai, Y. *et al.* Retinitis Pigmentosa with EYS Mutations Is the Most Prevalent Inherited Retinal Dystrophy in Japanese Populations. *J Ophthalmol* **2015**, 819760 (2015).

28. Hildebrandt, F., Benzing, T. & Katsanis, N. Ciliopathies. *N Engl J Med* **364**, 1533-43 (2011).

29. Badano, J.L. *et al.* Dissection of epistasis in oligogenic Bardet-Biedl syndrome. *Nature* **439**, 326-30 (2006).

30. Lindstrand, A. *et al.* Copy-Number Variation Contributes to the Mutational Load of Bardet-Biedl Syndrome. *Am J Hum Genet* **99**, 318-36 (2016).

31. van Dam, T.J. *et al.* The SYSCILIA gold standard (SCGSv1) of known ciliary components and its applications within a systems biology consortium. *Cilia* **2**, 7 (2013).

32. Heon, E. *et al.* Mutations in C8ORF37 cause Bardet Biedl syndrome (BBS21). *Hum Mol Genet* **25**, 2283-2294 (2016).

33. Kyttala, M. *et al.* MKS1, encoding a component of the flagellar apparatus basal body proteome, is mutated in Meckel syndrome. *Nat Genet* **38**, 155-7 (2006).

34. Ansley, S.J. *et al.* Basal body dysfunction is a likely cause of pleiotropic Bardet-Biedl syndrome. *Nature* **425**, 628-33 (2003).

35. Ebermann, I. *et al.* PDZD7 is a modifier of retinal disease and a contributor to digenic Usher syndrome. *J Clin Invest* **120**, 1812-23 (2010).

36. Kajiwara, K., Berson, E.L. & Dryja, T.P. Digenic retinitis pigmentosa due to mutations at the unlinked peripherin/RDS and ROM1 loci. *Science* **264**, 1604-8 (1994).

37. Yoshimura, H. *et al.* Massively parallel DNA sequencing facilitates diagnosis of patients with Usher syndrome type 1. *PLoS One* **9**, e90688 (2014).

38. Beales, P.L. *et al.* Genetic interaction of BBS1 mutations with alleles at other BBS loci can result in non-Mendelian Bardet-Biedl syndrome. *Am J Hum Genet* **72**, 1187-99 (2003).

39. Zaghloul, N.A. & Katsanis, N. Functional modules, mutational load and human genetic disease. *Trends Genet* **26**, 168-76 (2010).

40. Tory, K. *et al.* High NPHP1 and NPHP6 mutation rate in patients with Joubert syndrome and nephronophthisis: potential epistatic effect of NPHP6 and AHI1 mutations in patients with NPHP1 mutations. *J Am Soc Nephrol* **18**, 1566-75 (2007).

41. Leitch, C.C. *et al.* Hypomorphic mutations in syndromic encephalocele genes are associated with Bardet-Biedl syndrome. *Nat Genet* **40**, 443-8 (2008).

42. Louie, C.M. *et al.* AHI1 is required for photoreceptor outer segment development and is a modifier for retinal degeneration in nephronophthisis. *Nat Genet* **42**, 175-80 (2010).

43. Priest, J.R. *et al.* De Novo and Rare Variants at Multiple Loci Support the Oligogenic Origins of Atrioventricular Septal Heart Defects. *PLoS Genet* **12**, e1005963 (2016).

44. Sykiotis, G.P. *et al.* Oligogenic basis of isolated gonadotropin-releasing hormone deficiency. *Proc Natl Acad Sci U S A* **107**, 15140-4 (2010).

45. Katsanis, N. The oligogenic properties of Bardet-Biedl syndrome. *Hum Mol Genet* **13 Spec No 1**, R65-71 (2004).

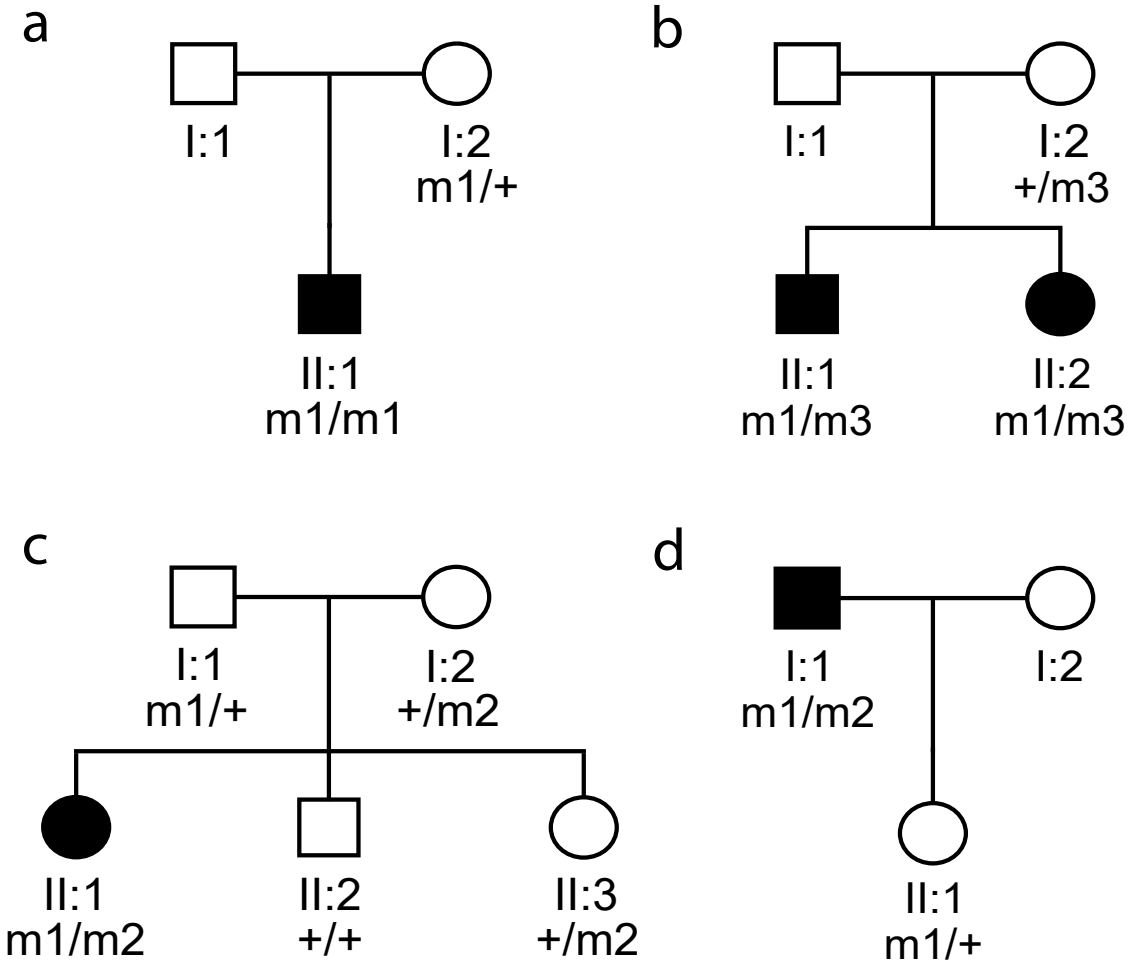


m1: c.4052_4053ins328/p.Tyr1352Alafs*9
m2: c.5797C>T/p.Arg1933*
m3: c.4196delG/p.Cys1399Leufs*5

**Figure 1.** Pedigrees of representative families segregating different *RP1* mutations.

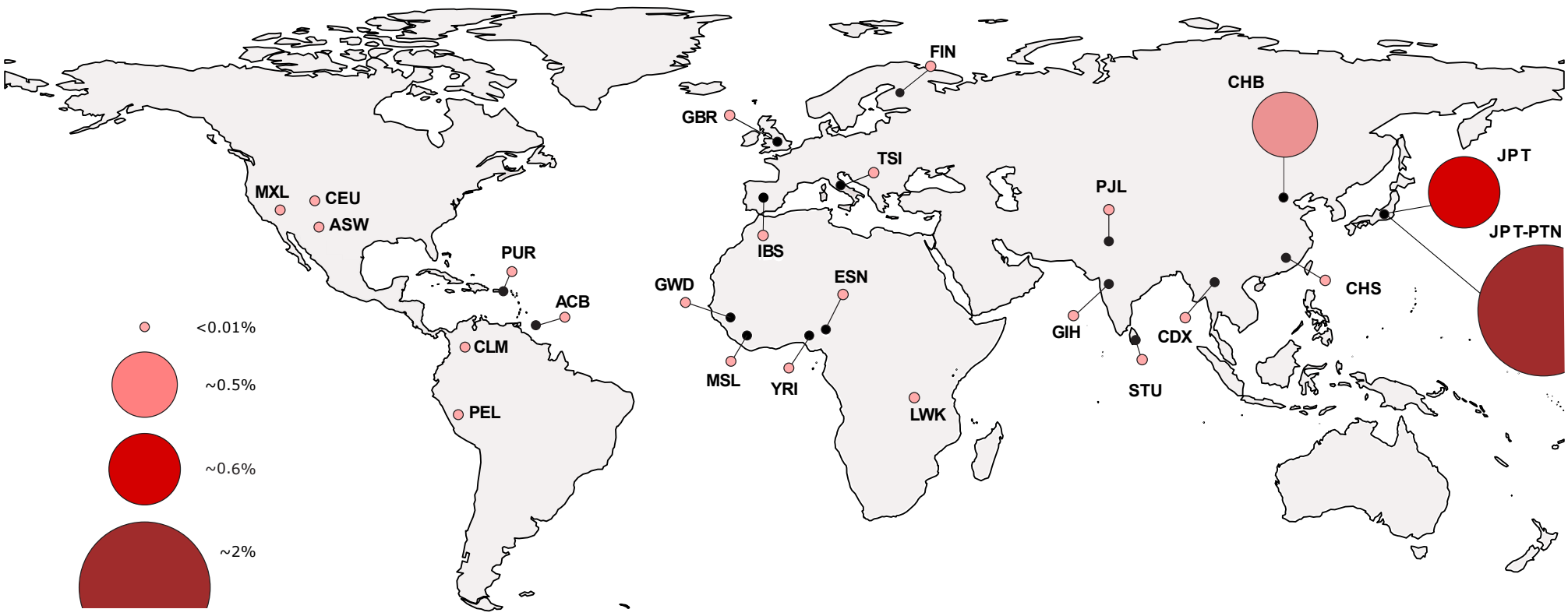


**Figure 2.** Frequency of the rs118031911/T allele across different world populations. ACB, African Caribbeans in Barbados; ASW, Americans of African Ancestry in South West USA; BEB, Bengali from Bangladesh; CDX, Chinese Dai in Xishuangbanna, China; CEU, Utah Residents (CEPH) with Northern and Western European Ancestry; CHB, Han Chinese in Bejing, China; CHS, Southern Han Chinese; CLM, Colombians from Medellin, Colombia; ESN, Esan in Nigeria; FIN, Finnish in Finland; GBR, British in England and Scotland; GIH, Gujarati Indian from Houston, Texas; GWD, Gambian in Western Divisions in the Gambia; IBS, Iberian Population in Spain; JPT, Japanese in Tokyo, Japan; JPT-PTN, Japanese HRD patients from our set; LWK, Luhya in Webuye, Kenya; MSL, Mende in Sierra Leone; MXL, Mexican Ancestry from Los Angeles USA; PEL, Peruvians from Lima, Peru; PJL, Punjabi from Lahore, Pakistan; PUR, Puerto Ricans from Puerto Rico; STU, Sri Lankan Tamil from the UK; TSI, Toscani in Italia; YRI, Yoruba in Ibadan, Nigeria;

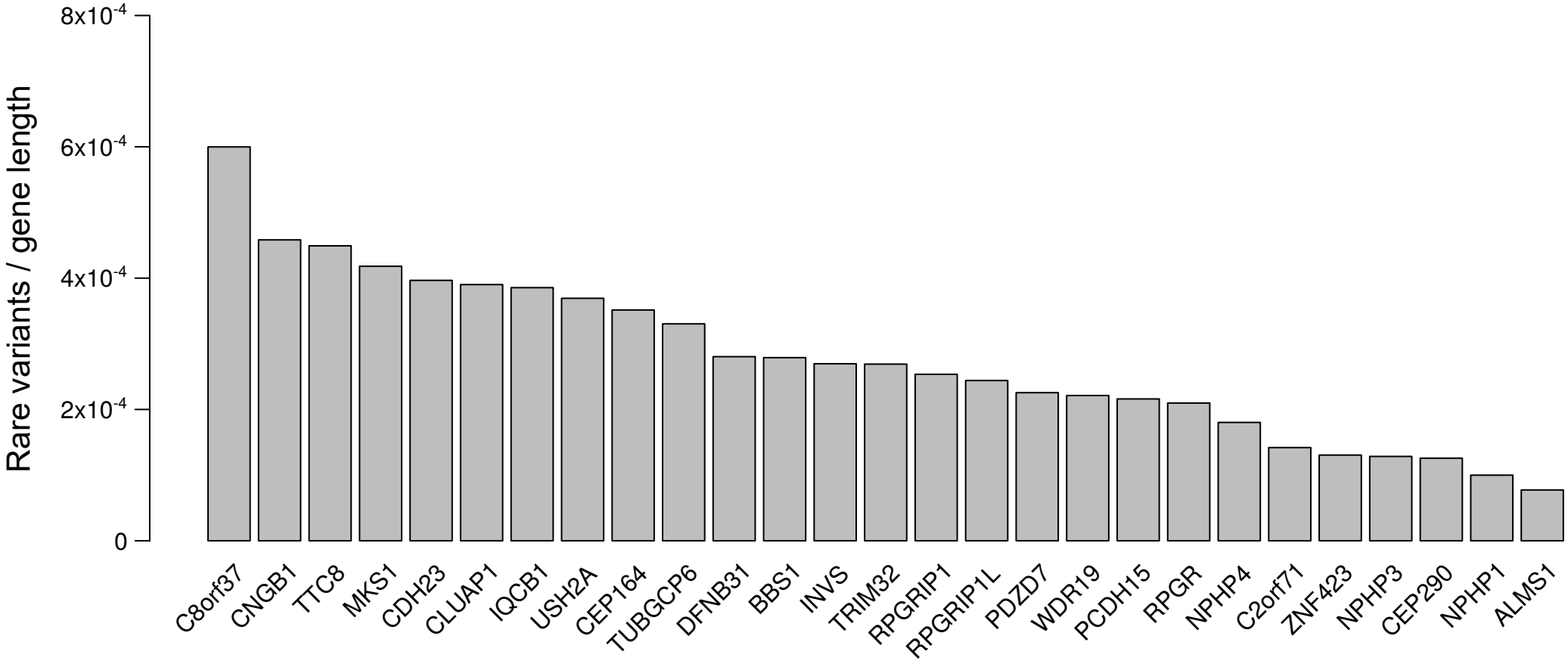


**Figure 3.** Ciliary genes found to carry rare/hypomorphic variants in patients with HRD and the *RP1* rs118031911/T allele vs. patients with HRD not carrying this allele. The frequency of rare variants present in each gene was corrected by the gene lengths.

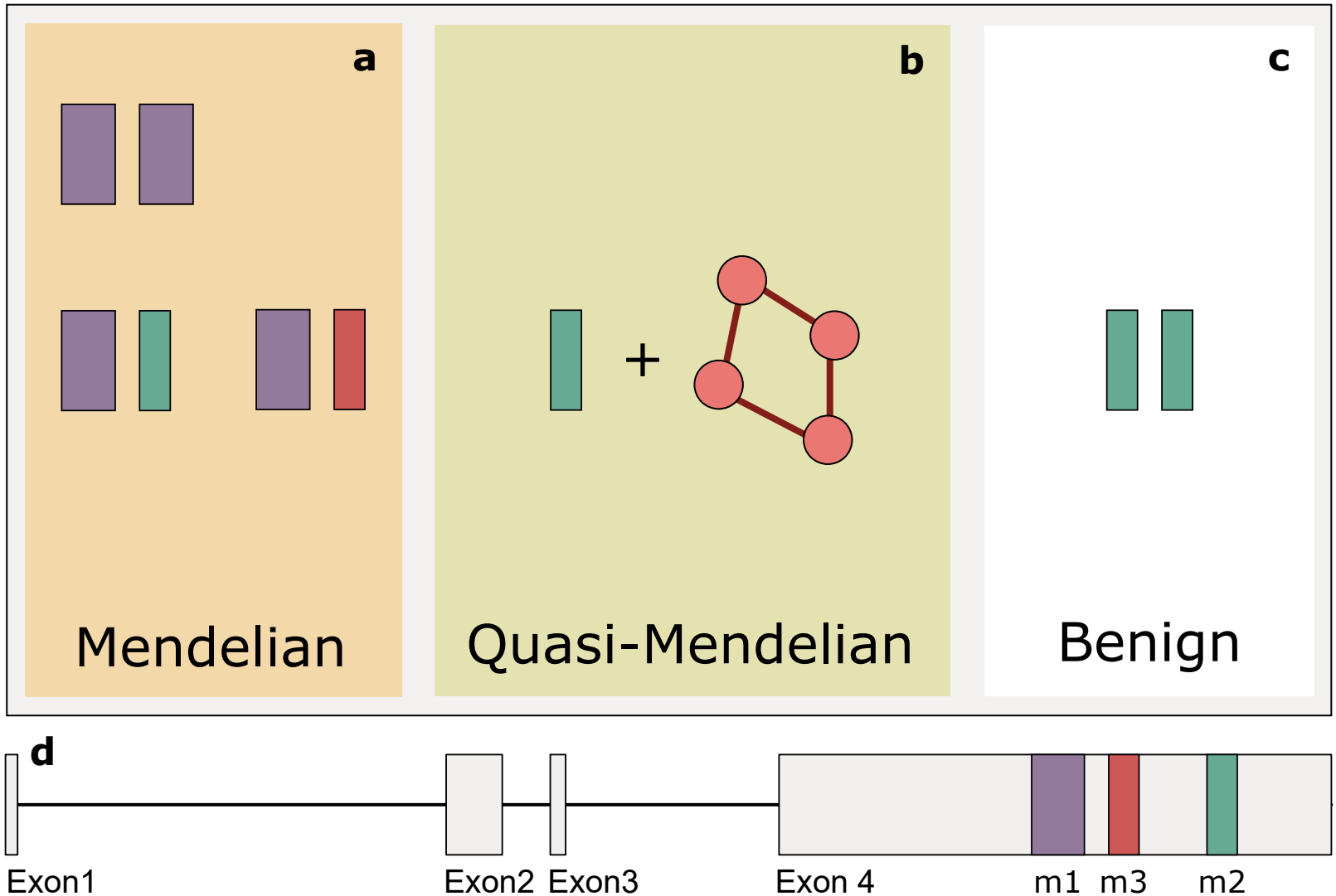


**Figure 4.** Schematic representation of the inheritance pattern of the identified mutations in *RP1*, highlighting the concept of rs118031911/T-mediated quasi Mendelian inheritance of HRDs. (a) Any combination of the *RP1 Alu* element insertion (m1, or c.4052_4053ins328/p.Tyr1352Alafs*9), in a homozygous state or in a compound heterozygous combination with rs118031911/T (m2, or c.5797C>T/p.Arg1933*) or m3 (c.4196delG/p.Cys1399LeufsX5) results in autosomal recessive inheritance of the disease. (b) Combinations of the hypomorphic m2 allele with additional hypomorphs and/or heterozygous recessive alleles in other ciliary genes (ciliary mutational load) results in disease following a quasi-Mendelian fashion, whereas (c) homozygosis for m2 has no pathological consequences. (d) Structure of *RP1*: exons are represented by boxes, connected by solid lines (introns). The relative positions of m1, m2, and m3 are also indicated.