Common practice tissue extraction in solvent does not reflect actual emission of a sex pheromone during courtship in a butterfly

Bertanne Visser[1], Ian A. N. Dublon[1,2], Stéphanie Heuskin[1], Florent Laval[1,3], Paul M. B. Bacquet[1], Georges Lognay[3], Caroline M. Nieberding[1]

[1] Evolutionary Ecology and Genetics group, Biodiversity Research Centre, Earth and Life Institute, Université catholique de Louvain, Louvain-la-Neuve, Belgium.
[2] Present address: Infrastrukturavdelningen, Swedish University of Agricultural Sciences, Box 19, Alnarp SE230 53, Sweden
[3]Analytical Chemistry, AgroBioChem Department, Gembloux Agro-Bio Tech, Université de Liège, Gembloux, Belgium.

Corresponding author: Caroline.Nieberding@uclouvain.be

Author contributions: BV analyzed the data, wrote and edited the manuscript; ID, SH, GL and CMN developed the experimental methods; ID, SH, FL and PMBB collected data; GL discussed and edited the manuscript; CMN conceived and designed the research, analyzed the data, wrote and edited the manuscript.

Data availability: Data will be made available as supplementary information**.**

Acknowledgments: This work was supported by the Fonds de la Recherche Scientifique - FNRS under grant n° 24905063 and 29109376. This is BRC publication 415 of the Biodiversity Research Centre.

Conflict of interest: The authors declare no conflict of interest.

Keywords: Solvent extraction; Headspace extraction; Lepidoptera; Chemical communication; Female choice

Abstract

Olfactory communication can be of critical importance for mate choice decisions. Lepidoptera are important model systems for understanding olfactory communication, particularly considering sex pheromone signaling in the context of sexual selection. The extraction or rinsing of pheromone-producing structures is a widespread method for quantifying sex pheromones, but such measures reflect what is stored and not what is actually emitted by an individual during courtship. Here, we address this point by quantifying male sex pheromone (MSP) levels of interacting *Bicyclus anynana* butterflies using headspace sampling and tissue extraction after completion of experiments. Our results show that tissue extracts do not accurately predict pheromone quantities emitted by live butterflies. We further show that MSP quantities estimated by headspace sampling correlate with male mating success and that males actively control pheromone emission when faced with increasing male-male competition. Common practice tissue extracts thus do not reflect pheromone signals as they are perceived by choosy females, which should be taken into account in studies on sexually selected olfactory signals. Our easy-to-use entrainment system can readily be adapted and used for headspace sampling live individuals of any small- to medium-sized insect.

Introduction

Sexual selection was first defined by Charles Darwin and Alfred Russel Wallace as a type of natural selection where access to reproduction depends on a specific part of the environment, i.e. the other sex[1,2]. In many distinct taxa, differential investment in reproduction by the two sexes, including anisogamy, has led to the emergence of a choosy sex, usually females, which use phenotypic traits of the other sex, usually males, to select mating partners. Such male phenotypic traits have evolved as sexually dimorphic, secondary sexual traits[3,4]. Sexual selection can be a major driver shaping the evolution of secondary sexual traits and can also lead to the evolution of reproductive isolation[5,6]. It is, therefore, essential to accurately quantify sexually selected traits as they are perceived by the other, choosy sex, because it is this information that sexual selection acts upon.

While sexual selection research has had a large focus on morphological and acoustic traits, it is likely that many organisms interact mostly through chemical signals, and this is particularly true for sex[7–9]. Sex pheromones are chemical, usually olfactory, sexually selected traits that can be critical for reproductive success, because these signals can convey information on the location, quality, sex, and species identity of potential mates[8,10,11]. For a wide array of invertebrate and vertebrate taxa it is common practice to quantify olfactory signals, such as sex pheromones, by tissue extraction (or rinsing) of pheromone-producing structures, which are removed and subsequently soaked in a solvent[8,12]. A recent overview of pheromone signaling in 34 species of moth, for example, reported that at least 85% of studies used tissue extraction/rinsing of pheromone-producing glands to quantify pheromone levels[13]. Tissue extraction or soaking of olfactory signals has indeed proven very efficient over the last decades to assess inter-individual variation in pheromone amounts. The quantification of a chemical compound

may, however, differ depending on whether it is collected by tissue extraction/rinsing or collected from the air when it is emitted by the animal. Differences in storage capacity or emission rate of pheromone-producing structures, as well as sexual activity (such as courtship) can limit or aid the dissemination of chemical compounds in the air. In addition, the intrinsic volatility and chemical affinity of the compound to the tissue where it is produced or stored may also affect its emission in the air. The practice to soak or rinse pheromone-producing tissues may thus not reliably quantify olfactory sexual signals as they are emitted and perceived by the choosing sex during courtship behavior.

Lepidoptera have become important model organisms in studies on sexual selection of olfactory communication[8]. After identification of the first sex pheromone in the silk moth *Bombyx mori*[10], early work on sexually selected olfactory signals focused on female moths that release remarkably long-range pheromone plumes to attract conspecifics[14]. The quantification of sex pheromone as it is released in the air by individuals performing courtship behavior has occasionally been done using female moths, which have the advantage of remaining immobile when "calling" for males at night. This approach remains an exception in the field of chemical ecology, however, particularly in sexual selection studies. Moreover, olfactory signals emitted by males are hardly ever estimated using methods other than tissue extraction. Male moths and butterflies also emit pheromones during courtship, and sex pheromones in male Lepidoptera are usually emitted at close range[15–19]. A diverse array of specialized structures, including sex scales (macula), coremata, and hairpencils, located on the abdomen, legs, or wings, are involved in the emission of a blend of compounds shortly before and during courtship behavior[15,18,20–22]. The emission of male sexually-selected olfactory signals is further accompanied by stereotyped movements, leading to a

stereotyped courtship behavior that is expected to play a role in the emission of sex pheromones[19].

In this study, we evaluated whether common practice tissue extraction provides an accurate estimate of chemical signals emitted during courtship. To test this, we developed a method for quantifying male olfactory signals emitted in the air by live, courting, males and compare that to tissue extracts of the same individuals after completion of experiments. If differences are found between classical tissue extraction/rinsing methods and our new method this would suggest that our understanding of how sexual selection affects the evolution of olfactory traits is biased, which could affect the conclusions of hundreds, if not thousands, of published studies. We use the butterfly *Bicyclus anynana* (Lepidoptera: Nymphalidae) as a model system, because much information is already available about sexual selection through olfactory communication in this species[9,19,23–29]. *B. anynana* males compete for access to females and perform a stereotyped courtship sequence that includes wing flickering (rapid movement of the wings) and thrusting (contact made by the male with his head, antenna, or legs to the side of the female)[19]. During thrusting, the androconial hairs (i.e. pheromone-producing structures) become visible as they fan out and reach beyond the male's wing surface[19] (Figure 1), a time at which males emit the sex pheromone. The sex pheromone is formed by three active components: (Z)-9-tetradecenol (Z9-14:OH or "male sex pheromone 1"; MSP1), hexadecanal (16:Ald; MSP2), and 6,10,14-trimethylpentadecan-2-ol (MSP3). Females do not emit these MSP components, but readily perceive them through their antenna[19,28]. Males with artificially reduced MSP production after surgical removal of androconia or after androconia are covered with varnish indeed suffer from reduced mating success[19,24]. MSP composition was further found to be a reliable indicator of male identity, level of inbreeding, level of starvation,

124 and age[26,27], i.e. females were shown to use variation in absolute and relative amounts of
125 these three components in deciding with whom to mate. Selection on male-specific wing
126 chemical compounds among *Bicyclus* species was further shown to play a key role in
127 reproductive isolation within this genus, containing over 80 different species[9]. All these
128 studies used the classical wing extraction method, and showed that male wings produce
129 larger amounts of MSP3 (usually ~10 μg per individual) than MSP1 (~2 μg per individual)
130 and that MSP2 is only a minor component (~0.4 μg per individual). Here, we asked
131 whether these absolute amounts of MSP components are similar when emitted in the air
132 by courting males, because sex pheromone emission, not storage on wings, is what sexual
133 selection acts upon through female choice. We further determined whether MSP emission
134 is linked to mating success and if males control the emission of MSP.

135 To quantify sex pheromone emission during *B. anynana* courtship, we designed an
136 experimental set-up that uses dynamic headspace sampling followed by gas
137 chromatography to measure emitted MSP components in the air and compared that with
138 MSP amounts obtained by the classical wing extraction method, using the same
139 individuals. Our results revealed that tissue extracts provide inaccurate estimates of what
140 is emitted by courting males when compared with headspace sampling. MSP was also
141 found to contribute to mating success, but only when measured by headspace sampling.
142 Our results further showed that males actively control the amount of emitted MSP,
143 depending on the level of competition they experience. Overall, our results reveal that
144 solvent-based tissue extraction can blur the quantification of olfactory signals as they are
145 perceived by potential mates. Our findings can have broad implications in the field of
146 olfactory communication, particularly sexual selection studies, and we propose that the
147 entrainment system designed here, which is easy to set up, could readily be adapted for
148 pheromone sampling of other lepidopterans (producing similar compounds[30]) or

medium-sized insects that use airborne chemicals for any function of chemical communication.

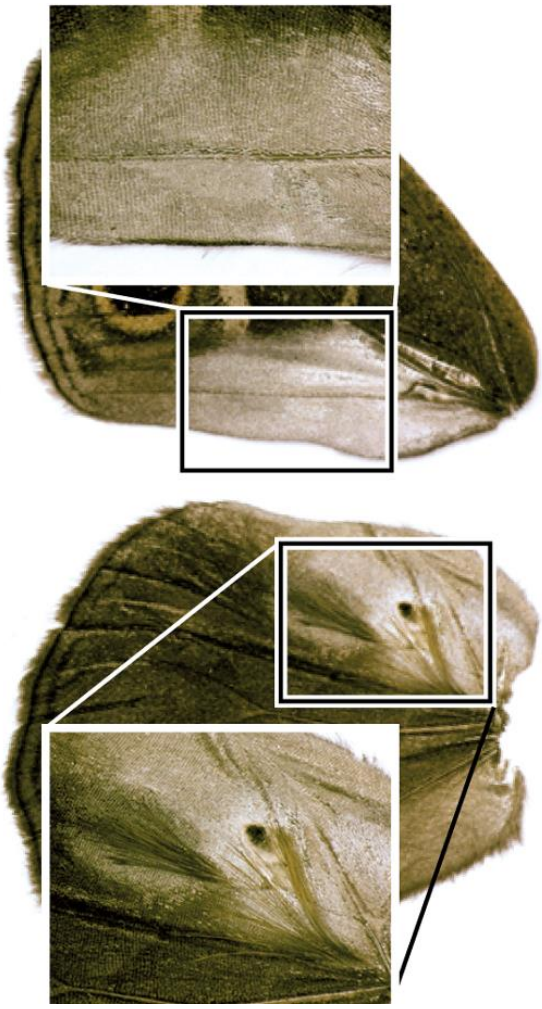

Figure 1 Male ventral forewing containing sex scales (top) and dorsal hindwing containing both sex scales and androconia (bottom).

Results

Do tissue extracts reflect olfactory signals emitted during courtship?

We aimed to determine if one of the most commonly used methods in studies on olfactory communication, tissue extraction in a solvent, reliably reflects olfactory signals as they

are emitted in the air. To test this, quantities of MSP components emitted in the air during courtship were determined using headspace sampling and compared with wing extracts in hexane of the same individual after experiments ended. Our null hypothesis was that both methods would measure similar amounts of MSP components. Average MSP amounts per male differed strongly between methods for MSP2 and MSP3, but not for MSP1. For MSP1, MSP quantities found on the wing at the end of behavioral experiments were similar to what was emitted by males during a day of courtship activity (wing extract mean ± 1SE: 5.4 ± 0.6 µg; headspace sampling mean ± 1SE: 4.8 ± 0.5 µg; t-test, $t = -1.18$; $df = 74.84$; $p = 0.241$). In contrast, MSP3 was detected in the air at a concentration eleven times lower than what was extracted from the wings (wing extract mean ± 1SE: 19.5 ± 2 µg; headspace sampling mean ± 1SE: 1.8 ± 0.3 µg; t-test $t = -10.65$; $df = 59.66$; $p < 0.0001$). MSP3 is thus not the most abundant chemical perceived by *B. anynana* females. We further found a correlation in MSP1 and MSP3 quantities between wing extracts and headspace sampling of individual males (MSP1: MSP1: $R^2_{adj} = 0.52$, $F_{1,41} = 46.87$, $p < 0.0001$; MSP3: $R^2_{adj} = 0.23$, $F_{1,45} = 13.71$, $p < 0.001$; Figure 2). Surprisingly, we did not find any MSP2 in headspace samples, while MSP2 was present in typical amounts in male wing extracts[19,26,28] (wing extract mean ± 1SE: 1978 ± 193 ng).

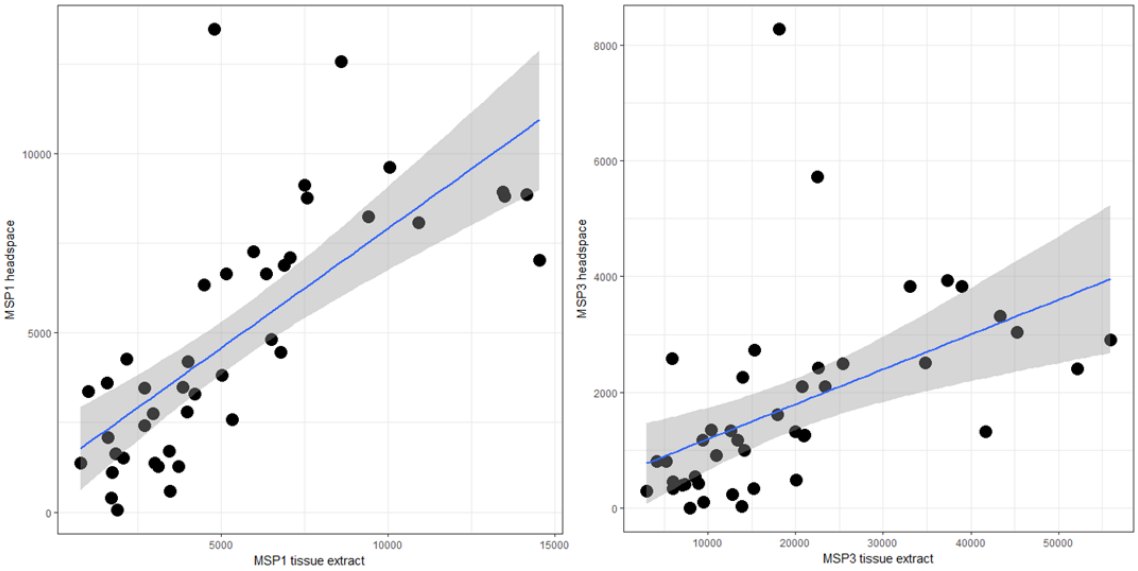

Figure 2: Correlation between MSP1 (left) and MSP3 (right) amounts (in ng/individual) obtained by headspace sampling live butterflies during 22.5 hours (Y axis) or wing tissue extraction after completion of behavioral experiments (X axis).

Does MSP amount contribute to mating success?

We produced different sex ratios to manipulate the level of male-male competition: female-biased, equal, or male-biased sex ratios (1:3, 1:1 and 3:1, male:female). The relative number of mated males (i.e. the number of matings divided by the number of males within one treatment) decreased with increasing male-biased sex ratios (R_{adj} = 0.31; $F_{1,41}$ = 19.9; $p < 0.001$). Increased male-male competition was thus associated with increasing male-biased sex ratio, as expected[31,32]. We further expected that increasing male competition would induce males to produce and/or emit more MSP during courtship. We, therefore, tested whether MSP levels obtained through headspace sampling or wing extracts best explained male mating success. We found that amounts of MSP1 and MSP3 components quantified in the air using headspace sampling increased with the number of matings (Table 1). In contrast, MSP1 and MSP3 components

quantified by wing extraction did not covary with number of matings (Table 1). We could not compare the role of MSP2 as the latter was not detected in headspace samples.

Table 1: Summary of models testing for the effects of sex ratio and mating number on MSP1 and MSP3

		Headspace			Wing extract		
Variables	Model terms	Estimate +/- 1SE	LRT	p	Estimate +/- 1SE	LRT	p
MSP1	Intercept	2994.6 +/- 1678.1			1850.0 +/- 627.4		
	Sex ratio	**3347.6 +/- 809.3**	**15.2**	**< 0.0001**	**2396.5 +/- 334.8**	**26**	**< 0.0001**
	Mating number	**4022.5 +/- 1055.2**	**8.0**	**0.005**			
	Sex ratio*Mating number	**-1146.4 +/- 486.1**	**6.8**	**0.009**			
MSP3	Intercept	-2116.2 +/- 1036.4			6655 +/- 2353		
	Sex ratio	**1520.4 +/- 460.2**	**1.4**	**0.241**	**8649 +/- 1258**	**24.7**	**< 0.0001**
	Mating number	**2710.4 +/- 635.6**	**6.9**	**0.008**			
	Sex ratio*Mating number	**-864.7 +/- 283.8**	**9.3**	**0.002**			

Do males actively control MSP emission?

We aimed to assess whether males can actively control MSP emission or whether MSP components are emitted passively[19]. We hypothesized that if MSP emission is actively controlled by males, MSP headspace amounts should correlate with courtship activity, but not with general mobility because MSP should be emitted specifically when MSP are useful, i.e. when courting females. We contrasted two types of male behaviors that were recorded during mating experiments: male sexual activity as represented by male courtship (fluttering and thrusting) and male general movements (walking, flying) as an internal control. Both MSP1 and MSP3 headspace amounts increased significantly with male courtship activity (Table 2; Figure 3), while MSP1 and MSP3 headspace amounts decreased significantly when male general movements increased (Table 2). No MSP2 was found to be emitted at any sex ratio.

Table 2: Summary of models testing for the effects courtship behaviors and general movements on MSP1 and MSP3 headspace amounts

Variables	Model terms	Estimate +/- 1SE	LRT	p
MSP1	Intercept	1714.6 +/- 1338.3		
	Courtship behaviors	**2451.7 +/- 916.9**	**7.2**	**0.0007**
	General movements	**-1670.9 +/- 655.0**	**6**	**0.014**
MSP3	Intercept	-1186.4 +/- 996.7		
	Courtship behaviors	**1215.2 +/- 567.9**	**5.8**	**0.016**
	General movements	**-1104.4 +/- 421.9**	**7.5**	**0.006**
LRT = log-likelihood ratio test				

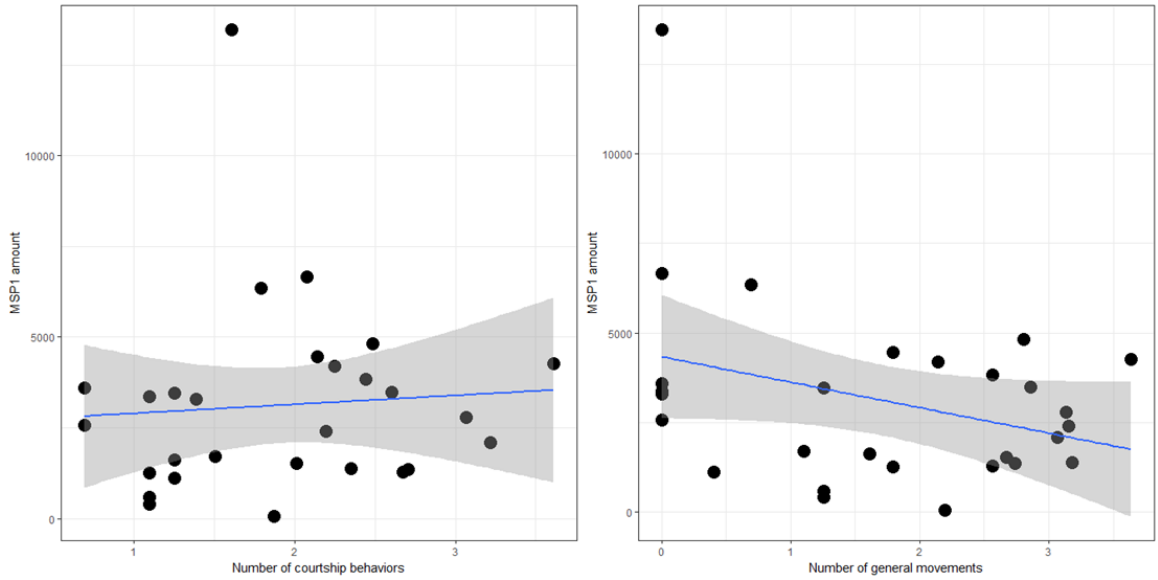

Figure 3: Headspace amounts (in ng/individual) in response to increasing courtship activity (left) or general movement (right) for MSP1.

Discussion

We designed an easy-to-use entrainment system for quantifying sex pheromones emitted during courtship behavior of *Bicyclus anynana*, the first butterfly to date for which such data has been obtained. Our results show that one of the most common methods used to quantify olfactory signals, tissue extraction, does not accurately reflect pheromone quantities as they are available in the air for female perception. MSP2 and MSP3 indeed

226 displayed strikingly different average amounts when sampled using headspace collection
227 or wing extraction. We further showed that MSP1 and MSP3 were correlated across
228 sampling methods. MSP components quantified in the air, but not in wing extracts, were
229 then shown to increase with the number of matings; hence pheromone quantities emitted
230 in the air, rather than stored on the wings, contribute to mating success. MSP amounts
231 emitted in the air were further found to increase with courtship activity, but to decrease
232 in relation to general movements. Males thus actively control the emission of MSP when
233 courting females.

234 Accurately quantifying olfactory sexually selected signals using air extracts is
235 critical, because presence of pheromones in the air is a way by which the other sex can
236 collect olfactory information about potential mates[13]. Whilst our study is the first to link
237 courtship behavior to pheromone emission in the air, measuring sex pheromone release
238 in live individuals is not new. Byrne (1975)[33] already recognized that tissue extraction
239 may not reflect pheromone emission and designed a headspace sampling method for
240 insects using absorption on Porapak Q. This method was then successfully used to
241 measure sex pheromones of several lepidopteran species[34,35]. What is striking is that
242 most studies using Byrne's method found that pheromone quantities or ratios were not
243 similar when determined by headspace sampling or tissue extracts[33,36,37] (but see[38]),
244 similar to our own findings. The need to collect pheromones from air rather than tissues
245 was thus already clear in the 70s[37,39–41].

246 How do the discrepancies between headspace sampling and wing extracts affect
247 our understanding of sexual selection acting on olfactory communication in *B. anynana*?
248 Earlier studies revealed that *B. anynana* males produce, and females perceive, 3
249 components forming the male sex pheromone. MSP1 and MSP2 amounts were repeatedly
250 found to be present in higher amounts in wing extracts of males with high mating success

251 and were indicative of male age and inbreeding level[19,26,27], while the amount of MSP3 did
252 not correlate with male genetic quality and mating success[27]. In addition, MSP2 quantity
253 was suspected[26], and recently proven[42], to be of central importance in determining male
254 mating success compared to MSP1 or MSP3. These short-range MSP components were
255 thus indeed found to be reliable signals for estimating the suitability and quality of a
256 potential mating partner. Contrary to these findings, in this study male mating success
257 correlated to increasing amounts of MSP1 and MSP3 when collected using headspace
258 sampling, but not in wing extracts, and males mated despite the absence of MSP2 in
259 headspace extracts. For wing extractions male wings were collected right after behavioral
260 experiments had ended in previous studies, as well as this study. This excludes the
261 possibility that differences in MSP wing extraction methodology would be responsible for
262 the lacking correlation between MSP quantities from wing extracts and mating success in
263 this study. We can further reasonably assume that headspace extracts are more reliable
264 estimates of olfactory signals as they are perceived, and under sexual selection, by
265 females compared to wing extracts (although olfactory perception of chemical signals
266 remains understudied compared to signal emission). As MSP1 and MSP3 amounts covary
267 between wing extracts and headspace sampling (Figure 2), we suggest that the relative
268 quality of males in a group of competitors can be reliably estimated based on
269 quantification both by wing tissue extraction or headspace sampling, and that this is
270 likely what females use for assessing potential mates. Absence of a link between wing
271 extracts and mating success in the experiments reported here may thus be due to the
272 reduced cage volume used for assessing mating success, because butterflies could not
273 really take off and fly.

274 The most striking difference between MSP wing extracts and headspace sampling
275 was the absence of MSP2 in the latter. Absence of MSP2 in headspace extracts could be

276 due either to technical limitations or to a behavioral decision by males, which were
277 indeed found to control MSP1 and MSP3 emission. Technical limitations are unlikely for
278 several reasons. First, we have collected MSP1 (tetradecen-1-ol) in expected amounts in
279 headspace samples, and this fatty acid derived component is a long-chain molecule like
280 MSP2 (hexadecanal). Second, we used different types of cartridges (Tenax TA, Super Q,
281 Poropak, HayeSep and Silice), as well as two cartridges in series (Tenax-TA) during pilot
282 experiments. Third, during pilot experiments a range of flow rates was used for
283 headspace collection, ranging from 75 mL min^{-1} up to 800 mL min^{-1}. We further used
284 males of different ages and densities of up to ten males. None of these trials led to
285 collection of even trace amounts of MSP2. Absence of MSP2 in headspace samples thus
286 suggests that MSP2 emission is actively controlled by males and that the experimental
287 environment used did not elicit active emission of MSP2. A plausible explanation for the
288 absence of MSP2 may be the limited volume of the entrainment chamber (1.4 L). This
289 could have prevented MSP2 emission, for example if MSP2 is an arrestant pheromone, i.e.
290 a signal emitted by flying males to stimulate landing by females before males start their
291 land-based courtship sequence[43]. It could also be that males did not invest in the emission
292 of this costly MSP component[44], because females could not escape this unnaturally small
293 arena, providing males with an overall high chance of mating.

294 The second main problem brought to light by the comparison of headspace
295 samples and wing extracts was that the relative amounts of MSP1 and MSP3 were
296 inverted between the two methods of quantification: there was about three times more
297 MSP1 than MSP3 in the air, while less MSP1 than MSP3 is usually found in wing extracts.
298 Relative proportions of sex pheromone components are known to be of great importance
299 for species identification in many Lepidoptera[45]. In addition, sexually selected traits
300 involved in assessing male quality are usually under strong directional selection[4]. We

301 were thus biased in previous studies with *B. anynana* by believing that MSP3 was possibly
302 under strongest directional sexual selection as this MSP was present in highest amounts
303 on male wings. Our current experiments reveal that MSP1 was 3 times more abundant
304 than MSP3 in the air, and although MSP3 amount increased with mating success, this may
305 simply be due to the fact that MSP3 amount correlates to MSP1 amount[26] (this study).
306 The unimportance of MSP3 compared to MSP1 is further suggested by a significant
307 change in MSP1, but not MSP3, amounts in response to inbreeding levels[27].

308 In conclusion, as short-range sex pheromone quantities can be under strong
309 sexual selection it is important to accurately estimate and measure sex pheromone
310 emission during actual courtship behaviors, because these are the chemical signals
311 perceived by choosy females. We suggest that studies interested in mate choice and
312 sexual selection based on olfactory communication should thus take into account that
313 tissue extracts might not reflect what individuals actually perceive. In order to determine
314 the importance of a chemical for interacting individuals, we need to establish what is
315 actually emitted in the air and assess how that affects behavioral responses and we
316 propose a novel experimental setup to do just that.

317

318 Materials and methods

319 *Model organism* B. anynana

320 An outbred laboratory population of *B. anynana* was established at the Université
321 catholique de Louvain (Belgium) in 2012 from an existing laboratory population that was
322 established in 1988 from over 80 gravid field-caught females in Malawi, Africa. Larvae
323 were reared on maize (*Zea mays mays*) and adults were fed bananas (*Musa acuminata*)
324 *ad libitum*. Population sizes were maintained at around 400 to 600 adults for each

325 generation to preserve high levels of heterozygosity[46]. Experiments were performed on
326 individuals reared in a climate chamber under a standardized temperature regime at 26.0
327 ±2.0°C, a relative humidity of 70 ±15% and a photoperiod of 12:12 L:D, representing the
328 tropical wet season under natural conditions. Sexes were separated on the day of
329 emergence and virgin males and females between 7 to 10 days and 4 to 6 days of age,
330 respectively, used for experiments.
331
332 *Experimental set-up for headspace sampling*
333 A custom-built headspace entrainment arena with a capacity of 1.8 L (Pierre E. ltd.,
334 Vilvoorde, Belgium) was used to collect volatile chemical components produced by live
335 *B. anynana* males. Custom-made sorbent cartridges were prepared with 60 mg Tenax-TA
336 20/35 sorbent (04914, Grace Davidson Discovery Science, IL) in glass tubes (Figure 4).
337 Sorbent cartridges were coupled to Teflon tubings (BOLA PTFE 8 mm i.d.) at both sides
338 with one side facing the arena and the other side facing an air pump (Escort ELF Personal
339 Air Sampling Pump, Zefon International Inc., Florida USA) operating at 0.8 L min^{-1}.
340 Airflow was verified prior to connection to the system using a digital flowmeter
341 (MesaLabs Bios Defender 520, Colorado, USA). Sorbent cartridges were further cleaned
342 by flushing with 1.5 ml of 90:10 v/v mixture of n-hexane and diethyl ether and left to dry
343 before each experiment. Prior to use the whole entrainment system was thoroughly
344 cleaned.
345
346 *Behavioral observations*
347 Before individuals were used in experiments, male abdominal tips were dusted with a
348 U.V. fluorescent powder dye ('rodent-tracking' fluorescent dust, chartreuse "TP35"
349 Radiant Color NV, Houthalen, Belgium) to allow tracking of copulation events through

350 dust transfer between genitalia[47]. We produced three treatments with increasing male-
351 biased sex ratio: 1:3, 1:1 and 3:1 males to females, using different virgin males and
352 females, using 14, 15 and 14 replicates, respectively. The entrainment chamber was
353 headspace sampled over a 22.5 hour period. To link pheromone emission to male activity,
354 behaviors were observed and recorded using the program The Observer v. 5.0 (Noldus,
355 Hilversum, the Netherlands). Recorded behaviors included the number and duration of
356 general activities (walking, flying), as well as the number and duration of courtship
357 behaviors (i.e. courtship sequences that included male wing fluttering) and the number
358 of matings. As courtship activity peaks in the afternoon (unpublished data), behavioral
359 observations started around 12:00. Male activity was examined during 15 minutes at the
360 start of the experiment, and for another 15 minutes one hour later (starting at 13:00).
361 Courtship activity takes place during the entire daylight phase, but observations of 30
362 minutes during peak activity provide an accurate measurement of all activities (pers. obs.
363 CMN and BV). To avoid stress during the entrainment period, a non-sterile cotton wool
364 segment (~60 mm x ~40 mm) containing ~5 ml of cane sugar solution diluted in water
365 (5 g in 200ml^{-1}) was added to the entrainment arena. This allowed *ad libitum* feeding
366 without volatile contamination. Control entrainments in which no insects were added to
367 the arena were also performed to verify the absence MSPs (levels < LOD). After the
368 entrainment was terminated, male genital regions were viewed under UV light at 365nm
369 (18W Blacklight-Blue F18W/T8/BLB, Havells-Sylvania, Antwerp Belgium) to determine
370 if mating had occurred during the 22.5 hour entrainment period. Males were then
371 collected and frozen at -80 °C, after which wings were removed and used for MSP
372 quantification by wing extraction (see below).
373

374 *MSP quantification using headspace sampling and wing extracts*

375 After each entrainment experiment, sorbent cartridges were eluted twice with 200 µl
376 90:10 v/v n-hexane-diethyl ether. Ten µl of trans-4-tridecenyl acetate was then added to
377 the elution solvent to provide an internal standard with a final concentration of 5ng μl^{-1}.
378 This enabled direct comparison with obtained peak areas. As elution from the cartridge
379 was expected to be less than the full solvent volume applied, 10 µl of a second standard
380 (C10 butylbenzene; final concentration of 1 ng μl^{-1}) was added directly prior to cartridge
381 elution. Analysis of the butylbenzene peak area within a complete 220 µl solvent volume
382 enabled us to quantify actual solvent loss in every elution. GC analyses were carried out
383 on an Agilent GC7890A gas chromatograph fitted with a flame ionisation detector
384 (Agilent Technologies, Belgium) and a splitless injector at 250 °C. A 30m x 0.32 mm DB-5
385 (df=0.2 µm) column (Agilent, 19091J-413) was used with H_2 as the carrier gas at a
386 constant flow of 30 $ml.min^{-1}$. The temperature program was as follows: initial
387 temperature of 75°C for 3 minutes which was then programmed to 220°C at 20°C min^{-1}
388 until 300 °C at 30°C min^{-1} with a final hold of 7 min. The FID was maintained at 250°C.
389 Injections were made using a 7693 ALS autosampler (Agilent), injecting 1µl. All
390 acquisitions and integrations were examined with GC Chemstation B.04.03-SP2 (Agilent).
391 Wing extractions were performed according to Nieberding et al[19] and Heuskin et al[28].
392 Briefly, MSP components were extracted by placing one fore- and one hind-wing of each
393 male in 350ul n-hexane, which contained an internal standard (trans-4-tridecenyl acetate
394 at 10 ng ul^{-1}), for 10 min. Separations were carried out in the aforementioned
395 chromatographic conditions. This allowed for a direct comparison between 'on-wing'
396 MSP levels and headspace MSP collections.

397

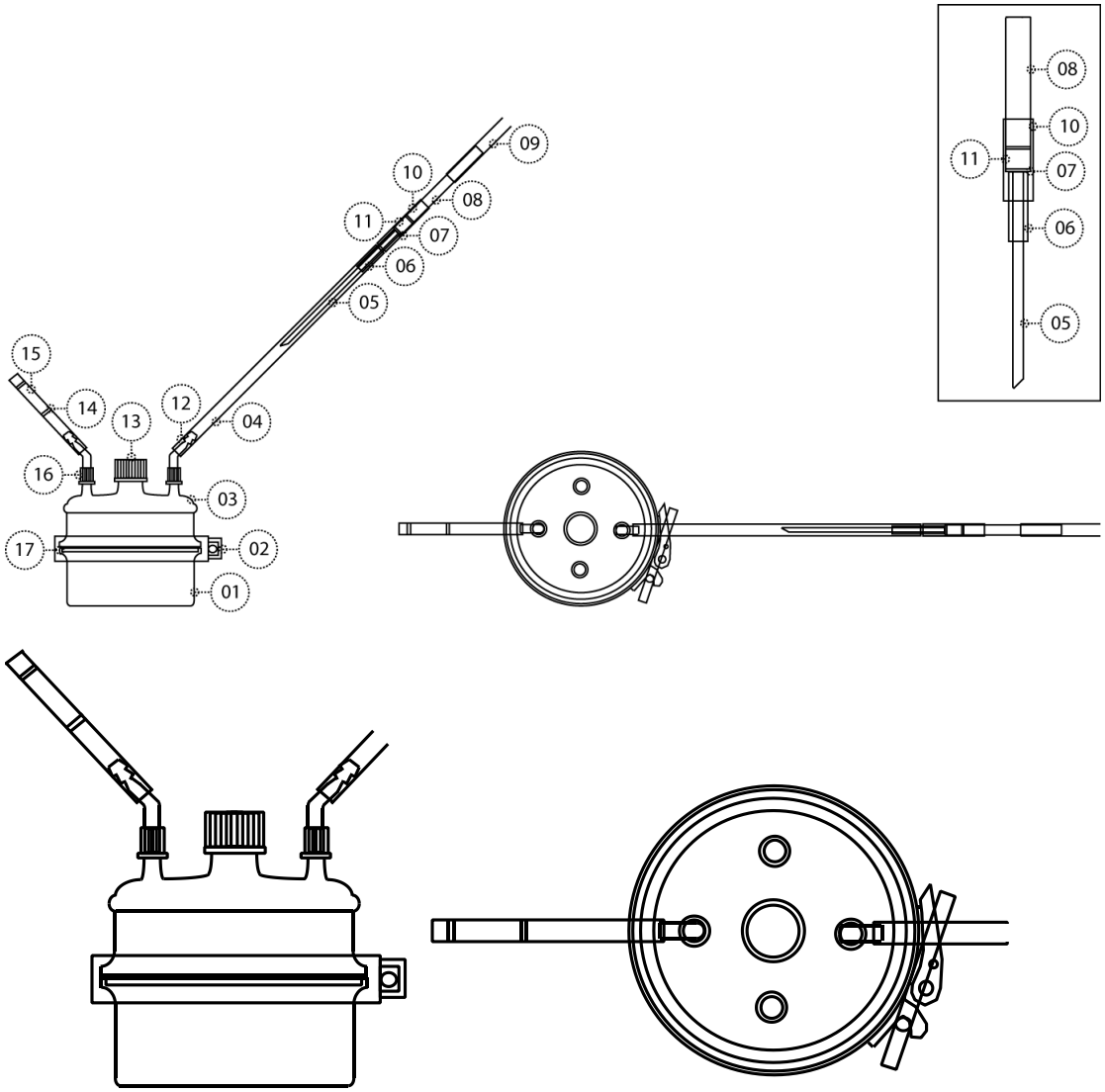

Figure 4: Top: Headspace entrainment arena. Left: side view (with two smaller ports omitted from the lid). Right: viewed from above showing all ports. Labels: 01: culture flask injection head; 02: stainless steel band; 03: corresponding culture flask lid with added ports; 04: 8mm PTFE tubing; 05: 3mm glass with 45 degree cut; 06:5.5mm outer diameter PTFE; 07: 7 mm outer diameter PTFE; 08: 7mm outer diameter glass; 09: 8 mm PTFE tubing; 10: metal grid; 11: Tenax-TA 20/35; 12: silicone rubber sealed plastic hose connector; 13: GL45 centralised screwthread with cap; 14: glass wool plug; 15: activated dry carbon; 16: GL14

screwthread and cap with aperture; 17: PTFE 'O' ring. Inset: magnified annotated sorbent cartridge design. Bottom: magnified view from side and from above.

Statistics

Statistical analyses were done using R 3.3.1 (R Core team, 2016)[48] via the RStudio Desktop v0.99.903 (RStudio Inc., Boston, Massachusetts, USA). We used a linear model to test for a correlation between MSP amounts obtained using headspace sampling and wing extracts (for MSP1 and MSP3 separately). MSP1 and MSP3 quantities were further compared between methods using t-tests. A linear mixed effects model (GLMM; lme4 package) was then used to test for the effect of mating number and sex ratio on MSP quantities with the following structure: *Y ~ sex ratio* (fixed) + *mating number* (fixed) + *sex ratio x mating number* + *male age* (random) + *female age* (random). All replicates were used for this model (n = 43). To test for the effect of courtship behaviors, general movements and sex ratio on MSP quantities the following linear mixed effects model was fitted: *Y ~ sex ratio* (fixed) + *log courtship behaviors* (fixed) + *log general movements* (fixed) + *log courtship behaviors x log general movements* (fixed) + *male age* (random) + *female age* (random). For the latter model, only experiments where a single male was present were used (n = 28). Full models went through model simplification to obtain the minimal adequate model.

References

1. Darwin, C. *On the origin of species by means of natural selection or the preservation of favoured races in the struggle for life.* (John Murray, 1859).
2. Wallace, A. R. Note on sexual selection (S459: 1892). Editor Smith, C. H. *http://people.wku.edu/charles.smith/wallace/S459.htm*

3. Janicke, T., Häderer, I. K., Lajeunesse, M. J. & Anthes, N. Darwinian sex roles confirmed across the animal kingdom Darwinian sex roles confirmed across the animal kingdom. *Sci. Adv.* **2,** 1–10 (2016).

4. Rodríguez, R. L. *et al.* Diversification under sexual selection: The relative roles of mate preference strength and the degree of divergence in mate preferences. *Ecol. Lett.* **16,** 964–974 (2013).

5. Boughman, J. W. Divergent sexual selection enhaces reproductive isolation in sticklebacks. *Nature* **411,** 944–948 (2001).

6. Panhuis, T. M., Butlin, R., Zuk, M. & Tregenza, T. Sexual selection and speciation. *Trends Ecol. Evol.* **16,** 364–371 (2001).

7. Smadja, C. & Butlin, R. K. On the scent of speciation: The chemosensory system and its role in premating isolation. *Heredity (Edinb).* **102,** 77–97 (2009).

8. Wyatt, T. D. *Pheromones and animal behaviour: chemical signals and signatures*. (Cambridge Univ Press, 2014).

9. Bacquet, P. M. B. *et al.* Selection on male sex pheromone composition contributes to butterfly reproductive isolation. *Proc. R. Soc. B Biol. Sci.* **282,** 20142734 (2015).

10. Karlson, P. & Lüscher, M. 'Pheromones': A new term for a class of biologically active substances. *Nature* **183,** 55–56 (1959).

11. Johansson, B. G. & Jones, T. M. The role of chemical communication in mate choice. *Biol. Rev.* **82,** 265–289 (2007).

12. Darragh, K. *et al.* Male sex pheromone components in *Heliconius* butterflies released by the androconia affect female choice. *PeerJ* **5,** e3953 (2017).

13. Umbers, K. D. L., Symonds, M. R. E. & Kokko, H. The mothematics of female pheromone signaling: Strategies for aging virgins. *Am. Nat.* **185,** 417–432 (2015).

14. Greenfield, M. D. Moth sex pheromones: An evolutionary perspective. *Florida*

457 *Entomol.* **64,** 4–17 (1981).

458 15. Andersson, J., Borg-Karlson, A.-K., Vongvanich, N. & Wiklund, C. Male sex
459 pheromone release and female mate choice in a butterfly. *J. Exp. Biol.* **210,** 964–
460 970 (2007).

461 16. Sappington, T. W. & Taylor, O. R. Genetic sources of pheromone variation in Colias
462 eurytheme butterflies. *J. Chem. Ecol.* **16,** 2755–2770 (1990).

463 17. Phelan, P. L. & Baker, T. C. Evolution of male pheromones in moths: repoductive
464 isolation through sexual selection. *Science (80-.).* **235,** 205 (1987).

465 18. Birch, M. C., Poppy, G. M. & Baker, T. C. Scents and eversible scent structures of
466 male moths. *Annu. Rev. Entomol.* **35,** 25–58 (1990).

467 19. Nieberding, C. M. *et al.* The male sex pheromone of the butterfly Bicyclus anynana:
468 Towards an evolutionary analysis. *PLoS One* **3,** 1–12 (2008).

469 20. Boppré, M. & Vane-Wright, R. I. Androconial systems in Danainae (Lepidoptera):
470 functional morphology of *Amauris, Danaus, Rirumala* and *Euploea*. *Zool. J. Linn.*
471 *Soc.* **97,** 101–133 (1989).

472 21. Myers, J. Pheromones and courtship behavior in butterflies. *Am. Zool.* **12,** 545–
473 551 (1972).

474 22. Vane-Wright, R. I. & Boppré, M. Visual and chemical signalling in butterflies:
475 functional and phylogenetic perspectives. *Philos. Trans. R. Soc. B Biol. Sci.* **340,**
476 197–205 (1993).

477 23. Prudic, K. L., Jeon, C., Cao, H. & Monteiro, A. Developmental plasticity in sexual
478 roles of butterfly species drives mutual sexual ornamentation. *Science (80-.).* **331,**
479 73–5 (2011).

480 24. Costanzo, K. & Monteiro, A. The use of chemical and visual cues in female choice
481 in the butterfly *Bicyclus anynana*. *Proc. R. Soc. B Biol. Sci.* **274,** 845–851 (2007).

482 25. San Martin, G., Bacquet, P. & Nieberding, C. M. Mate choice and sexual selection in
483 a model butterfly species, *Bicyclus anynana*: State of the art. in *Proceedings of*
484 *Netherlands Entomological Society* **22,** 9–22 (2011).
485 26. Nieberding, C. M. *et al.* Cracking the olfactory code of a butterfly: The scent of
486 ageing. *Ecol. Lett.* **15,** 415–424 (2012).
487 27. van Bergen, E., Brakefield, P. M., Heuskin, S., Zwaan, B. J. & Nieberding, C. M. The
488 scent of inbreeding: a male sex pheromone betrays inbred males. *Proc. R. Soc. B*
489 *Biol. Sci.* **280,** 20130102–20130102 (2013).
490 28. Heuskin, S. *et al.* The composition of cuticular compounds indicates body parts,
491 sex and age in the model butterfly Bicyclus anynana (Lepidoptera). *Front. Ecol.*
492 *Evol.* **2,** 1–16 (2014).
493 29. Dion, E., Monteiro, A. & Yew, J. Y. Phenotypic plasticity in sex pheromone
494 production in *Bicyclus anynana* butterflies. *Sci. Rep.* **6,** 1–13 (2016).
495 30. Ando, T., Inomata, S. & Yamamoto, M. Lepidopteran sex pheromones. *Top. Curr.*
496 *Chem.* **239,** 51–96 (2004).
497 31. Nieberding, C. M. & Holveck, M.-J. Laboratory social environment biases mating
498 outcome: a first quantitative synthesis in a butterfly. *Behav. Ecol. Sociobiol.* **In**
499 **press,** (2017).
500 32. Holveck, M.-J., Gauthier, A.-L. & Nieberding, C. M. Dense, small and male-biased
501 cages exacerbate male-male competition and reduce female choosiness in
502 <Bicyclus anynana>. *Anim. Behav.* **104,** 229–245 (2015).
503 33. Byrne, K. J., Gore, W. E., Pearce, G. T. & Silverstein, R. M. Porapak-Q collection of
504 airborne organic compounds serving as models for insect pheromones. *J. Chem.*
505 *Ecol.* **1,** 1–7 (1975).
506 34. Kuwahara, Y. Scent scales substances of male <Pieris melete> Menetries

(Pieridae, Lepidoptera). *Appl. Entomol. Zool.* **14,** 350–355 (979).

35. Hirai, K. Male scent emitted by armyworms, *Pseudaletia unipuncta* and <Pseudoletia> (Lepidoptera, Noctuidae). *Appl. Entomol. Zool.* **15,** 310–315 (1980).

36. Roelofs, W., Hill, A. & Carde, R. Sex pheromone components of the redbanded leafroller, Argyrotaenia velutinana (Lepidoptera: Tortricidae). *J. Chem. Ecol.* **1,** 83–89 (1975).

37. Hill, A. S., Carde, R., Kido, H. & Roelofs, W. L. Sex pheromone of the orange tortrix moth, *Argyrotaenia citrana* (Lepidoptera: Tortricidae). *J. Chem. Ecol.* **1,** 215–224 (1975).

38. Toth, M. & Buser, H. R. Simple method for collecting volatile compounds from single insects and other point sources for gas-chromatographic analysis. *J. Chromatogr.* **598,** 303–308 (1992).

39. Sanders, C. J. & Weatherston, J. Sex-pheromone of Eastern spruce budworm (Lepidoptera: Tortricidae) - optimum blend of trans-11-tetradecenal and cis-11-tetradecenal. *Can. Entomol.* **108,** 1285–1290 (1976).

40. Percy, J. E., Gardiner, E. J. & Weatherston, J. Studies of physiologically active arthropod secretions 6. Evidence for a sex pheromone in female *Orgyia leucostigma* (Lepidoptera: Lymantriidae). *Can. Entomol.* **103,** 706–712 (1971).

41. Cross, J. H. *et al.* Porapak-Q collection of pheromone components and isolation of (Z)-and (E)-14-methyl-8-hexadecenal, sex pheromone components, from the females of four species of *Trogoderma* (Coleoptera: Dermestidae). *J. Chem. Ecol.* **2,** 457–468 (1976).

42. Dion, E., Pui, L. X. & Monteiro, A. Early-exposure to new sex pheromone blend alters mate preference in female butterflies and in their offspring. *bioRxiv* **https://do,** (2017).

532 43. Clearwater, J. R. Chemistry and function of a pheromone produced by the male of
533 the southern armyworm Pseudaletia separata. *J. Insect Physiol.* **18,** 781–789
534 (1972).
535 44. Martín, J. & López, P. Vitamin D supplementation increases the attractiveness of
536 males' scent for female Iberian Rock lizards. *Proceeding R. Soc. B* **273,** 2619–2624
537 (2006).
538 45. Groot, A. T. *et al.* Experimental evidence for interspecific directional selection on
539 moth pheromone communication. *Proc. Natl. Acad. Sci. U. S. A.* **103,** 5858–5863
540 (2006).
541 46. Brakefield, P. M., Beldade, P. & Zwaan, B. J. The African butterfly *Bicyclus anynana*:
542 A model for evolutionary genetics and evolutionary developmental biology. *Cold*
543 *Spring Harb. Protoc.* **4,** 1–10 (2009).
544 47. Joron, M. & Brakefield, P. M. Captivity masks inbreeding effects on male mating
545 success in butterflies. *Nature* **424,** 191–194 (2003).
546 48. R Development Core Team. R: A Language and Environment for Statistical
547 Computing. (2016).
548