bioRxiv preprint doi: https://doi.org/10.1101/321216; this version posted May 24, 2018. The copyright holder for this preprint (which was not certified by peer review) is the author/funder, who has granted bioRxiv a license to display the preprint in perpetuity. It is made available under aCC-BY 4.0 International license.

De novo mutations drive the spread of macrolide resistant *Mycoplasma genitalium*: mathematical modelling study

Dominique Cadosch[1], Victor Garcia[1 2], Christian L. Althaus[1], Jørgen Skov Jensen[3], Nicola Low[1]

[1] Institute of Social and Preventive Medicine, University of Bern, Switzerland

[2] School of Life Sciences and Facility Management, Zurich University of Applied Sciences, Switzerland

[3] Research Unit for Reproductive Tract Microbiology, Statens Serum Institut, Copenhagen, Denmark

Correspondence to: Prof. Nicola Low, MD FFPH, Institute of Social and Preventive Medicine, University of Bern, Mittelstrasse 43, Bern, CH-3012, Switzerland. Tel: +41 31 631 3092; email: nicola.low@ispm.unibe.ch

bioRxiv preprint doi: https://doi.org/10.1101/321216; this version posted May 24, 2018. The copyright holder for this preprint (which was not certified by peer review) is the author/funder, who has granted bioRxiv a license to display the preprint in perpetuity. It is made available under aCC-BY 4.0 International license.

Abstract

The rapid spread of azithromycin resistance in sexually transmitted infections caused by *Mycoplasma genitalium* is a growing concern. It is not yet clear to what degree macrolide resistance in *M. genitalium* results from the emergence of *de novo* mutations or the transmission of resistant strains. We analysed epidemiological data and developed a compartmental model to investigate the contribution of *de novo* macrolide resistance mutations to the spread of antimicrobial resistant *M. genitalium*. We fitted the model to data from France, Sweden and Denmark and estimated treatment rates and the time point of azithromycin introduction. In a meta-analysis of six studies, we estimated that *de novo* resistance develops in 12% (95% CI 7–17%, I^2 44%) of azithromycin treated *M. genitalium* infections. Our model shows that the high probability of *de novo* resistance accelerates the spread of antimicrobial resistant *M. genitalium* in comparison with lower probabilities. The estimated per capita treatment rate in France was lower than in Denmark and Sweden but confidence intervals for the three estimates overlap. The estimated dates of introduction of azithromycin in each country are consistent with published reports. We conclude that clinical management strategies for *M. genitalium* should seek to limit the unnecessary use of macrolides.

bioRxiv preprint doi: https://doi.org/10.1101/321216; this version posted May 24, 2018. The copyright holder for this preprint (which was not certified by peer review) is the author/funder, who has granted bioRxiv a license to display the preprint in perpetuity. It is made available under aCC-BY 4.0 International license.

Introduction

Antimicrobial resistant *Mycoplasma genitalium* infections are increasingly common in many countries [1–14]. *M. genitalium* is a sexually transmitted bacterium which, together with *Chlamydia trachomatis*, is an important cause of non-gonococcal urethritis (NGU) in men and of cervicitis in women [15, 16]. *M. genitalium* is detected using nucleic acid amplification tests (NAATs), which were first developed during the 1990s as research tools because the bacterium is slow-growing and extremely hard to culture. In most clinical settings, NAATs for *M. genitalium* diagnosis are not available. The clinical syndrome of NGU is treated empirically, with a single 1g dose of azithromycin recommended for first line treatment in many countries since the late 1990s [17].

Macrolide resistance in *M. genitalium* results from a single nucleotide mutation in region V of the 23S rRNA gene, most commonly A2058G or A2059G. Jensen et al. identified these mutations in Australian and Swedish men, with NGU caused by *M. genitalium*, who did not respond to azithromycin [18]. In seven of nine patients who experienced clinical treatment failure with a single 1g dose of azithromycin, and who carried a wild-type organism before treatment, post-treatment specimens contained mutations in the 23S rRNA gene that conferred macrolide resistance [18]. Since then, other investigators have also detected macrolide resistance mutations *de novo* (also known as acquired, induced or selected) in *M. genitalium* [8, 11, 23–25].

In many European countries, the proportion of resistant infections approaches 50% [9, 10, 12]. A study in Greenland that reported on specimens collected from 2008 to

bioRxiv preprint doi: https://doi.org/10.1101/321216; this version posted May 24, 2018. The copyright holder for this preprint (which was not certified by peer review) is the author/funder, who has granted bioRxiv a license to display the preprint in perpetuity. It is made available under aCC-BY 4.0 International license.

2009 found that all specimens with *M. genitalium* harboured macrolide resistance mutations [9]. In Sweden, where azithromycin has only recently been recommended to treat laboratory diagnosed *M. genitalium* infections, the proportion of azithromycin resistant *M. genitalium* increased in one study from zero in 2006 to 21% in 2011 [10]. The increase in azithromycin resistance can explain a fall in microbiological cure of *M. genitalium*, from around 85% in studies published from 2000 to 2009 to around 67% from 2010 to 2015 [22, 23]. It is not yet clear to what degree the level of treatment failure in *M. genitalium* results from the emergence of *de novo* resistance mutations or the transmission of resistant strains. The objective of this study was to investigate the role of *de novo* emergence of resistance in the spread of azithromycin resistant *M. genitalium*.

Methods

We analysed epidemiological data about the proportion of *M. genitalium* infections with *de novo* mutations conferring macrolide resistance and about trends in the prevalence of *M. genitalium* resistance. We used the findings to inform the development of a mathematical model of the transmission of *M. genitalium*, which we fitted to resistance data. We used *R 3.3.2* [24] for statistical analyses, transmission model simulations and parameter inference. We define *de novo* as a change from a drug-susceptible infection before treatment to a drug-resistant infection after treatment, either by selection of one or a few pre-existing resistant mutants in an otherwise drug-susceptible bacterial population or due to a novel resistance mutation evolving during drug exposure.

bioRxiv preprint doi: https://doi.org/10.1101/321216; this version posted May 24, 2018. The copyright holder for this preprint (which was not certified by peer review) is the author/funder, who has granted bioRxiv a license to display the preprint in perpetuity. It is made available under aCC-BY 4.0 International license.

Epidemiological data

We searched Pubmed in March 2018 and updated the search on 4th May 2018. We used the medical subject headings *Mycoplasma genitalium* AND *drug resistance, bacterial* and found 67 publications. Two authors independently screened the records for original research articles that provided data to address two questions.

1. *Probability of emergence of* de novo *resistance:* we included all studies that investigated patients with *M. genitalium* who received a single 1g dose of azithromycin and who had both pre- and post-treatment specimens tested for macrolide resistance mutations. From each included study we extracted the number of patients with macrolide resistance mutations detected only after treatment and the total number of patients tested. We combined the results from included studies in a meta-analysis. We used the Freeman-Tukey double arcsine transformation and used a random effects model to estimate the average proportion (with 95% confidence intervals, CI) of patients with initially macrolide susceptible *M. genitalium* who had macrolide resistance mutations detected after treatment (*metaprop* function from the R package *meta 4.9*).
2. *Time trend in proportion of azithromycin resistant* M. genitalium *infections*: we identified countries for which data about the proportion of specimens with macrolide resistance mutations from the same region or from an entire country were reported for more than three years. We selected three countries that used different strategies to test and treat *M. genitalium*. For each country, we recorded the region, *M. genitalium* testing strategy and treatment regimen, year in which azithromycin was introduced for the treatment of *M. genitalium* and,

bioRxiv preprint doi: https://doi.org/10.1101/321216; this version posted May 24, 2018. The copyright holder for this preprint (which was not certified by peer review) is the author/funder, who has granted bioRxiv a license to display the preprint in perpetuity. It is made available under aCC-BY 4.0 International license.

for each year, the total number of specimens with positive test results for *M. genitalium* and the number with macrolide resistance mutations. We contacted the study authors if this information was not available in the publication. For each year, we calculated the proportion (with 95% CI) of azithromycin resistant *M. genitalium*.

Mathematical model

We developed a mathematical model that simulates the spread of drug resistance within a population (Figure 1). The model consists of three compartments: susceptibles (S), people infected with a drug-susceptible strain of *M. genitalium* (I_S), and people infected with a drug-resistant strain of *M. genitalium* (I_R).

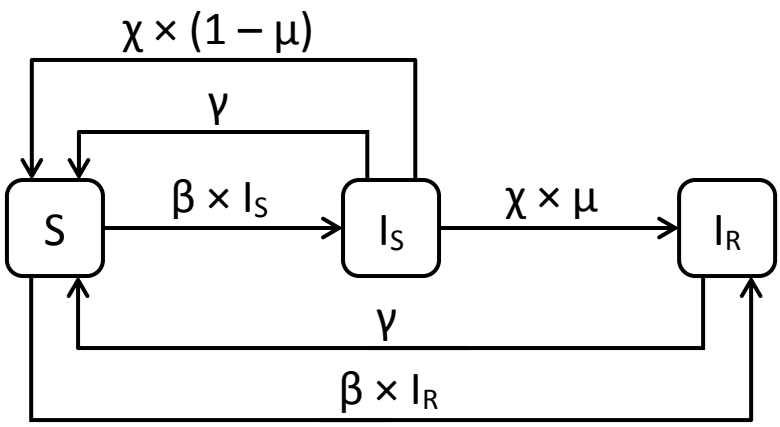

Figure 1. Structure of the epidemiological model for *M. genitalium*.

Assuming a homogenous population without demography, the transmission dynamics can be described by the following ordinary differential equations:

$$\frac{dS}{dt} = -\beta S(I_S + I_R) + \gamma(I_S + I_R) + (1-\mu)\chi I_S \qquad (1)$$

bioRxiv preprint doi: https://doi.org/10.1101/321216; this version posted May 24, 2018. The copyright holder for this preprint (which was not certified by peer review) is the author/funder, who has granted bioRxiv a license to display the preprint in perpetuity. It is made available under aCC-BY 4.0 International license.

$$\frac{dI_S}{dt} = \beta S I_S - (\gamma + \chi) I_S \quad (2)$$

$$\frac{dI_R}{dt} = \beta S I_R - \gamma I_R + \chi \mu I_S \quad (3)$$

where β is the transmission rate, which is assumed to be independent of the type of *M. genitalium* strain. Both types of infections can clear naturally at a rate γ. Patients receive treatment at a rate χ. The treatment rate is defined as all occasions of treatment with a single 1g dose of azithromycin in a person infected with *M. genitalium*, either with or without symptoms. μ denotes the probability of *de novo* resistance emergence during treatment. The *de novo* emergence of resistance also implies that the treatment failed. We used the point estimate of the probability of *de novo* resistance emergence from the meta-analysis. For simplicity, we assumed that there is no second-line treatment for resistant infections, which can thus only clear naturally.

The rate at which the drug-resistant strain replaces the drug-susceptible in a population can be expressed by the difference in the net growth rates ($\Delta\varphi$) between the two strains [27, 28]:

$$\Delta\varphi = \varphi_R - \varphi_S \quad (4)$$

$$\Delta\varphi = \left(\beta S - \gamma + \frac{\chi \mu I_S}{I_R}\right) - (\beta S - \gamma - \chi) \quad (5)$$

$$\Delta\varphi = \chi\left(1 + \frac{\mu I_S}{I_R}\right) \quad (6)$$

Model parameters

The natural clearance rate (γ) of *M. genitalium* infections has not been established and findings from empirical studies are inconsistent [27]. Based on values for other

bioRxiv preprint doi: https://doi.org/10.1101/321216; this version posted May 24, 2018. The copyright holder for this preprint (which was not certified by peer review) is the author/funder, who has granted bioRxiv a license to display the preprint in perpetuity. It is made available under aCC-BY 4.0 International license.

bacterial sexually transmitted infections, the natural clearance rate is likely to be at least in the order of months or years. We set the natural clearance rate γ to 0.8 y^{-1}, a published estimate based on epidemiological data and mathematical modelling [27], and the infection rate ,β, to 0.816 $person^{-1}$ y^{-1}. These values result in an equilibrium prevalence of *M. genitalium* infections of about 2% in the absence of any treatment, which is consistent with estimates of the prevalence of *M. genitalium* in the sexually active population in high-income countries [28, 29]. The values for the natural clearance rate and the prevalence of infection do not govern the relative growth rate of the drug-resistant proportion (Equation 6), so they do not influence the relative prevalence of resistant infections or estimates of the treatment rate in our model. We did not find any published evidence of the effect of macrolide resistance on the fitness of *M. genitalium* strains, so we assumed that any fitness reduction is negligible and that resistant infections have the same infectivity as wild-type infections.

Table 1. Model parameters

Parameter	Description	Value	Source
β	Transmission rate	0.816 $person^{-1}$ y^{-1}	See text
γ	Natural clearance rate	0.8 y^{-1}	[27]
χ	Treatment rate	Estimated	
μ	Probability of *de novo* resistance during treatment	12% (95% CI: 7–17%)	Meta-analysis of [3, 6, 19–21, 29], see Results

Model fitting and simulations

We fitted the transmission model to country-specific resistance data to obtain maximum likelihood estimates of the treatment rate χ and the time point T for the

bioRxiv preprint doi: https://doi.org/10.1101/321216; this version posted May 24, 2018. The copyright holder for this preprint (which was not certified by peer review) is the author/funder, who has granted bioRxiv a license to display the preprint in perpetuity. It is made available under aCC-BY 4.0 International license.

introduction of azithromycin. Given a model-predicted proportion of resistant strains $p_i = \frac{I_R(i)}{I_S(i)+I_S(i)}$ in year *i*, the log-likelihood to find k_i resistant samples in N_i tested individuals is:

$$L(\chi, T) = \sum \left(\log \binom{N_i}{k_i} + k_i \log p_i + (N_i - k_i) \log(1 - p_i) \right). \quad (7)$$

Simulations start at time *T* with 98% uninfected people, 2% people with drug susceptible infections and no people with initial drug-resistant infections, which is the steady state prevalence in our model with our assumed clearance rate and infection rate in the absence of treatment. We used log-transformed parameters for the estimation and stipulated that the upper limit of *T* could not be beyond the time point where resistance was first observed. We derived simulation-based 95% confidence intervals for the model curve from 10,000 bootstrap samples from the multivariate normal distribution of the two parameters.

We also investigated the contribution of the probability of *de novo* resistance emergence to the rise in the proportion of resistant infections by simulating scenarios with probabilities that differed from that estimated in the meta-analysis. First, we kept the model-derived maximum likelihood estimates of χ and *T* but set the probability of *de novo* resistance emergence, μ = 1% or μ = 0.1%. Second, we set the probability of *de novo* resistance emergence, μ = 1% or μ = 0.1% and fitted the model to the time trend data and obtained a new estimate of the treatment rate. We used the *ode* function from the *R* package *deSolve 1.20* to solve the ordinary differential equations, and the *mle2* function from the *R* package *bbmle 1.0.19* using the *Nelder-Mead* method for log-likelihood optimisation.

bioRxiv preprint doi: https://doi.org/10.1101/321216; this version posted May 24, 2018. The copyright holder for this preprint (which was not certified by peer review) is the author/funder, who has granted bioRxiv a license to display the preprint in perpetuity. It is made available under aCC-BY 4.0 International license.

Results

Data

Probability of emergence of de novo *resistance in* M. genitalium

We included six studies that estimated the probability of *de novo* resistance emergence [7, 10, 19–21, 30] (supplementary table 1)**Error! Reference source not found.**. In five out of six studies, amongst patients with wild-type infection before treatment, macrolide resistance mutations were found in all patients with persistent detection of *M. genitalium* after treatment. Ito *et al.* reported three patients who failed treatment while no resistance mutations were detected [30]. In the studies by Anagrius et al. [10] and Falk et al. [20], we excluded three patients each for whom the pre- or post-treatment samples were missing or inconclusive. The summary estimate of the average probability of *de novo* resistance (μ) was 12% (95% CI: 7 – 17%) per treatment, with mild between study heterogeneity.

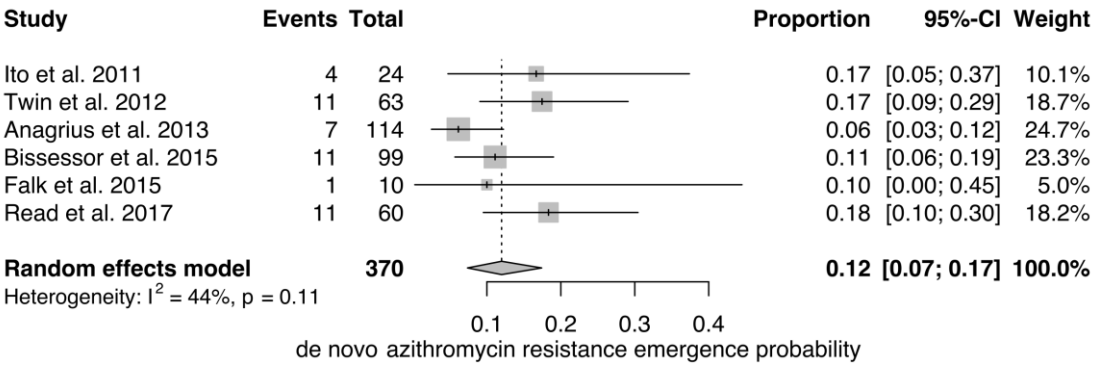

Figure 2. Probability of *de novo* emergence of azithromycin resistance in *M. genitalium*, estimated by random effects meta-analysis of treatment studies reporting pre-treatment susceptibility to azithromycin [7, 10, 19–21, 30]**.**

Time trend in proportion of azithromycin resistant M. genitalium infections

bioRxiv preprint doi: https://doi.org/10.1101/321216; this version posted May 24, 2018. The copyright holder for this preprint (which was not certified by peer review) is the author/funder, who has granted bioRxiv a license to display the preprint in perpetuity. It is made available under aCC-BY 4.0 International license.

We included five studies that provided data about the proportion of azithromycin-resistant *M. genitalium* infections over time and the management of *M. genitalium* infection in France [3, 8, 31], Denmark [13] and Sweden [10] (supplementary table 2). Study authors provided additional information about Denmark, for which data were pooled across consecutive years and Sweden, for which the numbers of patients per year as well as data for 2012 and 2013 were provided [10, 13].

In France, we included three studies with data from 314 patients (310 from Bordeaux) from 2003 to 2012 [3, 8, 31]. None of 17 *M. genitalium* positive specimens from 2003 to 2005 contained macrolide resistance mutations. From 2006 onwards, mutations were detected in 10% to 17% of specimens tested in each year. In France, azithromycin was introduced for first line treatment of NGU in the 1990s [32]. For Denmark, one study reported nationwide data from 1,008 patients with *M. genitalium* detected from 2006 to 2010, with 27% to 42% of specimens containing macrolide resistance mutations [13]. In Denmark, 1g single dose azithromycin is routinely prescribed for treatment of NGU; erythromycin was the first line treatment before azithromycin became available. An extended azithromycin regimen is prescribed if a *M. genitalium* infection was diagnosed and NAAT for detection of *M. genitalium* infections have been available since 2003 [13]. In Sweden, we analysed one study with data about macrolide resistance mutations from 408 samples obtained from 2006 to 2013 from patients at a single clinic in Falun [10]. Macrolide resistance mutations were first detected in a single specimen in 2008 and increased to 16% of 95 specimens in 2011. In Sweden, doxycycline is used as first line treatment for NGU [18, 32]. Azithromycin is used only when *M. genitalium* is

bioRxiv preprint doi: https://doi.org/10.1101/321216; this version posted May 24, 2018. The copyright holder for this preprint (which was not certified by peer review) is the author/funder, who has granted bioRxiv a license to display the preprint in perpetuity. It is made available under aCC-BY 4.0 International license.

identified as the cause, with testing introduced in the 2000s [10].

Model

The transmission model fitted the increase in *M. genitalium* resistance in France, Denmark and Sweden well (Figure 3). Our analysis shows that the rise in the proportion of azithromycin resistant *M. genitalium* infections in all three countries was consistent with *de novo* emergence of macrolide resistance mutations in about 12% of initially wild-type infections. In the alternative scenarios, with the same estimated treatment rate, a lower probability of *de novo* resistance resulted in proportions of resistant *M. genitalium* infections below the lower confidence interval boundary of the observed data.

The model estimated treatment rate and date of introduction of azithromycin were: France, treatment rate 0.07 y^{-1} (95% CI: 0.02 – 0.18 $person^{-1}$ y^{-1}), introduction of azithromycin in May 2000 (95% CI: October 1986 – June 2005); Denmark, treatment rate of 0.13 y^{-1} (95% CI: 0.05 – 0.34 $person^{-1}$ y^{-1}), introduction of azithromycin in August 1996 (95% CI: November 1976 – January 2004); Sweden, treatment rate 0.14 y^{-1} (95% CI: 0.11 – 0.17 $person^{-1}$ y^{-1}), introduction of azithromycin July 2006 (95% CI: January 2006 – November 2006). We also fitted the model to the data while assuming *de novo* resistance emergence probabilities of 1% or 0.1%, which resulted in higher estimated treatment rates and a lower goodness of fit (supplementary table 3).

bioRxiv preprint doi: https://doi.org/10.1101/321216; this version posted May 24, 2018. The copyright holder for this preprint (which was not certified by peer review) is the author/funder, who has granted bioRxiv a license to display the preprint in perpetuity. It is made available under aCC-BY 4.0 International license.

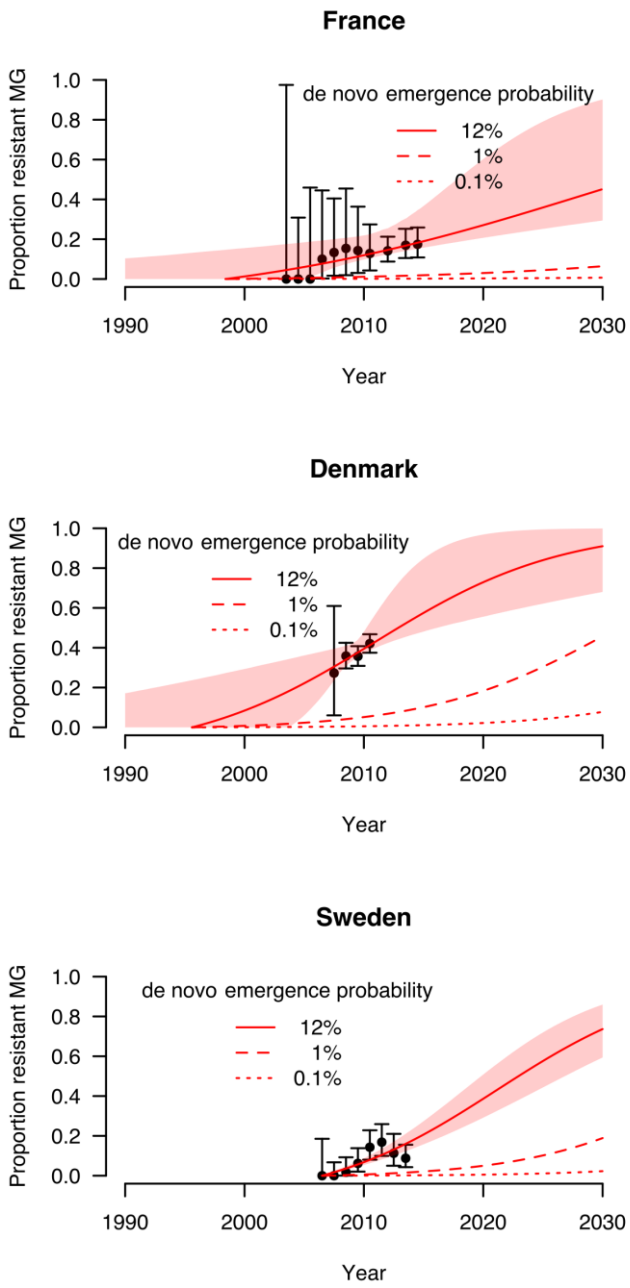

Figure 3. Maximum likelihood fits (solid red lines) of the transmission model to the data of the relative prevalence of azithromycin resistant *M. genitalium* infections in France, Denmark and Sweden over time. The black data points correspond to reported proportions of resistant infections [3, 8, 10, 13, 31] **(additional data from Denmark and Sweden provided by study authors). The error bars indicate the 95% confidence intervals. The red area is the 95% confidence interval of the model predictions. The dashed and dotted lines are simulations with probabilities of *de novo* emergence of resistance of 1% and 0.1% respectively, but with the treatment rate and time point of introduction obtained from the model fit.**

Figure 4 shows the relationship between the growth rate of the proportion of drug-

bioRxiv preprint doi: https://doi.org/10.1101/321216; this version posted May 24, 2018. The copyright holder for this preprint (which was not certified by peer review) is the author/funder, who has granted bioRxiv a license to display the preprint in perpetuity. It is made available under aCC-BY 4.0 International license.

resistant *M. genitalium* infections ($\Delta\varphi$) and the proportion of resistant infections for various treatment rates. The probability of *de novo* resistance emergence increases the growth rate of resistant infections across different initial values for the proportion of resistant infections. The relationship between $\Delta\varphi$ and the proportion of resistant infections explains some of the dynamics of resistance spread. The growth advantage conferred by *de novo* emergence of resistant strains is always greatest at the time of introduction of antibiotic treatment, when the proportion of resistant strains is lowest.

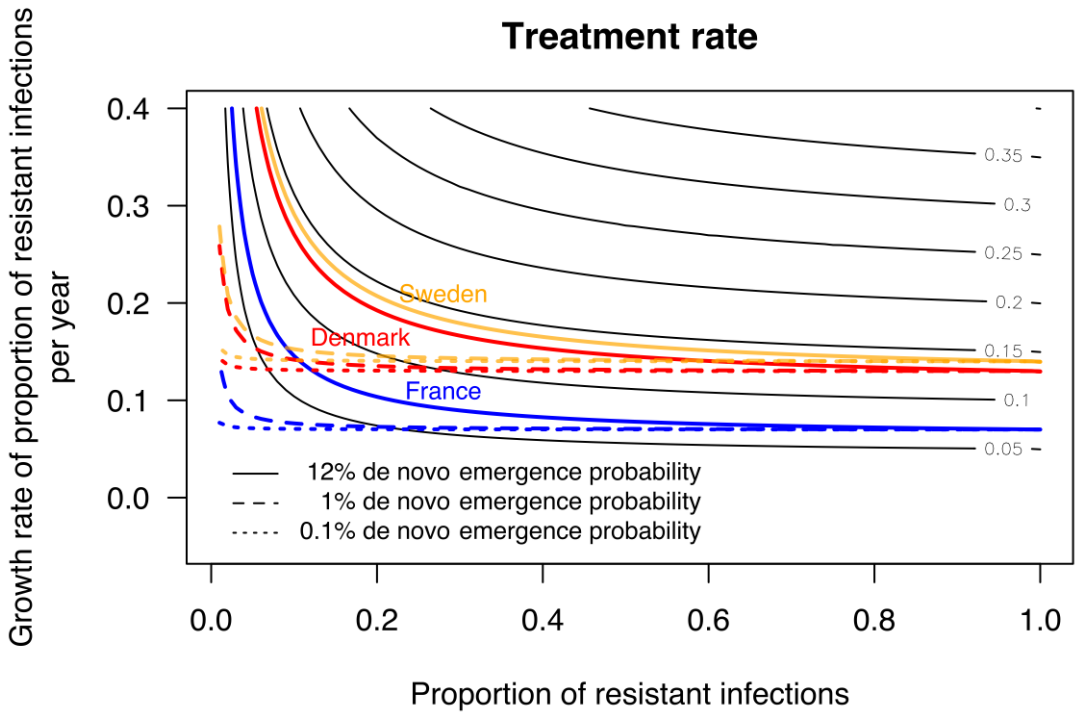

Figure 4. Relationship between the growth rate of the drug-resistant proportion of *M. genitalium* infections and the proportion of resistant infections for various treatment rates. The coloured solid lines show the growth rate for France (blue), Denmark (red), and Sweden (yellow) in the model with 12% probability of *de novo* emergence of drug resistance. The dashed and dotted lines are the growth rate in a model that uses the same treatment rate but probabilities of *de novo* emergence of resistance of 1% and 0.1% respectively.

bioRxiv preprint doi: https://doi.org/10.1101/321216; this version posted May 24, 2018. The copyright holder for this preprint (which was not certified by peer review) is the author/funder, who has granted bioRxiv a license to display the preprint in perpetuity. It is made available under aCC-BY 4.0 International license.

As the resistant strains spreads, the growth advantage diminishes, slowly approaching $\Delta\varphi = \chi$ according to Equation (6). Thus, the growth acceleration of resistant strains provided by *de novo* resistance reduces as the resistant strain spreads through the pathogen population. The curves for which we assumed a lower probability of *de novo* emergence or resistance are substantially flatter than the curve that results from the probability of *de novo* resistance estimated from the data.

Discussion

In this study, we obtained a summary estimate of the probability of *de novo* resistance of 12% (95% CI: 7 – 17%, 6 studies, I^2 44%). In our model, applying this probability of *de novo* emergence of resistance during azithromycin therapy could explain observed increases in the proportion of azithromycin resistant *M. genitalium* infections in France, Denmark and Sweden. Lower probabilities of *de novo* resistance emergence, given the same estimated treatment rates, were not consistent with the observed data. Model-based estimates of the approximate time point of introduction of azithromycin were consistent with published descriptions.

Strengths and weaknesses

A strength of this study is the use of empirical data sources and mathematical modelling. We established a compartmental model to simulate the population dynamics of the spread of resistant *M. genitalium* and gathered the necessary parameter values from the literature. We obtained our estimate of the probability of *de novo* resistance from a systematic review and meta-analysis of six studies.

bioRxiv preprint doi: https://doi.org/10.1101/321216; this version posted May 24, 2018. The copyright holder for this preprint (which was not certified by peer review) is the author/funder, who has granted bioRxiv a license to display the preprint in perpetuity. It is made available under aCC-BY 4.0 International license.

Parameters that were not available in the literature were estimated by fitting the model to observational data from France, Denmark, and Sweden, including unpublished data. Comparing the data and model estimates for those countries also enabled us to compare the outcome of treatment strategies for NGU and *M. genitalium* infections. Despite its simplicity, the model assumptions provide a coherent qualitative explanation for the quantitative description of the clinically observed rapid rise of macrolide resistant *M. genitalium* infections.

There are some caveats to both the observational data sources and the model. First, owing to the small number of samples for each data point, particularly for early years, confidence intervals for those estimates of the proportion of resistant infections are wide. In Denmark, azithromycin has been used for a long time but data about the prevalence of drug resistant infections were only available since 2006, which introduces more uncertainty in the estimated point at which resistance emerged. Second, the characteristics of people tested for *M. genitalium* in the three countries are not well described and differences in testing practices between countries might account for some of the variation in the proportions with macrolide resistance. An increase over time in the proportion of resistant infections was, however, observed in all three countries. We used a relatively simple transmission model, so we made several simplifying assumptions. First, we assumed that treatment rates in each country were constant over time and did not account for the possibility that azithromycin use might have risen over time. Second, we assumed that no second line treatments were used for resistant *M. genitalium* infections. If we implemented treatment of resistant infections, our estimates for the initial

bioRxiv preprint doi: https://doi.org/10.1101/321216; this version posted May 24, 2018. The copyright holder for this preprint (which was not certified by peer review) is the author/funder, who has granted bioRxiv a license to display the preprint in perpetuity. It is made available under aCC-BY 4.0 International license.

treatment rate for susceptible infections would have been somewhat higher. In practice, since most *M. genitalium* infections are asymptomatic and diagnostic testing is still uncommon, we do not think that this simplification affected our conclusions. Third, our model does not include detailed population structure because the rate at which the relative proportion of resistant bacterial strains spread in a population can often be explained by the treatment rate, rather than the sexual network structure [26]. More complex models with different sexes, partner change rates, age structure, and a better understanding of the average infectious duration of *M. genitalium*, would be necessary to obtain a better description of the absolute prevalence of infections and resistance, but this was not the objective of this study.

Interpretation and comparison with other studies

This study strongly suggests that, rather than resulting in 'occasional treatment failure' as originally believed [18], the development of *de novo* resistant mutations in 12% (95% CI: 7 – 17%) of *M. genitalium* infections is the main driver of azithromycin resistance. The data from France and Sweden [3, 8, 10, 31], where no macrolide resistant mutations were detected initially, show a substantial proportion of diagnosed *M. genitalium* infections with azithromycin resistance after just a few years of azithromycin use. Our model shows that a high *de novo* resistance acquisition rate contributes considerably to the spread of resistance, particularly during the early stages of its occurrence. The effect then decreases as the proportion of resistant infections increases. This pattern contrasts with a scenario in which resistance emerges with a lower probability. Then, the effect on the growth rate would be substantially smaller and the growth dynamics of the drug resistant

bioRxiv preprint doi: https://doi.org/10.1101/321216; this version posted May 24, 2018. The copyright holder for this preprint (which was not certified by peer review) is the author/funder, who has granted bioRxiv a license to display the preprint in perpetuity. It is made available under aCC-BY 4.0 International license.

proportion are much closer to a logistic growth model. Assuming the same treatment rate, this growth dynamic would require much more time to reach the levels of resistance that we observed in France, Denmark and Sweden. We have not found any other mathematical modelling studies that have investigated the role of *de novo* mutations in the spread of antimicrobial resistant *M. genitalium*. Our model-predicted estimates of the introduction of azithromycin for the treatment of NGU were consistent with published data describing its use in France [32] and Denmark in the 1990s, but later introduction in Sweden [10]. Our estimated treatment rate for France was lower than those for Denmark and Sweden but the 95% confidence intervals of all three estimates overlap. The estimated rates in Sweden and Denmark are very close to those estimated in another epidemiological model of *M. genitalium* infections in the United Kingdom [34].

The high probability of *de novo* emergence of macrolide resistance mutations during treatment of *M. genitalium* infections appears to differ from experiences with some other sexually transmitted bacterial infections. A 1g dose of azithromycin might often be insufficient to eradicate a *M. genitalium* infection in concert with host immune responses, allowing for either a resistance mutation to occur in the single 23S rRNA operon during treatment or the survival of a few pre-existing drug-resistant bacteria and the subsequent selection of the mutants. The latter explanation is favoured by the strong association with *de novo* resistance and high organism load [19, 21, 35], but both mechanisms may play a role. In the absence of any observable fitness cost, or of routine tests to detect macrolide resistance mutations, resistance to azithromycin has emerged and spread rapidly. In contrast,

bioRxiv preprint doi: https://doi.org/10.1101/321216; this version posted May 24, 2018. The copyright holder for this preprint (which was not certified by peer review) is the author/funder, who has granted bioRxiv a license to display the preprint in perpetuity. It is made available under aCC-BY 4.0 International license.

selection pressure exerted by treatment and clonal spread are the major drivers of the spread of antimicrobial resistant *Neisseria gonorrhoeae,* with *de novo* resistance considered to be negligible [26]. *N. gonorrhoeae* has four copies of the 23S rRNA gene and resistance increases with the number of mutated copies [36]. In addition, active measures, such as combination therapy with ceftriaxone, are used to limit the potential for the emergence of *de novo* macrolide resistance in *N. gonorrhoeae*. Azithromycin resistance is also recognised in *Treponema pallidum* [37] but azithromycin monotherapy is not recommended as treatment for syphilis. Transmitted resistance is assumed to be responsible for most antimicrobial resistance, but a high rate of *de novo* resistance emergence has been observed during treatment with various antibiotics of other bacterial infections, such as *Pseudomonas aeruginosa* and *Enterobacteriaceae* [38–40]. In general, *de novo* selection of drug-resistant mutants within a single patient occurs more often if the resistance is mediated by single-base mutations than if acquisition of efflux pumps or other complex mechanism are needed [41]. Thus, it is distinct from the selection of drug resistance as a result of treatment at the population level which is more often transmitted; a situation which is seen with most other bacterial and parasitic sexually transmitted infections.

Implications for research and practice

The high level of azithromycin resistance in *M. genitalium*, driven by *de novo* resistance, poses problems for clinical management and population level control strategies [42]. There is an absence of evidence that screening for asymptomatic *M. genitalium* would be beneficial [42]. The focus should be on strategies to improve

bioRxiv preprint doi: https://doi.org/10.1101/321216; this version posted May 24, 2018. The copyright holder for this preprint (which was not certified by peer review) is the author/funder, who has granted bioRxiv a license to display the preprint in perpetuity. It is made available under aCC-BY 4.0 International license.

surveillance of antimicrobial resistant *M. genitalium* infections and to improve the management of symptomatic infection, whilst minimising the emergence of resistance. Calls to abandon treatment of uncomplicated NGU with single dose azithromycin [23, 43–45] and to return to doxycycline [46] are increasing. Despite concerns about limited efficacy of doxycycline, a large randomised controlled trial conducted in the US from 2007 to 2011 found that both clinical and microbiological cure rates for doxycycline and azithromycin were comparable [47]. Evidence for the effectiveness of higher doses or extended regimens of azithromycin is mixed and the proportions of patients that develop macrolide resistance mutations with single dose and a five-day regimen were comparable in one study [21]. Resistance to second line treatment with the fluoroquinolone moxifloxacin is also increasing. New antimicrobials or combination therapy that might have a lower propensity for the emergence of *de novo* resistance are being investigated [48]. Implementation of clinical guidelines could help to improve consistent management. The first European guidelines for the management of *M. genitalium* and updated guidelines for NGU [46, 49], both published in 2016, recommend that a test to detect macrolide resistance mutations should accompany diagnostic testing for *M. genitalium*. Large trials are now needed to determine whether treatment regimens and algorithms, based on the results of resistance testing and follow-up tests of cure, can reduce the emergence of *M. genitalium* resistance. Since *de novo* mutations are the main driver of azithromycin resistance in *M. genitalium*, clinical management strategies should seek to limit the unnecessary use of macrolides.

bioRxiv preprint doi: https://doi.org/10.1101/321216; this version posted May 24, 2018. The copyright holder for this preprint (which was not certified by peer review) is the author/funder, who has granted bioRxiv a license to display the preprint in perpetuity. It is made available under aCC-BY 4.0 International license.

Acknowledgement

We would like to thank Carin Anagrius from the Falu lasarett in Falun, Sweden and Kirsten Salado-Rasmussen from the Bispebjerg Hospital in Copenhagen, Denmark for providing us with additional unpublished data.

Funding sources

This study was funded by the Epidemiology and Mathematical Modelling in Infectious Diseases Control (EpideMMIC project), Swiss National Science Foundation project grant number 32003B_160320.

References

[1] Shimada Y, Deguchi T, Nakane K, Yasuda M, Yokoi S, Ito S, et al. Macrolide Resistance-associated 23S rRNA Mutation in Mycoplasma genitalium, Japan. Emerg Infect Dis 2011;17:1148–9. doi:10.3201/eid1706.101055.

[2] Yew H Sen, Anderson T, Coughlan E, Werno A. Induced Macrolide Resistance in Mycoplasma genitalium Isolates from Patients with Recurrent Nongonococcal Urethritis. J Clin Microbiol 2011;49:1695–6. doi:10.1128/JCM.02475-10.

[3] Touati A, Peuchant O, Jensen JS, Bébéar C, Pereyrea S. Direct Detection of Macrolide Resistance in Mycoplasma genitalium Isolates from Clinical Specimens from France by Use of Real-Time PCR and Melting Curve Analysis. J Clin Microbiol 2014;52:1549–55. doi:10.1128/JCM.03318-13.

[4] Nijhuis RHT, Severs TT, Van der Vegt DSJM, Van Zwet AA, Kusters JG. High levels of macrolide resistance-associated mutations in Mycoplasma genitalium warrant antibiotic susceptibility-guided treatment. J Antimicrob Chemother 2015;70:2515–8. doi:10.1093/jac/dkv136.

[5] Björnelius E, Magnusson C, Jensen JS. Mycoplasma genitalium macrolide resistance in Stockholm, Sweden. Sex Transm Infect 2016;93:167–8. doi:10.1136/sextrans-2016-052688.

[6] Murray GL, Bradshaw CS, Bissessor M, Danielewski J, Garland SM, Jensen JS, et al. Increasing Macrolide and Fluoroquinolone Resistance in Mycoplasma genitalium. Emerg Infect Dis 2017;23:809–12.

bioRxiv preprint doi: https://doi.org/10.1101/321216; this version posted May 24, 2018. The copyright holder for this preprint (which was not certified by peer review) is the author/funder, who has granted bioRxiv a license to display the preprint in perpetuity. It is made available under aCC-BY 4.0 International license.

[7] Twin J, Jensen JS, Bradshaw CS, Garland SM, Fairley CK, Min LY, et al. Transmission and Selection of Macrolide Resistant Mycoplasma genitalium Infections Detected by Rapid High Resolution Melt Analysis. PLoS One 2012;7:e35593. doi:10.1371/journal.pone.0035593.

[8] Chrisment D, Charron A, Cazanave C, Pereyre S, Bébéar C. Detection of macrolide resistance in Mycoplasma genitalium in France. J Antimicrob Chemother 2012;67:2598–601. doi:10.1093/jac/dks263.

[9] Gesink DC, Mulvad G, Montgomery-Andersen R, Poppel U, Montgomery-Andersen S, Binzer A, et al. Mycoplasma genitalium presence, resistance and epidemiology in Greenland. Int J Circumpolar Health 2012;71:1–8. doi:10.3402/ijch.v71i0.18203.

[10] Anagrius C, Loré B, Jensen JS. Treatment of Mycoplasma genitalium. Observations from a Swedish STD Clinic. PLoS One 2013;8:e61481. doi:10.1371/ journal.pone.0061481.

[11] Tagg KA, Jeoffreys NJ, Couldwell DL, Donald JA, Gilbert GL. Fluoroquinolone and Macrolide Resistance-Associated Mutations in Mycoplasma genitalium. J Clin Microbiol 2013;51:2245–9. doi:10.1128/JCM.00495-13.

[12] Couldwell DL, Tagg KA, Jeoffreys NJ, Gilbert GL. Failure of moxifloxacin treatment in Mycoplasma genitalium infections due to macrolide and fluoroquinolone resistance. Int J STD AIDS 2013;24:822–8. doi:10.1177/0956462413502008.

[13] Salado-Rasmussen K, Jensen JS. Mycoplasma genitalium Testing Pattern and Macrolide Resistance: A Danish Nationwide Retrospective Survey. Clin Infect Dis 2014;59:24–30. doi:10.1093/cid/ciu217.

[14] Pond MJ, Nori A V, Witney AA, Lopeman RC, Butcher PD, Sadiq ST. High prevalence of antibiotic-resistant mycoplasma genitalium in nongonococcal urethritis: The need for routine testing and the inadequacy of current treatment options. Clin Infect Dis 2014;58:631–7. doi:10.1093/cid/cit752.

[15] Taylor-Robinson D, Jensen JS. Mycoplasma genitalium: from Chrysalis to Multicolored Butterfly. Clin Microbiol Rev 2011;24:498–514. doi:10.1128/CMR.00006-11.

[16] Cazanave C, Manhart LE, Bébéar C. Mycoplasma genitalium, an emerging sexually transmitted pathogen. Médecine Mal Infect 2012;42:381–92. doi:10.1016/j.medmal.2012.05.006.

[17] Centers for Disease Control and Prevention. 1998 Guidelines for Treatment of Sexually Transmitted Diseases. MMWR 1998;47(RR-1):1-118.

[18] Jensen JS, Bradshaw CS, Tabrizi SN, Fairley CK, Hamasuna R. Azithromycin Treatment Failure in Mycoplasma genitalium–Positive Patients with Nongonococcal Urethritis Is Associated with Induced Macrolide Resistance. Clin Infect Dis 2008;47:1546–53. doi:10.1086/593188.

[19] Bissessor M, Tabrizi SN, Twin J, Abdo H, Fairley CK, Chen MY, et al. Macrolide Resistance and Azithromycin Failure in a Mycoplasma genitalium-Infected

bioRxiv preprint doi: https://doi.org/10.1101/321216; this version posted May 24, 2018. The copyright holder for this preprint (which was not certified by peer review) is the author/funder, who has granted bioRxiv a license to display the preprint in perpetuity. It is made available under aCC-BY 4.0 International license.

Cohort and Response of Azithromycin Failures to Alternative Antibiotic Regimens. Clin Infect Dis 2015;60:1228–36. doi:10.1093/cid/ciu1162.

[20] Falk L, Enger M, Jensen JS. Time to eradication of Mycoplasma genitalium after antibiotic treatment in men and women. J Antimicrob Chemother 2015;70:3134–40. doi:10.1093/jac/dkv246.

[21] Read TRH, Fairley CK, Tabrizi SN, Bissessor M, Vodstrcil L, Chow EPF, et al. Azithromycin 1.5g Over 5 Days Compared to 1g Single Dose in Urethral Mycoplasma genitalium: Impact on Treatment Outcome and Resistance. Clin Infect Dis 2017;64:250–6. doi:10.1093/cid/ciw719.

[22] Jensen JS. Mycoplasma genitalium: yet another challenging STI. Lancet Infect Dis 2017;17:795–6. doi:10.1016/S1473-3099(17)30364-X.

[23] Lau A, Bradshaw CS, Lewis D, Fairley CK, Chen MY, Kong FYS, et al. The efficacy of azithromycin for the treatment of genital mycoplasma genitalium: A systematic review and meta-analysis. Clin Infect Dis 2015;61:1389–99. doi:10.1093/cid/civ644.

[24] R (programming language) for Mac OS X 2018. https://www.r-project.org/.

[25] Bonhoeffer S, Lipsitch M, Levin BR. Evaluating treatment protocols to prevent antibiotic resistance. PNAS Proc Natl Acad Sci United States Am 1997;94:12106–11.

[26] Fingerhuth SM, Bonhoeffer S, Low N, Althaus CL. Antibiotic-Resistant Neisseria gonorrhoeae Spread Faster with More Treatment, Not More Sexual Partners. PLoS Pathog 2016;12:1–15. doi:10.1371/journal.ppat.1005611.

[27] Smieszek T, White PJ. Apparently-Different Clearance Rates from Cohort Studies of Mycoplasma genitalium Are Consistent after Accounting for Incidence of Infection, Recurrent Infection, and Study Design. PLoS One 2016;11:1–18. doi:10.1371/journal.pone.0149087.

[28] Sonnenberg P, Ison CA, Clifton S, Field N, Tanton C, Soldan K, et al. Epidemiology of Mycoplasma genitalium in British men and women aged 16-44 years: Evidence from the third National Survey of Sexual Attitudes and Lifestyles (Natsal-3). Int J Epidemiol 2015;44:1982–94. doi:10.1093/ije/dyv194.

[29] Baumann L, Cina M, Egli-Gany D, Goutaki M, Halbeisen FS, Lohrer G-R, et al. Prevalence of Mycoplasma genitalium in different population groups: systematic review and meta-analysis. Sex Transm Infect 2018. doi:10.1136/sextrans-2017-053384.

[30] Ito S, Shimada Y, Yamaguchi Y, Yasuda M, Yokoi S, Ito SI, et al. Selection of Mycoplasma genitalium strains harbouring macrolide resistance-associated 23S rRNA mutations by treatment with a single 1 g dose of azithromycin. Sex Transm Infect 2011;87:412–4. doi:10.1136/sextrans-2011-050035.

[31] Le Roy C, Hénin N, Pereyre S, Bébéar C. Fluoroquinolone-Resistant Mycoplasma genitalium, Southwestern France. Emerg Infect Dis 2016;22:1677–9. doi:10.3201/eid2209.160446.

bioRxiv preprint doi: https://doi.org/10.1101/321216; this version posted May 24, 2018. The copyright holder for this preprint (which was not certified by peer review) is the author/funder, who has granted bioRxiv a license to display the preprint in perpetuity. It is made available under aCC-BY 4.0 International license.

[32] Joly-Guillou M-L, Lasry S. Practical Recommendations for the Drug Treatment of Bacterial Infections of the Male Genital Tract Including Urethritis, Epididymitis and Prostatitis. Drugs 1999;57:743–50. doi:10.2165/00003495-199957050-00007.

[33] Johannisson G, Enström Y, Löwhagen G-B, Nagy V, Ryberg K, Seeberg S, et al. Occurrence and treatment of Mycoplasma genitalium in patients visiting STD clinics in Sweden. Int J STD AIDS 2000;11:324–6. doi:10.1258/0956462001915958.

[34] Birger R, Saunders J, Estcourt C, Sutton AJ, Mercer CH, Roberts T, et al. Should we screen for the sexually-transmitted infection Mycoplasma genitalium? Evidence synthesis using a transmission-dynamic model. Sci Rep 2017;7:16162. doi:10.1038/s41598-017-16302-8.

[35] Walker J, Fairley CK, Bradshaw CS, Tabrizi SN, Twin J, Chen MY, et al. Mycoplasma genitalium Incidence, Organism Load, and Treatment Failure in a Cohort of Young Australian Women. Clin Infect Dis 2013;56:1094–100. doi:10.1093/cid/cis1210.

[36] Unemo M, Shafer WM. Antimicrobial resistance in Neisseria gonorrhoeae in the 21st Century: Past, evolution, and future. Clin Microbiol Rev 2014;27:587–613. doi:10.1128/CMR.00010-14.

[37] Lukehart SA, Godornes C, Molini BJ, Sonnett P, Hopkins S, Mulcahy F, et al. Macrolide Resistance in Treponema pallidum in the United States and Ireland. N Engl J Med 2004;351:154–8.

[38] Milatovic D, Braveny I. Development of Resistance during Antibiotic Therapy. Eur J Clin Microbiol 1987;6:234–44. doi:10.1007/BF02017607.

[39] Chow JW, Fine MJ, Shlaes DM, Quinn JP, Hooper DC, Johnson MP, et al. Enterobacter Bacteremia: Clinical Features and Emergence of Antibiotic Resistance during Therapy. Ann Intern Med 1991;115:585–90. doi:10.7326/0003-4819-115-8-585.

[40] Carmeli Y, Troillet N, Eliopoulos GM, Samore MH. Emergence of Antibiotic-Resistant Pseudomonas aeruginosa : Comparison of Risks Associated with Different Antipseudomonal Agents. Antimicrob Agents Chemother 1999;43:1379–82.

[41] Unemo M, Jensen JS. Antimicrobial-resistant sexually transmitted infections: gonorrhoea and Mycoplasma genitalium. Nat Rev Urol 2017;14:139–52. doi:10.1038/nrurol.2016.268.

[42] Golden MR, Workowski KA, Bolan G. Developing a Public Health Response to Mycoplasma genitalium. J Infect Dis 2017;216:S420–6. doi:10.1093/infdis/jix200.

[43] Horner P, Blee K, Adams E. Time to manage Mycoplasma genitalium as an STI: but not with azithromycin 1g! Curr Opin Infect Dis 2014;27:68–74. doi:10.1097/QCO.0000000000000030.

[44] Horner PJ, Ingle S, Blee K, Muir P, Moi H. Treatment of Mycoplasma

bioRxiv preprint doi: https://doi.org/10.1101/321216; this version posted May 24, 2018. The copyright holder for this preprint (which was not certified by peer review) is the author/funder, who has granted bioRxiv a license to display the preprint in perpetuity. It is made available under aCC-BY 4.0 International license.

genitalium with Azithromycin 1g Is Less Efficacious and Associated with Induction of Macrolide Resistance Compared to a 5-day Regimen. Sex Transm Infect 2015;91:A148. doi:10.1136/sextrans-2015-052126.28.

[45] Horner P, Saunders J. Should azithromycin 1g be abandoned as a treatment for bacterial STIs? the case for and against. Sex Transm Infect 2017;93:85–7. doi:10.1136/sextrans-2015-052414.

[46] Horner PJ, Blee K, Falk L, van der Meijden W, Moi H. 2016 European guideline on the management of non-gonococcal urethritis. Int J STD AIDS 2016;27:928–37. doi:10.1177/0956462416648585.

[47] Manhart LE, Gillespie CW, Lowens MS, Khosropour CM, Colombara D V, Golden MR, et al. Standard Treatment Regimens for Nongonococcal Urethritis Have Similar but Declining Cure Rates: A Randomized Controlled Trial. Clin Infect Dis 2013;56:934–42. doi:10.1093/cid/cis1022.

[48] Bradshaw CS, Jensen JS, Waites KB. New Horizons in Mycoplasma genitalium Treatment. J Infect Dis 2017;216:S412–9. doi:10.1093/infdis/jix132.

[49] Jensen JS, Cusini M, Gomberg M, Moi H. 2016 European guideline on Mycoplasma genitalium infections. J Eur Acad Dermatology Venereol 2016;30:1650–6. doi:10.1111/jdv.13849.