De novo mutations drive the spread of macrolide-resistant *Mycoplasma genitalium*: a mathematical modelling study

Dominique Cadosch[1], Victor Garcia[1 2], Christian L. Althaus[1], Jørgen Skov Jensen[3], Nicola Low[1]

1. Institute of Social and Preventive Medicine, University of Bern, Switzerland,
2. School of Life Sciences and Facility Management, Zurich University of Applied Sciences, Switzerland,
3. Research Unit for Reproductive Tract Microbiology, Statens Serum Institut, Copenhagen, Denmark.

Running title: Macrolide-resistant *Mycoplasma genitalium*

Abstract word count: 199

Main text word count: 3486

Abstract

Background: The rapid spread of azithromycin resistance in sexually transmitted *Mycoplasma genitalium* infections is a growing concern. It is not yet clear to what degree macrolide resistance in *M. genitalium* results from the emergence of de novo mutations or the transmission of resistant strains.

Methods: We analyzed epidemiological data and developed a compartmental model to investigate the contribution of de novo macrolide resistance mutations to the spread of antimicrobial-resistant *M. genitalium*. We fitted the model to data from France, Denmark and Sweden and estimated treatment rates of infected individuals and the time point of azithromycin introduction.

Results: We found a high probability of de novo resistance (12%, 95% CI 8–17%), which is responsible for the observed rapid spread of antimicrobial resistant *M. genitalium*. The estimated per capita treatment rate in France was lower than in Denmark and Sweden but confidence intervals for the three estimates overlap. The estimated dates of introduction of azithromycin in each country are consistent with published reports.

Conclusions: Since de novo resistance is the main driver of macrolide resistance in *M. genitalium*, blind treatment of urethritis with azithromycin is not recommended. Clinical management strategies for *M. genitalium* should limit the unnecessary use of macrolides.

Key words: Mycoplasma genitalium; sexually transmitted infections; drug resistance

39 # Introduction

40 Macrolide-resistant *Mycoplasma genitalium* already accounts for 40% or more of
41 detected infections in some countries [1–4]. *M. genitalium* is a sexually transmitted
42 bacterium which, together with *Chlamydia trachomatis*, causes non-gonococcal
43 urethritis (NGU) in men [5] and lower and upper genital tract disease in women [6].
44 *M. genitalium* is detected using nucleic acid amplification tests (NAATs) [7], which
45 were first developed during the 1990s as research tools because the bacterium is
46 slow-growing and hard to culture. In most clinical settings, NAATs for *M. genitalium*
47 diagnosis are not available. The clinical syndrome of NGU is treated empirically, with
48 a single 1g dose of azithromycin, recommended for first line treatment in many
49 countries since the late 1990s [8].

50 Macrolide resistance in *M. genitalium* results from a single nucleotide mutation in
51 region V of the 23S rRNA gene, most commonly A2058G or A2059G. Jensen et al.
52 identified these mutations in Australian and Swedish men, with NGU caused by *M.*
53 *genitalium*, who experienced clinical treatment failure with 1g azithromycin [9]. The
54 men carried a wild-type organism before treatment, but post-treatment specimens
55 contained mutations in the 23S rRNA gene that conferred macrolide resistance [9].
56 Since then, other investigators have detected macrolide resistance mutations de
57 novo (also known as acquired, induced or selected) in *M. genitalium* [10–15]. Once
58 acquired, untreated resistant strains can be transmitted to new sexual partners.

59 Recommendations for future research on *M. genitalium* prioritize the need for more
60 effective and safe antimicrobials [16]. It is important to understand the degree to

61 which treatment failure in *M. genitalium* results from the emergence of de novo
62 resistance mutations or the transmission of resistant strains because the type of
63 resistance will influence future strategies. The objective of this study was to
64 investigate the role of de novo emergence of resistance in the spread of
65 azithromycin-resistant *M. genitalium*.

66 # Methods

67 We developed a mathematical model of *M. genitalium* transmission and fitted it to
68 epidemiological data about time trends in macrolide resistance. We define 'de novo'
69 as a change from a drug-susceptible infection before treatment to a drug-resistant
70 infection after treatment, either by selection of one or a few pre-existing resistant
71 mutants in an otherwise drug-susceptible bacterial population or due to a novel
72 resistance mutation evolving during drug exposure. We used *R 3.3.2* for statistical
73 analyses, transmission model simulations and parameter inference.

74 **Epidemiological data**

75 We searched Pubmed in March 2018 and updated the search on 4th May 2018. We
76 used the medical subject headings *Mycoplasma genitalium* AND *drug resistance,*
77 *bacterial* and found 67 publications. Two authors independently searched for
78 countries with multiple studies that reported on *M. genitalium* and macrolide
79 resistance mutations. We selected three countries with data for more than three
80 years from the same region or an entire country, and which used different strategies
81 to test and treat *M. genitalium*. For each country, we recorded the testing strategy
82 and treatment regimen, year in which azithromycin was introduced for *M.*

genitalium treatment, numbers of specimens with positive results for *M. genitalium* and the number with macrolide resistance mutations. We contacted study authors for additional information. For each year, we calculated the proportion (with 95% CI) of azithromycin-resistant *M. genitalium*.

Mathematical model

We developed a mathematical model that simulates the spread of drug resistance within a population (Figure 1). The model consists of three compartments: susceptibles (S), people infected with a drug-susceptible strain of *M. genitalium* (I_S), and people infected with a drug-resistant strain of *M. genitalium* (I_R).

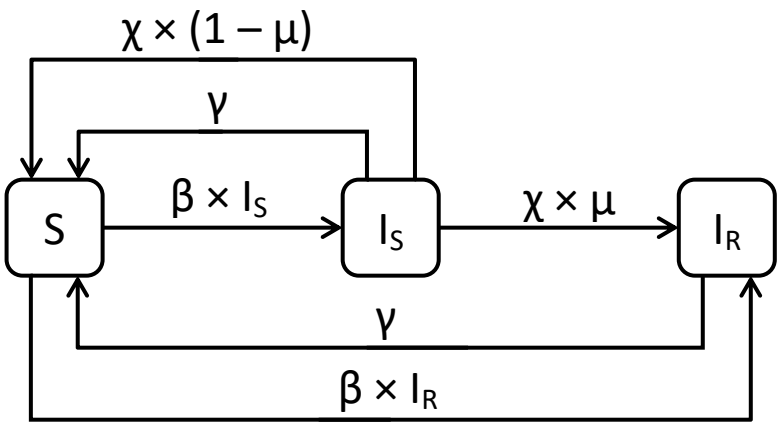

Figure 1. Structure of the epidemiological model for *M. genitalium*.

Assuming a homogenous population without demography, the transmission dynamics can be described by the following ordinary differential equations:

$$\frac{dS}{dt} = -\beta S(I_S + I_R) + \gamma(I_S + I_R) + (1-\mu)\chi I_S \quad (1)$$

$$\frac{dI_S}{dt} = \beta S I_S - (\gamma + \chi) I_S \quad (2)$$

$$\frac{dI_R}{dt} = \beta S I_R - \gamma I_R + \chi \mu I_S \quad (3)$$

101 where β is the transmission rate, which is assumed to be independent of the type of
102 *M. genitalium* strain. Both types of infections can clear naturally at a rate γ. Patients
103 receive treatment at rate χ. The treatment rate is defined as all occasions of
104 treatment with a single 1g dose of azithromycin in a person infected with *M.*
105 *genitalium*, either with or without symptoms. μ denotes the probability of de novo
106 resistance emergence during treatment. The de novo emergence of resistance also
107 implies that the treatment failed. We used the point estimate of the probability of
108 de novo resistance emergence from a meta-analysis, described below. For simplicity,
109 we assumed that resistant infections clear naturally, with no second-line treatment.

110 The rate at which the drug-resistant strain replaces the drug-susceptible in a
111 population can be expressed by the difference in the net growth rates ($\Delta\varphi$) between
112 the two strains [27, 28]:

$$\Delta\varphi = \varphi_R - \varphi_S \quad (4)$$

$$\Delta\varphi = \left(\beta S - \gamma + \frac{\chi\mu I_S}{I_R}\right) - (\beta S - \gamma - \chi) \quad (5)$$

$$\Delta\varphi = \chi\left(1 + \frac{\mu I_S}{I_R}\right) \quad (6)$$

113 **Model parameters**

114 We set the natural clearance rate (γ) of *M. genitalium* to 0.8 y^{-1} [19], and the
115 infection rate ,β, to 0.816 $person^{-1}\ y^{-1}$. These values result in an equilibrium
116 prevalence of *M. genitalium* infections of about 2% in the absence of treatment,
117 which is consistent with estimates of the prevalence of *M. genitalium* in sexually
118 active adults in high-income countries [20]. The values for the natural clearance rate
119 and the prevalence of infection do not govern the relative growth rate of the drug-

120 resistant proportion (Equation 6), so they do not influence the relative prevalence of
121 resistant infections or estimates of the treatment rate. We did not find any
122 published evidence of the effect of macrolide resistance on the fitness of *M.*
123 *genitalium* strains, so we assumed that any fitness reduction is negligible and that
124 resistant and wild-type strains have the same infectivity.

125 The probability of emergence of de novo resistance during treatment, μ, was derived
126 from a meta-analysis of estimates from published studies (supplementary table 1).
127 Our search identified one study [15] published since the search limit of a previous
128 meta-analysis [21]. All included studies investigated patients with *M. genitalium* who
129 received a single 1g dose of azithromycin and who had both pre- and post-treatment
130 specimens tested for macrolide resistance mutations. From each study we extracted
131 the total number of patients with a wild-type pretreatment sample and the number
132 with post-treatment resistance. In contrast to Horner et al. [21], we excluded three
133 patients from one study [13] because we could not confirm the inclusion criteria. We
134 applied the Freeman-Tukey double arcsine transformation to the calculated
135 proportions [22,23] and used a random effects model to estimate the average
136 proportion (with 95% confidence intervals, CI) of patients with initially macrolide
137 susceptible *M. genitalium* who had macrolide resistance mutations detected after
138 treatment (*metaprop* function from the *R* package *meta 4.9*). We estimated that de
139 novo resistance develops in 12% (95% CI 8–17%, I^2 34%) of *M. genitalium* infections
140 treated with 1g azithromycin.

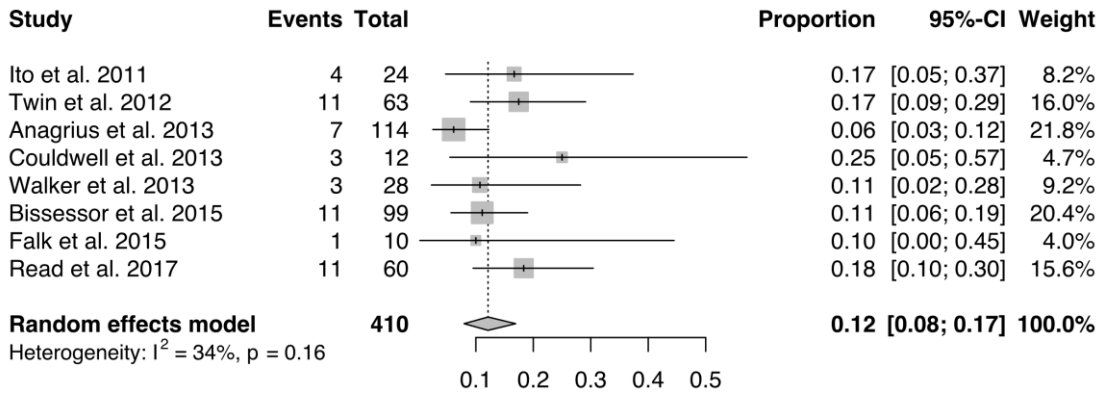

Figure 2. Probability of de novo emergence of azithromycin resistance in *M. genitalium*, estimated by random effects meta-analysis of treatment studies reporting pre-treatment susceptibility to azithromycin [10,11,13–15,21]**.**

Table 1. Model parameters

Parameter	Description	Value	Source
β	Transmission rate	0.816 person^{-1} y^{-1}	See text
γ	Natural clearance rate	0.8 y^{-1}	[19]
χ	Treatment rate of infecteds	Estimated	
μ	Probability of de novo resistance during treatment	12% (95% CI: 8 – 17%)	Meta-analysis of [10–15,21], see Figure 2

Model fitting and simulations

We fitted the transmission model to country-specific resistance data to obtain maximum likelihood estimates of the treatment rate of infected people χ and the time point T for the introduction of azithromycin. Given a model-predicted proportion of resistant strains $p_i = \frac{I_R(i)}{I_S(i)+I_S(i)}$ in year i, the log-likelihood to find k_i resistant samples in N_i tested individuals is:

$$L(\chi, T) = \sum \left(\log \binom{N_i}{k_i} + k_i \log p_i + (N_i - k_i) \log(1 - p_i) \right). \quad (7)$$

Simulations start at time *T* with 98% uninfected people, 2% people with drug susceptible infections and no people with initial drug-resistant infections. We used log-transformed parameters for the estimation and stipulated that the upper limit of *T* could not be beyond the time point where resistance was first observed. We derived simulation-based 95% confidence intervals for the model curve from 10,000 bootstrap samples from the multivariate normal distribution of the two parameters. We used the *ode* function from the *R* package *deSolve 1.20* to solve the ordinary differential equations, and the *mle2* function from the *R* package *bbmle 1.0.19* using the *Nelder-Mead* method for log-likelihood optimization.

To investigate the influence of the level of de novo resistance emergence on the rise in the proportion of resistant infections, we simulated two alternative scenarios. In these scenarios, we kept the model-derived maximum likelihood estimates of χ and *T* but set the probability of de novo resistance emergence to lower values (μ = 1% and μ = 0.1%). As a sensitivity analysis we fitted the model to the country-specific data while assuming lower de novo resistance emergence probabilities of μ = 1% and μ = 0.1% and estimated both the resulting alternative χ and *T* values and the goodness of fit. The goodness of fit was measured with the aggregated negative log-likelihoods of the model fits relative to the country-specific data and the Akaike information criterion (AIC) [24].

Results

Data

173 We included five studies that provided data about the proportion of azithromycin-
174 resistant *M. genitalium* infections over time and the management of *M. genitalium*
175 infection in France [25–27], Denmark [1] and Sweden [11] (supplementary table 2).
176 Study authors provided additional information from Denmark (data disaggregated by
177 year) and Sweden (numbers of patients per year and unpublished data for 2012 and
178 2013) [1,11].

179 In France, we included three studies with data from 314 patients (310 from
180 Bordeaux) from 2003 to 2012 [25–27]. None of 17 *M. genitalium* positive specimens
181 from 2003 to 2005 contained macrolide resistance mutations. From 2006 onwards,
182 mutations were detected in 10% to 17% of specimens tested in each year. In France,
183 azithromycin was introduced for first line treatment of NGU in the 1990s [28]. For
184 Denmark, one study reported nationwide data from 1,008 patients with *M.*
185 *genitalium* detected from 2006 to 2010, with 27% to 42% of specimens containing
186 macrolide resistance mutations [1]. In Denmark, 1g single dose azithromycin is
187 routinely prescribed for treatment of NGU; erythromycin was the first-line treatment
188 before azithromycin became available. An extended azithromycin regimen is
189 prescribed if a *M. genitalium* infection was diagnosed and NAAT for detection of *M.*
190 *genitalium* infections have been available since 2003 [1]. In Sweden, we analyzed
191 one study with data about macrolide resistance mutations from 408 samples
192 obtained from 2006 to 2013 from patients at a single clinic in Falun [11]. Macrolide
193 resistance mutations were first detected in a single specimen in 2008 and increased
194 to 16% of 95 specimens in 2011. In Sweden, doxycycline is used as first line
195 treatment for NGU [29]. Azithromycin is used only when *M. genitalium* is identified

196 as the cause, with testing introduced in the 2000s [11].

197 **Mathematical model**

198 The transmission model fitted the increase in *M. genitalium* resistance in France,
199 Denmark and Sweden well (Figure 3). The rise in the proportion of azithromycin
200 resistant *M. genitalium* infections in all three countries was consistent with de novo
201 emergence of macrolide resistance mutations in 12% of initially wild-type infections.
202 The alternative scenarios show that lower probabilities of de novo resistance, but
203 the same estimated treatment rates and time points for the introduction of
204 azithromycin, would result in considerably lower proportions of resistant *M.*
205 *genitalium* infections (Figure 3).

206 The model estimated treatment rate of infected people and date of introduction of
207 azithromycin were: France, treatment rate 0.07 y^{-1} (95% CI 0.02 – 0.18 y^{-1}),
208 introduction of azithromycin in May 2000 (95% CI October 1986 – June 2005);
209 Denmark, treatment rate of 0.13 y^{-1} (95% CI 0.05 – 0.34 y^{-1}), introduction of
210 azithromycin in August 1996 (95% CI November 1976 – January 2004); Sweden,
211 treatment rate 0.14 y^{-1} (95% CI 0.11 – 0.17 y^{-1}), introduction of azithromycin July
212 2006 (95% CI January 2006 – November 2006). A treatment rate of 0.14 y^{-1}, such as
213 in Sweden, corresponds to a proportion of $1 - e^{-0.14} \sim 13\%$ of infected individuals
214 that will have received treatment after one year.

215 In the sensitivity analysis, assuming de novo resistance emergence probabilities of
216 1% or 0.1%, the model estimated higher treatment rates of infected individuals,
217 implausibly early time points of azithromycin introduction and worse goodness of fit

218 (supplementary table 3).

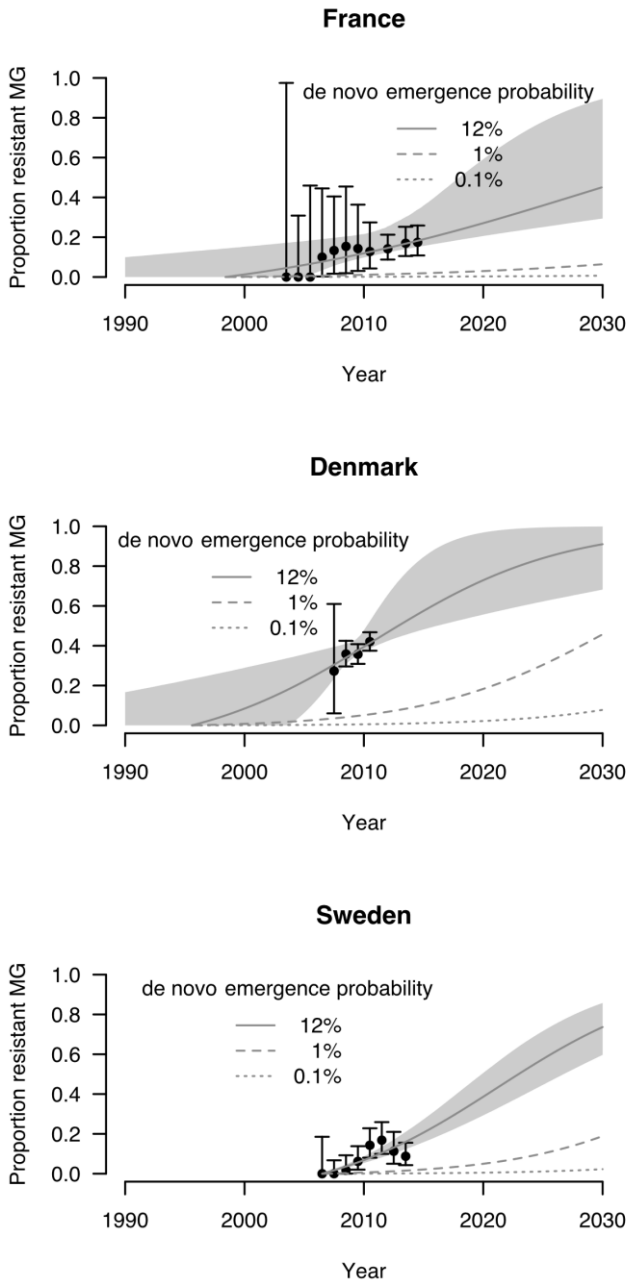

219

220 **Figure 3. Maximum likelihood fits (solid grey lines) of the transmission model to**

221 **the data of the relative prevalence of azithromycin-resistant *M. genitalium***

222 **infections in France, Denmark and Sweden over time. The black data points**

223 **correspond to reported proportions of resistant infections** [1,11,25–27] **(including**

224 **unpublished data from Denmark and Sweden). The error bars indicate the 95%**

confidence intervals. The light grey area is the 95% confidence interval of the model predictions. The dashed and dotted lines depict alternative scenarios with lower probabilities of de novo emergence of resistance but with the treatment rate and time point of azithromycin introduction obtained from the maximum likelihood fit.

The probability of de novo resistance emergence increases the growth rate of resistant infections across different initial values for the proportion of resistant infections (Figure 4). The relationship between the proportion of drug-resistant *M. genitalium* infections ($\Delta\varphi$) and the proportion of resistant infections explains some of the dynamics of resistance spread. The growth advantage conferred by de novo emergence of resistant strains is always greatest at the time of introduction of antibiotic treatment, when the proportion of resistant strains is the lowest. As the resistant strain spreads, the growth advantage diminishes, slowly approaching $\Delta\varphi = \chi$ according to Equation 6. Thus, the growth acceleration of resistant strains provided by de novo resistance reduces as the resistant strain spreads through the pathogen population. The curves for which we assumed a lower de novo resistance emergence probability are substantially flatter than the curve that results from the probability of de novo resistance estimated from the data.

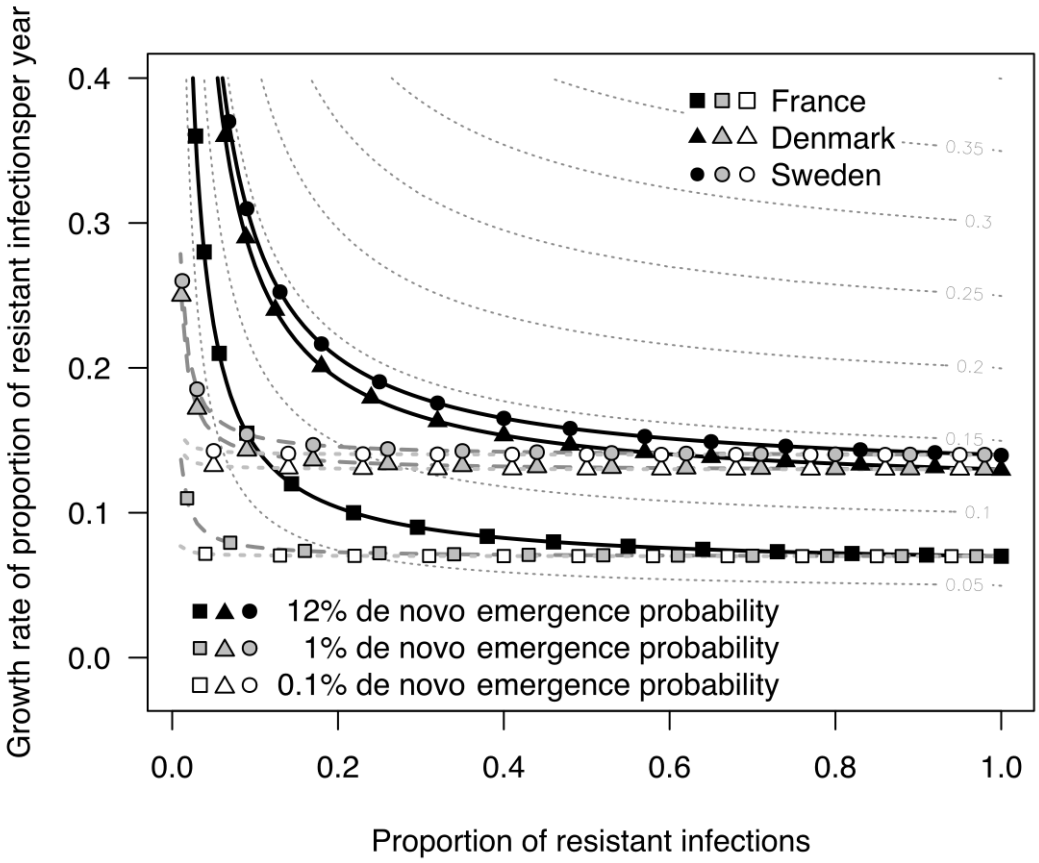

Figure 4. Relationship between the growth rate of the drug-resistant proportion of *M. genitalium* infections and the proportion of resistant infections for different treatment rates. The colored solid lines show the growth rate for France (squares), Denmark (triangles), and Sweden (circles) in a model that includes the established 12% probability for de novo emergence of drug resistance (black symbols). The grey and white symbols are the growth rates in a model that uses the same treatment rate but reduced probabilities for de novo emergence of resistance.

Discussion

In this study, we fitted a compartmental model to time trend data about the proportions of azithromycin-resistant *M. genitalium* infections in France, Denmark

254 and Sweden and estimated the treatment rates and the time point of introduction of
255 azithromycin in those countries. Alternative scenarios with the same model would
256 result in considerably slower rise of *M. genitalium* resistance.

257 This study strongly suggests that, rather than resulting in 'occasional treatment
258 failure' as originally believed [9], the development of de novo resistant mutations in
259 about one in eight *M. genitalium* infections [21] is the main driver of azithromycin
260 resistance. The data from France and Sweden [11,25–27], where no macrolide
261 resistant mutations were detected initially, show a substantial proportion of
262 diagnosed *M. genitalium* infections with azithromycin resistance after just a few
263 years of azithromycin use. Our model shows that a high de novo resistance
264 acquisition rate contributes considerably to the spread of resistance, particularly
265 during the early stages. The effect then decreases as the proportion of resistant
266 infections increases. This pattern contrasts with alternative scenarios in which
267 resistance emerges with a lower probability. Then, the effect on the growth rate
268 would be substantially smaller and the growth dynamics of the drug resistant
269 proportion are much closer to a logistic growth model. Assuming the same
270 treatment rate of infected individuals and time point of introduction of
271 azithromycin, this growth dynamic would require much more time to reach the
272 levels of resistance that we observed. Our model-predicted estimates of the
273 introduction of azithromycin for the treatment of NGU were consistent with
274 published data describing its use in France [28] and Denmark in the 1990s, but later
275 introduction in Sweden [11]. Our estimated treatment rate of infected individuals for
276 France was lower than those for Denmark and Sweden but the 95% confidence

277 intervals of all three estimates overlap. The estimated rates in Sweden and Denmark
278 are very close to those estimated in another epidemiological model of *M. genitalium*
279 infections in the United Kingdom [30].

280 The high probability of de novo emergence of macrolide resistance mutations during
281 treatment of *M. genitalium* infections appears to differ from experiences with some
282 other sexually transmitted bacterial infections. A 1g dose of azithromycin might
283 often be insufficient to eradicate a *M. genitalium* infection in concert with host
284 immune responses, allowing for either a resistance mutation to occur in the single
285 23S rRNA operon during treatment or the survival of a few pre-existing drug-
286 resistant bacteria and the subsequent selection of the mutants. The latter
287 explanation is favored by the strong association with de novo resistance and high
288 organism load [10,15], but both mechanisms may play a role. In the absence of any
289 observable fitness cost, or of routine tests to detect macrolide resistance mutations,
290 *M. genitalium* resistance has emerged and spread rapidly. In contrast, selection
291 pressure exerted by treatment and clonal spread are the major drivers of the spread
292 of macrolide-resistant *Neisseria gonorrhoeae,* with de novo resistance considered to
293 be negligible [18]. *N. gonorrhoeae* has four copies of the 23S rRNA gene and
294 resistance increases with the number of mutated copies [31]. In addition, active
295 measures are used to limit the potential for the emergence of de novo macrolide
296 resistance in *N. gonorrhoeae*, including dual therapy, in which azithromycin is a
297 second drug in combination with ceftriaxone. Transmitted resistance is assumed to
298 be responsible for most antimicrobial resistance, but a high rate of de novo
299 resistance emergence has been observed during treatment with various antibiotics

300 of infections such as *Pseudomonas aeruginosa* and *Enterobacteriaceae* [32,33]. In
301 general, de novo selection of drug-resistant mutants within a single patient occurs
302 more often if the resistance is mediated by single-base mutations than if acquisition
303 of efflux pumps or other complex mechanism are needed [34]. Thus, it is distinct
304 from the selection of drug resistance as a result of treatment at the population level
305 which is more often transmitted; a situation which is seen with most other bacterial
306 and parasitic sexually transmitted infections.

307 A strength of this study is the use of empirical data sources and mathematical
308 modelling. Parameters that were not available in the literature were estimated by
309 fitting the model to observational data. Despite its simplicity, the model assumptions
310 provide a coherent qualitative explanation for the clinically observed rapid rise of
311 macrolide resistant *M. genitalium* infections.

312 There are some caveats to both the observational data sources and the model. First,
313 owing to the small number of samples for each data point, particularly for early
314 years, confidence intervals for those estimates of the proportion of resistant
315 infections are wide. In Denmark, azithromycin has been used for a long time but data
316 about the prevalence of drug resistant infections were only available since 2006,
317 which introduces more uncertainty in the estimated point at which resistance
318 emerged. Second, the characteristics of people tested for *M. genitalium* in the three
319 countries are not well described and differences in testing practices between
320 countries might account for some of the variation in the proportions with macrolide
321 resistance. An increase over time in the proportion of resistant infections was,
322 however, observed in all three countries. We used a relatively simple transmission

323 model, so we made several simplifying assumptions. First, we assumed that
324 treatment rates of infected individuals in each country were constant over time and
325 did not account for the possibility that azithromycin use might have changed over
326 time. Second, we assumed that no second line treatments were used for resistant *M.*
327 *genitalium* infections. In practice, since most *M. genitalium* infections are
328 asymptomatic and diagnostic testing is still uncommon, we do not think that this
329 simplification affected our results. Third, our model does not include detailed
330 population structure because the rate at which the relative proportion of resistant
331 bacterial strains spread in a population can often be explained by the treatment
332 rate, rather than the sexual network structure [18]. More complex models with
333 different sexes, partner change rates and age structure, would be necessary to
334 obtain a better description of the absolute prevalence of infections and resistance,
335 but this was not the objective of this study.

336 The high level of azithromycin resistance in *M. genitalium*, driven by de novo
337 resistance, poses problems for clinical management and population level control
338 strategies [35]. Screening and treatment of asymptomatic *M. genitalium* would
339 simply result in the spread of more strains with de novo mutations, with absent
340 evidence of a reduction in clinical morbidity [35]. Treatment strategies to maintain
341 the use of existing antimicrobials are also being evaluated since resistance to second
342 line treatment with moxifloxacin is already increasing [3]. In an observational study,
343 resistance-guided therapy for symptomatic *M. genitalium*, with initial treatment
344 with doxycycline followed by 2.5g azithromycin over three days for macrolide
345 susceptible infections and sitafloxacin for resistant infections resulted in an
346 incidence of de novo macrolide resistance of 2.6% (95% CI 0.3–9.2%) [36].

347 Randomized controlled trials are now needed to evaluate different treatment
348 algorithms and new antimicrobials or combination therapy that might have a lower
349 propensity for the emergence of de novo resistance [8]. Since de novo resistance is
350 the main driver of azithromycin resistance in *M. genitalium*, blind treatment of
351 urethritis with single dose azithromycin is not recommended. Clinical management
352 strategies for *M. genitalium* and other STIs should seek to limit the unnecessary use
353 of macrolides.

354 **Conflict of interest statement**

355 All authors: No reported conflicts. All authors have submitted the ICMJE Form of
356 Disclosure of Potential Conflicts of Interest.

357 **Funding**

358 This work was supported by the Swiss National Science Foundation, Epidemiology
359 and Mathematical Modelling in Infectious Diseases Control (EpideMMIC) project,
360 project grant number 32003B_160320.

361 **Acknowledgement**

362 We would like to thank Carin Anagrius from the Falu lasarett in Falun, Sweden and
363 Kirsten Salado-Rasmussen from the Bispebjerg Hospital in Copenhagen, Denmark for
364 providing us with additional unpublished data.

365 **Previous presentation**

366 An earlier version of this work was presented as a poster at EPIDEMICS 6: 6th
367 International Conference on Infectious Disease Dynamics. Sitges, Spain, November
368 29 to December 1 2017. Cadosch D, Garcia V, Althaus CL, Low N. Inadequate
369 treatment accelerates the spread of macrolide resistance in Mycoplasma genitalium

370 # References

371 [1] Salado-Rasmussen K, Jensen JS. Mycoplasma genitalium Testing Pattern and
372 Macrolide Resistance: A Danish Nationwide Retrospective Survey. Clin Infect
373 Dis **2014**; 59:24–30.

374 [2] Pond MJ, Nori A V, Witney AA, Lopeman RC, Butcher PD, Sadiq ST. High
375 prevalence of antibiotic-resistant mycoplasma genitalium in nongonococcal
376 urethritis: The need for routine testing and the inadequacy of current
377 treatment options. Clin Infect Dis **2014**; 58:631–7.

378 [3] Murray GL, Bradshaw CS, Bissessor M, Danielewski J, Garland SM, Jensen JS,
379 et al. Increasing Macrolide and Fluoroquinolone Resistance in Mycoplasma
380 genitalium. Emerg Infect Dis **2017**; 23:809–12.

381 [4] Gesink DC, Mulvad G, Montgomery-Andersen R, Poppel U, Montgomery-
382 Andersen S, Binzer A, et al. Mycoplasma genitalium presence, resistance and
383 epidemiology in Greenland. Int J Circumpolar Health **2012**; 71:1–8.

384 [5] Taylor-Robinson D, Jensen JS. Mycoplasma genitalium: from Chrysalis to
385 Multicolored Butterfly. Clin Microbiol Rev **2011**; 24:498–514.

386 [6] Wiesenfeld HC, Manhart LE. Mycoplasma genitalium in Women: Current
387 Knowledge and Research Priorities for This Recently Emerged Pathogen. J
388 Infect Dis **2017**; 216:S389–95.

389 [7] Gaydos CA. Mycoplasma genitalium: Accurate Diagnosis Is Necessary for
390 Adequate Treatment. J Infect Dis **2017**; 216:S406–11.

391 [8] Bradshaw CS, Jensen JS, Waites KB. New Horizons in Mycoplasma genitalium
392 Treatment. J Infect Dis **2017**; 216:S412–9.

393 [9] Jensen JS, Bradshaw CS, Tabrizi SN, Fairley CK, Hamasuna R. Azithromycin
394 Treatment Failure in Mycoplasma genitalium–Positive Patients with
395 Nongonococcal Urethritis Is Associated with Induced Macrolide Resistance.
396 Clin Infect Dis **2008**; 47:1546–53.
397 [10] Bissessor M, Tabrizi SN, Twin J, Abdo H, Fairley CK, Chen MY, et al. Macrolide
398 Resistance and Azithromycin Failure in a Mycoplasma genitalium-Infected
399 Cohort and Response of Azithromycin Failures to Alternative Antibiotic
400 Regimens. Clin Infect Dis **2015**; 60:1228–36.
401 [11] Anagrius C, Loré B, Jensen JS. Treatment of Mycoplasma genitalium.
402 Observations from a Swedish STD Clinic. PLoS One **2013**; 8:e61481.
403 [12] Ito S, Shimada Y, Yamaguchi Y, Yasuda M, Yokoi S, Ito SI, et al. Selection of
404 Mycoplasma genitalium strains harbouring macrolide resistance-associated
405 23S rRNA mutations by treatment with a single 1 g dose of azithromycin. Sex
406 Transm Infect **2011**; 87:412–4.
407 [13] Twin J, Jensen JS, Bradshaw CS, Garland SM, Fairley CK, Min LY, et al.
408 Transmission and Selection of Macrolide Resistant Mycoplasma genitalium
409 Infections Detected by Rapid High Resolution Melt Analysis. PLoS One **2012**;
410 7:e35593.
411 [14] Falk L, Enger M, Jensen JS. Time to eradication of Mycoplasma genitalium
412 after antibiotic treatment in men and women. J Antimicrob Chemother **2015**;
413 70:3134–40.
414 [15] Read TRH, Fairley CK, Tabrizi SN, Bissessor M, Vodstrcil L, Chow EPF, et al.
415 Azithromycin 1.5g Over 5 Days Compared to 1g Single Dose in Urethral
416 Mycoplasma genitalium: Impact on Treatment Outcome and Resistance. Clin

417 Infect Dis **2017**; 64:250–6.

418 [16] Martin DH, Manhart LE, Workowski KA. Mycoplasma genitalium From Basic
419 Science to Public Health: Summary of the Results From a National Institute of
420 Allergy and Infectious Disesases Technical Consultation and Consensus
421 Recommendations for Future Research Priorities. J Infect Dis **2017**; 216:S427–
422 30.

423 [17] Bonhoeffer S, Lipsitch M, Levin BR. Evaluating treatment protocols to prevent
424 antibiotic resistance. PNAS Proc Natl Acad Sci United States Am **1997**;
425 94:12106–11.

426 [18] Fingerhuth SM, Bonhoeffer S, Low N, Althaus CL. Antibiotic-Resistant Neisseria
427 gonorrhoeae Spread Faster with More Treatment, Not More Sexual Partners.
428 PLoS Pathog **2016**; 12:1–15.

429 [19] Smieszek T, White PJ. Apparently-Different Clearance Rates from Cohort
430 Studies of Mycoplasma genitalium Are Consistent after Accounting for
431 Incidence of Infection, Recurrent Infection, and Study Design. PLoS One **2016**;
432 11:1–18.

433 [20] Baumann L, Cina M, Egli-Gany D, Goutaki M, Halbeisen FS, Lohrer G-R, et al.
434 Prevalence of Mycoplasma genitalium in different population groups:
435 systematic review and meta-analysis. Sex Transm Infect **2018**; 94:255-62.

436 [21] Horner P, Ingle SM, Garrett F, Blee K, Kong F, Muir P, et al. Which
437 azithromycin regimen should be used for treating *Mycoplasma genitalium* ? A
438 meta-analysis. Sex Transm Infect **2018**; 94:14–20.

439 [22] Miller JJ. The Inverse of the Freeman-Tukey Double Arcsine Transformation.
440 Am Stat **1978**; 32:138.

441 [23] Barendregt JJ, Doi SA, Lee YY, Norman RE, Vos T. Meta-analysis of prevalence.
442 J Epidemiol Community Health **2013**; 67:974–8.
443 [24] Akaike H. A New Look at the Statistical Model Identification. IEEE Trans
444 Automat Contr **1974**; 19:716–23.
445 [25] Chrisment D, Charron A, Cazanave C, Pereyre S, Bébéar C. Detection of
446 macrolide resistance in Mycoplasma genitalium in France. J Antimicrob
447 Chemother **2012**; 67:2598–601.
448 [26] Touati A, Peuchant O, Jensen JS, Bébéar C, Pereyrea S. Direct Detection of
449 Macrolide Resistance in Mycoplasma genitalium Isolates from Clinical
450 Specimens from France by Use of Real-Time PCR and Melting Curve Analysis. J
451 Clin Microbiol **2014**; 52:1549–55.
452 [27] Le Roy C, Hénin N, Pereyre S, Bébéar C. Fluoroquinolone-Resistant
453 Mycoplasma genitalium, Southwestern France. Emerg Infect Dis **2016**;
454 22:1677–9.
455 [28] Joly-Guillou M-L, Lasry S. Practical Recommendations for the Drug Treatment
456 of Bacterial Infections of the Male Genital Tract Including Urethritis,
457 Epididymitis and Prostatitis. Drugs **1999**; 57:743–50.
458 [29] Björnelius E, Magnusson C, Jensen JS. Mycoplasma genitalium macrolide
459 resistance in Stockholm, Sweden. Sex Transm Infect **2016**; 93:167–8.
460 [30] Birger R, Saunders J, Estcourt C, Sutton AJ, Mercer CH, Roberts T, et al. Should
461 we screen for the sexually-transmitted infection Mycoplasma genitalium?
462 Evidence synthesis using a transmission-dynamic model. Sci Rep **2017**;
463 7:16162.
464 [31] Unemo M, Shafer WM. Antimicrobial resistance in Neisseria gonorrhoeae in

465 the 21st Century: Past, evolution, and future. Clin Microbiol Rev **2014**;
466 27:587–613.
467 [32] Chow JW, Fine MJ, Shlaes DM, Quinn JP, Hooper DC, Johnson MP, et al.
468 Enterobacter Bacteremia: Clinical Features and Emergence of Antibiotic
469 Resistance during Therapy. Ann Intern Med **1991**; 115:585–90.
470 [33] Carmeli Y, Troillet N, Eliopoulos GM, Samore MH. Emergence of Antibiotic-
471 Resistant Pseudomonas aeruginosa : Comparison of Risks Associated with
472 Different Antipseudomonal Agents. Antimicrob Agents Chemother **1999**;
473 43:1379–82.
474 [34] Unemo M, Jensen JS. Antimicrobial-resistant sexually transmitted infections:
475 gonorrhoea and Mycoplasma genitalium. Nat Rev Urol **2017**; 14:139–52.
476 [35] Golden MR, Workowski KA, Bolan G. Developing a Public Health Response to
477 Mycoplasma genitalium. J Infect Dis **2017**; 216:S420–6.
478 [36] Read TRH, Fairley CK, Murray GL, Jensen JS, Danielewski J, Worthington K, et
479 al. Outcomes of Resistance-guided Sequential Treatment of Mycoplasma
480 genitalium Infections: A Prospective Evaluation. Clin Infect Dis **2018**;
481 doi:10.1093/cid/ciy477.
482

Supplementary material

De novo mutations drive the spread of macrolide-resistant *Mycoplasma genitalium*: a mathematical modelling study

Dominique Cadosch[1], Victor Garcia[1 2], Christian L. Althaus[1], Jørgen Skov Jensen[3], Nicola Low[1]

[1] Institute of Social and Preventive Medicine, University of Bern, Switzerland

[2] School of Life Sciences and Facility Management, Zurich University of Applied Sciences, Switzerland

[3] Research Unit for Reproductive Tract Microbiology, Statens Serum Institut, Copenhagen, Denmark

Contents

Supplementary table 1. Characteristics of studies included in meta-analysis, by year of publication 27

Supplementary table 2. Characteristics of studies with time trend data about azithromycin resistant infections 29

Supplementary table 3. Log-likelihoods of model fits, estimated treatment rates and estimated time points of azithromycin introduction with different probabilities of emergence of *de novo* azithromycin resistance 31

Supplementary material

Supplementary table 1. Characteristics of studies included in meta-analysis, by year of publication

First author, year [ref]	Study period	Setting	Study population with MG, treated with 1g azithromycin	Method of detection	Number with pre- and post-treatment results	Number wild-type pre-treatment	Number with mutations in 23S rRNA gene	Comment
Ito S, 2011 [13]	2006-2008	Urology clinic, Sendai, Japan	Men with NGU, N=58	rt-PCR and sequencing	25	24	4	Stored samples; 25 samples selected at random for resistance testing
Twin J, 2012 [14]	2007-2009	Melbourne Sexual Health Centre, Victoria, Australia	Women and men with MG, N=111	rt-PCR and high resolution melt analysis	82	63	11	Stored samples from an audit of MG clinical management; 3 post-treatment specimens lost and not tested for resistance
Anagrius C, 2013 [3]	2006-2011	Department of Venereology, Falun, Sweden	Patients with symptoms of genital tract infection, N=117 (52 women, 65 men)	rt-PCR and sequencing	114	114	7	Stored samples; 10 MG positive after treatment, 3 excluded: 2 pre-treatment specimens missing, 1 insufficient material
Couldwell D, 2013	2008-2011	Western Sydney Sexual Health Centre, Sydney, Australia	Patients with NGU, N=18	rt-PCR and sequencing	18	12	3	Stored residual clinical specimens
Walker J, 2013	2007-2008	Primary health clinics in New South Wales, Victoria, and the Australian Capital Territory, Australia	Women who were recruited for study at clinics, N=32	rt-PCR and high resolution melt analysis	30	28	3	Cohort study assessing incidence of CT and MG; 2 pre-treatment specimens missing; 2 specimens with pre-existing resistance
Bissessor M, 2015 [1]	2012-2013	Melbourne Sexual Health Centre, Melbourne, Australia	Patients with NGU, cervicitis, PID, or contacts, N=160	rt-PCR and high resolution melt analysis	155	99	11	Prospective cohort study assessing clinical management of MG

Supplementary material

Falk L, 2015 [15]	2010-2014	Dermatology and Venereology clinics, Västervik and Norrköping, Sweden	Patients with symptoms or at high risk of MG, N=15 (5 women, 10 men)	rt-PCR and sequencing	12	10	1	Prospective study reporting randomised and non-randomised comparisons of MG treatments
Read T, 2017 [16]	2013-2015	Melbourne Sexual Health Centre, Melbourne, Australia	Men with NGU	rt-PCR and sequencing	107	60	11	Stored samples; historical control group in a comparison of MG treatments

MG, *Mycoplasma genitalium*; rRNA, ribosomal ribonucleic acid; NGU, non-gonococcal urethritis; PID, pelvic inflammatory disease; rt-PCR, real time PCR

Supplementary material

Supplementary table 2. Characteristics of studies with time trend data about azithromycin-resistant infections

First author, year [ref]	Study year or period	Setting	Study population	Method of detection	Number of specimens tested	Number with mutations in 23S rRNA gene	Comment
Chrisment, 2012 [2]	2003	Pellegrin Hospital, Bordeaux, France and Saint-Louis Hospital, Paris, France	Retrospective analysis of MG-positive specimens from sexually transmitted disease clinics and general practice clinics	rt-PCR and sequencing	1	0	Only 4 specimens from the Paris clinic
	2004				10	0	
	2005				6	0	
	2006				10	1	
	2007				15	2	
	2008				13	2	
	2009				21	3	
	2010				39	5	
Touati, 2014 [6]	2011-12	Pellegrin Hospital, Bordeaux, France	Retrospective analysis of MG-positive specimens	rt-PCR and high resolution melt analysis	134	15	
Le Roy, 2016 [26]	2013	Bordeaux University Hospital, Bordeaux, France	Retrospective analysis of MG-positive specimens	rt-PCR and high resolution melt analysis	112	19	
	2014				109	19	
Anagrius, 2013 [3]	2006	Department of Venereology, Central Hospital, Falun, Sweden	Retrospective analysis of MG-positive specimens	rt-PCR and sequencing	18	0	Study authors provided patient numbers for each year and data for 2012 and 2013
	2007				53	0	
	2008				58	1	
	2009				81	5	
	2010				98	14	
	2011				100	21	
	2012				71	8	

	2013				114	10	
Salado-Rasmussen, 2014 [4]	2007	General practitioners, private specialists, and hospitals across Denmark	Retrospective analysis of MG-positive specimens	rt-PCR and rapid pyrosequencing	11	3	Data for individual years were aggregated in the publication. Statens Serum Institut was the only laboratory testing for macrolide resistance during the study period
	2008				226	81	
	2009				378	135	
	2010				454	191	

rRNA, ribosomal ribonucleic acid; MG, *Mycoplasma genitalium*; rt-PCR, real time PCR

Supplementary material

Supplementary table 3. Log-likelihoods of model fits, estimated treatment rates and estimated time points of azithromycin introduction with different probabilities of emergence of *de novo* azithromycin resistance

	Probability of emergence of *de novo* azithromycin resistance		
	12%	**1%**	**0.1%**
France			
Log-likelihood	-14.95	-15.07	-15.09
Treatment rate person^{-1} year^{-1}	0.07 (95% CI 0.02 - 0.18)	0.10 (95% CI 0.03 - 0.30)	0.11 (95% CI 0.01 - 1.37)
Azithromycin introduction	May 2000 (95% CI: Oct 1986 - Jun 2005)	Nov 1985 (95% CI: Oct 1941 - Nov 2000)	Apr 1966 (95% CI Sep 1473 - Mar 2005)
Denmark			
Log-likelihood	-11.21	-11.20	-11.20
Treatment rate person^{-1} year^{-1}	0.13 (95% CI 0.05 - 0.34)	0.15 (95% CI 0.07 - 0.32)	0.16 (95% CI 0.10 - 0.24)
Azithromycin introduction	Aug 1996 (95% CI Nov 1976 - Jan 2004)	Aug 1983 (95% CI Jun 1957 - Jun 1996)	May 1969 (95% CI Nov 1947 - Apr 1983)
Sweden			
Log-likelihood	-19.00	-20.86	-21.07
Treatment rate person^{-1} year^{-1}	0.14 (95% CI 0.11 - 0.17)	0.21 (95% CI 0.11 - 0.40)	0.22 (95% CI 0.11 - 0.43)
Azithromycin introduction	Jul 2006 (95% CI Jan 2006 - Nov 2006)	Aug 1999 (95% CI Aug 1991 - Oct 2003)	Oct 1989 (95% CI Oct 1971 - Dec 1998)
Aggregated log-likelihood	-45.16	-47.13	-47.36
Aggregated AIC	94.32	98.26	98.72

AIC, Akaike information criterion; CI, confidence interval