Efficient single-copy HDR by 5' modified long dsDNA donors

Jose Arturo Gutierrez-Triana[1,2,3], Tinatini Tavhelidse[1,2], Thomas Thumberger[1,2], Isabelle Thomas[2], Beate Wittbrodt[2], Tanja Kellner[2], Kerim Anlas[2], Erika Tsingos[2] and Joachim Wittbrodt[2]*

[1]These authors contributed equally to this work.

[2]Centre for Organismal Studies (COS), Heidelberg University, Im Neuenheimer Feld 230, D-69120 Heidelberg, Germany.

[3]Current address: Escuela de Microbiología, Facultad de Salud, Universidad Industrial de Santader, Cra. 32 #29-31, Bucaramanga, Santander, Colombia.

*Corresponding author:

Joachim Wittbrodt

jochen.wittbrodt@cos.uni-heidelberg.de

Developmental Biology and Physiology

Centre for Organismal Studies (COS), Heidelberg University

Im Neuenheimer Feld 230, D-69120 Heidelberg, Germany

Phone +49 (6221) 54-6499

Fax +49 (6221) 54-5639

ABSTRACT

CRISPR/Cas9 efficiently induces targeted mutations via non-homologous-end-joining but for genome editing, precise, homology-directed repair (HDR) of endogenous DNA stretches is a prerequisite. To favor HDR, many approaches interfere with the repair machinery or manipulate Cas9 itself. Using Medaka we show that the modification of 5' ends of long dsDNA donors strongly enhances HDR, favors efficient single-copy integration by retaining a monomeric donor conformation thus facilitating successful gene replacement or tagging.

33 **Main**

34 The implementation of the bacterial CRISPR/Cas9 system in eukaryotes has triggered
35 a quantum leap in targeted genome editing in literally any organism with a
36 sequenced genome or targeting region (Cong et al., 2013; Jinek et al., 2012; Mali et
37 al., 2013). Site-specific double-strand breaks (DSBs) are catalyzed by the Cas9
38 enzyme guided by a single RNA with a short complementary region to the target site.
39 In response, the endogenous non-homologous end joining (NHEJ) DNA repair
40 machinery seals the DSB. Since perfect repair will restore the CRISPR/Cas9 target site,
41 mutations introduced by imprecise NHEJ are selected for.
42 To acquire precise genome editing the initial DSB should be fixed via the homology-
43 directed repair (HDR) mechanism which is preferentially active during the late S/G2
44 phase of the cell cycle (Hustedt and Durocher, 2017). Donor DNA templates with
45 flanking regions homologous to the target locus are used to introduce specific
46 mutations or particular DNA sequences. Injected (linear) dsDNA rapidly multimerizes
47 (Winkler et al., 1991), which likely also happens in CRISPR/Cas9 based approaches.
48 Additionally, the high activity of NHEJ re-ligating CRISPR/Cas9 mediated DSBs can
49 multimerize injected (linear) dsDNA donor templates. This poses a problem since
50 consequently, the precise HDR-mediated recombination of single-copy donor
51 templates is rather rare.
52 Several strategies have been followed to avoid NHEJ and/or favor HDR. NHEJ was
53 interfered with by pharmacological inhibition of DNA ligase IV (Maruyama et al.,
54 2015). Conversely, HDR was meant to be favored by fusing the HDR-mediating yeast
55 protein Rad52 to Cas9 (Wang et al., 2017). Similarly, removal of Cas9 in the G1/S
56 phase (Gutschner et al., 2016) by linking it to the N-terminal region of the DNA

57 replication inhibitor Geminin, should restrict the introduction of double-strand cuts
58 to the G2 phase, when HDR is most prominently occurring (Hustedt and Durocher,
59 2017). Those approaches improved HDR-mediated integration of the homology
60 flanks, while they did not tackle reported integration of multimers (Auer et al., 2014)
61 arising after injection of dsDNA templates such as plasmids or PCR products (Winkler
62 et al., 1991).
63 To enhance HDR without interfering with the endogenous DNA repair machinery we
64 aimed at establishing DNA donor templates that escape multimerization or NHEJ
65 events. We thus blocked both 5´ends of PCR amplified long dsDNA donor cassettes
66 using "bulky" moieties like Biotin, Amino-dT (A-dT) and carbon spacers (e. g. Spacer
67 C3, SpC3). This should shield the DNA donor from multimerization and integration
68 via NHEJ, thus favoring precise and efficient single-copy integration via HDR (Fig. 1a).
69 We first addressed the impact of the donor 5' modification on the formation of
70 multimers *in vivo*. We injected modified and unmodified dsDNA donors into one cell
71 stage medaka (*Oryzias latipes*) embryos and analyzed the conformational state of
72 the injected material during zygotic development. dsDNA donors were generated by
73 PCR employing 5' modified and non-modified primers respectively, and by
74 additionally providing traces of DIG-dUTP for labeling of the resulting PCR product.
75 The conformation of the injected dsDNA donors was assayed in the extracted total
76 DNA after 2, 4 and 6 hours post-injection, respectively. The DNA was size
77 fractionated by gel electrophoresis and donor DNA conformation was detected after
78 blotting the DNA to a nylon membrane by anti-DIG antibodies (Fig. 1b). In
79 unmodified DIG-labelled control donors, we uncovered multimerization already at
80 2h post-injection as evident by a ladder of labeled donor DNA representing different

81 copy number multimers (Fig. 1b). In contrast, Biotin and SpC3 modification of DIG-
82 labelled donors prevented multimerization within six hours post-injection (Fig. 1b).
83 dsDNA donors established by A-dT modified primes, however, multimerized and
84 produced similar results as unmodified DIG-labelled dsDNA donors (Fig. 1b). Our
85 results reveal that Biotin and SpC3 5' modifications efficiently prevent donor
86 multimerization *in vivo*. While strongly blocking multimerization, the 5' modification
87 of dsDNA did not apparently enhance the stability of the resulting dsDNA (compare
88 modified and unmodified donors over time, Fig. 1b).
89 To test whether 5' modification not only reduces the degree of multimerization but
90 also impacts on single-copy HDR-mediated integration of long dsDNA donors, we
91 designed *gfp* containing donor cassettes for an immediate visual readout. We
92 generated *gfp* in-frame fusion donors for four different genes: the retinal homeobox
93 transcription factors *rx2* and *rx1* (Reinhardt et al., 2015), the non-muscle cytoskeletal
94 *beta-actin* (*actb*) (Stemmer et al., 2015) and the *DNA methyltransferase 1* (*dnmt1*).
95 Donor cassettes contained the respective 5' homology flank (HF) (462bp for *rx2*,
96 430bp for *rx1,* 429bp for *actb*, 402bp for *dnmt1*), followed by the in-frame *gfp*
97 coding sequence, a flexible linker in case of *rx2, rx1* and *dnmt1*, and the
98 corresponding 3' HF (414bp for *rx2*, 508bp for *rx1,* 368bp for *actb*, 405bp for *dnmt1*;
99 schematic representation in Fig. 1a, Supplementary Fig. 1 for detailed donor design).
100 To amplify the long dsDNA donors we employed a pair of universal primers (5'
101 modified or unmodified as control) complementary to the backbone of the cloning
102 vectors (pDestSC-ATG (Kirchmaier et al., 2013) or pCS2+ (Rupp et al., 1994))
103 encompassing the entire assembled donor cassette (Supplementary Fig. 1).

104 Modified or unmodified long dsDNA donors were subsequently co-injected together
105 with *Cas9* mRNA and the respective locus-specific sgRNA into medaka one-cell stage
106 zygotes (Loosli et al., 1999; Rembold et al., 2006). For all four loci (and all 5'
107 modifications) tested we observed efficient targeting as apparent by the GFP
108 expression within the expected expression domain (Fig. 2a, Supplementary Table 1,
109 Supplementary Fig. 2).
110 The survival rates of embryos injected with Biotin and SpC3 5' modified dsDNA
111 donors did not differ significantly from embryos injected with the unmodified dsDNA
112 control donors (Supplementary Table 1, Supplementary Fig. 2). In contrast, the
113 injection of the A-dT 5' modified dsDNA donors resulted in high embryonic lethality
114 (Supplementary Table 1, Supplementary Fig. 2).
115 We next analyzed the frequency of single-copy HDR events following a careful,
116 limited cycle PCR approach on genomic DNA of GFP expressing embryos injected
117 with unmodified, Biotin, SpC3 5' modified dsDNA donors. Our approach allowed
118 distinguishing alleles without *gfp* integration (i.e. size of wild-type locus) from those
119 generated by HDR and NHEJ respectively and addressed the size of the integration
120 by a locus spanning PCR with a reduced number of PCR cycles (<=30) to omit *in vitro*
121 fusion-PCR artefacts (own data and (Won and Dawid, 2017). To determine the
122 predictive power of GFP expression for perfect integration, we genotyped randomly
123 selected, GFP-expressing embryos using locus primers (Lf / Lr) located distal to the
124 utilized HFs (Supplementary Fig. 1) and addressed the fusion of the *gfp* donor
125 sequence to the target genes (Fig. 2b, Supplementary Figs. 3, 4).
126 Employing unmodified donors, the rate of HDR was very low as evidenced by the
127 predominant amplification of the alleles without *gfp* integration (Fig. 2b,

128 Supplementary Fig. 3). In strong contrast, the 5' modified long dsDNA donors
129 resulted in efficient HDR already detectable in the injected generation for all
130 targeted loci. For the *gfp* tagging of *rx2*, 6 out of 10 randomly selected, GFP-
131 expressing embryos showed precise HDR-mediated single-copy integration in F0
132 (Supplementary Fig. 3) as sequence confirmed by the analysis of the locus
133 (Supplementary Fig. 4). Thus, 9.5% of injected and surviving zygotes showed precise
134 HDR-mediated single-copy integration (15.8% of the injected zygotes expressed GFP;
135 60% of those showed the precise single-copy integration; Supplementary Table 1).
136 For the *gfp* tagging of *actb* 46.5% of the injected zygotes expressed GFP, 35% of
137 which (7 out of 20 randomly selected, GFP-expressing embryos) showed precise
138 HDR-mediated single-copy integration in F0, accounting for 16.3% of the initially
139 injected zygotes (Supplementary Table 1).
140 In the case of *dnmt1*, the rate of precise HDR-mediated single-copy integration was
141 even higher, since full gene functionality is required for the progression of
142 development and embryonic survival. Here, strikingly, all GFP-expressing embryo
143 showed the desired perfect integration.
144 We observed the highest efficiency of HDR targeting by 5' modified dsDNA for all loci
145 tested for 5'Biotin modified donors (Supplementary Fig. 3). Already in the injected
146 generation we prominently detected and validated the HDR-mediated fusion of the
147 long dsDNA donors with the respective locus (Supplementary Fig. 3). While still
148 giving rise to a high percentage of HDR events, SpC3 5' modified dsDNA donors also
149 resulted in elevated levels of additional bands indicative for the integration of higher
150 order multimers and NHEJ events (Supplementary Fig. 3). Even though increasingly
151 popular, in our hands the use of RNPs (Cas9 protein and respective sgRNA) did not

152 even get close to the efficiency achieved by co-injection of Cas9 mRNA and the
153 corresponding sgRNA assessed by gene targeting as described above.
154 The precise integration detected in the injected generation was successfully
155 transmitted to the next generation (Fig. 3, Supplementary Figs. 4,5). For *gfp-rx2*, 9 %
156 of fish originating from the initially injected embryos successfully transmitted the
157 precisely modified locus to the next generation (15.8% of the injected embryos
158 expressed GFP; 4 out of 7 GFP transmitting founder fish were also transmitting the
159 precise single integration of the *gfp* donor cassette). For *gfp-rx1,* 3.9% of fish
160 originating from the initially injected embryos were transmitting the precise single
161 copy integrate to the next generation (13.5% of injected embryos expressed GFP; 2
162 out of 7 GFP transmitting founder fish were also transmitting the precise single
163 integration of the *gfp-rx1* donor cassette). For *dnmt1*, the high rate of precise HDR-
164 mediated single-copy integration observed in the injected generation was fully
165 maintained in the transmission to the next generation due to the absolute
166 requirement of a functional/functionally tagged version of the locus. As we found in
167 the course of our study, the precise integration of the *gfp* donor cassette into the
168 *actb* locus results in late embryonic lethality. Consequently, stable transgenic lines
169 could not be established.
170 To estimate the timepoint of HDR events in the injected embryos, we investigated
171 the actual rate of mosaicism in the germline as reflected by the germline
172 transmission rate. For *gfp-rx2*, this rate ranged from 0.8% up to 12.9% indicating an
173 HDR event earliest at the 4-cell stage (assuming that only a single event occurred per
174 blastomere). In the case of *gfp-rx1,* HDR did not occur at the one cell stage but
175 rather later (2-8 cell stage as reflected by germline transmission rates of 23.9% and

176 5.8% respectively). Thus, for both cases, the transmission rates of the perfectly
177 tagged locus reflect a level of mosaicism indicative for an HDR event between the 4
178 and 32 cell stage.
179 We addressed the nature of the insertion predicted to be single-copy by a
180 combination of PCR and expression studies. We validated the genomic organization
181 of the *gfp-rx2* (Fig. 3a) and *gfp-rx1* knock-in in homozygous F2 animals by genomic
182 sequencing (Supplementary Fig. 4c) and Southern Blot (Southern, 2006) analysis (Fig.
183 3b, 3b', Supplementary Fig. 5). In both cases, we detected a single band indicative
184 for a single-copy HDR-mediated integration, when probing digested genomic DNA of
185 F2 *gfp-rx2*$^{+/+}$ and *gfp-rx1*$^{+/+}$ knock-in fish respectively. We used enzyme combinations
186 releasing the *gfp-rx2* region including the HFs (BglII/HindIII, Fig. 2b-b') or cutting in
187 the 5' HF (ScaI/HindIII, Fig. 3b, b'). For *gfp-rx1* we released the 5' flanking region
188 including the donor cassette (HindIII/XmaI) or the respective 3' flanking region and
189 donor cassette (NcoI/EcoRI) (Supplementary Fig. 5).
190 This analyses crucially validated the PCR based predictions and sequencing results.
191 Furthermore, transcript analysis in *gfp-rx2* homozygous F3 embryos exclusively
192 uncovered a single fusion *gfp-rx2* transcript (Fig. 3c, 3c'). This molecular analysis
193 confirmed that the 5'Biotin modification of the long dsDNA donor promoted precise
194 single-copy HDR-mediated integration with high efficiency.
195 Taken together the simple 5'Biotin modification at both ends of long dsDNA donors
196 by conventional PCR amplification presented here provides the means to favor HDR
197 without interfering with the cellular DNA repair machinery.
198 For efficient recombination the quality of the modified primers, i.e. the fraction of
199 primers actually labeled with biotin and therefore the quality of the 5' protected

200 long ds DNA PCR product is essential. The integration of 5' modified PCR fragments
201 larger than 2kb does in principle not pose a problem. We already successfully
202 integrated cassettes of up to 8.6 kb (data not shown) via HDR by *in vivo* linearization
203 of the donor plasmid (Stemmer et al., 2015). In the approach presented here, the
204 quality of the end-protected PCR product is likely to drop with higher length in part
205 due to the (UV–) nicking in the extraction and purification process. Also, the rapid
206 validation by locus spanning PCR is size limited but eventually Southern blot analysis
207 will resolve the question of a single copy, perfect integration. Irrespective of the
208 donor cassette size, the PCR cycles used to probe for the successful single
209 integration via HDR must not exceed a total of 30 to avoid misleading *in vitro* fusion-
210 PCR artifacts (own data and (Won and Dawid, 2017)).
211 As already mentioned earlier, HDR preferentially occurs during the late S/G2 phase
212 of the cell cycle (Heyer et al., 2010; Hustedt and Durocher, 2017). Varying
213 efficiencies of genome editing via HDR could be due to species-specific differences,
214 in particular of the S/G2 phase of the cell cycle that likely crucially impacts on the
215 rate of HDR. As reported extensively, there is no apparent G2 phase before mid-
216 blastula-transition in amphibia (*Xenopus*) and fish (*Danio rerio*) with the marked
217 exception of the first cleavage, where a G2 phase has been reported (Kimelman,
218 2014). The Germline transmission rates obtained for the tagging of Rx1 and Rx2
219 indicated HDR events after the two-cell stage, predominantly at the 4-cell and
220 subsequent stages. The slower cycling of medaka compared to zebrafish results in an
221 extension of the G2 phase in the first cell cycle by more than 150% (total cycle
222 zebrafish: 45 min (Kimmel et al., 1995), medaka: 65 min (Iwamatsu, 2004)).
223 Assuming a comparable rate of DNA synthesis between the two species, there is

224 more than double the time for S- and M-phase to replicate a genome encompassing
225 roughly a third of the size of zebrafish. This extended cell cycle length is in particular
226 apparent also in the subsequent cycles in medaka (15 min zebrafish (Kimmel et al.,
227 1995), 40 min medaka (Iwamatsu, 2004)). Interestingly, phosphorylation of RNA
228 polymerase, a prerequisite for the expression of the first zygotic transcripts has been
229 reported to start at the 64-cell stage in medaka (Kraeussling et al., 2011) and
230 asynchronous divisions, a hallmark of MBT, are observed already at the transition of
231 the 16- to 32-cell stage (Kraeussling et al., 2011), suggesting species-specific
232 differences in the onset of zygotic transcription and consequently the lengthening of
233 the cell cycle.
234 Our approach facilitates the highly efficient detection of HDR events by GFP tagging
235 even in non-essential genes. Other than in non-modified dsDNA donors, the locus-
236 specific expression of GFP is an excellent predictor for precise, single-copy HDR-
237 mediated integration already in the injected generation. This allows an easy
238 selection and results in HDR rates in GFP positive embryos of up to 60% in the
239 injected generation. This rate can even be higher in essential loci, such as *dnmt1*,
240 where the full functionality of the (modified) gene under investigation is required for
241 the survival of the affected cells, tissues, organs or organisms, thus providing the
242 means for effective positive selection for single, fully functional integrates. It is
243 interesting to note that approximately 400 bp flanking the insertion site in 5' and 3'
244 direction are sufficient for HDR. The use of modified universal primers for the two
245 donor template vectors employed allowed a flexible application of the procedure
246 and ensured a high quality of the PCR generated 5' modified long dsDNA donors.

247 Strikingly, the primer-introduced non-homology regions in the very periphery of the
248 long dsDNA donors did not negatively impact on the HDR efficiency.
249 Taken together, the simplicity and high reproducibility of our proof-of-concept
250 analysis highlight that the presented protection of both 5' ends of long dsDNA
251 donors prevent multimerization and promote precise insertion/replacement of DNA
252 elements, thus facilitating functional studies in basic research as well as therapeutic
253 interventions.
254

255 **Methods**

256 A step-by-step protocol is available as a Supplementary Protocol and at Protocol
257 Exchange.

258

259 **Fish maintenance**

260 All fish are maintained in closed stocks at Heidelberg University. Medaka (*Oryzias*
261 *latipes*) husbandry (permit number 35–9185.64/BH Wittbrodt) and experiments
262 (permit number 35-9185.81/G-145/15 Wittbrodt) were performed according to local
263 animal welfare standards (Tierschutzgesetz §11, Abs. 1, Nr. 1) and in accordance
264 with European Union animal welfare guidelines (Bert et al., 2016). The fish facility is
265 under the supervision of the local representative of the animal welfare agency.
266 Embryos of medaka of the wildtype Cab strain were used at stages prior to hatching.
267 Medaka was raised and maintained as described previously (Köster et al., 1997).

268

269 **Donor plasmids**

270 *Rx2* and *actb* template plasmids for *gfp* donor cassette amplification are described in
271 Stemmer et al. (Stemmer et al., 2015) and were generated by GoldenGATE assembly
272 into the pGGDestSC-ATG destination vector (addgene #49322) according to
273 Kirchmaier et al. (Kirchmaier et al., 2013). See Supplementary Table 2 for primers
274 used to amplify respective homology flanks. The *dnmt1 gfp* plasmid was cloned with
275 homology flanks (5' HF 402 bp, primers dnmt1 5'HF f / dnmt1 5'HF r; 3' HF 405 bp,
276 dnmt1 3'HF f/ dnmt1 3'HF r) that were PCR amplified with Q5 polymerase (New
277 England Biolabs, 30 cycles) from wildtype medaka genomic DNA. *mgfp-flexible linker*
278 was amplified with primers mgfpf / mgfpr. The respective restriction enzyme was

279 used to digest the amplicons (5'HF: SalI HF (New England Biolabs), AgeI HF (New
280 England Biolabs); *mgfp-flexible linker*: AgeI HF (New England Biolabs), SpeI HF (New
281 England Biolabs); 3'HF: SpeI HF (New England Biolabs), NotI HF (New England
282 Biolabs)) followed by gel purification (Analytik Jena) and ligation into pCS2+ (Rupp et
283 al., 1994) (digested with SalI HF (New England Biolabs), NotI HF (New England
284 Biolabs)). The *rx1 gfp* plasmid was cloned with homology flanks (5'HF 430 bp,
285 primers rx1 5'HF f / rx1 5'HF r; 3' HF 508 bp, rx1 3'HF f/ rx1 3'HF r) that were PCR
286 amplified with Q5 polymerase (New England Biolabs, 30 cycles) from wildtype
287 medaka genomic DNA. All primers were obtained from Eurofins Genomics.
288
289 **Donor amplification**
290 We designed universal primers that match the pGGDestSC-ATG (Kirchmaier et al.,
291 2013) (addgene #49322) or pCS2+ (Rupp et al., 1994) backbone encompassing the
292 assembled inserts (i.e. the *gfp* donor cassette). Unmodified control primers (pDest f,
293 pDest r, pCS2 f, pCS2 r) were ordered from Eurofins Genomics. Modified primers
294 obtained from Sigma-Aldrich (pDest f mod, pDest r mod, pCS2 f mod, pCS2 r mod)
295 consist of the same sequences with phosphorothioate bonds in the first five
296 nucleotides and 5'moiety extension: 5'Biotin, 5'Amino-dT or 5'Spacer C3.
297 The dsDNA donor cassettes were amplified by PCR using 1x Q5 reaction buffer, 200
298 µM dNTPs, 200 µM primer forward and reverse and 0.6 U/µl Q5 polymerase (New
299 England Biolabs). Conditions used: initial denaturation at 98°C 30 sec, followed by 35
300 cycles of: denaturation at 98°C 10 sec, annealing at 62°C 20 sec and extension at
301 72°C 30 sec per kb and a final extension step of 2 min at 72°C. The PCR reaction was
302 treated with 20 units of DpnI (New England Biolabs) to remove any plasmid template

303 following gel purified using the QIAquick Gel Extraction Kit (Qiagen, 28706) and
304 elution with 20µl nuclease-free water.
305
306 The *LacZ* cassette of the pGGDestSC-ATG (Kirchmaier et al., 2013) (addgene #49322)
307 which served as DIG labelled dsDNA fragment to test *in vivo* multimerization was
308 amplified via Q5-PCR as above using a mixture of 200 µM dATP, dCTP, dGTP, 170 µM
309 dTTP and 30 µM DIG-dUTP and purified as detailed.
310
311 **sgRNA target site selection**
312 *Dnmt1* sgRNAs were designed with CCTop as described in Stemmer et al. (Stemmer
313 et al., 2015). sgRNAs for *rx2* and *actb* were the same as in Stemmer et al. (Stemmer
314 et al., 2015). The following target sites close to the translational start codons were
315 used (PAM in brackets): *rx2* (GCATTTGTCAATGGATACCC[TGG]), *actb*
316 (GGATGATGACATTGCCGCAC[TGG]), *dnmt1* (TGACATCGTCTGGCAAAGAC[AGG]) and
317 *rx1* (AAATGCATGAGAGCGTCT[GGG] and CTCTCATGCATTTATCAC[TGG]) . Cloning of
318 sgRNA templates and *in vitro* transcription was performed as detailed in Stemmer, et
319 al. (Stemmer et al., 2015).
320
321 ***In vitro* transcription of mRNA**
322 The pCS2+ *Cas9* plasmid was linearized using NotI and the mRNA was transcribed *in*
323 *vitro* using the mMessage_mMachine SP6 kit (ThermoFisher Scientific, AM1340).
324
325 **Microinjection and screening**

326 Medaka zygotes were injected with 10 ng of DIG-labelled donors and were allowed
327 to develop until 2, 4 and 6 hours post injection. For the CRISPR/Cas9 experiments,
328 medaka zygotes were injected with 5 ng/µl of either unmodified and modified long
329 dsDNA donors together with 150 ng/µl of *Cas9* mRNA and 15-30 ng/µl of the gene-
330 specific sgRNAs. Injected embryos were maintained at 28°C in embryo rearing
331 medium (ERM, 17 mM NaCl, 40 mM KCl, 0.27 mM $CaCl_2$, 0.66 mM $MgSO_4$, 17 mM
332 Hepes). One day post-injection (dpi) embryos were screened for survival, GFP
333 expression was scored at two dpi.
334
335 **Southern Blot**
336 In order to check for multimerization of unmodified and modified donors, we used a
337 modified Southern Blot approach. In brief, embryos were injected with DIG-labelled
338 donors which were PCR-amplified from pGGDestSC-ATG (addgene #49322) using
339 primers pDest f/pDest r (*LacZ* cassette) harboring either no 5' moiety or one of the
340 following: 5'Biotin, Amino-dT or Spacer C3. 2, 4 and 6 hours post injection, 30
341 embryos were lysed in TEN buffer plus proteinase K (10 mM Tris pH 8, 1 mM EDTA,
342 100 mM NaCl, 1 mg/ml proteinase K) at 60°C overnight. DNA was ethanol
343 precipitated after removal of lipids and proteins by phenol-chloroform extraction.
344 Total DNA was resuspended in TE buffer (10 mM Tris HCl pH 8.0, 1 mM EDTA pH 8.0).
345 200 ng of each sample was run on a 0.8% agarose gel. As a control, 100 pg of
346 uninjected donor PCR product were loaded. The agarose gel was transferred to a
347 nylon membrane overnight using 10x SSC (1.5 M NaCl, 0.15 M $C_6H_5Na_3O_7$) as transfer
348 solution. The cross-linked membrane was directly blocked in 1% w/v blocking
349 reagent (Roche) in 1x DIG1 solution (0.1 M maleic acid, 0.15 M NaCl, pH 7.5) and the

350 labeled DNA was detected using CDP star (Roche) following the manufacturer's
351 instructions.
352 In order to check for copy number insertions in the *gfp-rx2* and *gfp-rx1* transgenic
353 lines, genomic DNA was isolated as described above from F2 embryos expressing
354 GFP. 10 µg digested genomic DNA were loaded per lane on a 0.8% agarose gel and
355 size fractionated by electrophoresis. The gel was depurinated in 0.25 N HCl for
356 30 min at room temperature, rinsed with H_2O, denatured in 0.5 N NaOH, 1.5 M NaCl
357 solution for 30 min at room temperature and neutralized in 0.5 M Tris HCl, 1.5 M
358 NaCl, pH 7.2 before it was transferred overnight at room temperature onto a
359 Hybond membrane (Amersham). The membrane was washed with 50 mM NaPi for 5
360 min at room temperature, then crosslinked and pre-hybridized in Church
361 hybridization buffer (0.5 M NaPi, 7% SDS, 1 mM EDTA pH 8.0) at 65°C for at least 30
362 min. The probe was synthesized from the donor plasmid with primers gfp probe f
363 and gfp probe r using the PCR DIG Probe Synthesis Kit (Roche, 11636090910) and the
364 following PCR protocol: initial denaturation at 95°C for 2 min, 35 cycles of 95°C 30
365 sec, 60°C 30 sec, 72°C 40 sec and final extension at 72°C 7 min. The probe was boiled
366 in hybridization buffer for 10 min at 95°C and the membrane was hybridized
367 overnight at 65°C. The membrane was washed with pre-heated (65°C) Church
368 washing buffer (40 mM NaPi, 1% SDS) at 65°C for 10 min, then at room temperature
369 for 10 min and with 1x DIG1 and 0.3% Tween for 5 min at room temperature. The
370 membrane was blocked in 1% w/v blocking reagent (Roche) in 1x DIG1 solution at
371 room temperature for at least 30 min. The membrane was incubated with 1:10,000
372 anti-digoxigenin-AP Fab fragments (Roche) for 30 min at room temperature in 1%
373 w/v blocking reagent (Roche) in 1x DIG1 solution. Two washing steps with 1x DIG1

374 and 0.3% Tween were performed for 20 min at room temperature, followed by a 5

375 min washing step in 1x DIG3 (0.1 M Tris pH 9.5, 0.1 M NaCl) at room temperature.

376 Detection was performed using 6 µl/ml CDP star (Roche).

377

378

379 **Genotyping**

380 Single injected GFP positive embryos were lysed in DNA extraction buffer (0.4 M
381 Tris/HCl pH 8.0, 0.15 M NaCl, 0.1% SDS, 5 mM EDTA pH 8.0, 1 mg/ml proteinase K) at
382 60°C overnight. Proteinase K was inactivated at 95°C for 10 min and the solution was
383 diluted 1:2 with H_2O. Genotyping was performed in 1x Q5 reaction buffer, 200 µM
384 dNTPs, 200 µM primer forward and reverse and 0.012 U/µl Q5 polymerase and 2 µl
385 of diluted DNA sample and the respective locus primers. The conditions were: 98°C
386 30 sec, 30 cycles of 98°C 10 sec, annealing for 20 sec and 72°C 30 sec per kb
387 (extension time used would allow for detecting potential NHEJ events on both ends
388 of the donor) (rx2 Lf/rx2 Lr: 68°C annealing, 90 sec extension time; rx1 Lf/rx1 Lr: 66°C
389 annealing, 90 sec extension time; actb Lf/actb Lr: 66°C annealing, 84 sec extension
390 time; dnmt1 Lf/dnmt1 Lr: 65°C annealing, 90 sec extension time) and a final
391 extension of 2 min at 72°C. PCR products were analyzed on a 1% agarose gel.
392 Diagnostic GFP PCR here: 63°C annealing, 500 bp, 15sec extension
393

394 **RT-PCR**

395 Total RNA was isolated from 60 homozygous embryos (stage 32) by lysis in TRIzol
396 (Ambion) and chloroform extraction according to the manufacturer's protocol. RNA
397 was precipitated using isopropanol and resuspended in H_2O. cDNA was reverse
398 transcribed with Revert Aid Kit (Thermo Fisher Scientific) after DNAse digestion and
399 inactivation following the manufacturer's instructions. PCR was performed using
400 5'UTRf, 3'UTRr and Q5 polymerase (New England Biolabs): 98°C 30 sec, 35 cycles of
401 98°C 10 sec, annealing 65°C for 20 sec and 72°C 210 sec and a final extension of 2
402 min at 72°C. PCR products were analyzed on a 1.5% agarose gel.

403

404 **Sequencing**

405 Plasmids and PCR fragments were sequenced with the indicated primers by a

406 commercial service (Eurofins Genomics).

407

Acknowledgments:

This research was funded through the German Science funding agency (DFG, CRC 873, Project A3 to J.W.). T.Ta. and E.T. are members of HBIGS, the Heidelberg Biosciences International Graduate School. We are grateful to M. Majewsky, E. Leist and A. Saraceno for fish husbandry. We thank Oliver Gruss (Bonn) and Daigo Inoue (Yokohama) and all members of the Wittbrodt lab for their critical, constructive feedback on the procedure and the manuscript.

Author contributions:

A.G., T.Ta., T.T. and J.W. designed the study, analyzed the data and wrote the manuscript. A.G., T.Ta. and T.T. performed injection experiments and acquired the data. I.T. contributed to the rx1 and rx2 experiments, B.W. conducted genotyping PCR experiments and bred fish lines, T.K. cloned the donor plasmids and sgRNA vectors and generated *Cas9* mRNA and sgRNAs, K.A. established the rx1 knock-in lines, E.T. performed the rx2 Southern blot.

Competing interest statement:

The authors state that there are no competing financial interests

428 **References**

429 Auer, T.O., Duroure, K., De Cian, A., Concordet, J.-P., and Del Bene, F. (2014). Highly
430 efficient CRISPR/Cas9-mediated knock-in in zebrafish by homology-independent DNA
431 repair. Genome Res *24*, 142–153.

432 Bert, B., Chmielewska, J., Bergmann, S., Busch, M., Driever, W., Finger-Baier, K.,
433 Hößler, J., Köhler, A., Leich, N., Misgeld, T., et al. (2016). Considerations for a
434 European animal welfare standard to evaluate adverse phenotypes in teleost fish.
435 Embo J *35*, 1151–1154.

436 Cong, L., Ran, F.A., Cox, D., Lin, S., Barretto, R., Habib, N., Hsu, P.D., Wu, X., Jiang, W.,
437 Marraffini, L.A., et al. (2013). Multiplex Genome Engineering Using CRISPR/Cas
438 Systems. Science *339*, 819–823.

439 Gutschner, T., Haemmerle, M., Genovese, G., Draetta, G.F., and Chin, L. (2016). Post-
440 translational Regulation of Cas9 during G1 Enhances Homology-Directed Repair. Cell
441 Rep *14*, 1555–1566.

442 Heyer, W.-D., Ehmsen, K.T., and Liu, J. (2010). Regulation of Homologous
443 Recombination in Eukaryotes. Annu Rev Genet *44*, 113–139.

444 Hustedt, N., and Durocher, D. (2017). The control of DNA repair by the cell cycle. Nat
445 Cell Biol *19*, 1–9.

446 Iwamatsu, T. (2004). Stages of normal development in the medaka Oryzias latipes.
447 Mech Dev *121*, 605–618.

448 Jinek, M., Chylinski, K., Fonfara, I., Hauer, M., Doudna, J.A., and Charpentier, E.
449 (2012). A programmable dual-RNA-guided DNA endonuclease in adaptive bacterial
450 immunity. Science *337*, 816–821.

451 Kimelman, D. (2014). Cdc25 and the importance of G 2control. Cell Cycle *13*, 2165–
452 2171.

453 Kimmel, C., Ballard, W., Kimmel, S., Ullmann, B., and Schilling, T. (1995). Stages of
454 embryonic development of the zebrafish. Dev Dyn *203*, 253–310.

455 Kirchmaier, S., Lust, K., and Wittbrodt, J. (2013). Golden GATEway cloning--a
456 combinatorial approach to generate fusion and recombination constructs. PLoS ONE
457 *8*, e76117.

458 Köster, R., Stick, R., Loosli, F., and Wittbrodt, J. (1997). Medaka spalt acts as a target
459 gene of hedgehog signaling. Development *124*, 3147–3156.

460 Kraeussling, M., Wagner, T.U., and Schartl, M. (2011). Highly asynchronous and
461 asymmetric cleavage divisions accompany early transcriptional activity in pre-
462 blastula medaka embryos. PLoS ONE *6*, e21741.

463 Loosli, F., Winkler, S., and Wittbrodt, J. (1999). Six3 overexpression initiates the
464 formation of ectopic retina. Genes Dev *13*, 649–654.

465 Mali, P., Esvelt, K.M., and Church, G.M. (2013). Cas9 as a versatile tool for
466 engineering biology. Nat. Methods *10*, 957–963.

467 Maruyama, T., Dougan, S.K., Truttmann, M.C., Bilate, A.M., Ingram, J.R., and Ploegh,
468 H.L. (2015). Increasing the efficiency of precise genome editing with CRISPR-Cas9 by
469 inhibition of nonhomologous end joining. Nat Biotechnol.

470 Reinhardt, R., Centanin, L., Tavhelidse, T., Inoue, D., Wittbrodt, B., Concordet, J.-P.,
471 Martinez-Morales, J.-R., and Wittbrodt, J. (2015). Sox2, Tlx, Gli3, and Her9 converge
472 on Rx2 to define retinal stem cells in vivo. Embo J *34*, 1572–1588.

473 Rembold, M., Lahiri, K., Foulkes, N.S., and Wittbrodt, J. (2006). Transgenesis in fish:
474 efficient selection of transgenic fish by co-injection with a fluorescent reporter
475 construct. Nat Protoc *1*, 1133–1139.

476 Rupp, R.A., Snider, L., and Weintraub, H. (1994). Xenopus embryos regulate the
477 nuclear localization of XMyoD. Genes Dev *8*, 1311–1323.

478 Southern, E. (2006). Southern blotting. Nat Protoc *1*, 518–525.

479 Stemmer, M., Thumberger, T., Del Sol Keyer, M., Wittbrodt, J., and Mateo, J.L.
480 (2015). CCTop: An Intuitive, Flexible and Reliable CRISPR/Cas9 Target Prediction Tool.
481 PLoS ONE *10*, e0124633.

482 Wang, L., Yang, L., Guo, Y., Du, W., Yin, Y., Zhang, T., and Lu, H. (2017). Enhancing
483 Targeted Genomic DNA Editing in Chicken Cells Using the CRISPR/Cas9 System. PLoS
484 ONE *12*, e0169768.

485 Winkler, C., Vielkind, J.R., and Schartl, M. (1991). Transient expression of foreign
486 DNA during embryonic and larval development of the medaka fish (Oryzias latipes).
487 Mol Gen Genet *226*, 129–140.

488 Won, M., and Dawid, I.B. (2017). PCR artifact in testing for homologous
489 recombination in genomic editing in zebrafish. PLoS ONE *12*, e0172802.

490

491

492 **Figure legends**

493

494 **Figure 1. Modification of 5' ends of long dsDNA fragments prevents *in vivo***

495 **multimerization**.

496 (a) Schematic representation of long dsDNA donor cassette PCR amplification with

497 universal primers (black arrows) complementary to the cloning vector backbone

498 outside of the assembled donor cassette (e. g. *gfp* with homology flanks). Bulky

499 moieties like Biotin at the 5' ends of both modified primers (red octagon) prevent

500 multimerization/NHEJ of dsDNA, providing optimal conditions for HDR-mediated

501 single-copy integration following CRISPR/Cas9 introduced DSB at the target locus

502 (grey scissors). Representation of locus (Lf/Lr) and internal *gfp* (Gf/Gr) primers for

503 PCR genotyping of putative HDR-mediated *gfp* integration events. (b) Southern Blot

504 analysis reveals the monomeric state of injected dsDNA fragments *in vivo* for 5'

505 modification with Biotin or Spacer C3. Long dsDNAs generated with control

506 unmodified primers or Amino-dT attached primers multimerize as indicated by high

507 molecular weight ladder apparent already within two hours post-injection (hpi).

508 Note: 5' moieties did not enhance the stability of injected DNA.

509

510 **Figure 2. Modification of 5' ends of long dsDNA fragments promotes HDR-**

511 **mediated single-copy integration**.

512 (a) GFP expression in the respective expression domain after HDR-mediated

513 integration of modified dsDNA *gfp* donor cassettes into *rx2*, *rx1*, *actb* and *dnmt1*

514 ORFs in the injected generation. (b) Individual embryo PCR genotyping highlights

515 efficient HDR-mediated single-copy integration of 5'Biotin modified long dsDNA

516 donors, but not unmodified donor cassettes. Locus PCR reveals band size indicative
517 of single-copy *gfp* integration (asterisk) besides alleles without *gfp* integration (open
518 arrowhead). Amplification of *gfp* donor (white arrow) for control.
519
520 **Figure 3. Single-copy integration of long dsDNA donor establishes stably**
521 **transmitted *gfp-rx2* fusion gene.** (a) F2 homozygous embryos exhibit GFP-Rx2 fusion
522 protein expression in the pattern of the endogenous gene in the retina. (b) Southern
523 Blot analysis of F2 *gfp-rx2* embryos reveals a single band for a digestion scheme
524 cutting outside the donor cassette (BglII/HindIII) or within the 5' donor cassette and
525 in intron 2 (ScaI/HindIII) indicating precise single-copy donor integration. (b')
526 Schematic representation of the modified locus indicating the restriction sites and
527 the domain complementary to the probe used in (b).
528 (c) RT-PCR analysis on mRNA isolated from individual homozygous F3 embryos
529 indicates the transcription of a single *gfp-rx2* fusion mRNA in comparison to the
530 shorter wild-type *rx2* mRNA as schematically represented in (c').
531
532 **Supplementary Figure 1. Schematic representation of the donor plasmids**
533 (a-c) Schematic to-scale representation of respective target locus (a, *rx2*; b, *actb*; c,
534 *dnmt1*) with UTR (white boxes with red outlines) and exons (red boxes) highlighted.
535 Homology flanks (HF, grey), sgRNA target sites (white scissors) and respective locus
536 primers (black arrows, Lf, Lr, see Supplementary Table 2) are indicated. Respective
537 assembled donor plasmid (a, b, Golden GATEway (Kirchmaier et al., 2013) or c,
538 conventional cloning) that served as a template for PCR amplification of
539 unmodified/modified long dsDNA *gfp* donor cassette is depicted below (FL, flexible

540 linker; backbone sequence in blue). Entry vectors (EV) or restriction enzyme sites for
541 cloning are indicated. The position of primers flanking the donor cassette is indicated,
542 modification highlighted by a red octagon.
543
544 **Supplementary Figure 2. Quantification of survival and GFP expression of injected**
545 **embryos**
546 Embryos injected with unmodified or 5'Biotin, Amino-dT or Spacer C3 modified long
547 dsDNA *gfp-rx2* donor cassettes were scored for survival at one dpi, and for GFP
548 expression at two dpi. n, total number of injected embryos.
549
550 **Supplementary Figure 3. 5'Biotin modification of long dsDNA donors strongly**
551 **enhances HDR-mediated integration.**
552 (a) *rx2* locus PCR genotyping of individual GFP-Rx2 positive embryos injected with
553 unmodified or 5'Biotin or Spacer C3 modified long dsDNA *gfp* donor cassettes (green
554 asterisk, single-copy HDR-mediated integration of *gfp*, 2547 bp, open arrowhead, *rx2*
555 allele without *gfp* integration, 1719 bp;). Horizontal bar, individual embryo; L, *rx2*
556 locus PCR with rx2 Lf / rx2 Lr; G, *gfp* internal PCR for control with Gf / Gr. (b)
557 Qualitative summary of band spectrum (single-copy HDR-mediated *gfp* integration,
558 *rx2* allele without *gfp* integration, other) resulting from PCR genotyping in (a).
559 n, number of genotyped GFP-Rx2 expressing embryos.
560
561 **Supplementary Figure 4. Stable germline transmission of the single-copy HDR-**
562 **mediated precise *gfp* integration.**

563 (a) Schematic to-scale representation of the *gfp-rx2* locus with UTR (white boxes
564 with red outlines), exons (red boxes) and homology flanks (HF, grey) highlighted.
565 (b, c) Individual GFP-Rx2 expressing embryos (F0, b; F1, c) were genotyped using
566 primers rx2 Lf / rx2 Lr (black arrows) and sequenced with gfpf and gfpr primers
567 (green arrows).
568
569 **Supplementary Figure 5. Stably transmitted single-copy integration of the *gfp-rx1***
570 **donor cassette.** (a) Southern Blot analysis of F2 *gfp-rx1* embryos reveals a single
571 band for a digestion scheme cutting outside the donor cassette and within the 3'
572 donor cassette (HindIII/XmaI) or within the 5' donor cassette and in intron 1
573 (NcoI/EcoRI) indicating precise single-copy donor integration. (a') Schematic
574 representation of the modified locus indicating the restriction sites and the domain
575 complementary to the probe used in (a).
576

577 **Supplementary Table 1. Analysis of injected embryos.**

578 Embryos injected with unmodified or modified (5'Biotin, Amino-dT, Spacer C3) long

579 dsDNA *gfp* donor cassettes matching the *rx2*, *actb* or *dnmt1* locus, were scored for

580 GFP expression and survival. Injections without *Cas9* mRNA for control.

581

locus	***rx2***						***actb***		***dnmt1***	
modification	-	-	Biotin	Biotin	A-dT	SpC3	-	Biotin	-	Biotin
Cas9	-	+	-	+	+	+	+	+	+	+
Total injected	93	640	133	474	379	395	65	105	94	105
GFP positive	0	41	0	69	29	65	17	33	11	9
dead	3	54	1	38	192	87	15	34	41	4
%GFP/surviving	0.00	7.00	0.00	15.83	15.51	21.10	34.00	46.48	20.75	8.91
% death rate	3.23	8.44	0.75	8.02	50.66	22.03	23.08	32.38	43.62	3.81

582

583

584 **Supplementary Table 2. Oligonucleotides used in this work.**

585 Restriction enzyme sites used for cloning of PCR amplicons are indicated in italics.
586 Substituted nucleotides to facilitate T7 *in vitro* transcription of the sgRNA
587 oligonucleotides are shown in small letters (Stemmer et al., 2015). Locus primers
588 forward (Lf) and reverse (Lr) of respective gene loci, *gfp* primers forward (Gf) and
589 reverse (Gr), *gfp* sequencing primers gfpf and gfpr and primers to amplify the *mgfp-*
590 *flexible linker*, as well as the *gfp* probe for Southern Blot analysis, are given. Asterisks
591 indicate phosphorothioate bonds, "5'moiety" was either 5'Biotin, Amino-dT or
592 Spacer C3 in the pDest f mod, pDest r mod, pCS2 f mod and pCS2 r mod primers.
593

primer name	**primer sequence 5'-3'**
rx2	
rx2 5'HF f (BamHI)	GCC*GGATCC*AAGCATGTCAAAACGTAGAAGCG
rx2 5'HF r (KpnI)	GCC*GGTACC*CATTTGGCTGTGGACTTGCC
rx2 3'HF f (BamHI)	GCC*GGATCC*CATTTGTCAATGGACACGCTTGGGATGGTGGACG AT
rx2 3'HF r (KpnI)	GCC*GGTACC*TGGACTGGACTGGAAGTTATTT
rx2 sgRNA f	TAgGCATTTGTCAATGGATACCC
rx2 sgRNA r	AAACGGGTATCCATTGACAAATG
rx2 Lf / 5'UTRf	TGCATGTTCTGGTTGCAACG

rx2 Lr	AGGGACCATACCTGACCCTC
3'UTRr	GCGACAGCTATTCCACATAAAAAC
actb	
actb 5'HF f (BamHI)	GG*GGATCC*CAGCAACGACTTCGCACAAA
actb 5'HF r (KpnI)	GG*GGTACC*GGCAATGTCATCATCCATGGC
actb 3'HF f (BamHI)	GG*GGATCC*GACGACGATATAGCTGCACTGGTTGTTGACAACG GATCTG
actb 3'HF r (KpnI)	GG*GGTACC*CAGGGGCAATTCTCAGCTCA
actb sgRNA f	TAGGATGATGACATTGCCGCAC
actb sgRNA r	AAACGTGCGGCAATGTCATCAT
actb Lf	GTCCGAGTTGAGGGTGTCTG
actb Lr	CATGTGCTCCACTGTGAGGT
dnmt1	
dnmt1 5'HF f (SalI)	AATTT*GTCGAC*GCTTTGACAGTTAACCTACACG
dnmt1 5'HF r (AgeI)	AATTT*ACCGGT*CGTAACTGCAAACTAAAAAATAAAAC
dnmt1 3'HF f (SpeI)	AATTT*ACTAGT*ATGCCATCCAGAACGTCCTTATCTCTACCAGAC GATGTCAGAAAAAGGTAC
dnmt1 3'HF r	AATTT*GCGGCCGC*CTACACATATTGTCTGTGATAC

(NotI)	
mgfpf (*AgeI*)	AATTT*ACCGGT*ACTAGTACCATGAGTAAAGGAGAAGAACTTTT CAC
mgfpr (*SpeI*)	AATTT*ACTAGT*CGCGGCTGCACTTCCACCGCCTCCCGATCCGCC ACCGCCAGAGCCACCTCCGCCTGAACCGCCTCCACCGCTCAGG CTAGCTTTGTATAGTTCATCCATGCCATG
dnmt1 sgRNA f	TAgGACATCGTCTGGCAAAGAC
dnmt1 sgRNA r	AAACGTCTTTGCCAGACGATGT
dnmt1 Lf	CTCAATGTAAACACTTCGTGTCGCTTC
dnmt1 Lr	TTGCATGCATATTCAAAGTTGTCAAAG

rx1	
rx1 5'HF f (BamHI)	GCC*GGATCC*GCATCCGAAAGGTAAGGACTGCAAACC
rx1 5'HF r (KpnI)	GCC*GGTACC*CATGAGAGCGTCTGGGCTCTGACC
rx1 3'HF f (BamHI)	GGC*GGATCC*CATTTATCACTCGATACCATGAGCA
rx1 3'HF r (KpnI)	GGC*GGTACC*TTCCAGTTTAAGAACATCCCCTCT
rx1 sgRNA1 f	TAggAAATGCATGAGAGCGTCT
rx1 sgRNA1 r	AAACAGACGCTCTCATGCATTT
rx1 sgRNA2 f	TAggCTCTCATGCATTTATCAC
rx1 sgRNA2 r	AAACGTGATAAATGCATGAGAG
rx1 Lf	CTTTGCTGTTTTGAGAATTGCACC
rx1 Lr	GAGACCGAACGATGACAATAACAC
Backbone primers for *gfp* cassette amplification	
pDest f (control)	CGAGCGCAGCGAGTCAGTGAG
pDest r (control)	CATGTAATACGACTCACTATAG

pDest f mod	5'moiety-C*G*A*G*C*GCAGCGAGTCAGTGAG
pDest r mod	5'moiety-C*A*T*G*T*AATACGACTCACTATAG
pCS2 f	CCATTCAGGCTGCGCAACTG
pCS2 r	CACACAGGAAACAGCTATGAC
pCS2 f mod	5'moiety-C*C*A*T*T*CAGGCTGCGCAACTG
pCS2 r mod	5'moiety-C*A*C*A*C*AGGAAACAGCTATGAC
diagnostic *gfp* primer	
Gf	ATGGCAAGCTGACCCTGAAGTTCATCTGCACCACCGGCAAGC
Gr	CTCAGGTAGTGGTTGTCG
gfpf	GCTCGACCAGGATGGGCA
gfpr	CTGAGCAAAGACCCCAACGAGAAGCGCGATCACATG
gfp probe f	GTGAGCAAGGGCGAGGAGCT
gfp probe r	CTTGTACAGCTCGTCCATG

Figure 1

Gutierrez, Tavhelidse, Thumberger et al.

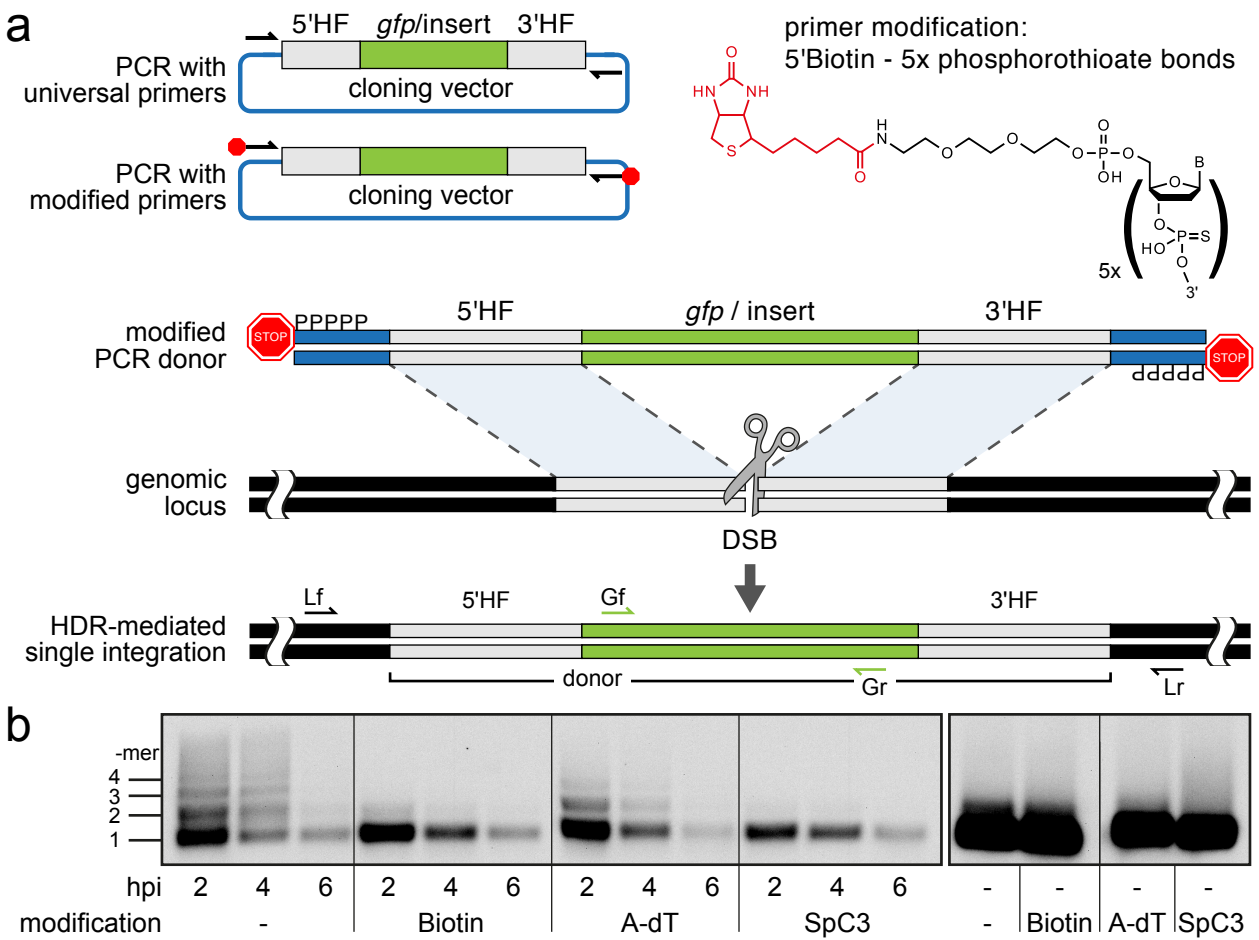

Figure 2 Gutierrez, Tavhelidse, Thumberger et al.

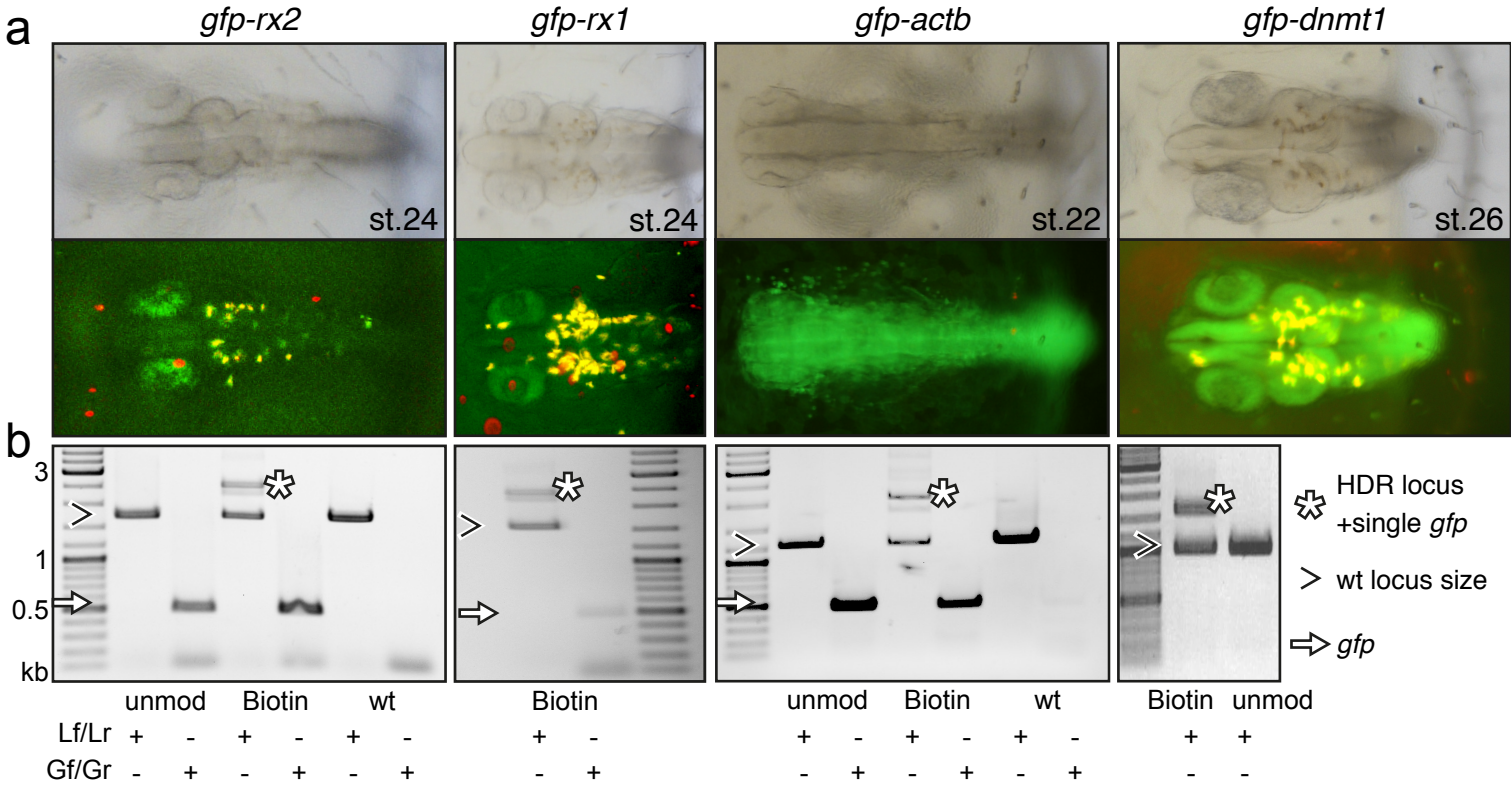

Figure 3

Gutierrez, Tavhelidse, Thumberger et al.

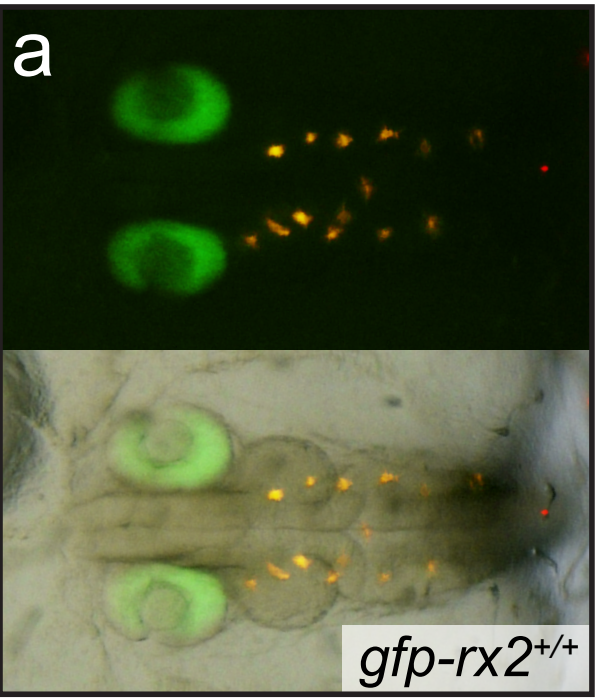

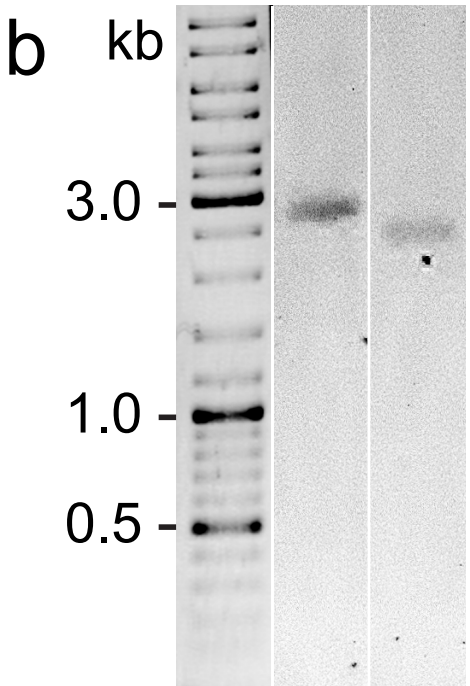

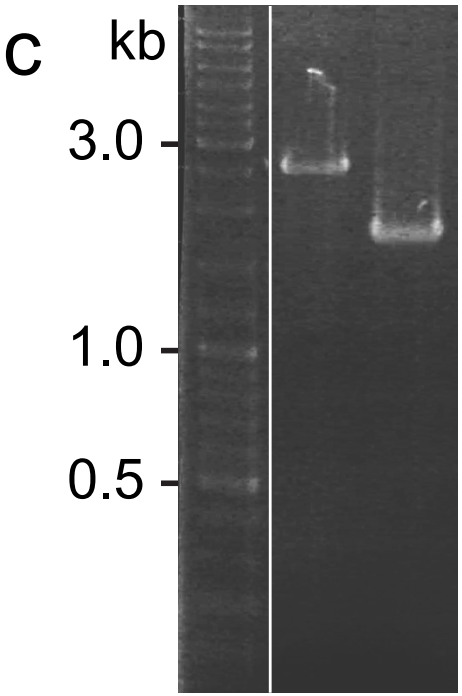

BglII	+	-
ScaI	-	+
HindIII	+	+
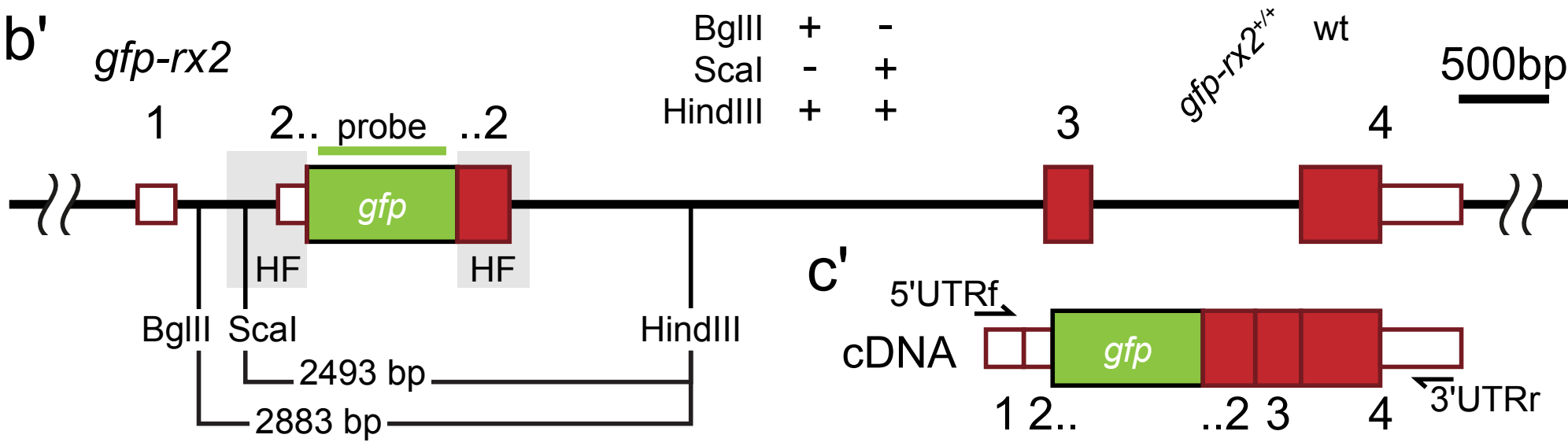
gfp-rx2+/+ wt