Cultural background influences electrical stimulation effects on the social brain

Martin, A. K.[1] Su, P.[1], & Meinzer, M.[1]

[1] The University of Queensland, UQ Centre for Clinical Research, Brisbane, Australia

ABSTRACT

Cultural background influences social cognition, however no study has examined brain stimulation differences attributable to cultural background. 104 young adults [52 South-East Asian Singaporeans (SEA); 52 Caucasian Australians (CA)] received anodal high-definition transcranial direct current stimulation (HD-tDCS) to the dorsomedial prefrontal cortex (dmPFC) or the right temporoparietal junction (rTPJ). Participants completed tasks with varying demands on self-other processing. At baseline, SEA showed greater self-other integration than CA. Anodal HD-tDCS to the dmPFC resulted in the CA performing closer to the SEA. Baseline performance on a mental rotation task and the self-reference effect in memory (SRE) was comparable between groups. In the combined sample, rTPJ HD-tDCS decreased interference from the egocentric perspective during mental rotation and dmPFC HD-tDCS removed the SRE. Stimulation effects were comparable when baseline performance was comparable. When baseline performance differed, stimulation differences were identified. Therefore, cultural background is an important consideration in social brain stimulation studies.

Keywords: self-construal; visual perspective taking; cross-cultural; self-reference effect; mPFC; rTPJ

INTRODUCTION

Social cognition refers to the broad range of cognitive processes that facilitate social behaviour. Social cognition is shaped by societal influences such as the cultural background present throughout development. For example, how the notion of self is defined in relation to others is thought to be culturally specific. People from East Asia, who are generally organized in more prototypically collectivistic societies (Markus & Kitayama, 1991), may process social information in a more integrative fashion whereby the self is defined in relation to others. It has also been suggested that the East Asian self is more relational, whereby the demands of the situation override internalized attributes (Heine, 2001). On the contrary, people from more individualistic oriented cultural backgrounds, such as Western societies, tend to position the self as distinct from others (Markus & Kitayama, 1991). Despite studies demonstrating differences in social cognition and the underlying social brain dependent on cultural background (Han et al., 2013), no study to date has investigated whether social brain stimulation is mediated by cultural background.

A key component to social cognition is the ability to both integrate and distinguish between processes relevant to the self and to another. Such ability is considered key for higher-order social cognitive functioning such as empathy and theory of mind (ToM). Individualistic or collectivistic self-construal has been shown to influence social cognition, in particular those that manipulate self-other processing (Han et al., 2013; Kessler, Cao, O'Shea, & Wang, 2014; Sparks, Cunningham, & Kritikos, 2016; Wu & Keysar, 2007). Visual perspective taking is considered a lower-level cognitive process thought to be relevant for empathy and ToM with measurable demands on self-other integration and distinction (Apperly & Butterfill, 2009). Cultural differences have previously been identified on VPT tasks. For example Wu & Keyser (2007) found that Chinese students were better than American Caucasian students at taking their partner's perspective in a communication task. Using a VPT task requiring line of sight judgements (VPT level one), Kessler & colleagues (2014) demonstrated a greater egocentric bias in those from a Western culture compared to those from an East Asian cultural background with no difference on a VPT task requiring mental rotation (VPT level two).

Self-other processing is relevant across several cognitive domains including episodic memory. The self-reference effect (SRE) refers to the phenomenon whereby people recall or recognise information with greater accuracy if encoded in relation to the self (Symons & Johnson, 1997). Again, this phenomenon is culturally specific, with those from an East Asian background showing less of a self-reference effect when the other is a family member. However, the SRE is comparable to that of Western participants when the other is not a personal acquaintance (Sparks et al., 2016).

Two key hubs of the social brain associated with the integration and distinction between self and other are the dorsomedial prefrontal cortex (dmPFC) and the right temporoparietal junction (rTPJ) (Ferrari et al., 2016; Santiesteban, Banissy, Catmur, & Bird, 2012; Wittmann et al., 2016). Recently, we have demonstrated that high-definition trabnscranial direct current stimulation (HD-tDCS) to the dmPFC and rTPJ, can produce regional and task specific effects on self-other processes (Martin, Dzafic, Ramdave, & Meinzer, 2017; Martin, Huang, Hunold, & Meinzer, 2018). Excitatory stimulation to the dmPFC increased the integration of the other

(allocentric) perspective into the self (egocentric) perspective across explicit VPT tasks and removed the SRE in episodic memory. Excitatory stimulation to the rTPJ resulted in a selective effect on reducing the egocentric interference when making an embodied rotation into an alternate perspective.

Cultural background has also been demonstrated to shape the underlying brain-behaviour relationship, especially in the medial prefrontal cortex (Han et al., 2013; Harada, Li, & Chiao, 2010; Ma, Bang, et al., 2014; Park & Huang, 2010). This would imply that cultural background is a potential source of variability in the effects of non-invasive brain stimulation. Therefore, the aims of the present study were to identify replicable effects of HD-tDCS on social cognition and identify unique differences due to cultural background. As culture is not a homogenous construct, self-construal will be assessed in the South-East Asian (SEA) participants using a multi-dimensional measure (Vignoles et al., 2016) and exploratory analyses conducted to further assess culturally specific effects of brain stimulation. Self-construal has previously been shown to influence social cognition (Colzato, de Bruijn, & Hommel, 2012; Kühnen, 2009) and underlying brain-behaviour relationships, especially the mPFC (Chen, Wagner, Kelley, & Heatherton, 2015; Li et al., 2018; Liu, Wu, Petti, Wu, & Han, 2018; Ma, Wang, et al., 2014). However, no study to date has investigated the relationship between self-construal and focal brain stimulation response.

In line with previous literature, we hypothesise that compared with Caucasian Australians (CA), SEA will show a greater congruency effect in the level one VPT tasks but similar baseline performance on level two VPT and similar extent of the SRE in episodic memory. Anodal stimulation to the dmPFC will result in greater congruency effects across both level one and two tasks and a reduction/removal of the SRE. Anodal stimulation to the rTPJ will result in reduced interference from the egocentric perspective only during the level two VPT task.

METHOD

Participants

Fifty-two Participants from Singapore, residing in Brisbane, Australia were recruited and stratified to receive either dmPFC or rTPJ anodal HD-tDCS in a sham-controlled, double-blinded, repeated-measures design. The groups were matched for age and gender. A cohort of 52 Caucasian Australians (CA) served as a comparison group (data already published see (Martin, Huang, et al., 2018)). The CA and South-East Asian (SEA) groups were matched for age (23.4 v 23.2yrs, BF_{10}= 0.22) and gender (13 M/F for each group and stimulation site). A power analysis was computed using G*Power 3.1 indicating a sample size of 96 as adequate power (0.8) with alpha set at 0.05. A sample of 104 was used to guard against dropout and maintain identical sample sizes with a previous study in Caucasian Australians only (Martin, Huang, et al., 2018). All participants were tDCS-naïve and had no history of psychiatric or neurological disorder and reported no psychoactive substance or medication use. All participants provided written consent in accordance with the Declaration of Helsinki (1991; p1194), they completed a safety screening form to ensure they were safe to participate. All were provided with a small monetary compensation. The ethics committee of The University of Queensland granted ethical approval.

Baseline Testing

Participants completed the Hospital Anxiety and Depression Scale (HADS) (Zigmond & Snaith, 1983) and the Autism-Spectrum Quotient (Baron-Cohen, Wheelwright, Skinner, Martin, & Clubley, 2001). Baseline cognitive testing was performed to ensure participants were within age appropriate norms. This included the Stroop Test, phonemic and semantic verbal fluency, and the following tests from the CogState® computerized test battery (http://cogstate.com): International shopping list, identification test, one-back, two-back, set-switching task, continuous paired-associates learning test, social-emotional cognition test, and the International shopping list – delayed recall.

Transcranial Direct Current Stimulation (tDCS)

Stimulation was administered using the one-channel direct current stimulator (DC-Stimulator Plus®, NeuroConn) with two concentric rubber electrodes (Gbadeyan, Steinhauser, McMahon, & Meinzer, 2016). The centre electrode was 2.5cm in diameter for both the dmPFC and rTPJ sites. The return electrode was 9.2/11.5 cm inner/outer in diameter for the dmPFC site, whereas a smaller electrode of 7.5/9.8 cm was used for the rTPJ site, due to the position of the right ear. Current modelling and safety information for these montages are presented in detail in previous studies (Gbadeyan et al., 2016; Martin, Huang, Hunold, & Meinzer, 2017; Martin, Huang, et al., 2018). Electrodes were attached using an adhesive conductive gel (Weaver Ten20® conductive paste) and held firmly in place using an elastic EEG cap. Both dmPFC and rTPJ sites were identified using the 10-20 International EEG system. The dmPFC was located by finding 15% of the distance from the Fz towards the Fpz. The rTPJ was located by finding CP6. For both sham and anodal stimulation conditions, the current was ramped up to 1mA over 40 secs before ramping down over 5 secs. In the anodal stimulation condition the current remained at 1mA for 20 minutes prior to ramping down. Researchers used the "study-mode" of the DC-Stimulator to achieve double-blinding. Stimulation sessions were at least 3 days apart to avoid carry-over effects.

Visual Perspective Taking Task

The visual perspective taking (VPT) task has been described in detail previously (Martin, Dzafic, et al., 2017; Martin, Huang, et al., 2018; Martin, Perceval, et al., 2018). In brief, three separate tests were administered measuring implicit, explicit level one and explicit level two. All levels involved a street scene with either an avatar or traffic light with 1-4 tennis balls present. The avatar/ traffic light was in 1 of 3 locations on the street; far, middle, or near (see (Martin, Huang, et al., 2018) for more details). The traffic light was a directional control intended to direct attention in a similar manner to the avatar but crucially without the ability to hold a perspective. This was of particular interest for inducing an implicit VPT effect, where participants should respond slower when the scene is incongruent with the hypothetical view of the avatar but not the traffic light (Apperly & Butterfill, 2009). There were 176 trials in each VPT level. For the implicit this was divided into 4 equal groups of 44 across the four conditions (avatar congruent, avatar incongruent, light congruent, light incongruent). For the two explicit tasks, the trials were divided into 8 equal groups of 22 to accommodate both egocentric and allocentric conditions. All conditions were balanced for number and location of tennis balls, and location of avatar and traffic light. The trials were randomised into 4

versions to avoid order effects and provide different versions between sessions. Participants always completed the VPT tasks in the following order; implicit, explicit level one, and explicit level two. Participants were instructed to answer as quickly and accurately as possible. A fixation cross was presented for 500msec prior to each trial. In the explicit tasks, a screen with You or Other was presented for 750msecs after the fixation cross to signal whether the perspective to take was the egocentric or allocentric.

The task was designed to keep errors low and therefore only response times were of interest in the current study. The main outcome of interest was the congruency effect (incongruent – congruent) for both egocentric and allocentric conditions. The avatar and traffic light factor was only of interest in the implicit VPT task and was collapsed across for the explicit tasks, similar to previous studies (Martin, Dzafic, et al., 2017; Martin, Huang, et al., 2018; Martin, Perceval, et al., 2018; Santiesteban, Catmur, Hopkins, Bird, & Heyes, 2014).

Implicit VPT

Initially, participants were asked to answer as quickly and as accurately as possible "How many tennis balls can you see?" The answer was between 1-4. This was considered an implicit task as participants only responded from the egocentric perspective and were not directed to the perspective of the avatar in the scene.

Explicit level one

In the level one task, participants were instructed to answer how many tennis balls they could see or how many the avatar could see, or if a traffic light in the scene, how many balls the light would shine on directly? The answer was between 1-4 for the congruent and incongruent egocentric conditions and congruent allocentric conditions. To maintain four options, the incongruent allocentric condition contained between 0-3 tennis balls.

Explicit level two

In the level two task, participants were now required to make a laterality judgement and answer "can you see more tennis balls on the left/right/same?" When taking the allocentric perspective, participants answered whether the avatar could see more balls on the left/right/same or whether the traffic light would directly shine light on more balls on the left/right/same?

Self-Referential Memory Task

Prior to the VPT, participants completed a modified version of the Reading the Mind in the Eyes Test (RMET) (Baron-Cohen, Wheelwright, Hill, Raste, & Plumb, 2001), data published elsewhere (Martin, Huang, et al., 2017; Martin, Su, & Meinzer, 2018). The RMET requires participants to select one word from four multiple-choice options to describe the emotion/ mental state that best describes the expression from the eye region of the face. The control condition required selecting the age and sex of the eyes. Following this they were asked how often they thought or felt that way (self-encoded) or how often they thought Barack Obama would feel or think that way (other-encoded). To ensure participants were familiar with

Barack Obama, participants viewed a 5-minute documentary on his life prior to testing. To encourage engagement in the task, participants were told that their scores would be compared against those who had worked alongside Barack Obama.

Following the completion of the VPT tasks, participants performed a recognition memory task for the mental attribution words from the RMET. The options included 38 correct RMET words, 38 incorrect distractor words from RMET and 38 novel unseen words. Participants were presented with the word and asked if they had seen it in the eyes. They could respond in a confident manner (definitely did/ did not) or in a less confident manner (probably did/ did not). Scoring was 2 for correct confident response through to -2 for an incorrect confident response.

Source Memory Task

If participants identified that they had seen the mental attribution in the eyes, they were then asked "was it on a male or female face?" They could respond in a confident manner (definitely male/female) or less confident (probably male/female). Scoring was identical to the SRE task above.

A schematic description of all tasks and stimulation procedures is presented in a previous study (Martin, Dzafic, et al., 2017).

Self-Construal Style

The SEA participants also completed a self-construal scale (Vignoles et al., 2016) to measure self-reported interdependence or independence as to how the self is perceived in relation to others. The 22-item self-construal scale can be decomposed into 7 dimensions; Self-reliance vs Dependence on others (SRvDO), Connection to others vs Self-containment (COvSC), Difference vs Similarity (DvS), Self-interest vs Commitment to others (SIvCO), Consistency vs Variability (CvV), Receptiveness to influence vs Self-direction (RIvSD), Self-expression vs Harmony (SEvH). Participants responded by indicating their agreement or disagreement on a 9-point scale ranging from 1 (not at all) to 9 (exactly). Scores were reversed where necessary so that higher scores reflected greater independent and lower scores greater interdependent self-construal style. Self-construal scores were then correlated with stimulation effects across all self-other tasks. This was predominantly of interest for the SRE in episodic memory, in line with previous research showing self-construal was associated with differences in underlying social brain regions during self-referential tasks (Chen et al., 2015; Chiao et al., 2009).

Adverse Effects and Blinding

Following each session participants were asked if they experienced any adverse effects (Alam, Truong, Khadka, & Bikson, 2016) and their mood was assessed prior to and after each stimulation session using the Visual Analogue of Mood Scales (VAMS) (Folstein & Luria, 1973). Participants also stated which session they thought was active stimulation to assess whether blinding was effectively achieved.

Current Modelling

Current modelling was conducted for both the dmPFC and rTPJ stimulation sites and is presented in previous manuscripts (Martin, Huang, et al., 2017, 2018). Briefly, peak current field strengths (0.36 V/m) were identified at the dmPFC [MNI: 0 54 33] and rTPJ (0.59 V/m) [MNI: 60 -54 13]. Focal current delivery to the dmPFC and rTPJ was demonstrated with physiologically effective current strengths and also compares favourably to previous current modelling studies (see (Martin, Huang, et al., 2018) for further details.

Statistical Analyses

All analyses were completed using Bayesian statistics in JASP 0.8.6. We used the Bayes Factor (BF) to quantify evidence for the null or an alternate model. The BF_{10} refers to the likelihood of the data for a particular model. For example, a $BF_{10} = 8$ equates to data that is 8 times more likely given the alternate model than the null model. Bayes Factors should be interpreted in a linear fashion, with larger BF_{10} providing greater evidence for the alternate mode, but some thresholds have been proposed for ease of interpretation. BF_{10} 1-3 is support for the alternate model but should be considered preliminary; BF_{10} 3-10 should be considered moderate evidence, and any $BF_{10} > 10$ considered strong evidence. The inverse is true for the null model with BF_{10} 0.3-1 providing preliminary evidence, BF_{10} 0.1-0.3 moderate, and $BF_{10} < 0.1$ strong evidence. Although not a consistent match in all cases, preliminary evidence usually translates to frequentist p-values between 0.01-0.05, moderate evidence 0.005-0.01, and strong evidence to <0.005 (Benjamin et al., 2018). Default priors were used across all analyses as recommended (Wagenmakers et al., 2018).

Repeated measures analysis of variance (RM-ANOVA) were computed for congruency effect with stimulation type and perspective as within participant factors and cultural group and stimulation site as between participant factors.

RESULTS

Performance on all tasks are presented in Table 1.

Table 1. Performance on the Visual Perspective Taking and Episodic and Source Memory tasks across stimulation site, cultural group, and stimulation type. Response times refer to the difference between incongruent and congruent trials in milliseconds (msecs).

	dmPFC				rTPJ			
	South-East Asians		Caucasian Australians		South-East Asians		Caucasian Australians	
	Sham Mean (sd)	Anodal Mean (sd)	Sham Mean (sd)	Anodal Mean (sd)	Sham Mean (sd)	Anodal Mean (sd)	Sham Mean (sd)	Anodal Mean (sd)
Level two VPT								
Ego CE RT (msecs)	150.90 (193.81)	162.09 (143.93)	120.58 (139.41)	195.88 (134.74)	133.52 (229.12)	174.15 (186.32)	138.76 (147.85)	131.12 (190.67)
Allo CE RT (msecs)	220.48 (229.43)	247.71 (169.89)	249.81 (141.56)	223. 16 (163.67)	255.64 (212.05)	187.61 (179.21)	244.31 (157.87)	108.25 (167.26)
Level one VPT								
Ego CE RT (msecs)	159.75 (111.70)	186.56 (163.94)	74.31 (79.09)	122.75 (116.05)	147.17 (154.40)	168.39 (141.55)	153.72 (136.35)	130.87 (128.65)
Allo CE RT (msecs)	185.24 (157.54)	236.76 (142.75)	184.35 (100.88)	149.38 (145.32)	276.39 (151.17)	217.56 (198.83)	208.32 (106.50)	184.13 (119.40)
Implicit VPT								
Avatar CE RT (msecs)	14.90 (22.22)	14.47 (18.92)	16.29 (18.98)	12.48 (24.33)	10.11 (29.68)	16.95 (22.71)	8.03 (22.72)	9.97 (25.05)
Light CE RT (msecs)	-4.05 (22.86)	-9.58 (26.86)	-10.38 (20.30)	-12.42 (19.85)	2.95 (25.27)	-5.28 (23.96)	-5.77 (17.82)	-11.74 (20.43)
Episodic Memory								
Self-Encoded	1.03 (0.42)	0.50 (0.90)	0.89 (0.53)	0.76 (0.58)	0.46 (0.65)	0.54 (0.67)	0.64 (0.67)	0.65 (0.66)
Other-Encoded	0.66 (0.60)	0.58 (0.61)	0.58 (0.68)	0.72 (0.59)	0.46 (0.65)	0.63 (0.64)	0.64 (0.71)	0.50 (0.72)
Source Memory								
Self-Encoded	0.62 (0.42)	0.50 (0.50)	0.60 (0.33)	0.64 (0.43)	0.51 (0.54)	0.50 (0.51)	0.61 (0.46)	0.54 (0.43)
Other-Encoded	0.48 (0.49)	0.51 (0.45)	0.68 (0.48)	0.66 (0.35)	0.48 (0.52)	0.67 (0.50)	0.57 (0.44)	0.68 (0.44)

VPT= Visual Perspective Taking Task; dmPFC= dorsomedial prefrontal cortex; rTPJ= right temporoparietal junction; sd= standard deviation; CE= congruency effect; msecs= milliseconds; Ego= Egocentric; Allo= Allocentric.

Visual Perspective Taking (VPT)

Level one VPT

No support for an interaction between perspective and stimulation effect was identified for level one VPT, BF_{10}=0.400, η_p^2 = 0.03. However, the congruency effect was different between cultural groups, with the SEA being influenced to a greater extent by the alternate perspective across both egocentric and allocentric conditions combined, BF_{10} = 2.578, η_p^2 = 0.20 (see Figure 1A). Evidence for an interaction between cultural group x stimulation site x stimulation type x agent was identified, BF_{10} = 1.597, η_p^2 = 0.05. Therefore, each cultural group was analyzed independently. Previously, we identified preliminary evidence for a site-specific effect of dmPFC stimulation (stim site x stim type interaction BF_{10} = 1.723) on increasing the congruency effect during egocentric condition only, BF_{10} = 1.012, δ= 0.45 (see Martin, Huang, et al., 2018). In the SEA group we did not identify an interaction between stim site x stim type, BF_{10} = 0.611, η_p^2 = 0.04 nor did we identify an overall effect of stimulation on congruency effect, BF_{10} = 0.174, η_p^2 = 0.01. Therefore, anodal stimulation to either the dmPFC or the rTPJ had no effect in the SEA group. On the contrary, anodal stimulation to the dmPFC shifted the

performance of the CA group closer to that of the SEA during the egocentric condition (see Figure 1B).

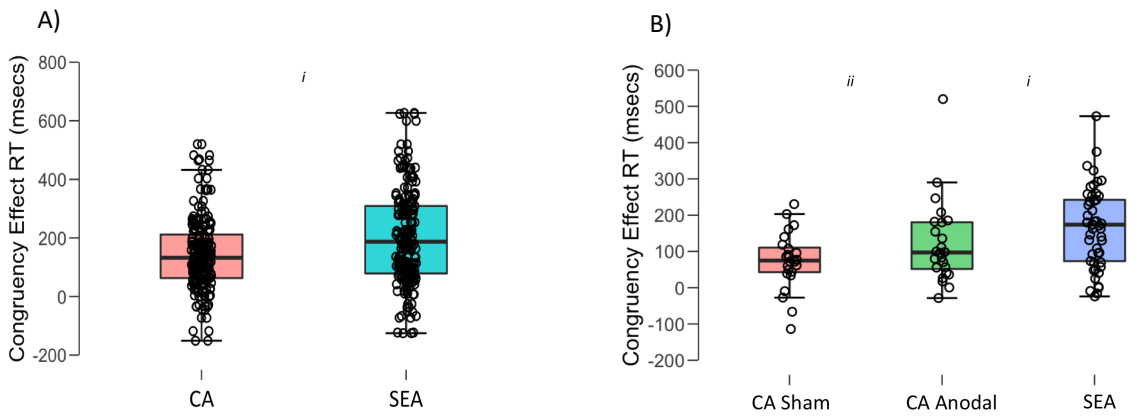

Figure 1. A) Level one VPT (pooled across both sham and anodal sessions). South-East Asian (SEA) participants had a greater congruency effect than Caucasian Australians (CA) demonstrating that they were more influenced by the perspective other than the one currently required for task demands, $BF_{10} = 2.578$ (i). B) During the egocentric condition of the VPT level one task, SEA showed a greater interference effect due to the allocentric perspective (*i)*. In the CA group, anodal stimulation to the dmPFC shifted performance closer to the SEA group, $BF_{10} = 1.012$, such that the allocentric perspective affected egocentric performance to a greater extent. The boxplot displays the median and the interquartile range (IQR). The whiskers extend to the most extreme datapoint within ±1.5*IQR.

Level two VPT

Egocentric and allocentric conditions were analysed separately as evidence for an interaction was identified between perspective (egocentric/allocentric) x stimulation effect for level two VPT, $BF_{10}= 2.688$, $\eta_p^2 = 0.07$.

Egocentric

There was no evidence for an effect of cultural group on the congruency effect on RT, $BF_{10} = 0.200$, $\eta_p^2 = 0.001$. Stimulation had no overall effect, $BF_{10} = 0.358$, $\eta_p^2 = 0.02$, nor a site-specific effect, $BF_{10} = 0.266$, $\eta_p^2 = 0.01$. Cultural group had no effect on stimulation response, $BF_{10} = 0.212$, $\eta_p^2 = 0.001$ nor on the site-specific effect, $BF_{10} = 0.429$, $\eta_p^2 = 0.01$.

Allocentric

Cultural group had no effect on the congruency effect on RT, $BF_{10} = 0.238$, $\eta_p^2 = 0.01$, demonstrating no baseline differences between cultural groups on level two VPT. In the combined sample, a site-specific effect of stimulation was identified, $BF_{10} = 2.752$, $\eta_p^2 = 0.05$. Therefore, each stimulation site was analyzed separately. Following rTPJ stimulation, congruency effect was reduced, $BF_{10} = 20.499$, $\eta_p^2 = 0.18$. Cultural group had no effect on rTPJ stimulation, $BF_{10} = 0.472$, $\eta_p^2 = 0.02$. No effect of dmPFC stimulation was identified, $BF_{10} =0.230$, $\eta_p^2 = 0.002$ and cultural group had no interaction on the stimulation effect, $BF_{10} =$

0.516, η_p^2 = 0.03. In summary, both cultural groups had comparable baseline performance and subsequent stimulation effects (see Figure 2).

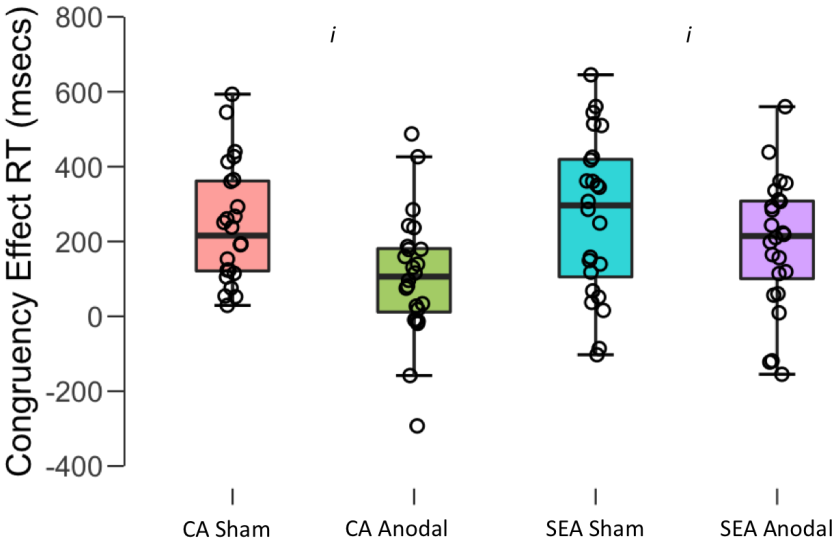

Figure 2. Level two VPT. Anodal stimulation to the right TPJ reduced the congruency effect due to interference from the egocentric perspective during the allocentric condition of the level two VPT, BF_{10} = 20.5. This was consistent across both cultural groups. The boxplot displays the median and the IQR. The whiskers extend to the most extreme datapoint within ±1.5*IQR. CA= Caucasian Australian; SEA= South-East Asian

Implicit VPT

Agent type influenced the congruency effect on RT, BF_{10} = 2.413e+17, η_p^2 = 0.50, demonstrating that participants were slower when the scene was incongruent with the avatar but not the traffic light. Therefore, an implicit VPT effect was identified in the combined sample. The effect was consistent across cultural groups, BF_{10} = 0.252, η_p^2 = 0.01. Stimulation had no overall effect on implicit VPT, BF_{10} = 0.159, η_p^2 = 0.02, nor a site-specific effect, BF_{10} = 0.274, η_p^2 = 0.01. Cultural group had no effect on stimulation response, BF_{10} =0.208, η_p^2 = 0.01 nor on site-specific effect, BF_{10} = 0.417, η_p^2 = 0.000.

Self-Reference Effect on Episodic Memory

A SRE was identified for episodic memory, BF_{10} = 7.973, η_p^2 = 0.04 whereby self-encoded words were better remembered than other-encoded words. The SRE was comparable between the two cultural groups, BF_{10} = 0.219, η_p^2 = 0.001 showing comparable baseline performance. A site-specific stimulation effect was identified across the combined cohort, BF_{10} = 1.288, η_p^2 = 0.03 and cultural group interacted with site-specific stimulation effects, BF_{10} = 6.811, η_p^2 = 0.06. As a significant interaction was identified, each stimulation site was analyzed separately. The SRE in memory was removed after dmPFC stimulation, BF_{10} = 6.992, η_p^2 = 0.22 and cultural group had no effect on stimulation effects, BF_{10} = 0.343, η_p^2 = 0.02.

However, In addition, a stimulation x cultural group effect on overall memory score was identified, $BF_{10} = 2.805$, $\eta_p^2 = 0.08$ such that dmPFC stimulation reduced overall memory in the SEA group, $BF_{10} = 10.431$, $\eta_p^2 = 0.24$, but not in CA, $BF_{10} = 0.209$, $\eta_p^2 = 0.000$ (see Figure 3). In the combined cohort, rTPJ stimulation had no effect on overall memory, $BF_{10} = 0.171$, $\eta_p^2 = 0.01$, nor the SRE, $BF_{10} = 0.209$, $\eta_p^2 = 0.001$, and no interaction was identified between cultural group and overall stimulation effect, $BF_{10} = 0.610$, $\eta_p^2 = 0.04$, nor the stimulation effect on the SRE, $BF_{10} = 0.404$, $\eta_p^2 = 0.03$.

Therefore, baseline performance on the SRE memory task was identical between the groups with comparable effects of dmPFC stimulation in removing the SRE. An additional effect was identified in the SEA group, whereby dmPFC stimulation reduced overall memory as well as removing the SRE. Stimulation of the rTPJ had no effects on SRE.

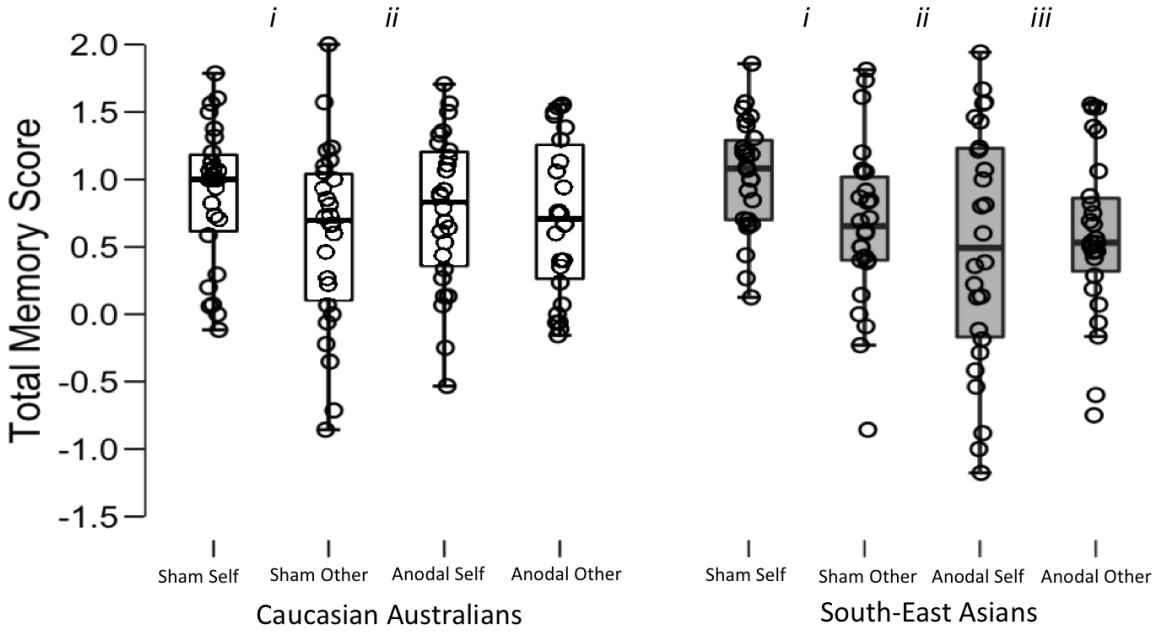

Figure 3. Self-reference effect (SRE) in episodic memory. *i)* A SRE was identified at baseline (sham-tDCS) with total memory score higher for self-encoded than other-encoded words in both groups, $BF_{10} = 7.973$; *ii)* After anodal stimulation to the dmPFC, the SRE was removed in both groups, $BF_{10} = 6.992$; *iii)* An additional reduction in overall (self & other) total memory score was identified in the SEA group only, $BF_{10} = 10.431$. The boxplot displays the median and the IQR. The whiskers extend to the most extreme datapoint within $\pm$1.5*IQR.

Self-Reference Effect on Source Memory

No difference was identified between self and other encoding on source memories in the combined sample, $BF_{10} = 0.128$, $\eta_p^2 = 0.003$ and there was no interaction with cultural group, $BF_{10} = 0.228$, $\eta_p^2 = 0.002$. No overall effect of stimulation, $BF_{10} = 0.447$, $\eta_p^2 = 0.002$, nor an interaction with stimulation site, $BF_{10} = 0.308$, $\eta_p^2 = 0.01$, was identified in the combined group. Cultural group did not influence overall stimulation effect, $BF_{10} = 0.263$, $\eta_p^2 = 0.000$ nor the site-specific interaction, $BF_{10} = 0.277$, $\eta_p^2 = 0.01$.

Therefore, stimulation effects were only observed during the memory task with specific demands on self-referential encoding and not for the source memory component that did not explicitly rely on self-other encoding.

Association with Self-Construal Style

The exploratory analysis to identify whether stimulation effects differed by self-construal style in the SEA participants identified moderate evidence for a relationship between anodal HD-tDCS to the dmPFC induced reduction of the SRE and two dimensions of the self-construal scale; Self-Containment vs Connection to Others, r= 0.489, BF_{10}= 9.678 and Self-direction vs Receptiveness to influence, r=0.457, BF_{10}=6.763. Those who reported a greater interdependent self-construal style on these two dimensions, had greater reduction of the SRE after HD-tDCS to the dmPFC (see Figure 4). Evidence for the null model was identified for all stimulation effects on VPT measures (BF_{10} between 0.198-0.470).

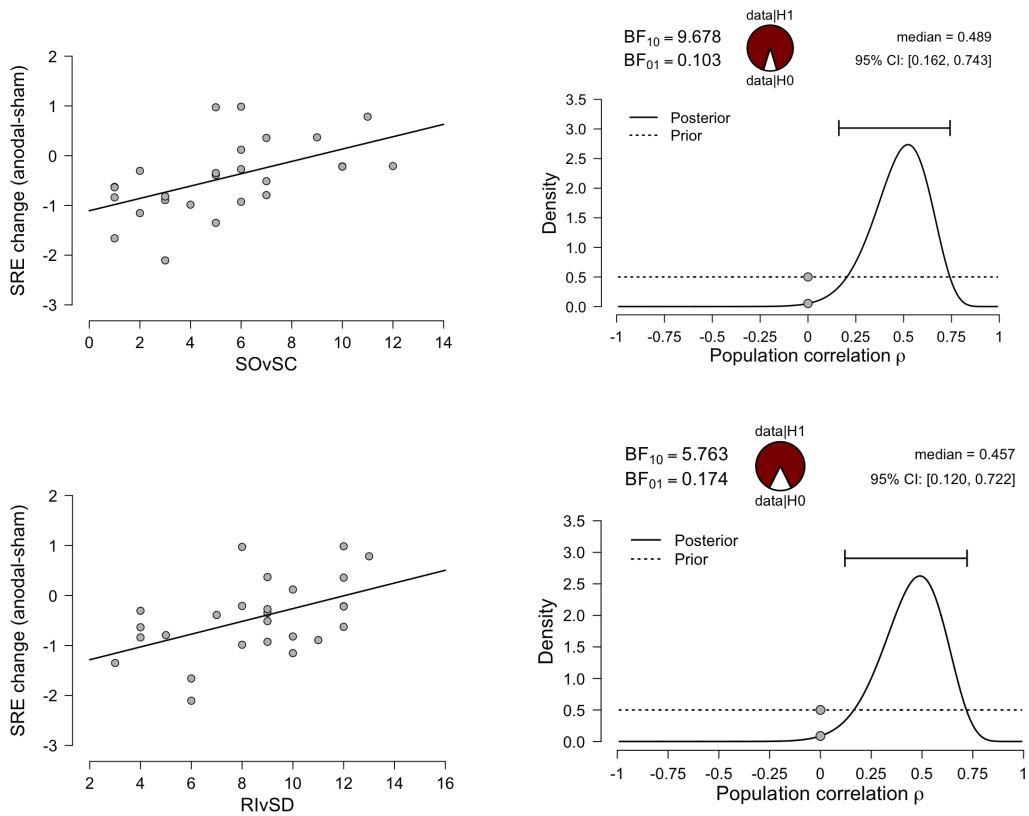

Figure 4. The effect of anodal stimulation of the dmPFC on the SRE correlated with self-construal style in the South-East Asian group. On both scales, lower scores represent a greater interdependent self-construal. Those who reported greater interdependence in the dimensions of Self-Containment vs Connection to Others (SCvCO) and Self-Direction vs Receptiveness to Influence (SDvRI) had the greatest reduction in SRE after anodal stimulation of the dmPFC. Prior and posterior distributions, the median effect size and a 95% credible interval are provided. The pie charts provide a visual representation of the evidence for the null or alternate model.

Adverse Effects, Mood Change, and Blinding

Adverse effects and mood change are detailed in Table S1. Stimulation type had no effect on positive mood change, BF_{10}= 0.20, and there was no interaction with stimulation site, BF_{10}= 0.22, and there was no further interaction with cultural group, BF_{10}= 0.29. Likewise, there was no effect on negative mood change, BF_{10}= 0.56, no interaction with stimulation site, BF_{10}= 0.21, and no further interaction with cultural group, BF_{10}= 0.81.

Anodal stimulation resulted in more pronounced, albeit mild, adverse effects compared with sham, BF_{10}= 3.28. However, this did not differ by stimulation site, BF_{10}= 0.294 nor did it differ by cultural group, BF_{10}= 0.25, and there was no further interaction with cultural group, BF_{10}= 0.49.

Participants were unable to predict which session was the active condition (59/104 correct guesses), BF_{10}= 0.247. This did not differ by cultural group (30/52 & 29;52 correct guesses), BF_{10}= 0.243.

Baseline Testing

Baseline cognitive performance is presented in Table S2. Cognitive differences were identified between the SEA and CA groups in two-back working memory, BF_{10}= 1.52, phonemic fluency, BF_{10}= 1.58, and Stroop Effect, BF_{10}= 1.31. The SEA group also scored higher on the ASQ, BF_{10}= 19.05. Those in the rTPJ study performed worse on a set-switching test, BF_{10}= 3.92. However, none of these influenced the results, were dropped from the analyses, and are not discussed further.

DISCUSSION

In the present study, we provide the first evidence that HD-tDCS has different cognitive effects in groups from different cultural backgrounds. As cultural background shapes the neural substrates supporting social cognition, the results provide further evidence that baseline differences in cognition are important mediators of brain stimulation effects. We also demonstrate that HD-tDCS has a role in furthering our understanding of cultural differences in brain-behaviour relationships. Finally, while we demonstrate unique effects in two different cultural groups based on existing baseline cognitive status, we also provide evidence for replicable effects of HD-tDCS to the social brain when these differences are absent.

One of the main findings of the present study was that when baseline performance between the two cultural groups was comparable, stimulation effects were subsequently comparable. On the other hand, when baseline performance differed, stimulation effects differed. This provides evidence for replicable effects of HD-tDCS on social brain functioning and a further consideration for minimising heterogeneity of tDCS response. Both cultural groups were comparable at baseline when taking the allocentric perspective during the level two VPT task and rTPJ excitation reduced the egocentric interference in both groups. Likewise, both groups had a comparable SRE for episodic memory and dmPFC excitation removed this bias. Unique effects were identified at baseline for the level one VPT task with the SEA more influenced by

the alternate perspective compared to the CA group. Excitation of the dmPFC shifted the performance of CA closer to that of the SEA by increasing the interference from the allocentric judgement during egocentric judgements. However, stimulation had no effect on the performance of SEA. Excitation of the dmPFC also had a unique effect in the SEA cohort of reducing overall memory performance. The results of the current study provide evidence for replicable and dissociable effects of HD-tDCS to regions within the social brain on self-other processing and provides further evidence that baseline performance is an important consideration for subsequent tDCS effects. Previous studies have highlighted differential tDCS effects on the social brain based on sex (Martin, Huang, et al., 2017), but this is the first study to provide evidence that cultural background may also be a necessary consideration. Although this effect may be limited to social cognition where culture is a recognised source of variance, performance on other cognitive domains has been shown to be culturally specific (Nisbett & Miyamoto, 2005) and should be considered in future brain stimulation studies.

We identified both replicable and unique effects of HD-tDCS to the social brain on self-other processing in cohorts from two cultural backgrounds. With the current focus on improving the replication of results in psychology (Open Science, 2015), the replicable effects of social brain stimulation provide strong evidence for regional and task specific roles of the dmPFC and rTPJ in self other processing. Also, replicated robust effects of HD-tDCS helps dispel claims regarding the effectiveness of tDCS to have any meaningful effect on cognition (Horvath, Forte, & Carter, 2015). Replicating effects in different cohorts from different cultural backgrounds goes some way to address issues concerning homogeneity of conclusions based on limited participant sampling from predominantly Western backgrounds (Henrich, Heine, & Norenzayan, 2010). Moreover, the field of cultural neuroscience has emerged out of a greater need to incorporate different cultural backgrounds into understanding how brain development is shaped by the complex interplay between biology and socialisation through different societal lenses (Park & Huang, 2010).

Previously it has been shown that people from East Asian cultural backgrounds are more integrative in their approach to level one VPT tasks, as indexed by a greater influence of alternate perspectives during egocentric perspective taking (Kessler et al., 2014; Wu & Keysar, 2007). We provide further support for this cultural difference in the current study. As dmPFC anodal stimulation increased the influence of allocentric information on egocentric judgements in CA only, it suggests that either the dmPFC is more active in the SEA such that stimulation has no differential physiological effect or that underlying brain-behaviour associations are different between the two groups. The fact that stimulation shifts performance in the CA towards the SEA provides evidence for the former and that it may be that CA recruit the dmPFC to a lesser extent during these types of tasks. As the dmPFC is consistently associated with tasks requiring integration of social information (Brosch, Schiller, Mojdehbakhsh, Uleman, & Phelps, 2013; Ferrari et al., 2016; Wittmann et al., 2016), CA may adopt strategies that are less reliant on integration of information and therefore less reliant on dmPFC recruitment, consistent with previous research showing that Westerners are less relational and more rigid in their sense of self regardless of the situational demands (in this case to understand other perspectives).

Although SRE was removed after dmPFC excitation, replicating the effects seen in CA participants, anodal HD-tDCS to the dmPFC had an additional effect of reducing overall

memory in the SEA cohort. Although the mPFC shows a self-other gradient from ventral to dorsal regions , there is evidence that this is less demarcated in people from East Asian cultural backgrounds (Harada et al., 2010) coupled with less mPFC activity associated with self-referential processing (Ma, Bang, et al., 2014). As dmPFC is associated with a wide range of memory processes (Euston, Gruber, & McNaughton, 2012), differences in underlying neural brain-behaviour association may result in the differences in stimulation response. As functional connectivity patterns with the dmPFC are also culturally specific (Li et al., 2018), connectivity differences between the cultural groups may also be relevant for the culturally specific results and should be considered in future research using concurrent tDCS and fMRI (Gbadeyan et al., 2016).

The exploratory analyses correlating stimulation response with self-construal provide a cautionary note that culture is not a binary construct. Independent and interdependent self-construal exists on a continuum and variation exists both between and within cultures (Vignoles et al., 2016). Although not assessed in the present study, similar variation will exist in Western cohorts and requires examination in future studies. Heterogeneity in stimulation response provides both an opportunity for the scientific method of explaining individual differences and a challenge for clinical applications that aspire to show consistent effects of brain stimulation that are as widely applicable as possible. However, further knowledge concerning mediating factors that may improve stimulation response will ultimately improve the application in both experimental and clinical contexts. This is of particular relevance for future studies in clinical cohorts with social cognitive impairments such as psychosis and autism. Future research is necessary to extend this research to other cultural groups. It also should be explored if culture mediates stimulation response in other cognitive domains. Likewise, concurrent tDCS-fMRI will improve our understanding of the basic neurophysiological effects of HD-tDCS and how it affects underlying neural tissue.

In sum, this is the first study to demonstrate replicable effects of HD-tDCS to the social brain as well as culturally mediated unique differences in social brain stimulation response. The replicated effects provide robust evidence that HD-tDCS can influence social cognition and provide a further tool for investigating cultural differences in the underlying social brain and its relationship to self-construal.

Contributions

AM and MM conceived of the study. AM designed the study. Testing and data collection were performed by AM and PS. AM performed the data analysis. AM drafted the manuscript and MM and PS provided critical revisions. All authors approved the final manuscript for submission.

Acknowledgements

We would like to acknowledge Dr Ilvana Dzafic for assistance with coding the tasks and Jasmine Huang for data collection. The study was supported through a Future Fellowship [FT120100608] and a strategic seed-funding grant from the University of Queensland, awarded to Marcus Meinzer.

Open Practices Statement

The experiments were not preregistered. Neither the data nor the materials have been made available on a permanent third-party archive; requests for the data or materials can be sent via email to the lead author at a.martin11@uq.edu.au

REFERENCES

Alam, M., Truong, D. Q., Khadka, N., & Bikson, M. (2016). Spatial and polarity precision of concentric high-definition transcranial direct current stimulation (HD-tDCS). *Phys Med Biol, 61*(12), 4506-4521. doi:10.1088/0031-9155/61/12/4506

Apperly, I. A., & Butterfill, S. A. (2009). Do humans have two systems to track beliefs and belief-like states? *Psychol Rev, 116*(4), 953-970. doi:10.1037/a0016923

Baron-Cohen, S., Wheelwright, S., Hill, J., Raste, Y., & Plumb, I. (2001). The "Reading the Mind in the Eyes" Test revised version: a study with normal adults, and adults with Asperger syndrome or high-functioning autism. *J Child Psychol Psychiatry, 42*(2), 241-251.

Baron-Cohen, S., Wheelwright, S., Skinner, R., Martin, J., & Clubley, E. (2001). The autism-spectrum quotient (AQ): evidence from Asperger syndrome/high-functioning autism, males and females, scientists and mathematicians. *J Autism Dev Disord, 31*(1), 5-17.

Benjamin, D. J., Berger, J. O., Johannesson, M., Nosek, B. A., Wagenmakers, E. J., Berk, R., . . . Johnson, V. E. (2018). Redefine statistical significance. *Nature Human Behaviour, 2*(1), 6-10. doi:10.1038/s41562-017-0189-z

Brosch, T., Schiller, D., Mojdehbakhsh, R., Uleman, J. S., & Phelps, E. A. (2013). Neural mechanisms underlying the integration of situational information into attribution outcomes. *Soc Cogn Affect Neurosci, 8*(6), 640-646. doi:10.1093/scan/nst019

Chen, P. A., Wagner, D. D., Kelley, W. M., & Heatherton, T. F. (2015). Activity in Cortical Midline Structures Is Modulated by Self-Construal Changes during Acculturation. *Cult Brain, 3*(1), 39-52. doi:10.1007/s40167-015-0026-z

Chiao, J. Y., Harada, T., Komeda, H., Li, Z., Mano, Y., Saito, D., . . . Iidaka, T. (2009). Neural basis of individualistic and collectivistic views of self. *Hum Brain Mapp, 30*(9), 2813-2820. doi:10.1002/hbm.20707

Colzato, L. S., de Bruijn, E. R., & Hommel, B. (2012). Up to "me" or up to "us"? The impact of self-construal priming on cognitive self-other integration. *Front Psychol, 3*, 341. doi:10.3389/fpsyg.2012.00341

Euston, D. R., Gruber, A. J., & McNaughton, B. L. (2012). The role of medial prefrontal cortex in memory and decision making. *Neuron, 76*(6), 1057-1070. doi:10.1016/j.neuron.2012.12.002

Ferrari, C., Lega, C., Vernice, M., Tamietto, M., Mende-Siedlecki, P., Vecchi, T., . . . Cattaneo, Z. (2016). The Dorsomedial Prefrontal Cortex Plays a Causal Role in Integrating Social Impressions from Faces and Verbal Descriptions. *Cereb Cortex, 26*(1), 156-165. doi:10.1093/cercor/bhu186

Folstein, M. F., & Luria, R. (1973). Reliability, validity, and clinical application of the Visual Analogue Mood Scale. *Psychol Med, 3*(4), 479-486.

Gbadeyan, O., Steinhauser, M., McMahon, K., & Meinzer, M. (2016). Safety, Tolerability, Blinding Efficacy and Behavioural Effects of a Novel MRI-Compatible, High-Definition tDCS Set-Up. *Brain Stimul, 9*(4), 545-552. doi:10.1016/j.brs.2016.03.018

Han, S., Northoff, G., Vogeley, K., Wexler, B. E., Kitayama, S., & Varnum, M. E. (2013). A cultural neuroscience approach to the biosocial nature of the human brain. *Annu Rev Psychol, 64*, 335-359. doi:10.1146/annurev-psych-071112-054629

Harada, T., Li, Z., & Chiao, J. Y. (2010). Differential dorsal and ventral medial prefrontal representations of the implicit self modulated by individualism and collectivism: An fMRI study. *Soc Neurosci, 5*(3), 257-271. doi:10.1080/17470910903374895

Heine, S. J. (2001). Self as cultural product: an examination of East Asian and North American selves. *J Pers, 69*(6), 881-906.

Henrich, J., Heine, S. J., & Norenzayan, A. (2010). The weirdest people in the world? *Behav Brain Sci, 33*(2-3), 61-83; discussion 83-135. doi:10.1017/S0140525X0999152X

Horvath, J. C., Forte, J. D., & Carter, O. (2015). Evidence that transcranial direct current stimulation (tDCS) generates little-to-no reliable neurophysiologic effect beyond MEP amplitude modulation in healthy human subjects: A systematic review. *Neuropsychologia, 66*, 213-236. doi:10.1016/j.neuropsychologia.2014.11.021

Kessler, K., Cao, L., O'Shea, K. J., & Wang, H. (2014). A cross-culture, cross-gender comparison of perspective taking mechanisms. *Proc Biol Sci, 281*(1785), 20140388. doi:10.1098/rspb.2014.0388

Kühnen, U. (2009). *Culture, Self-construal and Social cognition: Evidence from Cross-Cultural and Priming Studies* Athens, Greece: Athens: Atrapos Editions.

Li, L. M. W., Luo, S., Ma, J., Lin, Y., Fan, L., Zhong, S., . . . Wu, X. (2018). Functional connectivity pattern underlies individual differences in independent self-construal. *Soc Cogn Affect Neurosci, 13*(3), 269-280. doi:10.1093/scan/nsy008

Liu, Y., Wu, B., Petti, C., Wu, X., & Han, S. (2018). Self-construals moderate associations between trait creativity and social brain network. *Neuropsychologia, 111*, 284-291. doi:10.1016/j.neuropsychologia.2018.02.012

Ma, Y., Bang, D., Wang, C., Allen, M., Frith, C., Roepstorff, A., & Han, S. (2014). Sociocultural patterning of neural activity during self-reflection. *Soc Cogn Affect Neurosci, 9*(1), 73-80. doi:10.1093/scan/nss103

Ma, Y., Wang, C., Li, B., Zhang, W., Rao, Y., & Han, S. (2014). Does self-construal predict activity in the social brain network? A genetic moderation effect. *Soc Cogn Affect Neurosci, 9*(9), 1360-1367. doi:10.1093/scan/nst125

Markus, H. R., & Kitayama, S. (1991). Culture and the self: Implications for cognition, emotion, and motivation. *Psychological Review, 98*, 224-253.

Martin, A. K., Dzafic, I., Ramdave, S., & Meinzer, M. (2017). Causal evidence for task-specific involvement of the dorsomedial prefrontal cortex in human social cognition. *Soc Cogn Affect Neurosci*. doi:10.1093/scan/nsx063

Martin, A. K., Huang, J., Hunold, A., & Meinzer, M. (2017). Sex Mediates the Effects of High-Definition Transcranial Direct Current Stimulation on "Mind-Reading". *Neuroscience, 366*, 84-94. doi:10.1016/j.neuroscience.2017.10.005

Martin, A. K., Huang, J., Hunold, A., & Meinzer, M. (2018). Dissociable roles within the social brain for self other processing: a HD-tDCS study. *Cereb Cortex, in press*.

Martin, A. K., Perceval, G., Davies, I., Su, P., Huang, J., & Meinzer, M. (2018). Visual Perspective Taking in Young and Older Adults. *Psyarxiv*.

Martin, A. K., Su, P., & Meinzer, M. (2018). Non-invasive brain stimulation improves cross-cultural "mind-reading". *bioRxiv*.

Nisbett, R. E., & Miyamoto, Y. (2005). The influence of culture: holistic versus analytic perception. *Trends Cogn Sci, 9*(10), 467-473. doi:10.1016/j.tics.2005.08.004

Open Science, C. (2015). PSYCHOLOGY. Estimating the reproducibility of psychological science. *Science, 349*(6251), aac4716. doi:10.1126/science.aac4716

Park, D. C., & Huang, C. M. (2010). Culture Wires the Brain: A Cognitive Neuroscience Perspective. *Perspect Psychol Sci, 5*(4), 391-400. doi:10.1177/1745691610374591

Santiesteban, I., Banissy, M. J., Catmur, C., & Bird, G. (2012). Enhancing social ability by stimulating right temporoparietal junction. *Curr Biol, 22*(23), 2274-2277. doi:10.1016/j.cub.2012.10.018

Santiesteban, I., Catmur, C., Hopkins, S. C., Bird, G., & Heyes, C. (2014). Avatars and arrows: implicit mentalizing or domain-general processing? *J Exp Psychol Hum Percept Perform, 40*(3), 929-937. doi:10.1037/a0035175

Sparks, S., Cunningham, S. J., & Kritikos, A. (2016). Culture modulates implicit ownership-induced self-bias in memory. *Cognition, 153*, 89-98. doi:10.1016/j.cognition.2016.05.003

Symons, C. S., & Johnson, B. T. (1997). The self-reference effect in memory: a meta-analysis. *Psychol Bull, 121*(3), 371-394.

Vignoles, V. L., Owe, E., Becker, M., Smith, P. B., Easterbrook, M. J., Brown, R., . . . Bond, M. H. (2016). Beyond the 'east-west' dichotomy: Global variation in cultural models of selfhood. *J Exp Psychol Gen, 145*(8), 966-1000. doi:10.1037/xge0000175

Wagenmakers, E. J., Marsman, M., Jamil, T., Ly, A., Verhagen, J., Love, J., . . . Morey, R. D. (2018). Bayesian inference for psychology . Part 1: Theoretical advantages and practical ramifications. *Psychon Bull Rev, 25*(1), 35-57. doi:10.3758/s13423-017-1343-3

Wittmann, M. K., Kolling, N., Faber, N. S., Scholl, J., Nelissen, N., & Rushworth, M. F. (2016). Self-Other Mergence in the Frontal Cortex during Cooperation and Competition. *Neuron, 91*(2), 482-493. doi:10.1016/j.neuron.2016.06.022

Wu, S., & Keysar, B. (2007). The effect of culture on perspective taking. *Psychol Sci, 18*(7), 600-606. doi:10.1111/j.1467-9280.2007.01946.x

Zigmond, A. S., & Snaith, R. P. (1983). The hospital anxiety and depression scale. *Acta Psychiatr Scand, 67*(6), 361-370.