bioRxiv preprint doi: https://doi.org/10.1101/603597; this version posted September 6, 2019. The copyright holder for this preprint (which was not certified by peer review) is the author/funder, who has granted bioRxiv a license to display the preprint in perpetuity. It is made available under aCC-BY-NC-ND 4.0 International license.

Early transmission of sensitive strain slows down emergence of drug resistance in *Plasmodium vivax*

Mario J.C. Ayala[1], Daniel A.M. Villela[1]

1 Programa de Computação Científica, Fundação Oswaldo Cruz (Fiocruz), Rio de Janeiro, Brazil

* Correspondence: daniel.villela@fiocruz.br

Abstract

The spread of drug resistance of *Plasmodium falciparum* and *Plasmodium vivax* parasites is a challenge towards malaria elimination.*P. falciparum* has shown an early and severe drug resistance in comparison to *P. vivax* in various countries. In fact, these *Plasmodium* species differ in their life cycle and treatment in various factors: development and duration of sexual parasite forms differ, symptoms severity are unequal, relapses present only in *P. vivax* cases, and the Artemisinin-based combination therapy (ACT) is only mandatory in all *P. falciparum* cases. We compared the spread of drug resistance for both species through two compartmental models using ordinary differential equations. The model structure describes how sensitive and resistant parasite strains infect a human population treated with antimalarials. We found that the early transmission before treatment and the low effectiveness of drug coverage support the prevalence of sensitive parasites delaying the emergence of resistant *P. vivax*. These results imply that earlier attention of symptomatic and reservoirs of *P. vivax* accelerates the spread of drug resistance as *P. falciparum*.

Introduction

Spread of drug resistance of *Plasmodium falciparum* and *Plasmodium vivax* parasites challenges malaria programmes towards elimination, as previous studies have confirmed the spread of drug resistance to the first-line drugs: chloroquine (CQ) and artemisinin-based combination therapies (ACTs) [1–6]. Nevertheless, resistant parasites have emerged in different geographical and temporal patterns around the endemic regions on the world [5]. Thus, efficient malaria programs require considering the variations in treatment regimens and environmental conditions.

Apart from external conditions, *P. falciparum* and *P. vivax* parasites differ in their life cycle and treatment exhibiting distinct patterns in drug resistance. *P. falciparum* has shown an early and severe drug resistance in comparison to *P. vivax*. Currently, chloroquine (CQ) remains as the first-line treatment against *P. vivax* and ACTs to *P. falciparum* due to the reports of CQ resistance in *P. falciparum* dating from 1950 [2, 3, 7]. On the other hand, these *Plasmodium* species differ in various factors: relapses only in *P. vivax* cases, development and duration of sexual parasite forms, symptoms severity and host immunity response [6, 8, 9]. Therefore, these species diverge and require specific studies in order to understand and compare determinants in their particular evolution of drug resistance.

Although most previous studies focused on *P. falciparum* resistance, a few works have compared the evolution of drug resistance between both species [5, 8, 10]. Most of previous studies evaluated *P. falciparum*-resistance factors such as cost-resistance, selection after treatment, transmission of resistant parasites, epidemiological factors, asymptomatic infections and treatment regimens [11–22]. Even though *P. vivax* caused the 74% of malaria cases in the Americas and the 37% of cases in the Asian Southwest, the impact of drug resistant in parasite prevalence still remains underestimate [23].

Our aim is to compare the emergence and spread of *P. vivax* and *P. falciparum* drug resistance taking into account their particular life cycles. Here, we developed compartmental models for both *P. vivax* and *P. falciparum* illustrating the emergence and transmission of resistant parasites under different treatment regimens and epidemiological conditions in human population level. Our approach reveals the impact in drug resistance of both species filling in the gap of knowledge about *P. vivax* resistance.

bioRxiv preprint doi: https://doi.org/10.1101/603597; this version posted September 6, 2019. The copyright holder for this preprint (which was not certified by peer review) is the author/funder, who has granted bioRxiv a license to display the preprint in perpetuity. It is made available under aCC-BY-NC-ND 4.0 International license.

Materials and methods

We developed mathematical models for both *Plasmodium vivax* and *Plasmodium falciparum* using ordinary differential equations (ODE) to represent the transmission of two strains: sensitive and resistant. These models are based on the well-known Ross-Macdonald structure that measure human and mosquito populations dividing by susceptible and infected individuals [24]. Additionally, we implemented a post-treatment state in humans and we also divided infected states by sensitive and resistant. The next subsections expand model features and differences between *P. vivax* and *P. falciparum* modeling.

P. falciparum model

This model outlines *P. falciparum* transmission in five human and three mosquito states: susceptible humans S_h, infected humans by sensitive strain I_{fs}, post-treatment humans after sensitive infection P_{fs}, infected humans by resistant strain I_{fr}, post-treatment humans after resistant infection P_{fr}, susceptible mosquitoes S_m, infected mosquitoes by sensitive strain I_{mfs}, and infected mosquitoes by resistant strain I_{mfr}. Infected and post-treatment humans can infect susceptible mosquitoes and then, they become susceptible again (see Fig 1). On the other hand, infected mosquitoes remain in this state until their death due to their the short life expectancy. The equations from Eq 1 to Eq 8 represent the measure per state; table 1 illustrates model parameters.

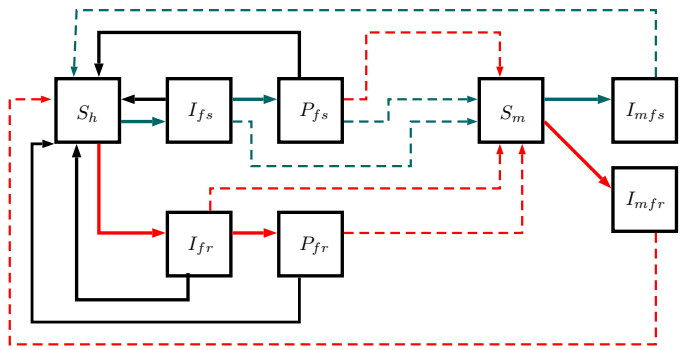

Fig 1. *P. Falciparum* model. This structure illustrates the transmission in five human and three mosquito states: susceptible humans S_h, infected humans by sensitive strain I_{fs}, post-treatment humans after sensitive infection P_{fs}, infected humans by resistant strain I_{fr}, post-treatment humans after resistant infection P_{fr}, susceptible mosquitoes S_m, infected mosquitoes by sensitive strain I_{mfs}, and infected mosquitoes by resistant strain I_{mfr}. Complete lines describe the possible progressions between states whereas dotted lines describe the parasite transmission between humans and mosquitoes. Red, gray, and black lines display the flows of resistant, sensitive, and recovered.

$$\frac{dS_h}{dt} = \Lambda_h N_h - mab\frac{I_{mfs}}{N_m}S_h - (1-\varrho)mab\frac{I_{mfr}}{N_m}S_h + \frac{P_{fs}}{\kappa} + \frac{P_{fr}}{\kappa(n+1)} \tag{1}$$

$$+(1-\eta\sigma_f)r_f I_{fs} + (1-\eta\sigma_f)r_f I_{fr} - \mu_h S_h$$

$$\frac{dI_{fs}}{dt} = mab\frac{I_{mfs}}{N_m}S_h - (1-\eta\sigma_f)r_f I_{fs} - \eta\sigma_f\gamma_f I_{fs} - \mu_h I_{fs}, \tag{2}$$

$$\frac{dP_{fs}}{dt} = \eta\sigma_f\gamma_f I_{fs} - \frac{P_{fs}}{\kappa} - \mu_h P_{fs}, \tag{3}$$

$$\frac{dI_{fr}}{dt} = (1-\varrho)mab\frac{I_{mfr}}{N_m}S_h - (1-\eta\sigma_f)r_f I_{fr} - \frac{\eta\sigma_f\gamma_f}{n+1}I_{fr} - \mu_h I_{fr}, \tag{4}$$

$$\frac{dP_{fr}}{dt} = \frac{\eta\sigma_f\gamma_f}{n+1}I_{fr} - \frac{P_{fr}}{\kappa(n+1)} - \mu_h P_{fr}, \tag{5}$$

$$\frac{dS_m}{dt} = \Lambda_m N_m - [ac_s\sigma_f + ac_a(1-\sigma_f)]\frac{I_{fs}}{N_h}S_m - ac_s\frac{\epsilon}{\kappa}(1-\varphi)(1-\nu)\frac{P_{fs}}{N_h}S_m \tag{6}$$

bioRxiv preprint doi: https://doi.org/10.1101/603597; this version posted September 6, 2019. The copyright holder for this preprint (which was not certified by peer review) is the author/funder, who has granted bioRxiv a license to display the preprint in perpetuity. It is made available under aCC-BY-NC-ND 4.0 International license.

$$-ac_s\tfrac{\epsilon}{\kappa}(1-\varrho)(1-\varphi)\nu\tfrac{P_{fs}}{N_h}S_m-[ac_s\sigma_f+ac_a(1-\sigma_f)](1-\varrho)\tfrac{I_{fr}}{N_h}S_m$$

$$-ac_s\tfrac{\epsilon}{\kappa}(1-\varrho)(1-\varphi)\tfrac{P_{fr}}{N_h}S_m-\mu_mS_m$$

$$\frac{dI_{mfs}}{dt}=ac_s\sigma_f\frac{I_{fs}}{N_h}S_m+ac_a(1-\sigma_f)\frac{I_{fs}}{N_h}S_m+ac_s\frac{\epsilon}{\kappa}(1-\varphi)(1-\nu)\frac{P_{fs}}{N_h}S_m-\mu_mI_{mfs}, \tag{7}$$

$$\frac{dI_{mfr}}{dt}=ac_s\sigma_f(1-\varrho)\frac{I_{fr}}{N_h}S_m+ac_a(1-\sigma_f)(1-\varrho)\frac{I_{fr}}{N_h}S_m+ac_s\frac{\epsilon}{\kappa}(1-\varrho)(1-\varphi)\frac{P_{fr}}{N_h}S_m \tag{8}$$

$$+ac_s\tfrac{\epsilon}{\kappa}(1-\varrho)(1-\varphi)\nu\tfrac{P_{fs}}{N_h}S_m-\mu_mI_{mfr},$$

with

$$N_h=S_h+I_{fs}+I_{fr}+P_f,$$
$$N_m=S_m+I_{mfs}+I_{mfr}$$

P. vivax model

This model outlines *P. vivax* transmission in seven human and three mosquito states: susceptible humans S_h, infected humans by sensitive strain I_{vs}, humans with latent parasites of sensitive strain L_{vs}, post-treatment humans after sensitive infection P_{vs}, infected humans by resistant strain I_{vr}, humans with latent parasites of resistant strain L_{vr}, post-treatment humans after resistant infection P_{vr}, susceptible mosquitoes S_m, infected mosquitoes by sensitive strain I_{mvs}, and infected mosquitoes by resistant strain I_{mvr}. This model reproduces the same transmission interactions of *P. falciparum* model but involves two additional states: L_{vs} and L_{vr}. These states depict humans with dormant hypnozoites of *P. vivax* that cause relapses after first infection. In fact, I_{vs}, I_{vr}, P_{vs} and P_{vr} can remain with latent parasites becoming L_{vs} or L_{vr} instead susceptible. Additionally, the model allows new infections in humans with latent parasites as Fig 2 illustrates. The equations are from the Eq 9 to Eq 18 using the parameters in table 1.

$$\frac{dS_h}{dt}=\Lambda_hN_h-mab\frac{I_{mvs}}{N_m}S_h-mab(1-\varrho)\frac{I_{mvr}}{N_m}S_h+(1-\eta\sigma_v)(1-\phi_u)r_v(I_{vs}+I_{vr}) \tag{9}$$

$$+\mu_{vl}(L_{vs}+L_{vr})+\tfrac{[1-\phi_t(1-\varphi)]}{\kappa}P_{vs}+\tfrac{[1-\phi_t(1-\varphi)]}{\kappa(n+1)}P_{vr}-\mu_hS_h$$

$$\frac{dI_{vs}}{dt}=mab\frac{I_{mvs}}{N_m}S_h-(1-\eta\sigma_v)r_vI_{vs}-\eta\sigma_v\gamma_vI_{vs}+\psi L_{vs}+mab\rho_{sr}\frac{I_{mvs}}{N_m}L_{vr} \tag{10}$$

$$+mab\tfrac{I_{mvs}}{N_m}L_{vs}+mab(1-\rho_{rs})\tfrac{I_{mvr}}{N_m}L_{vs}-\mu_hI_{vs}$$

$$\frac{dL_{vs}}{dt}=(1-\eta\sigma_v)\phi_ur_vI_{vs}+\frac{\phi_t(1-\varphi)}{\kappa}P_{vs}-\mu_{vl}L_{vs}-\psi L_{vs}-mab\frac{I_{mvs}}{N_m}L_{vs} \tag{11}$$

$$-mab(1-\varrho)\tfrac{I_{mvr}}{N_m}L_{vs}-\mu_hL_{vs}$$

$$\frac{dP_{vs}}{dt}=\eta\sigma_v\gamma_vI_{vs}-\frac{P_{vs}}{\kappa}-\mu_hP_{vs} \tag{12}$$

$$\frac{dI_{vr}}{d_t}=mab(1-\varrho)\frac{I_{mvr}}{N_m}S_h-(1-\eta\sigma_v)r_vI_{vr}-\frac{\eta\sigma_v\gamma_v}{n+1}I_{vr}+\psi L_{vr}+mab(1-\varrho)\frac{I_{mvr}}{N_m}L_{vr} \tag{13}$$

$$+mab(1-\varrho)\rho_{rs}\tfrac{I_{mvr}}{N_m}L_{vs}+mab(1-\rho_{sr})\tfrac{I_{mvs}}{N_m}L_{vr}-\mu_hI_{vr}$$

$$\frac{dL_{vr}}{dt}=(1-\eta\sigma_v)\phi_ur_vI_{vr}+\frac{\phi_t(1-\varphi)}{\kappa(n+1)}P_{vr}-\psi L_{vr}-\mu_{vl}L_{vr}-mab(1-\varrho)\frac{I_{mvr}}{N_m}L_{vr} \tag{14}$$

$$-mab\tfrac{I_{mvs}}{N_m}L_{vr}-\mu_hL_{vr}$$

bioRxiv preprint doi: https://doi.org/10.1101/603597; this version posted September 6, 2019. The copyright holder for this preprint (which was not certified by peer review) is the author/funder, who has granted bioRxiv a license to display the preprint in perpetuity. It is made available under aCC-BY-NC-ND 4.0 International license.

Table 1. Model parameters

Parameter	Description	Value
m	Mosquitoes per human N_m/N_h	2435/625 [25]
a	Biting rate (day^{-1})	0.21 [26]
b	Transmission probability from an infected mosquito to a susceptible human	0.5 [27]
η	Treatment coverage	0-1
σ_f	Proportion of symptomatic humans infected by *P. falciparum*	0.9 [28]
σ_v	Proportion of symptomatic humans infected by *P. vivax*	0.33 [29]
r_f	Recovery rate of untreated infected-humans by *P. falciparum* (day^{-1})	1/287 [25]
r_v	Recovery rate of untreated infected-humans by *P. vivax* (day^{-1})	1/60 [30]
γ_f	Progression rate from infected to post-treatment humans affected by *P. falciparum* (day^{-1})	1/2 [25]
γ_v	Progression rate from infected to post-treatment humans affected by *P. vivax* (day^{-1})	1/9 [10, 31]
φ	Proportion of treated humans with primaquine	0-1
κ	Protective period of the treatment	see table 2
ϵ	Infectious period of post-treatment humans	see table 2
ϱ	Resistance cost	0-0.6 [12]
n	Recurrences produced by the resistant strain	1
Λ_h	Human birth rate (day^{-1}). We assumed constant population	0
Λ_m	Mosquito birth rate (day^{-1})	0.033 [25]
μ_h	Human death rate. We assumed constant population	0
μ_m	Mosquito death rate (day^{-1}). We assumed constant population	0.033
c_a	Transmission probability from an asymptomatic human to susceptible mosquito	0.12 [32]
c_s	Transmission probability from an infected-symptomatic human to susceptible mosquito	0.4 [32]
ν	Probability of transmitting a resistant parasite from a post-treatment infected by a sensitive strain	see table 2
ψ	Hypnozoite relapse rate (day^{-1}). We assumed tropical relapses	1/60 [33]
ρ_{sr}	Probability of developing sensitive infection by the contact between an infected mosquito by sensitive strain and a human with latent parasites of the resistant strain	0.5
ρ_{rs}	Probability of developing resistant infection by the contact between an infected mosquito by resistant strain and a human with latent parasites of the sensitive strain	0.5
ϕ_t	Probability of post-treatment human of remaining with latent parasites	0.21 [34]
ϕ_u	Probability of an untreated-infected human of remaining with latent parasites	0.4-0.9 [35]
μ_{vl}	Clearance rate of latent parasites (hypnozoites) day^{-1}	1/425 [26]

$$\frac{dP_{vr}}{dt} = \frac{\eta\sigma_v\gamma_v}{n+1}I_{vs} - \frac{P_{vr}}{\kappa(n+1)} - \mu_h P_{vr} \tag{15}$$

$$\begin{aligned}\frac{dS_m}{dt} &= \Lambda_m N_m - [ac_s\sigma_v + ac_a(1-\sigma_v)]\frac{I_{vs}}{N_h}S_m - ac_s\frac{\epsilon}{\kappa}(1-\varphi)(1-\nu)\frac{P_{vs}}{N_h}S_m \\ &-[ac_s\sigma_v + ac_a(1-\sigma_v)](1-\varrho)\tfrac{I_{vr}}{N_h}S_m - ac_s\tfrac{\epsilon}{\kappa}(1-\varrho)(1-\varphi)\tfrac{P_{vr}}{N_h}S_m \\ &-ac_s\tfrac{\epsilon}{\kappa}(1-\varrho)(1-\varphi)\nu\tfrac{P_{vs}}{N_h}S_m - \mu_m S_m\end{aligned} \tag{16}$$

bioRxiv preprint doi: https://doi.org/10.1101/603597; this version posted September 6, 2019. The copyright holder for this preprint (which was not certified by peer review) is the author/funder, who has granted bioRxiv a license to display the preprint in perpetuity. It is made available under aCC-BY-NC-ND 4.0 International license.

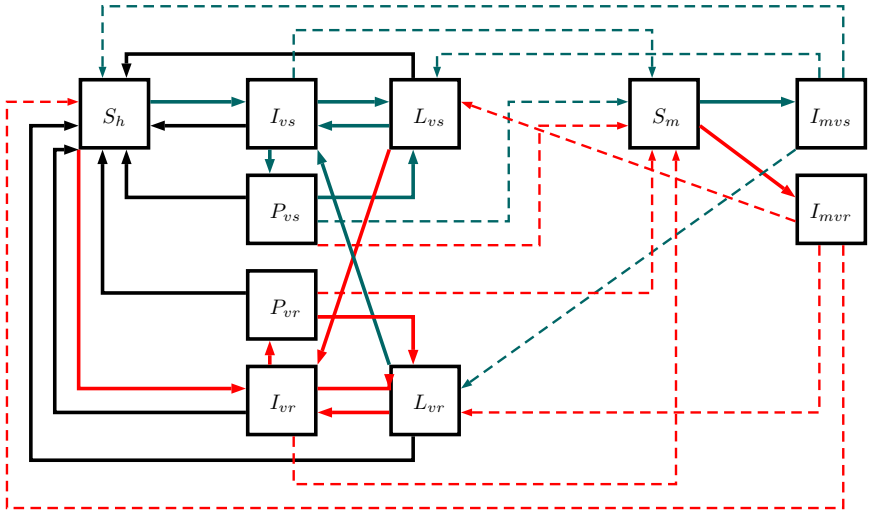

Fig 2. *P. vivax* model. This structure illustrates the transmission in seven human and three mosquito states: susceptible humans S_h, infected humans by sensitive strain I_{vs}, humans with latent parasites of sensitive strain L_{vs}, post-treatment humans after sensitive infection P_{vs}, infected humans by resistant strain I_{vr}, humans with latent parasites of resistant strain L_{vr}, post-treatment humans after resistant infection P_{vr}, susceptible mosquitoes S_m, infected mosquitoes by sensitive strain I_{mvs}, and infected mosquitoes by resistant strain I_{mvr}. Complete lines reproduce the possible progressions between states while dotted lines reproduce the parasite transmission between humans and mosquitoes. Red lines display the flow of resistant parasites, gray lines display the flow of sensitive parasites, and black lines display the flow without parasites.

$$\frac{dI_{mvs}}{dt} = ac_s\sigma_v\frac{I_{vs}}{N_h}S_m + ac_a(1-\sigma_v)\frac{I_{vs}}{N_h}S_m + ac_s\frac{\epsilon}{\kappa}(1-\varphi)(1-\nu)\frac{P_{vs}}{N_h}S_m - \mu_m I_{mvs}, \tag{17}$$

$$\frac{dI_{mvr}}{dt} = ac_s\sigma_v(1-\varrho)\frac{I_{vr}}{N_h}S_m + ac_a(1-\varrho)(1-\sigma_v)\frac{I_{vr}}{N_h}S_m + ac_s\frac{\epsilon}{\kappa}(1-\varrho)(1-\varphi)\frac{P_{vr}}{N_h}S_m \tag{18}$$

$$+ac_s\tfrac{\epsilon}{\kappa}(1-\varrho)(1-\varphi)\nu\tfrac{P_{vs}}{N_h}S_m - \mu_m I_{mvr},$$

with

$$N_h = S_h + I_{vs} + L_{vs} + I_{vr} + L_{vr} + P_v,$$
$$N_m = S_m + I_{mvs} + I_{mvr}$$

Resistance cost

Resistance cost (ϱ) reduces parasite fitness when a mutation occurs and generates resistance against a specific treatment [13]. We modeled this cost as a transmission reduction in resistant strains multiplying the transmission rate with the term $(1-\varrho)$ that decreases the transmission in a ϱ percent.

Asymptomatic infections

We considered asymptomatic humans as proportion of infected humans that do not search for antimalarial treatment. They act as parasite reservoirs but their transmission potential are lower than symptomatic humans. In the model, the transmission probabilities from asymptomatic and symptomatic individuals to susceptible mosquitoes occur with different probabilities c_a and c_s, respectively, considering $c_a < c_s$ [36]. This species–dependent parameter is a consequence of the immunological profile in an endemic region due to exposition periods and it also varies according with *Plasmodium* specie [28]. Hence, we considered $(1-\sigma_f)$ and $(1-\sigma_v)$ as constant proportion of asymptomatic humans infected by *P. falciparum* and *P. vivax* assuming a long exposition period before treatment.

bioRxiv preprint doi: https://doi.org/10.1101/603597; this version posted September 6, 2019. The copyright holder for this preprint (which was not certified by peer review) is the author/funder, who has granted bioRxiv a license to display the preprint in perpetuity. It is made available under aCC-BY-NC-ND 4.0 International license.

Antimalarial treatment

Treatment coverage η varies from 0% to 100% of infected humans, adopting a single treatment-regimen. Additionally, the model also permits an evaluation of treatment plus primaquine in by a φ proportion of treated humans impacting gametocyte transmission and the *P. vivax* hypnozoites.

Infectious period

Infected without available treatment and asymptomatic humans recover from infection at r rate with $1/r$ as infectious period because they do not employ treatment. On the other hand, treated humans advance to post-treatment state at γ rate with $1/\gamma$ as infectious period. Moreover, $1/\gamma_v > 1/\gamma_f$ because the early development of gametocytes in *P. vivax* triggers longer infectious period before treatment than *P. falciparum* [28, 46].

Likewise, we differentiated the infectious periods between sensitive and resistant strains according with the recurrences associated at resistant parasites [37]. The mean infectious time for a sensitive strain is $1/\gamma$ infectious period, whereas mean infectious period of a resistant strain is $(n+1)/\gamma$, with n recurrences. This is because humans infected by resistant parasite extend their infectious periods when a recurrence occurs.

Post-treatment period

Post-treatment period engages three dynamics: parasite clearance, drug half-life and emergence of resistant parasites. Parasite clearance of drugs such as chloroquine and artemisinin components differs and also affects specific parasite forms per species [38, 39]. Parasite clearance ϵ characterizes the infectious period after treatment. Drug half-life κ corresponds to time interval when treatment remains in the blood conferring a protective period [40]. The emergence of resistant parasites occurs by the selection of parasite strains under residual drug concentration and we defined ν as the probability of transmitting a resistant parasite from a post-treatment infected by a sensitive strain [11].

Basic reproduction number

We derived the basic reproduction number adopting the next generation matrix approach proposed in [41–43]. We assumed constant populations in humans (N_h) and mosquitoes (N_m) where $\Lambda_h = 0$, $\mu_h = 0$ and $\Lambda_m = \mu_m$. In this way, we employed the disease free disease-stable steady state ($S_h = N_h$; $S_m = N_m$; the rest states equal to 0) to linearize the equations and then, we build the transmission and transition matrix in order to derive the basic reproduction numbers.

Simulation

Our aim is to simulate the spread of drug resistance in *P. falciparum* and *P. vivax* species comparing between common-employed treatment regimens. We contrasted regimens between the adoption of four treatment lines: chloroquine (CQ), chloroquine plus primaquine (CQ+PQ), artemisinin combination therapy (ACT) and ACT plus PQ (ACT+PQ). The initial condition is only the presence of the sensitive strain and the table 2 summarized the parameters to each treatment regiment. We implemented the equations in RStudio using deSolve package [44].

Table 2. Treatment parameters

Treatment regimen	Protective period [38]	Infectious period after treatment [10, 38, 46]	probability of transmitting a resistant parasite from P_{fs} and P_vs [45]
CQ	30 days	2.1 days (*P. vivax*), 11 days (*P. falciparum*)	10^{-12}
CQ+PQ	30 days	2.1 days with ($\rho = 1$)	10^{-12}
ACT	3 days	1.55 days (*P. vivax*), 11 days (*P. falciparum*)	10^{-24}
ACT+PQ	3 days	1.55 days ($\rho = 1$)	10^{-24}

bioRxiv preprint doi: https://doi.org/10.1101/603597; this version posted September 6, 2019. The copyright holder for this preprint (which was not certified by peer review) is the author/funder, who has granted bioRxiv a license to display the preprint in perpetuity. It is made available under aCC-BY-NC-ND 4.0 International license.

Sensitivity analysis

Finally, we performed a sensitivity analysis of parameter models on the emergence-time of the resistant strain using Latin Hypercube Sampling (LHS) to respond at the uncertainty of estimated values and also to assess the parameter influence [47]. We implemented the analysis in RStudio using deSolve, lhs and sensitivity packages [44, 48, 49].

Results

Basic reproduction number

We found the basic reproduction number for the sensitive and resistant strains in both *P. falciparum* and *P. vivax* models (see from Eq 19 to Eq 22). Resistance cost cuts down R_0s of resistant strains in comparison with sensitive while the recurrences increase them for both species. On the other hand, terms associated with latent *vivax* parasites reduce R_0 of this specie in same proportion between strains.

$$R_{0fs} = \sqrt{\frac{ma^2b}{\mu_m[(1-\eta\sigma_f)r_f + \eta\sigma_f\gamma_f]}\left[c_s\sigma_f + c_a(1-\sigma_f) + \eta\sigma_f\gamma_f c_s\epsilon(1-\nu)(1-\varphi)\right]} \tag{19}$$

$$R_{0fr} = (1-\varrho)\sqrt{\frac{ma^2b}{\mu_m[(1-\eta\sigma_f)r_f + \frac{\eta\sigma_f\gamma_f}{n+1}]}\left[c_s\sigma_f + c_a(1-\sigma_f) + \eta\sigma_f\gamma_f c_s\epsilon(1-\varphi)\right]} \tag{20}$$

$$R_{0vs} = \sqrt{\frac{ma^2b(\psi+\mu_{vl})[c_s\sigma_v + c_a(1-\sigma_v) + \eta\sigma_v\gamma_v c_s\epsilon(1-\nu)(1-\varphi)]}{\mu_m\left[(\psi+\mu_{vl})[(1-\eta\sigma_v)r_v + \eta\sigma_v\gamma_v] - \psi[\phi_t(1-\varphi)\eta\sigma_v\gamma_v + \phi_u(1-\eta\sigma_v)r_v]\right]}} \tag{21}$$

$$R_{0vr} = (1-\varrho)\sqrt{\frac{ma^2b(\psi+\mu_{vl})[c_s\sigma_v + ca_a(1-\sigma_v) + \eta\sigma_v\gamma_v c_s\epsilon(1-\varphi)]}{\mu_m\left[(\psi+\mu_{vl})[(1-\eta\sigma_v)r_v + \frac{\eta\sigma_v\gamma_v}{n+1}] - \psi[\frac{phi_t(1-\varphi)\eta\sigma_v\gamma_v}{n+1} + \phi_u(1-\eta\sigma_v)r_v]\right]}} \tag{22}$$

We evaluated the basic reproduction number R_0 by varying cost resistance, treatment plus primaquine and infectious time before and after treatment (see Fig 3). In general, increases in drug coverage decrease R_0s of *P. falciparum* at higher rate than R_0s of *P. vivax*. R_0 of sensitive *P. vivax* overcomes more R_0s of resistant stains at different resistance cost than R_0 of sensitive *P. falciparum*. Treatment plus primaquine influences at same the R_0s of sensitives and resistant stains for both species. A longer infectious period before and after treatment induces highest R_0s but only the longer infectious period before boosted the sensitive R_0 to stay over the resistant R_0; this effect is higher in *P. vivax*.

Simulation

Although the regimens generated a more delayed emergence of resistant *P. vivax* strain, they accomplished a lesser reduction in the proportion of infected humans for this specie (see Fig 4). Treatment with chloroquine (CQ) contributed to a higher proportion of post-treatment humans, especially in the case of *P. falciparum*, and the emergence of resistant *P. vivax* took 2-fold as long time as resistant *P. falciparum*. Primaquine addition (CQ+PQ) decreased infected and post-treatment humans of *P. falciparum*, and humans with latent parasites of *P. vivax* but this regimen implied the emergence of resistant parasites in less time.

Regimens with artemisinin combination therapy delayed the emergence of resistant *P. vivax* three times as long as resistant *P. falciparum* but this regimen affected the proportion of infected humans less than chloroquine regimen. Primaquine addition (ACT+PQ) also decreased infected and post-treatment humans of *P. falciparum*, and humans with latent parasites of *P. vivax* though the emergence of resistant parasites remained at a similar time as the ACT without primaquine.

bioRxiv preprint doi: https://doi.org/10.1101/603597; this version posted September 6, 2019. The copyright holder for this preprint (which was not certified by peer review) is the author/funder, who has granted bioRxiv a license to display the preprint in perpetuity. It is made available under aCC-BY-NC-ND 4.0 International license.

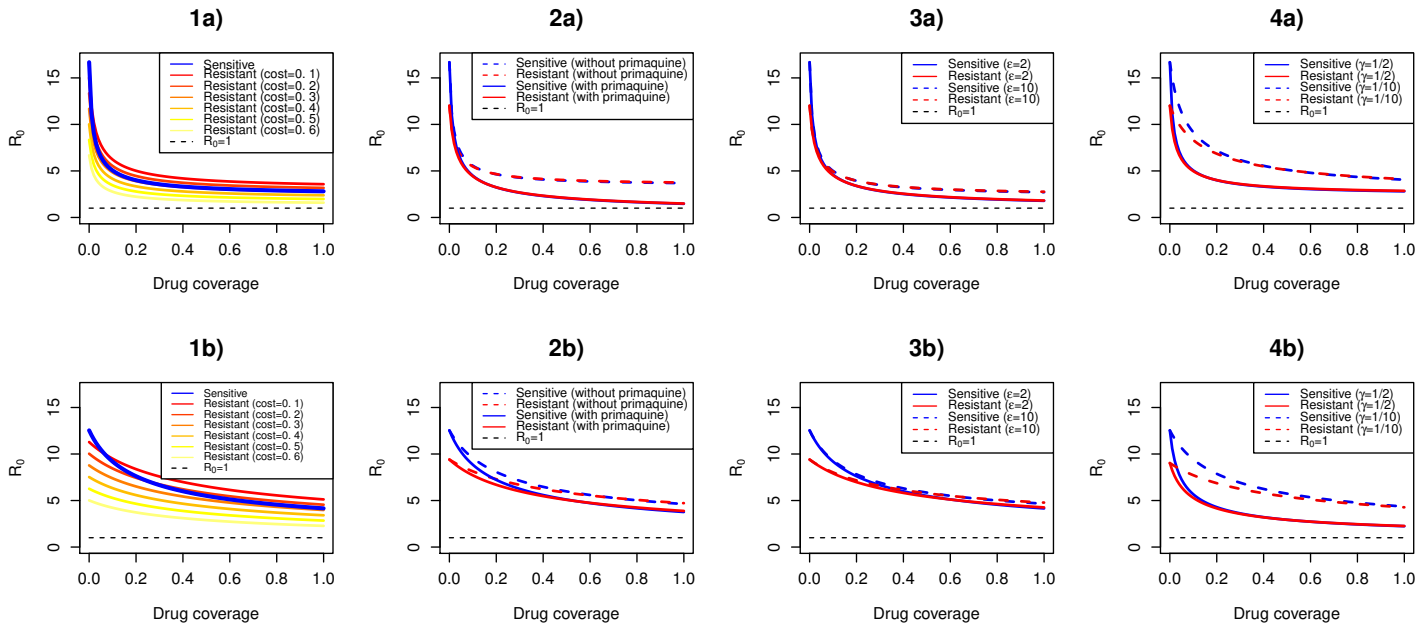

Fig 3. Drug coverage varying the basic reproduction numbers. The figure illustrates R_0 lines for *P. falciparum* (figures a) and *P. vivax* (figures b) models dividing by sensitive and resistant strains. 1(a and 1(b display R_0 lines of sensitive and resistant strains with different resistance cost; 2(a and 2(b display R_0 lines using or non-using primaquine; 3(a and 3(b display R_0 lines at two infectious periods after treatment in days (ϵ); 4(a and 4(b display R_0 lines at two infectious periods before treatment in days ($1/\gamma$).

Sensitivity analysis

In this model, the maximum influence is given by resistance cost with a proportional relation which implies this parameter is the one that more delays the emergence of resistant parasites either *P. vivax* or *P. falciparum* (see Fig 5). Five parameters also obtained proportional relation but with a low parameter influence: transmission probability from an symptomatic to susceptible mosquito, infectious period of post-treatment human, probability of developing sensitive infection by the contact between I_{mvs} and a L_{vs} (only in *P. vivax*) and probability of post-treatment human of remaining with latent parasites (only in *P. vivax*).

Recurrences by drug resistance obtained the most negative influence in *P. falciparum* that implies an earlier emergence of the resistant strain with increments in this parameter. Ten parameters also obtained a negative influence but with a lower value (see Fig. 5). On the other hand, three parameters had negative influence in *P. vivax* and positive in *P. falciparum* but with a lower value: transmission probability from an asymptomatic to susceptible mosquito, proportion of treated humans with primaquine and the protective period.

Discussion

We found that the early transmission before treatment and the low effectiveness of drug coverage support the prevalence of sensitive parasites delaying the emergence of resistant *P. vivax*. In fact, the reproduction numbers of sensitive *P. vivax* surpassed the reproduction numbers of resistant ones when the infectious period before treatment was greater and this usually occurs in *P. vivax* transmission by the early development of gametocytes [28]. On the other hand, all treatment regimens exhibited a lower response against the proportion of *P. vivax* infected-humans. This commonly happens with control efforts that work slowly against *P. vivax* [50].

Artemisinin-based combinated therapy (ACT) and Chloroquine (CQ) caused the emergence of *P. falciparum*-resistant in a similar time scale whereas ACT delayed the emergence of *P. vivax*-resistant. In theory, development of drug resistance to a set of drugs is less likely than a single drug and this reinforces the improvement of combined therapies [45].

bioRxiv preprint doi: https://doi.org/10.1101/603597; this version posted September 6, 2019. The copyright holder for this preprint (which was not certified by peer review) is the author/funder, who has granted bioRxiv a license to display the preprint in perpetuity. It is made available under aCC-BY-NC-ND 4.0 International license.

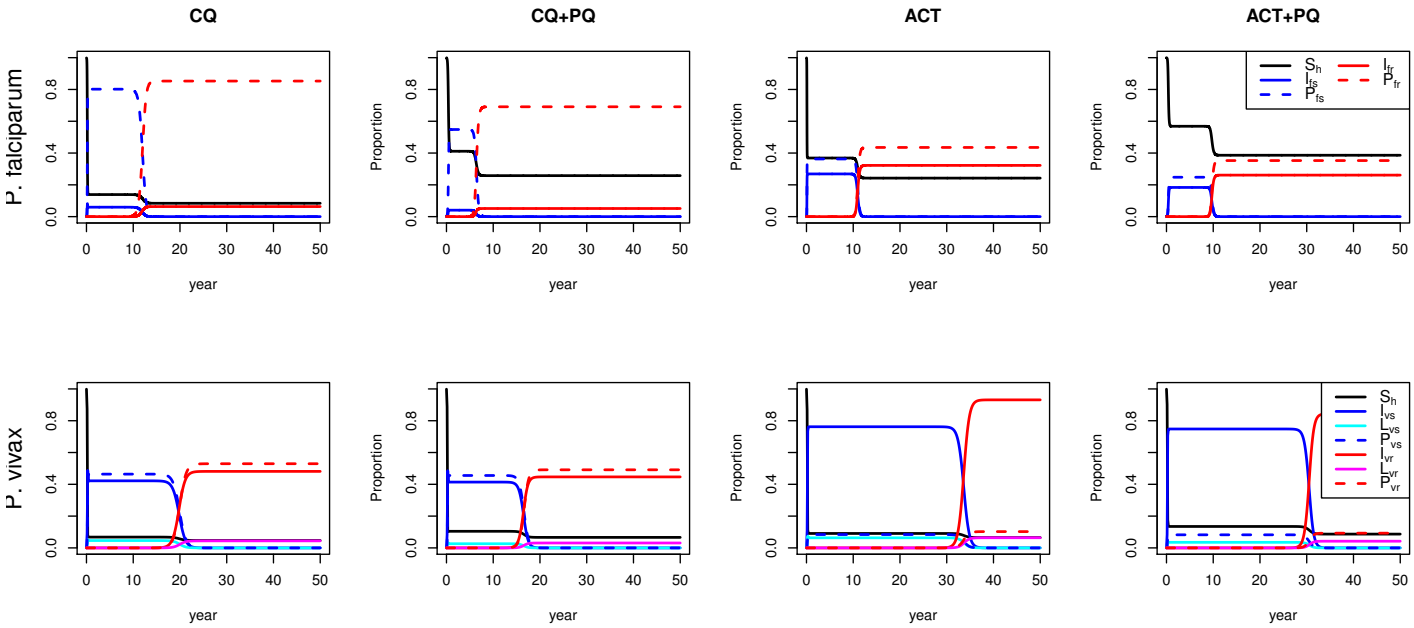

Fig 4. Simulation of treatment regimens. This figure illustrates the implementation of four treatment-regimens: chloroquine (CQ), chloroquine plus primaquine (CQ+PQ), artemisinin combination therapy (ACT) and artemisinin combination therapy plus primaquine (ACT+PQ). First row shows the simulated regimens in *P. falciparum* model and second row shows the simulated regimens in *P. vivax* model.

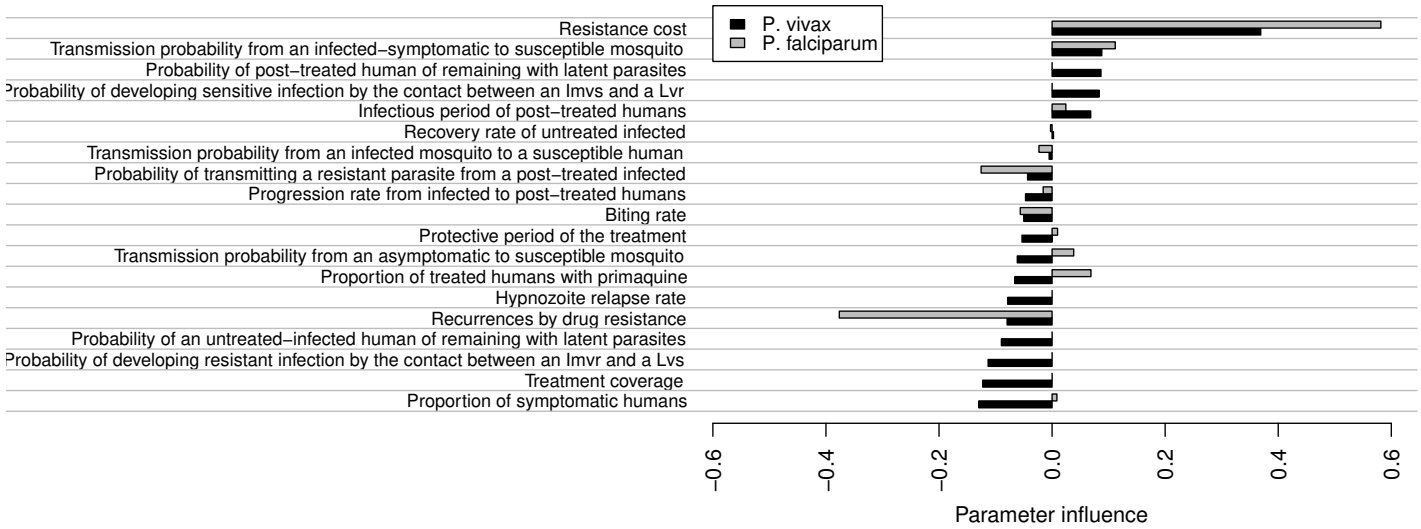

Fig 5. Parameter sensitivity on the emergence-time of the resistant strain. the figure illustrates parameter influence where -1 represents the maximum inverse relation (accelerate drug resistance), 1 represents the maximum proportional relation (delay drug resistance) and 0 represents no relation.

bioRxiv preprint doi: https://doi.org/10.1101/603597; this version posted September 6, 2019. The copyright holder for this preprint (which was not certified by peer review) is the author/funder, who has granted bioRxiv a license to display the preprint in perpetuity. It is made available under aCC-BY-NC-ND 4.0 International license.

Nevertheless, our results show that the rapid parasite-clearance and the shorter protective period with ACT against *P. falciparum* avoided the transmission of sensitive parasites after-treatment allowing a similar emergence period of resistant parasite as CQ in spite of the lower probability of transmitting resistant parasites with ACT. Actually, ACT-resistance in *P. falciparum* have emerged after 10 years of use in 2008 while CQ-resistance emerged in the 50's, ten years after CQ adoption, indicating a connection with the current results [51, 52].

P. vivax CQ-resistant emerged earlier than ACT resistant but CQ achieved a higher reduction in the prevalence of infected humans in overall simulations. Previous studies reported CQ-resistance whereas we have no reports of ACT-resistance in *P. vivax* and our simulated ACT-regimen exhibited a longer emergence of resistant strain than the period since ACT adoption bringing an explanation of the no reported ACT-resistance [53]. On the other hand, treatment plus primaquine (PQ) declined the proportion of humans with latent parasites but it accelerated the emergence of resistant strain because PQ avoids the transmission of sensitive parasites after-treatment. This result challenges the suggestion of PQ-dose to avoid the transmission of resistant parasites and *P. vivax* relapses can explain the underestimate resistance induced by PQ effect [53, 54].

The main limitation to validate the results and model parameterization is the necessary data in distinct ways: disease prevalence, resistance frequency, treatment effort and transmission conditions. Data bases such as the Malaria Atlas Project (MAP) and the World Wide Antimalarial Resistance Network (WWARN) provide reports of disease incidence and studies for monitoring the drug resistance but several factors causes disturbances to track drug resistance: different sample sizes in clinical trials, intermittent periods of monitoring, absent of drug-coverage measures and different levels of resistance [55, 56]. Therefore, we accomplished a sensitive analysis that revealed the resistance cost and the recurrences by drug resistance as the most influential parameters and the rest of parameters had lower influence on the emergence of resistant parasites.

P. vivax and *P. falciparum* develop drug resistance but the pace depends on the maintenance of sensitive parasites. In fact, *P. vivax* supported sensitive parasites through the transmission before treatment, reservoirs of latent parasites and asymptomatic humans causing a less effectiveness in treatment-regimen effort. On the other hand, *P. falciparum* develops an earlier resistance because treatment regimens accomplished a greater reduction in the reproduction numbers and proportion of infected humans in sensitive parasites. These results imply that early attention of symptomatic humans and reservoirs of *P. vivax* helps reduce the population of sensitive parasites but it would accelerate drug resistance.

Acknowledgments

MA and DV are grateful for the Print internationalization program supported by Coordenação de Aperfeiçoamento de Pessoal de Nível Superior (CAPES, http://www.capes.br) and Fundação Oswaldo Cruz (Fiocruz, http://www.fiocruz.br) and MA is grateful for the scholarship support from Instituto Oswaldo Cruz (IOC, http://www.ioc.fiocruz.br) in the graduate program. DV has support from Conselho Nacional de Desenvolvimento Científico e Tecnológico (CNPq, http://www.cnpq.br, projeto Universal, Ref. 424141/2018-3).

References

1. World Health Organization WHO. Global report on antimalarial efficacy and drug resistance: 2000-2010. Geneva: Drug Resistance and Containment Unit, Global Malaria Program,World Health Organization.;2010.

2. Payne D. Spread of chloroquine resistance in *Plasmodium falciparum*. Parasitol Today. 1987 Aug;3(8):241-6.

3. Peters W. Resistance in human malaria IV: 4-aminoquinolines and multiple resistance, Chemotherapy and drug resistance in malaria. London Academic Press. 1987; 2:659-786.

4. Dondorp AM, et al. Artemisinin resistance in *Plasmodium falciparum* malaria. Engl J Med. 2009 Jul; 361:455-467.

5. Liwang Cui, et al. Antimalarial Drug Resistance: Literature Review and Activities and Findings of the ICEMR Network. Am. J. Trop. Med. Hyg. 2015;93(3):57-68.

6. Ric N Price, et al. Global extent of chloroquine-resistant *Plasmodium vivax: a systematic review and meta-analysis*. Lancet Infect Dis. 2014 Oct;14(10):982-91.

bioRxiv preprint doi: https://doi.org/10.1101/603597; this version posted September 6, 2019. The copyright holder for this preprint (which was not certified by peer review) is the author/funder, who has granted bioRxiv a license to display the preprint in perpetuity. It is made available under aCC-BY-NC-ND 4.0 International license.

7. World Health Organization. Italy: Guidelines for the treatment of malaria, Third edition. World Health Organization.; 2015.

8. Escalante AA, Cornejo OE, Rojas A, Udhayakumar V, Lal AA. Assessing the effect of natural selection in malaria parasites. Trends Parasitol. 2004 Aug;20(8):388-95.

9. Tania F. de Koning-Ward, Matthew W.A. Dixon, Leann Tilley, Paul R. Gilson. *Plasmodium* species: master renovators of their host cells. Nat Rev Microbiol. 2016 Aug;14(8):494-507.

10. Kristan A Schneider, Ananias A Escalante. Fitness components and natural selection: why are there different patterns on the emergence of drug resistance in *Plasmodium falciparum* and *Plasmodium vivax*?. Malar J. 2013 Jan 11;12:15.

11. Katherine Kay, Ian M Hastings. Measuring windows of selection for anti-malarial drug treatments. Malar J. 2015 Jul 31;14:292.

12. Klein EY, Smith DL, Boni MF, Laxminarayan R. Clinically immune hosts as a refuge for drug-sensitive malaria parasites. Malar J. 2008 Apr 25;7:67.

13. Silvie Huijben, Brian H.K. Chan, William A. Nelson, Andrew F. Read. The impact of within-host ecology on the fitness of a drug-resistant parasite. Evol Med Public Health. 2018 Jun 27;2018(1):127-137.

14. Artzy-Randrup Y, Alonso D, Pascual M. Transmission intensity and drug resistance in malaria population dynamics: implications for climate change. PLoS One. 2010 Oct 26;5(10):e13588.

15. Legros M, Bonhoeffer S. A combined within-host and between-hosts modelling framework for the evolution of resistance to antimalarial drugs. J R Soc Interface. 2016 Apr; 13(117): 20160148.

16. Hannah C. Slater, Lucy C. Okell, Azra C. Ghani. Mathematical Modelling to Guide Drug Development for Malaria Elimination. Trends Parasitol. 2017 Mar;33(3):175-184.

17. Hamza A.Babiker, Amal A.H.Gadalla, Lisa C.Ranford-Cartwright. The role of asymptomatic *P. falciparum* parasitaemia in the evolution of antimalarial drug resistance in areas of seasonal transmission. Drug Resist Updat. 2013 Feb-Apr;16(1-2):1-9.

18. Aleisha R Brock, Carole A Gibbs, Joshua V Ross, Adrian Esterman. The Impact of Antimalarial Use on the Emergence and Transmission of *Plasmodium falciparum* Resistance: A Scoping Review of Mathematical Models. Trop Med Infect Dis. 2017 Oct 15;2(4).

19. JC Koella, R Antia. Epidemiological models for the spread of anti-malarial resistance. Malar J. 2003 Feb 19;2:3.

20. Tchuenche JM, Chiyaka C, Chan D, Matthews A, Mayer G. A mathematical model for antimalarial drug resistance. Math Med Biol. 2011 Dec;28(4):335-55.

21. Mario Cañón, Hernando Diaz, Andrés Olarte. Mathematical model for the spread of drug resistance in *Plasmodium falciparum* parasite considering transmission conditions. J Theor Biol. 2017 Dec 21;435:1-11.

22. Nick Scott, et al. Implications of population-level immunity for the emergence of artemisinin-resistant malaria: a mathematical model. Malar J. 2018 Aug 2;17(1):279.

23. World Health Organization WHO. World Malaria Report. France: WHO Library Cataloguing-in-Publication Data.:2018.

24. Smith DL, et al. Ross, Macdonald, and a Theory for the Dynamics and Control of Mosquito-Transmitted Pathogens. PLoS Pathog. 2012;8(4):e1002588.

25. Chitnis N, Hyman JM, Cushing JM. Determining important parameters in the spread of malaria through the sensitivity analysis of a mathematical model. Bull Math Biol. 2008 Jul;70(5):1272-96.

bioRxiv preprint doi: https://doi.org/10.1101/603597; this version posted September 6, 2019. The copyright holder for this preprint (which was not certified by peer review) is the author/funder, who has granted bioRxiv a license to display the preprint in perpetuity. It is made available under aCC-BY-NC-ND 4.0 International license.

26. Michael T White, et al. Modelling the contribution of the hypnozoite reservoir to *Plasmodium vivax* transmission. Elife. 2014 Nov 18;3.

27. David L. Smith, Chris J. Drakeley, Christinah Chiyaka, Simon I. Hay. A quantitative analysis of transmission efficiency versus intensity for malaria. Nat Commun. 2010 Nov 2;1:108.

28. Kim A Lindblade, Laura Steinhardt, Aaron Samuels, S Patrick Kachur, Laurence Slutsker. The silent threat: asymptomatic parasitemia and malaria transmission. Expert Rev Anti Infect Ther. 2013 Jun;11(6):623-39.

29. Anne C. G. Almeida, et al. High proportions of asymptomatic and submicroscopic *Plasmodium vivax* infections in a peri-urban area of low transmission in the Brazilian Amazon. Parasit Vectors. 2018 Mar 20;11(1):194.

30. Collins WE, Jeffery GM, Roberts JM. A retrospective examination of anemia during infection of humans with *Plasmodium vivax*. Am J Trop Med Hyg. 2003 Apr;68(4):410-2.

31. M. Nacher, et al. Comparison of artesunate and chloroquine activities against *Plasmodium vivax* gametocytes. Antimicrob Agents Chemother. 2004 Jul;48(7):2751-2.

32. Jamie T. Griffin, et al. Reducing *Plasmodium falciparum* Malaria Transmission in Africa: A Model-Based Evaluation of Intervention Strategies. PLoS Med. 2010 Aug 10;7(8). pii: e1000324.

33. Olivia Prosper, Maia Martcheva. Impact of enhanced malaria control on the competition between *Plasmodium falciparum* and *Plasmodium vivax* in India. Math Biosci. 2013 Mar;242(1):33-50.

34. T. Adak, V.P. Sharma, V.S. Orlov. Studies on the *Plasmodium vivax* relapse pattern in Delhi, India. Am J Trop Med Hyg. 1998 Jul;59(1):175-9.

35. Michael T. White, Variation in relapse frequency and the transmission potential of *Plasmodium vivax* malaria. Proc Biol Sci. 2016 Mar 30;283(1827):20160048.

36. Keillen M. Martins-Campos, et al. Infection of *Anopheles aquasalis* from symptomatic and asymptomatic *Plasmodium vivax* infections in Manaus, western Brazilian Amazon. Parasit Vectors. 2018 May 4;11(1):288.

37. World Health Organization WHO. Methods for Surveillance of antimalarial drug efficacy. France: Global malaria programme ,World Health Organization.;2009.

38. Douglas NM, Anstey NM, Angus BJ, Nosten F, Price RN. Artemisinin combination therapy for vivax malaria. Lancet Infect Dis. 2010 Jun;10(6):405-16.

39. Bousema T, Drakeley C. Epidemiology and infectivity of *Plasmodium falciparum* and *Plasmodium vivax* gametocytes in relation to malaria control and elimination. Clin Microbiol Rev. 2011 Apr;24(2):377-410.

40. Francesco Castelli, Silvia Odolini, Beatrice Autino, Emanuele Foca, Rosario Russo. Malaria Prophylaxis: A Comprehensive Review. Pharmaceuticals (Basel). 2010 Oct; 3(10): 3212–3239.

41. O. Diekmann, J. A. P. Heesterbeek, M. G. Roberts. The construction of next-generation matrices for compartmental epidemic models. J R Soc Interface. 2010 Jun 6; 7(47): 873–885.

42. Diekmann O., Heesterbeek J.A.P., Metz J.A.J. On the definition and the computation of the basic reproduction ratio R0 in models for infectious diseases in heterogeneous populations. J. Math. Biol. 1990; 28(4): 365–382.

43. P. van den Driessche, James Watmough. Reproduction numbers and sub-threshold endemic equilibria for compartmental models of disease transmission. Math Biosci. 2002 Nov-Dec;180:29-48.

44. deSolve package: https://cran.r-project.org/web/packages/deSolve/index.html.

45. Nicholas J. White. Antimalarial drug resistance. J Clin Invest. 2004 Apr 15; 113(8): 1084–1092.

46. White NJ Malaria parasite clearance. Malar J. 2017 Feb 23;16(1):88.

bioRxiv preprint doi: https://doi.org/10.1101/603597; this version posted September 6, 2019. The copyright holder for this preprint (which was not certified by peer review) is the author/funder, who has granted bioRxiv a license to display the preprint in perpetuity. It is made available under aCC-BY-NC-ND 4.0 International license.

47. M. D. Mckay, R. J. Beckman, W. J. Conover. A Comparison of Three Methods for Selecting Values of Input Variables in the Analysis of Output from a Computer Code. Technometrics. 1979 May; 21(2):239-245.

48. lhs package: https://cran.r-project.org/web/packages/lhs/index.html.

49. sensitivity package: https://cran.r-project.org/web/packages/sensitivity/index.html.

50. Liwang Cui, Sungano Mharakurwa, Daouda Ndiaye, Pradipsinh K. Rathod, Philip J. Rosenthal. Antimalarial Drug Resistance: Literature Review and Activities and Findings of the ICEMR Network. Am J Trop Med Hyg. 2015 Sep 2; 93(3 Suppl): 57–68.

51. Noedl H, et al. Evidence of artemisinin-resistant malaria in western Cambodia. N Engl J Med. 2008 Dec 11;359(24):2619-20.

52. Payne D. Spread of chloroquine resistance in *Plasmodium falciparum*. Parasitol Today. 1987 Aug;3(8):241-6.

53. Haldar K, Bhattacharjee S, Safeukui I. Drug resistance in *Plasmodium*. Nat Rev Microbiol. 2018 Mar;16(3):156-170.

54. Graves PM, Gelband H, Garner P Primaquine or other 8-aminoquinoline for reducing Plasmodium falciparum transmission. Cochrane Database Syst Rev. 2015 Feb 19;(2):CD008152.

55. THE WorldWide Antimalarial Research Network (WWARN): https://www.wwarn.org/about-us/our-work

56. The Malaria Atlas Project (MAP): https://map.ox.ac.uk/.