The Cellular Immunity Agent-Based Model (CIABM): A computational model to examine the role of cellular immunity in viral infection

R. Chase Cockrell[1], Jason Botten[2], Sean A. Diehl[3] and Gary An[1]

[1]Department of Surgery, University of Vermont
[2]Department of Cellular and Molecular Biology, University of Vermont
[3]Department of Microbiology and Molecular Genetics, University of Vermont

Abstract:
CD8 T-cells are a critical component of adaptive cellular immunity in response to viral infection, representing the primary cytotoxic T-cell subgroup that is responsible for viral clearance. The dynamics of CD8 T-cell populations as they move from naïve to effector to memory subtypes is highly complex, consisting of multiple branching lineage paths governed by a series of tipping points. Agent-based modeling is a computational modeling method that has been effectively used to represent multi-cellular systems and is particularly well suited to characterizing the complexities of population dynamics. Herein we present an initial implementation of the Cellular Immunity Agent-based Model (CIABM) that represents the basic functions of the initial response to viral infection and the role of CD8 effector T-cell function in the face of a viral infection. Simulations of the CIABM demonstrate plausible population trajectories of viral and CD8 T-cells, as well as capturing biological heterogeneity through its incorporation of stochastic processes in the cellular rule sets.

Dynamic Knowledge Representation with Agent-based modeling

Agent-based modeling is a discrete event, object oriented, rule based and often spatially explicit method for dynamic computer modeling that represents systems as a series of interacting components [1-5]. An agent-based model (ABM) is a computer program that generates populations of discrete computational objects (or *agents*) that correspond to the component-level at which the reference system is being examined. These computation agents are organized into *agent classes* representing groupings of agents of a similar type by shared properties and characteristics. Agents are governed by *agent rules,* which are a series of instructions that allow the agent to be treated as an input-output object. ABM rules are often expressed as conditional statements ("if-then" statements), making ABMs an intuitive way for representing mechanisms identified from basic science research. However the general nature of a "rule" allows other types of mathematical or computational models (i.e. differential equation, stochastic or network) to be used as rule systems [5-11]. Individual agents incorporate the properties and rule-structures of their parent agent class, but are able to manifest diverging behavioral paths based on the differing local inputs that are possible through the ABM's spatially heterogeneous simulation environment. This is the key property of ABMs that allows them to behave "realistically," generating population/system level outputs from the heterogeneous behavioral trajectories of individual agents that embody lower-level knowledge and mechanisms. The generation of distributions within population behavior is enhanced by the common practice of adding stochastic components to the agents' rules. This stochasticity may reflect either apparent randomness associated with limitations of measurement, or actual stochastic processes present in the reference system (which may amount to the same thing). Agent-based modeling has been used in

multiple domains, such as ecology [12], social/political science [13], microeconomics [14] and epidemiology [15]. Agent-based modeling has also been increasingly applied to biomedical research, primarily in terms of characterizing multi-cellular interactions, such as in the study of sepsis [16-19] cancer [6, 20-23] cellular trafficking [24-28], host-microbe interactions [29, 30], gastrointestinal biology [31-33] and wound healing [10, 34, 35].

By virtue of their rule-based nature ABMs are an intuitive means of representing the mechanisms and hypotheses present in the biomedical literature, allowing them to serve as dynamic knowledge representations of mechanistic hypotheses [18, 36]. The intrinsic multi-scale nature of ABMs allows researchers to translate putative causal mechanisms into system level phenotypes, an essential function in dealing with the complexity of biological systems. Additionally, the non-proscribed nature of the rules embedded in an ABM, which facilitates the initial development of abstract models and the progressive addition of more detail as it becomes needed, makes agent-based modeling well suited as a scalable modular framework that can evolve with the state of knowledge about a particular system [5, 6, 11, 19, 37]. The advantages of agent-based modeling are most evident when trying to integrate multiple populations of sub-components (such as biological cells) that interact in a highly dynamic fashion.

Methods:

The Cellular Immunity Agent-based Model (CIABM) is intended to be a generalizable model of CD8 T-cell dynamics, designed to represent different disease states resulting from different perturbations (i.e. specific infections of specific pathogens, putative vaccines and their administration strategy). We have developed multiple ABMs related to the immune

response and diseases related to inflammation and immune dysfunction [17, 32, 38-43], and will leverage this experience to integrate various aspects of these models as components of the CIABM. Many of these models are based on a previous model, the Innate Immune Response Agent-based Model (IRRABM) [17]. The IIRABM is an abstract representation/simulation of the human inflammatory signaling network response to injury; the model has been calibrated such that it reproduces the general clinical trajectories seen in sepsis. We have previously extended the IIRABM to include aspects of cellular immunity via the Solid Organ Transplant ABM (SOTABM) [43]; the CIABM is a direct modification of the SOTABM to represent the dynamics of a viral infection. Like the SOTABM, the CIABM does not explicitly represent tissue or organ architecture but instead utilizes an abstract representation of various tissue compartments where different cellular interactions occur, including a lymphoid tissue compartment such that cell-trafficking can be represented. The proto-CIABM is a modification of the SOTABM in the following fashion:

1. Antigen from transplanted tissue has been replaced with viral antigen (Viral-ag).
2. Viral infection occurs by infection and replication within antigen presenting cells (APCs); in the CIABM these are macrophages and dendritic cells.

Description of the Model World for the CIABM

At its current level of abstraction the CIABM does not explicitly represent tissue or organ architecture but instead utilizes an abstract representation of various tissue compartments where different cellular interactions occur. The primary interaction space in the host tissue is

represented by a 2-dimentional square grid where the edges "wrap," making it topologically a torus. Each grid space is populated by an agent representing a generic host tissue cell (self-cell), and populations of immune cells move in a semi-Brownian fashion over this surface. The specific cell types and produced mediators represented in the CIABM are described below. The generalized space of the CIABM has a distinct area in the left upper quadrant of the grid, which is intended to represent the intra-lymph node interaction space in a more spatially defined and limited area. The simulated effects of the cellular-molecular events iterate as the CIABM runs, with one cycle approximating 15 minutes of real-world time.

A schematic of the components, mediators and interactions in the CIABM can be seen in Figure 1. As a general description, the initial components of

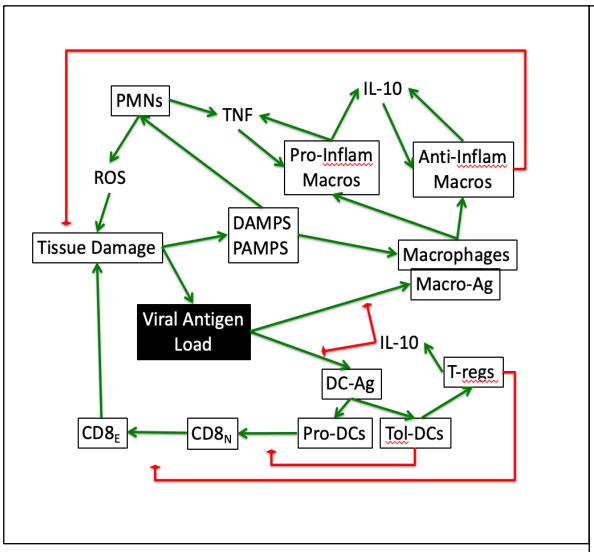

Figure 1: Schematic of Control Structure of the CIABM. Green lines are positive feedback, Red lines are negative feedback. Cell Types: PMNs = Polymorphic Neutrophils, Macros = Macrophages, DC = Dendritic Cell, Pro-DC = Pro-inflammatory Dendritic Cells, Tol-DC = Tolerogenic Dendritic Cells, T_{regs} = T-regulatory cells, $CD8_N$ = Naïve CD8 T-cells, $CD8_E$ = Effector CD8 T-cells. Ag = Antigen, linked to either Macrophages or Dendritic Cells. DAMPS = Damage Associated Molecular Patterns, PAMPS = Pathogen Associated Molecular Patterns, TNF = Tumor Necrosis Factor, ROS = Reactive Oxygen Species, IL-10 = Interleukin-10

the innate immune response represent the end-effector of the system, primarily responsible for interactions influencing tissue damage, microbial killing and abstracted tissue reconstitution. This component incorporates both pro- and anti-inflammatory components, consistent with a self-contained control structure befitting its role as a highly-evolutionarily

conserved, fundamental function of multi-cellular organisms. These cell types are:

Tissue: These cells represent the general tissue of the host, do not move, and occupy each intact grid space of the CIABM at baseline. They contain a life variable, which determines their health state. Damage to the self-cells is reflected by a decrement of the life variable. When damaged beyond a certain threshold (arbitrarily set at <70% health, or < life = 70), the self-cells will produce damage associated molecular pattern molecules (DAMPS) that will activate various inflammatory cells. Tissue can be damaged by bacteria, or by the production of reactive oxygen species (ROS) from immune cells, or directly upon initialization in the sterile tissue injury mode. They are healed primarily by anti-inflammatory macrophage species (Anti-inflam-macros), though also to a lesser degree by pro-inflammatory macrophage species (Pro-inflam-macros).

Viral Antigen Load: Viral infection is simulated abstractly by using placeholder agents representing the presence of infection (virus-present), which themselves have a state variable representing the amount of bacteria present on a single patch (virus-count). Viruses are introduced into the simulation at initialization at varying numbers of initial insult. Viruses do not directly damage Tissue, but rather are consumed by antigen presenting cell sub-types (D-Cs (Dendritic Cells) or macrophages).

Polymorphonuclear Neutrophil Cells (PMNs): These are the most common type of inflammatory cells. They move randomly unless in the presence of their chemotactic triggers (DAMPS and PAMPS). When triggered, they follow the gradients of these molecules to the areas of injury or infection, where they undergo respiratory burst. This results in the production of

reactive oxygen species (r-oxy-s), which kills bacteria and damages normal tissue.

Macrophages (macros): These immune cells move randomly unless in the presence of threshold levels of their chemotactic triggers, a combination of DAMPS/PAMPs and tumor necrosis factor (TNF). They become activated into either a pro- or anti-inflammatory phenotype depending on their milieu. DAMPS, PAMPS, TNF all favor the pro-inflammatory state, while interleukin-10 (IL-10) favors the anti-inflammatory state. Pro-inflammatory activated macrophages (Pro-inflam-macros) will produce both TNF and IL-10 based on their level of stimulation by PAMPS and DAMPS. They will also abstractly perform phagocytosis (by reducing the virus-count of virus-present), and weakly heal normal tissue. Anti-inflammatory activated macrophages (Anti-inflam-macros) will produce IL-10 based on their level of stimulation by PAMPS, DAMPS and TNF; they do not produce TNF. They are the primary healing cells in the CIABM, representing this function abstractly by increasing the life of any self-cells present until they return to normal. Host-macros infected by viruses are able to carry viral-Ag to the lymph node area and convert any naïve CD8 T-cells ($CD8_N$) in the lymph node area to cytotoxic $CD8_E$, which can then kill that infected APC but also damage host Tissue.

Dendritic Cells (DCs, pro-DCs, tol-DCs): These cells function similarly to un-activated macros. If they come into contact with viral Ag, they will pick up the Viral Ag. These activated dendritic cells have two distinct paths: either their default path as pro-inflammatory dendritic cells (pro-DCs) that are able to activate naïve-CD8+ T-cells ($CD8_N$) to their cytotoxic effector form ($CD8_E$) through direct contact, or as tolerogenic dendritic cells (tol-DCs) that directly inhibit the generation of $CD8_E$, as well as activating

regulatory T-cells (T-regs) and producing IL-10. This last function, the production of IL-10, is a negative feedback control mechanism that reduces the ability of DCs to pick up antigen in the first place. The default trajectory of an antigen-activated DC is towards the pro-DC phenotype.

The CIABM also includes an additional layer of control representing cellular immunity with respect to the regulatory role of lymphocytes, primarily T-cell subtypes. While we recognize that there are multiple subtypes of regulatory T-cells (see [44] for an overview), the proto-CIABM abstracts these into the general classes of effector/cytotoxic T-cells and regulatory T-cells as follows:

<u>CD8 T-cell species (naïve $CD8_N$, cytotoxic effector $CD8_E$):</u> These cells are initialized as $CD8_N$ in the left upper quadrant of the proto-CIABM, simulating their baseline existence in lymph tissue. In their naïve form they do not move, but if they are exposed to trafficking macros or DCs that are positive for viral-Ag, then they become activated to cytotoxic $CD8_E$, which can then move toward any viruses. If the come in contact they will kill the viruses but also damage host tissue.

<u>Regulatory T-cells (T-regs).</u> This agent class is used to abstractly aggregate a large set of different subtypes of T-cells (many of which are CD4+, but also includes CD8+ regulatory cells, double negative CD T-cells, among others). While a plethora of these cell types exist, in general, they share many common features:

1. Their production and function are enhanced by IL-10
2. Many produce IL-10
3. They inhibit the generation of, function of and promote the apoptosis of both effector T-cells and non-tolerogenic dendritic cells.

4. They promote the generation and function of tolerogenic dendritic cells.

Therefore, the CIABM aggregates these functions into a single abstract t-regs class. T-regs freely move, reflecting their initial peripheral location. They become activated through interactions with antigen-presenting cells (either host-macros or host-DCs with positive transplant-Ag); once activated they produce IL-10. They are also able to induce apoptosis of antigen presenting cells already activated with viral-Ag.

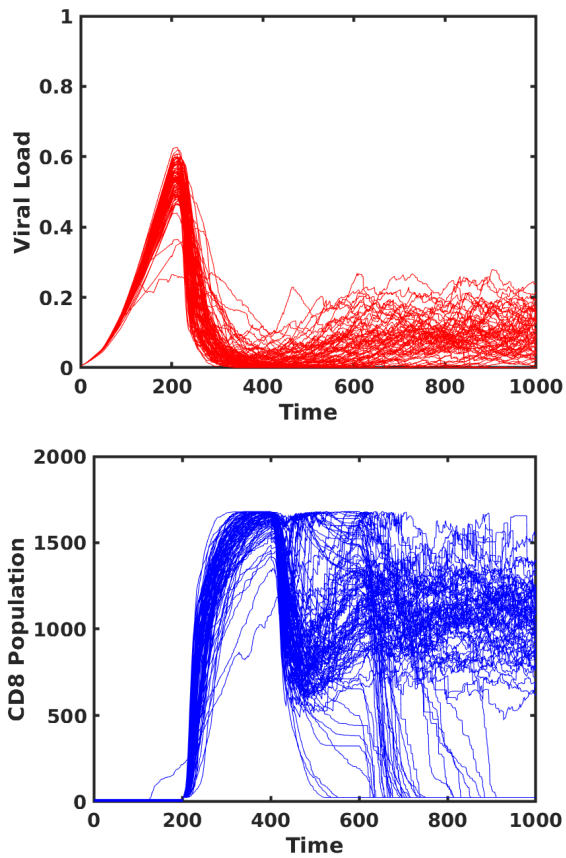

Figure 2: Simulations of response to viral challenge in terms of viremia (upper panel) and CD8 population dynamics (lower panel). Graphs represent n = 100 stochastic replicates, note the variation among trajectories that is consistent with clinical heterogeneity.

Results

Simulations of response to generic viral challenge were able to generate qualitatively plausible viremia/clearance dynamics (see Figure 2). Simulation output of proto-CIABM in response to generic viral challenge (N = 100 stochastic replicates). The upper graph depicts trajectory of viremia, the lower graph depicts levels of CD8 cells. 1 day = 96 time steps. The CIABM reproduces general dynamics of viremia followed by CD8 activity peaking and sustained after decrease of viremia. Note that these simulations do not include

incubation period of virus. Current model conflates $CD8_E$ and $CD8_M$ and therefore death-phase of $CD8_E$ contraction is not seen. Also note heterogeneity of trajectories; this is consistent with biological heterogeneity and is consistent with ABMs being able to represent variable clinical populations.

Discussion

The CIABM is an initial step at developing a framework for examining the dynamics of adaptive cellular immunity in the face of viral challenge, representing a highly abstracted model of the components and processes of the cellular immune response. Despite its abstraction, the CIABM is able to generate the overall dynamics of viral infection, particularly with respect to capturing the temporal relationship between the trajectories of viral load and extent of CD8 T-cell population levels. Future development of the CIABM will involve:

1. Addition of detailed CD8 T-cell subtypes for representation of the transfer from CD_8 effector populations to CD8 memory cells, and then from $CD8_M$ to subgroups of CD8 effector memory, CD8 central memory, and multifunctional CD8 effector with re-expression of CD-45RA (TEMRA cells).
2. Addition of cytokines associated with CD8 lineage differentiation (IL-7, IL15) in addition to cytokines already in the CIABM (TNF, IFN-g, IL-2, IL-4, IL-12) known to influence CD8 lineage dynamics.
3. Addition of abstracted CD4 cell functions.

With the inclusion of greater detail, particularly with respect to the development of cellular memory, the CIABM could potentially be a useful

adjunct to the investigation of mechanisms associated with CD8 lineage dynamics both in wild-type viral infections as well as aiding in better understanding of the cellular immunity component of vaccine development.

References

1. An, G., et al. *Agent-based models in translational systems biology*. Wiley Interdisciplinary Reviews: Systems Biology and Medicine, 2009. DOI: Doi: 10:1002/wsbm.45.
2. Bankes, S.C., *Agent-based modeling: a revolution?* Proc Natl Acad Sci U S A, 2002. **99 Suppl 3**: p. 7199-200.
3. Bonabeau, E., *Agent-based modeling: methods and techniques for simulating human systems.* Proc Natl Acad Sci U S A, 2002. **99 Suppl 3**: p. 7280-7.
4. Hunt, C.A., et al., *At the Biological Modeling and Simulation Frontier.* Pharm Res, 2009.
5. Walker, D.C. and J. Southgate, *The virtual cell -- a candidate co-ordinator for 'middle-out' modeling of biological systems.* Brief Bioinform, 2009. **10**(4): p. 450-461.
6. Zhang, L., C.A. Athale, and T.S. Deisboeck, *Development of a three-dimensional multiscale agent-based tumor model: simulating gene-protein interaction profiles, cell phenotypes and multicellular patterns in brain cancer.* J Theor Biol, 2007. **244**(1): p. 96-107.
7. Santoni, D., M. Pedicini, and F. Castiglione, *Implementation of a regulatory gene network to simulate the TH1/2 differentiation in an agent-based model of hypersensitivity reactions.* Bioinformatics, 2008. **24**(11): p. 1374-1380.
8. Fallahi-Sichani, M., et al., *Multiscale computational modeling reveals a critical role for TNF-alpha receptor 1 dynamics in tuberculosis granuloma formation.* J Immunol, 2011. **186**(6): p. 3472-83.
9. Hoehme, S. and D. Drasdo, *A cell-based simulation software for multi-cellular systems.* Bioinformatics, 2010. **26**(20): p. 2641-2642.
10. Adra, S., et al., *Development of a three dimesional multiscale computational model of the human epidermis.* PLoS ONE, 2010. **5**(1): p. e8511.

11. Christley, S., M.S. Alber, and S.A. Newman, *Patterns of mesenchymal condensation in a multiscale, discrete stochastic model.* PLos Computational Biology, 2007. **3**(4): p. e76.
12. Grimm , V., et al., *Pattern-oriented modeling of agent-based complex systems: Lessons from ecology.* Science, 2005. **310**: p. 987-991.
13. Macy, M. and R. Willer, *From Factors to Actors: Compuational Sociology and Agent-based Modeling.* Annual Review of Sociology, 2002. **28**: p. 143-166.
14. Tesfatsion, L., *Agent-based Computational Economics: Growing Economies from the Bottom Up.* Artificial Life, 2002. **8**(1): p. 55-82.
15. Parker, J. and J. Epstein, *A Distributed Platform for Global-Scale Agent-based Models of Disease Transmission.* ACM Transactions on Modeling and Computer Simulation, 2011. **22**(1): p. 2.
16. An, G., *Agent-based computer simulation and sirs: building a bridge between basic science and clinical trials.* Shock, 2001. **16**(4): p. 266-73.
17. An, G., *In silico experiments of existing and hypothetical cytokine-directed clinical trials using agent-based modeling.* Crit Care Med, 2004. **32**(10): p. 2050-60.
18. Hunt, C.A., et al., *Physiologically based synthetic models of hepatic disposition.* J Pharmacokinet Pharmacodyn, 2006. **33**(6): p. 737-72.
19. An, G., *Introduction of an agent-based multi-scale modular architecture for dynamic knowledge representation of acute inflammation.* Theor Biol Med Model, 2008. **5**(1): p. 11.
20. Mansury, Y., M. Diggory, and T.S. Deisboeck, *Evolutionary game theory in an agent-based brain tumor model: exploring the 'Genotype-Phenotype' link.* J Theor Biol, 2006. **238**(1): p. 146-56.
21. Engelberg, J.A., G.E. Ropella, and C.A. Hunt, *Essential operating principles for tumor spheroid growth.* BMC Syst Biol, 2008. **2**(1): p. 110.
22. Deisboeck, T.S., et al., *Pattern of self-organization in tumour systems: complex growth dynamics in a novel brain tumour spheroid model.* Cell Prolif, 2001. **34**(2): p. 115-34.
23. Chen, S., S. Ganguli, and C.A. Hunt, *An agent-based computational approach for representing aspects of in vitro multi-cellular tumor spheroid growth.* Conf Proc IEEE Eng Med Biol Soc, 2004. **1**: p. 691-4.
24. Thorne, B.C., et al., *Modeling blood vessel growth and leukocyte extravasation in ischemic injury: an integrated agent-based and finite element analysis approach.* J Crit Care, 2006. **21**(4): p. 346.
25. Tang, J., K.F. Ley, and C.A. Hunt, *Dynamics of in silico leukocyte rolling, activation, and adhesion.* BMC Syst Biol, 2007. **1**: p. 14.

26. Tang, J., et al., *Simulating leukocyte-venule interactions--a novel agent-oriented approach.* Conf Proc IEEE Eng Med Biol Soc, 2004. **7**: p. 4978-81.
27. Bailey, A.M., B.C. Thorne, and S.M. Peirce, *Multi-cell agent-based simulation of the microvasculature to study the dynamics of circulating inflammatory cell trafficking.* Ann Biomed Eng, 2007. **35**(6): p. 916-36.
28. Bailey, A.M., et al., *Agent-based model of therapeutic adipose-derived stromal cell trafficking during ischemia predicts ability to roll on P-selectin.* PLoS Comput Biol, 2009. **5**(2): p. e1000294.
29. Peer, X. and G. An, *Agent-based model of fecal microbial transplant effect on bile acid metabolism on suppressing Clostridium difficile infection: an example of agent-based modeling of intestinal bacterial infection.* J Pharmacokinet Pharmacodyn, 2014. **41**(5): p. 493-507.
30. Seal, J.B., et al., *Agent-based dynamic knowledge representation of Pseudomonas aeruginosa virulence activation in the stressed gut: Towards characterizing host-pathogen interactions in gut-derived sepsis.* Theor Biol Med Model, 2011. **8**: p. 33.
31. Wendelsdorf, K.V., et al., *ENteric Immunity SImulator: a tool for in silico study of gastroenteric infections.* IEEE Trans Nanobioscience, 2012. **11**(3): p. 273-88.
32. Cockrell, C., S. Christley, and G. An, *Investigation of inflammation and tissue patterning in the gut using a Spatially Explicit General-purpose Model of Enteric Tissue (SEGMEnT).* PLoS Comput Biol, 2014. **10**(3): p. e1003507.
33. Cockrell, C., et al., *Towards Anatomic Scale Agent-Based Modeling with a massively parallel Spatially Explicit General-purpose Model of Enteric Tissue (SEGMEnT_HPC).* PLoS One, 2015. **In press**.
34. Mi, Q., et al., *Agent-based model of inflammation and wound healing: insights into diabetic foot ulcer pathology and the role of transforming growth factor-beta1.* Wound Repair Regen, 2007. **15**(5): p. 671-82.
35. Walker, D.C., et al., *Agent-based computational modeling of wounded epithelial cell monolayers.* IEEE Trans Nanobioscience, 2004. **3**(3): p. 153-63.
36. An, G., *Dynamic knowledge representation using agent-based modeling: ontology instantiation and verification of conceptual models.* Methods Mol Biol, 2009. **500**: p. 445-68.
37. Kirschner, D.E., et al., *Toward a multiscale model of antigen presentation in immunity.* Immunol Rev, 2007. **216**: p. 93-118.

38. An, G., *Introduction of an agent-based multi-scale modular architecture for dynamic knowledge representation of acute inflammation.* Theoretical Biology and Medical Modelling, 2008. **5**(1): p. 11.
39. An, G. and S. Kulkarni, *An agent-based modeling framework linking inflammation and cancer using evolutionary principles: Description of a generative hierarchy for the hallmarks of cancer and developing a bridge between mechanism and epidemiological data.* Mathematical Biosciences, 2015. **260**: p. 16-24.
40. Kim, M., et al., *Immature oxidative stress management as a unifying principle in the pathogenesis of necrotizing enterocolitis: insights from an agent-based model.* Surgical Infections, 2012. **13**(1): p. 18-32.
41. Seal, J.B., et al., *Agent-based dynamic knowledge representation of Pseudomonas aeruginosa virulence activation in the stressed gut: Towards characterizing host-pathogen interactions in gut-derived sepsis.* Theoretical Biology and Medical Modelling, 2011. **8**(1): p. 33.
42. Gopalakrishnan, V., M. Kim, and G.J.A.i.w.c. An, *Using an agent-based model to examine the role of dynamic bacterial virulence potential in the pathogenesis of surgical site infection.* 2013. **2**(9): p. 510-526.
43. An, G., *Introduction of a framework for dynamic knowledge representation of the control structure of transplant immunology: employing the power of abstraction with a solid organ transplant agent-based model.* Frontiers in Immunology, 2015. **6**: p. 561.
44. Wood, K.J., A. Bushell, and J. Hester, *Regulatory immune cells in transplantation.* Nat Rev Immunol, 2012. **12**(6): p. 417-30.