EVENT-BASED PATTERN DETECTION IN ACTIVE DENDRITES

PREPRINT

Johannes Leugering[*]
Osnabrück University, Germany
jleugeri@uni-osnabrueck.de

Pascal Nieters[*]
Osnabrück University, Germany
pnieters@uni-osnabrueck.de

Gordon Pipa
Osnabrück University, Germany
gpipa@uni-osnabrueck.de

July 2, 2019

ABSTRACT

Many behavioural tasks require an animal to integrate information on a slow timescale that can exceed hundreds of milliseconds. How this is realized by neurons with membrane time constants on the order of tens of milliseconds or less remains an open question. We show, how the interaction of two kinds of events within the dendritic tree, excitatory postsynaptic potentials and locally generated dendritic plateau potentials, can allow a single neuron to detect specific sequences of spiking input on such slow timescales. The morphology of a neuron's dendritic arbor determines which inputs the neuron responds to, which we express formally in terms of a temporal logic. Finally, we extend this model of dendritic computation to homogeneous populations of neurons and illustrate in a simulated navigation task, how it can be used to integrate and retain information on a behaviourally relevant timescale.

1 Introduction

The ability to detect long-lasting sequences of neural activity is crucial for complex behavior, but poses a serious challenge for most established neuron models. Consider a rodent navigating through an environment in search for food. Receptive fields of place and grid cells tile a spatial map of the environment and encode the current position by their respective population activities [1, 2]. But in order to find its way back, the animal needs to know not only its present location, but also which path it took to get there. Decoding this path from the sequential activation of place and grid cells requires the integration of information on behavioural timescales that can span hundreds of milliseconds or more [3]. Relevant patterns on such long timescales may prove to be a ubiquitous phenomenon, and have already been documented for a wide range of sensory processing tasks, such as olfaction [4, 5] or cortical auditory processing [6].

This raises the puzzling question, how such long sequences of neural activity can be processed by volatile neurons with membrane time constants on the timescale of tens of milliseconds or less [7]. While this problem is typically addressed on a network level, e.g. by relying on effects of fast-acting synaptic plasticity [8] or slow emergent dynamics due to recurrent connections [9], we argue that it can be solved on the level of individual neurons by active processes within their dendritic trees.

From experimental neurobiological evidence and theoretical considerations we conclude that:

1. Localized, active dendritic processes endow neurons with internal memory traces on the timescale of hundreds of milliseconds.
2. The interaction of these processes allows the detection of complex and long-lasting temporal patterns.
3. The computation realized by a neuron is determined by the morphology of its dendritic arbor and can be expressed by a temporal logic.
4. Due to stochastic transmission of spikes, populations of neurons can realize a 'fuzzy' *probabilistic* extension of this temporal logic.

[*]Both authors contributed equally.

Taken together, these propositions define a general computational framework for event-based, active dendritic sequence processing (ADSP), which we present here.

Neural dynamics is driven by active dendritic processes

Most of a cortical pyramidal neuron's excitatory synaptic inputs terminate on dendritic spines [10], where post-synaptic ion channels are activated via the stochastic, pre-synaptic release of glutamate-carrying vesicles [11, 12]. The activated channels, primarily controlled by α-amino-3-hydroxy-5-methyl-4-isoxazolepropionic acid receptors (AMPARs) [13], become conductive to a mixture of ions, which leads to a brief depolarization in the corresponding spine, referred to as the *excitatory post-synaptic potential* (EPSP) [14]. These voltage changes in nearby spines induce a modest depolarization in the local dendritic membrane potential [15], which passively propagates along the dendrite as described by neural cable theory. For very specific branching patterns, the passive propagation of activity along a neuron's dendrite can be simplified to an equivalent model of a cylinder, in which the contribution of individual synaptic inputs sum (sub-)linearly [16]. Since propagation along the cylinder is very fast, abstract point-neuron models such as leaky integrate-and-fire neurons ignore the spatial dimension of the dendritic tree entirely and model the neuron as if it were a single electric compartment [17]. However, in this purely passive model of dendritic integration, the attenuation of signals along the dendritic cable is so strong, that synaptic input onto thin apical dendrites should have little, if any, measurable effect on the membrane potential at the soma far away [18].

Recent biological findings therefore suggest that neurons make extensive use of additional, actively generated effects in their dendritic trees [19, 20] that rely on N-methyl-D-asparate receptor (NMDAR) gated ion-channels [13] (**Fig 1 inset**). NMDAR gated channels, like their AMPAR gated counterparts, are activated in the presence of glutamate, but do not become conductive unless a channel-blocking Mg^+ ion is first displaced by a sufficiently strong depolarization [21, 22]. This depolarization can be achieved by the coactivation of multiple AMPAR channels on nearby spines within a short time-window. Experimental as well as simulation studies report that this requires a volley of 4-20 or even up to 50 spikes within 1-4ms, depending on the location along the dendritic tree [15, 23, 24, 25]. The opening of NMDAR channels triggers a massive influx of different ionic currents that lead to a complete depolarization of a small segment of the dendritic arbor. While the isolated NMDAR response itself is reported to last on the order of at least 25ms [26], in vivo recordings reveal that voltage-gated channels in the dendritic membrane [18] prolong this effect, resulting in a depolarization that can last from tens to hundreds of milliseconds [27]. We focus on these longer lasting events, which we collectively refer to as *dendritic plateau potentials*, and argue, that they provide useful memory traces within the dendritic tree that can last hundreds of milliseconds.

The much larger depolarization during a plateau potential propagates further along the dendrite than the weaker effect of individual EPSPs and thus extends the range at which they can (indirectly) contribute to somatic action potential generation [28]. Just like EPSPs, however, plateau potentials are subject to the same attenuation along the dendritic cable and thus have a strong effect only in their direct neighbourhood. This leads to a division of complex dendritic arbors into functional subunits [29, 30, 31], which we here refer to as *dendritic segments*. How local plateau potentials in these segments interact within a dendritic tree depends on its morphology. In particular, the depolarizing effect on other directly connected dendritic segments is effectively raising their resting potential for the whole duration of the plateau potential, thus lowering the amount of coinciding spikes required to initiate a plateau potential there [32]. We show how this local interaction between connected segments leads to cascades of plateau potentials, that allow the detection of long-lasting sequences within the dendritic tree.

Each segment of a dendritic tree tends to receive strongly correlated volleys of spikes on clustered synaptic inputs from some subpopulation of neurons [33, 34]. We propose, that such incoming spike volleys constitute elementary events, and that the morphology of a dendritic arbor can be uniquely associated with a computation that can be expressed in terms of a temporal logic of these events.

Since individual spikes are transmitted unreliably by probabilistic synapses [11, 12], the response of a neuron to a specific pattern of incoming spikes is inherently stochastic, as well. We argue that this stochasticity is beneficial, as it allows a population of homogeneous neurons to become a probabilistic temporal pattern detector, that provides effective input for subsequent neurons.

2 Results

Active dendritic sequence processing realizes event-based neural computation

Conceptually, the complex dynamics of dendritic membrane potentials can be reduced to the interactions of two kinds of events, EPSPs and actively generated plateau potentials, in a tree structure of dendritic segments. Since both of these events result in localized stereotypical effects on the dendritic membrane potential, we abstract them to rectangular

pulses of unit magnitude and fixed duration τ^{syn} and τ^{den}, respectively. The qualitative behaviour of the dendritic arbor can thus be explained purely in terms of the locations and times at which EPSPs and plateau potential are initiated in its dendritic segments.

Only those incoming spikes that are successfully transmitted by the probabilistic synapses induce EPSPs in the postsynaptic segment, which sum up and constitute the total *synaptic input* into the segment. This input is particularly strong when a *volley* of multiple spikes occurs in a time-window short enough for their EPSPs to overlap. In addition to synaptic input, the electric coupling between directly connected dendritic segments provides another source of *dendritic input*.

When both the *synaptic* and *dendritic input* into a segment exceed critical thresholds, the segment enters a prolonged *plateau* state. For the whole duration of the plateau, all other directly connected segments receive modestly depolarizing dendritic input. Segments of the dendritic tree therefore act as coincidence detectors, that respond to highly synchronized volleys of spikes with plateau potentials. The precise thresholds for synaptic and dendritic input depend on the segment's location within the dendritic tree. While a large volley of spikes alone suffices to trigger a plateau in the outermost segments of the dendritic tree, internal segments require the additional dendritic input due to plateau potentials in connected segments. For segments that lie at branching points in the dendritic tree, more than one of their neighbours may have to be in a plateau state concurrently to have a sufficient effect. If the soma, which lies at the root of the dendritic tree, receives sufficient synaptic and dendritic input, a somatic action potential, rather than a plateau potential, is generated.

Since the small effects of EPSPs remain confined to the postsynaptic dendrite segment, they can only affect the neuron's behaviour indirectly by contributing to the generation of local plateau potentials. It is the plateau potentials and their interaction across neighbouring segments, that drives the dendritic membrane potential and therefore implements an event-based framework of dendritic computation on two distinct timescales, that are orders of magnitude apart. On a fast timescale, the combined effect of a volley of coincident spikes can initiate a localized plateau potential. On a much slower timescale, the interaction of these plateaus provides an ephemeral memory of the recent history. A detailed mathematical formalization of this framework is provided in the **Online Methods**, section 4.1.

The interaction between connected dendritic segments facilitates cascades of plateau potentials along the dendritic tree. Starting in a distal segment, a spike volley can initiate a plateau, which then provides dendritic input for another segment. Next, that segment responds to an incoming spike volley with a plateau of its own, in turn providing dendritic input to yet another segment. Whenever such a continuous chain of plateau potentials proceeds all the way to the soma, it culminates in a somatic action potential. This signals to other neurons, that a specific sequence of spike volleys has been detected – on a timescale that may be as long as the number of segments times the plateau duration, i.e. hundreds of milliseconds. (**Fig 1a**)

Crucially, the time intervals between spike volleys are not prescribed exactly, as long as they don't exceed the duration of a plateau potential. This timing-invariance enables the neuron to detect not finely timed patterns of inputs, as could be represented by fixed spatio-temporal receptive fields, but instead any sufficiently fast sequence of volleys received from the correct input populations in the correct order. A single neuron can therefore implement an event-based computation by active dendritic sequence processing.

Sequence detecting neurons implement temporal logic gates

To understand the behaviour of ADSP neurons on an abstract, qualitative level, we identify a neuron's dendritic morphology with the set of sequences it responds to. Like in classical logic, this set can be characterized by an expression composed of propositions and operators.

Consider a neuron that receives clustered input from different populations of neurons. The propositions represent incoming plateau-triggering spike volleys and are labeled by the respective populations that emitted the volleys. The operators represent the constraints imposed on their temporal order. As a trivial example, a neuron composed of a single somatic segment (**Fig. 2.a**), receiving input from some population A, can be expressed by the formula A, indicating that it fires whenever it receives sufficiently strong input from population A. Now consider a neuron with two branches that receive inputs from populations A and B, respectively, and a somatic segment, which receives input from population C. If either branch suffices (**Fig. 2.b**) to allow a somatic input to trigger a spike, the expression becomes $A + B \rightarrow_1 C$, which can be read as "The neuron fires when at least one plateau-triggering input from either population A or population B arrives within the duration of one plateau potential before a spike triggering input arrives from population C". If simultaneous plateaus in both branches are required (**Fig. 2.c**), this leads to the expression $A + B \rightarrow_2 C$, instead.

With more involved dendritic trees, the left-hand-side of these expressions can be nested arbitrarily, resulting in a wide range of operations supported by sequence detecting neurons. Figure **Fig. 2** illustrates this diversity through several

examples of dendritic morphologies and the corresponding logical functions they implement. A precise mathematical definition can be found in section 4.2.

The branching morphology of a dendritic tree therefore determines the computation performed by the neuron, which allows even single neurons to detect quite complex compositions of such sequences.

Homogeneous neural populations implement fuzzy temporal logic gates

The transmission of spikes is stochastic, therefore the individual neuron's response is stochastic, too. Because each synapse can be assumed to transmit or fail independently of all others, the probability, that enough coincident spikes from a volley are transmitted to cross the required threshold and trigger a plateau, increases with the size of that volley. Because the detection of a sequence requires the detection of multiple such volleys by a specific cascade of plateau potentials, the neuron's probability to spike reflects the magnitude of all individual volleys and thus provides a measure of the *signal strength* of the sequence input.

In a population of ADSP neurons, all with the same morphology and receiving input from the same sources, each neuron fires independently with a probability that reflects the signal strength of the input. Since the neurons are driven by the same input signals, those neurons that do fire, fire simultaneously. The signal strength of the sequence input is therefore reflected in the number of coincident spikes emitted by the population. The rate of outgoing spikes from such a population superficially resembles a rate-based population code, but the relative timing of spikes is critical and allows a population to reliably signal the detection of individual events, while reflecting the signal strength in the number of coinciding spike outputs.

Due to the stochastic transmission of spikes, a homogeneous population of neurons thus implements a 'fuzzy' version of temporal logic, where rather than a binary *true* or *false*, a *degree of truth* is conveyed by the magnitude of spike volleys in a coincidence-based code.

Example: Representing movement trajectories

To demonstrate the practical implications of such neuronal sequence detection, we return to the example of a rat navigating an environment. We assume that the rat has an internal representation of its environment, tiled by the receptive fields of distinct populations of place cells. While the animal resides within such a receptive field, the corresponding population emits spike volleys with a magnitude that is largest when the animal is close to the center of the receptive field. Different paths lead the animal through some of these receptive fields in different order, and result in different sequences of spike volleys.

At first, consider an individual neuron with three dendritic segments, arranged in a single chain, that receives input from one of these populations on each segment (**Fig 3**). It emits a spike if first the distal, then the middle and finally the somatic segment are each activated through a volley of sufficiently many spikes, and thus detects mostly those paths that traverse the corresponding receptive fields in the specified order. Whether or not each plateau is initiated depends on the magnitude of the incoming spike volleys and is thus a function of distance to the receptive field centers. A path that closely follows along the desired receptive field centers is therefore more likely to be detected than a path along the periphery. Since only the identity and order of the volleys matter, rather than precise timing, the neuron detects the same path regardless of the animal's movement speed.

Now consider a small population of just ten of the same sequence detecting neurons as above (**Fig 4**). Due to the stochastic transmission of incoming spikes, each neuron independently fires in response to different paths with a probability that reflects the signal strength of the inputs. This endows the population with a coincidence-based output code, which can not just represent, whether or not the animal followed a certain path, but also encode in the magnitude of emitted spike volleys, how closely the path followed along the receptive field centers. Just like the place cell populations realize tuning curves over possible locations, the sequence detecting population thus realizes a tuning curve over possible paths, that allows the animal to infer not just its current location, but also the path that got it there. Furthermore, a single neuron can only respond to sequences at a rate limited by the long duration of plateau potentials, whereas in a population, different neurons can concurrently process different input sequences, allowing the population to respond to recurring stimuli at a correspondingly higher rate.

3 Discussion

In this study we showed, how the active generation and interaction of plateau potentials turns a single neuron's dendritic tree into a temporal logic gate, capable of detecting specific sequences of input on a timescale of hundreds of milliseconds – an order of magnitude larger than commonly observed membrane time constants [35]. This naturally

transferred to populations of neurons, where the stochastic transmission of spikes leads to a probabilistic extension of this temporal logic.

The proposed mechanism of active dendritic sequence processing implements a distributed computation through actively generated events confined to dendritic segments, which interact due to the passive propagation of membrane potentials along the dendritic cable. This distinguishes it from other approaches like integrate-and-fire-type point-neuron models that use the same mechanism of passive propagation to model the linear integration of synaptically induced EPSPs throughout the entire dendritic tree. While both of these perspectives are complementary, we focused exclusively on active dendritic processes. These allow neurons to integrate sequential information on much slower and variable timescales and thus provides a potential solution for a long-standing problem of theoretical neuroscience [36] that eludes simpler point-neuron models [37].

The direct experimental verification of the active dendritic sequence processing model is challenging, as it requires multiple simultaneous measurements of synaptic input and local membrane potentials along a single neuron's dendrite on a fine temporal and spatial resolution. Since ADSP neurons are driven by incoming spike volleys from multiple intact neuron populations, these measurements will likely have to be carried out *in vivo* and the identification of the involved patterns of temporal spike volleys may require newly developed statistical techniques [38, 39].

If biological neurons indeed leverage these remarkable properties of active dendrites, this has far-reaching implications and requires a fundamentally different perspective on the computational capabilities of individual neurons. The increased expressive power of ADSP neurons appears to be critical for various more complex feats of neural computation, e.g. orientation selectivity [40] or the detection of spatio-temporal patterns [41]. While we focus our discussion of the ADSP model on cortical pyramidal neurons, we expect the same general mechanism to occur in different neuron types throughout the brain, as well. For example, Purkinje cells in the cerebellum also generate localized Ca^{2+} events in response to coincident input on individual dendritic segments [42, 43], and thalamocortical neurons respond to strong synaptic input by localized plateaus in distal dendritic branches [44]. This indicates that the underlying mechanism, possibly implemented through diverse means, may be very general and ubiquitous in the brain.

We therefore conclude that even artificial neural networks in soft- and hardware can make good use of the ADSP neuron model, since this event-based model of dendritic computation provides an elegant solution to the problem of sequential pattern detection across multiple, dynamically varying timescales, and can be implemented efficiently by a wide range of possible substrates.

4 Methods

4.1 Formal description of the event-based framework for computation in active dendrites

Mathematically, we approximate both EPSPs and plateau potentials by rectangular pulses with fixed duration τ^{syn} and τ^{den}, respectively. The dynamics of each dendritic segment can then be fully described in terms of the arrival times of incoming spikes as well as the times at which plateau potentials were initiated within the segment itself or in other electrically connected segments. For some segment i, the synaptic input X_i and the dendritic input Y_i take the form of equations (1) and (2), respectively

$$X_i(t) = \sum_{j \in S_i} \sum_k \chi_{i,j,k} \cdot \mathbf{1}_{[s_k^j, s_k^j + \tau^{\text{syn}}]}(t) \quad \text{where } \chi_{i,j,k} \sim \text{Bernoulli}(\omega_{i,j}) \tag{1}$$

$$Y_i(t) = \sum_{j \in D_i} \sum_k \mathbf{1}_{[t_k^j, t_k^j + \tau^{\text{den}}]}(t) \tag{2}$$

$$t_{m+1}^i = \min \left\{ t \in \mathbb{R} \;\middle|\; t \geq t_m^i + \tau^{\text{den}}, X_i(t) \geq \theta_i^{\text{syn}} \text{ and } Y_i(t) \geq \theta_i^{\text{den}} \right\}, \tag{3}$$

where $\mathbf{1}_{[a,b]}$ represents a unit pulse during the time interval $[a, b]$, and s_k^j and t_j^i are the times of spikes arriving from some presynaptic neuron j and the plateau onset times on segment i, respectively. The random variable $\chi_{i,j,k}$ represents the independent probabilistic transmission of every spike k from source j via a synapse to dendritic segment i, where the transmission occurs with the synapse specific probability $\omega_{i,j}$. The sets S_i and D_i respectively identify the segment's synaptic connections to other neurons and which other dendritic segments it is electrically coupled to, and therefore reflect the morphology of the neuron's dendritic tree. Equation (3) defines, that, if the segment is not in a plateau state already, a new plateau is initiated as soon as both synaptic and dendritic inputs exceed their respective thresholds θ_i^{syn} and θ_i^{den}.

4.2 Formalizing sequence detection into a temporal logic

In order for a neuron to fire a spike, a cascade of dendritic plateaus must be activated through sufficiently strong volleys of synaptic input in a temporal order determined by the branching morphology of the neuron's dendritic tree. If the effect of incoming spike volleys on the corresponding postsynaptic membrane potentials is known, the neuron's behaviour is fully determined by whether or not the sequence in which they arrive satisfies the constraints imposed by the morphology. These timing constraints can be expressed in a form of temporal logic, which captures the temporal relationship between *events*. In this context, each occurrence of an event represent the triggering of a plateau in some dendritic segment, which then lasts for a fixed duration τ^{den}. Each occurrence of an event can be understood as a tuple (χ, t) that translates to the proposition that "χ has occurred at time t". All times t at which some event χ occurs are collected in the corresponding set T_χ.

Consider a neuron that receives synaptic input from a set $\mathcal{A}$ of neuron populations, each of which is represented by an uppercase letter. If some distal segment within the neuron's dendritic tree requires only synaptic input from a population $A \in \mathcal{A}$, then a plateau occurs in that segment whenever population A produces a sufficiently strong volley of spikes. We represent this trivial event by A, as well, and it occurs whenever the corresponding spike volley occurs. Within the dendritic tree, the generation of plateaus additionally requires prior activation of other directly connected segments, and the corresponding events are therefore represented by more complex expressions. The event $\sum_{i \in I} \chi_i \rightarrow_k \psi$ represents, that at least k events $\chi_i, i \in I$ have occurred no more than one plateau duration τ before the event ψ occurred at a time $t_\psi \in T_\psi$. The set I determines, which events must have occurred prior to ψ, and thus reflects, which other dendritic segments the segment associated with event ψ is electrically coupled to. This new event is then defined to occur at time t_ψ, as well, and can be verbalized as "within this specific branch, a sufficiently strong volley of spikes from population ψ at time t_ψ can trigger a plateau, if it arrives while at least k other connected branches are concurrently in a plateau, already". Formally, this can be expressed as follows:

$$\sum_{i \in I} \chi_i \rightarrow_k \psi \text{ occurs at time } t_\psi \quad \Longleftrightarrow \quad t_\psi \in T_\psi \wedge \exists J \subseteq I : |J| \geq k \wedge \forall j \in J \exists t \in T_{\chi_j} : t_\psi - \tau^{den} \leq t \leq t_\psi$$

These derived events are left-recursive and can be nested arbitrarily. The resulting set of possible expressions can be formalized by a language with alphabet $\mathcal{A}$, and the following formal grammar, where S is the start symbol and $x \in \mathcal{A}$ and $n \in \mathbb{N}$ are terminal symbols:

$$\begin{aligned} &S \Rightarrow x \\ &S \Rightarrow (P \rightarrow_n x) \\ &P \Rightarrow S \\ &P \Rightarrow P + S \end{aligned}$$

Each expression of this form uniquely corresponds to a dendritic morphology. Since the synaptic inputs into the neuron are transmitted stochastically, not every spike volley of the same magnitude has the same postsynaptic effect. Whether or not an individual neuron fires in response to an input sequence of spike volleys can therefore be understood as a deterministic function of a stochastically perturbed version of that input sequence. A homogeneous population of neurons thus realizes a probabilistic or fuzzy extension of this temporal logic.

4.3 Implementation of the navigation experiments

To simulate the stochastic movements of a rat, random paths are generated with time-varying location $l(t) = (X(t), Y(t)) \in \mathbb{R}^2$ as solutions of the following system of stochastic differential equations:

$$\begin{aligned} dX &= \cos(2\pi A) V dt \\ dY &= \sin(2\pi A) V dt \\ dA &= 0.5 dW_A \\ dV &= 10.0(0.25 - V)dt + 0.1 dW_V \end{aligned}$$

Here, A represents the angular heading of the animal, V represents its velocity in $\frac{m}{s}$ and the W_A, W_V represent independent standard Brownian motion processes. Each path is generated with a randomized initial position within a

rectangular domain of $10cm \times 9.5cm$, a random angular heading and a random velocity according to the marginal stationary distribution of V in the equation above and is simulated for a fixed duration of $300ms$.

Seven populations of place cells, each 20 neurons strong, tile the central part of the environment in a hexagonal grid with center-to-center distance of $\sim 2.9cm$. Each population randomly emits spike volleys following a homogeneous Poisson process with rate $\lambda = 20Hz$. Additionally, each neuron in the population emits random spikes at a rate of $10Hz$ to emulate background activity. Each spike is transmitted with probability 0.5. The magnitude of each spike volley is determined by the population's mean activity at the time, which depends on the animal's location within the environment through a receptive field tuning curve. The tuning curves model the probability of each individual neuron within the population to participate in a given spike volley by the bell-curves $f_i(x) = \exp(-\frac{x-\mu_i}{2\sigma^2})$ with coefficient $\sigma = 9.7mm$, centered on the tiles of the hexagonal grid. The total number of spikes emitted during a volley from population i at time t is therefore a random variable distributed according to a Binomial distribution with population size $n = 20$ and probability $p = f_i(l(t))$.

Each of a simulated neuron's segments receives spiking input from the 20 neurons of one population. A random path is considered to be accepted by the neuron, if the neuron responds with a spike at any point in time during the corresponding simulation run.

The first neuron (see figure 3) is composed of three segments connected sequentially, each of which receives input from one place cell population. It is configured such that the segment furthest from the soma requires coincident input from five or more of its 20 synaptic inputs to elicit a plateau, whereas all other segments require the additional depolarization due to a plateau in their upstream neighbour. The population presented in figure 4 is composed of 10 neurons with the same morphology as in the previous example. Three additional neurons are simulated to read out a coincidence-based code from the population. Each of these readout neurons receives input from all 10 neurons within the population onto a single dendritic segment and requires either 1, 4 or 8 coincident spikes to fire.

5 Code availability

All simulations are implemented in a customly developed package in the Julia programming language [45], publicly available via the code repository hosted at https://github.com/jleugeri/ADSP.jl. Further documentation of the simulator and implementation details can be found there.

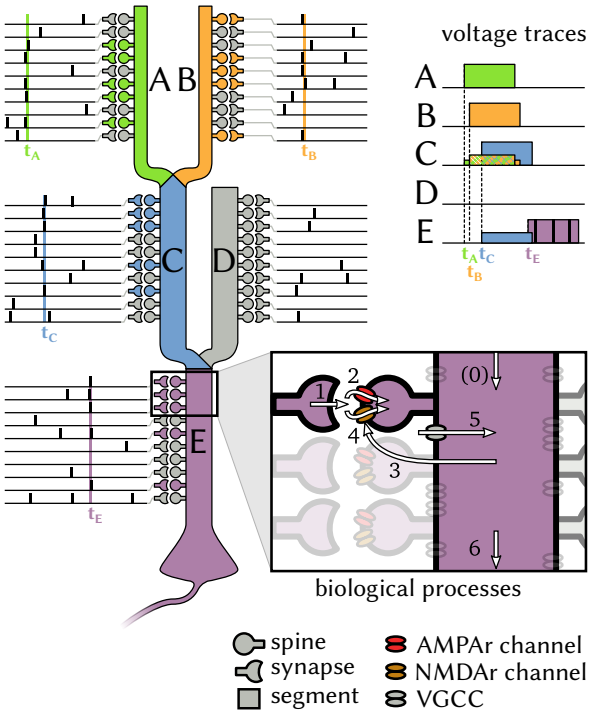

Figure 1: Schematic representation of a complex dendritic tree and its function. A neuron, schematically illustrated on the left, receives on each of its 5 dendritic segments 10 synaptic connections from a corresponding neural population. Sufficiently many coincident spikes (here ≥ 6 out of 10) from population A can lead the corresponding dendritic segment to generate a plateau potential. Similarly, coincident spikes from population B can induce a plateau in a parallel branch. A third segment requires simultaneous input from both of these segments in addition to coincident synaptic input from population C, in order to fire a plateau of its own. On another branch, a fourth segment receives its input from population D. Triggering a somatic spike requires coincident synaptic input from population E during dendritic input from either of its two upstream segments. In this example, a spike is elicited at time t_E (see top right) after a sequence starting with activation of population A at time t_A, followed promptly by population B at time t_B, C at time t_C and finally E at time t_E. Activity from population D was not required here. The inset shows the steps involved in the generation of a plateau: Potentially, the membrane potential in the dendritic segment is already elevated due to a plateau potential in a neighbouring segment (0). Presynaptic input arrives at a synapse (1), which leads to a postsynaptic EPSP via AMPAr mediated ion channels (2). Once the local membrane potential is sufficiently depolarized due to coincident EPSPs and prior depolarization, voltage gated, NMDAr mediated ion channels open, causing additional depolarization (4) which can be further facilitated by the opening of voltage gated calcium channels (5). This strong depolarization initiates a longer lasting plateau potential in the dendritic segment, which has a modest depolarizing effect on other neighbouring segments (6).

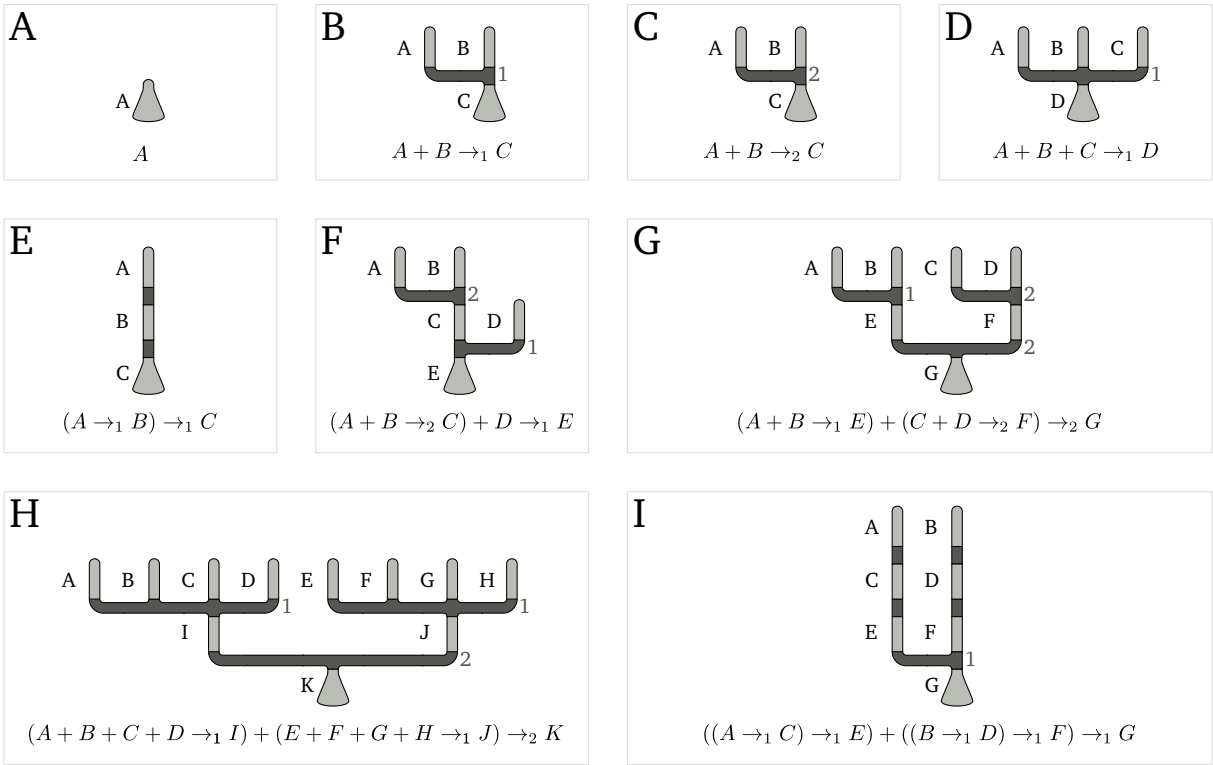

Figure 2: Dendritic morphologies and the temporal logic expression they represent. Neurons with different morphology receive input from one population indicated by a capital letter on each segment. **(A)** shows a coincidence detecting point-neuron, that fires whenever the corresponding population A sends a sufficiently strong volley. **(B)** - **(D)** show an 'or' condition between two branches, an 'and' condition between two branches and an 'or' condition between three branches respectively. **(E)** shows a sequence detector as in **Fig. 3**. **(F)** shows how the schematic in **Fig. 1** translates to a logical expression. **(G)** - **(I)** illustrate how diverse branching can realize complex functionality.

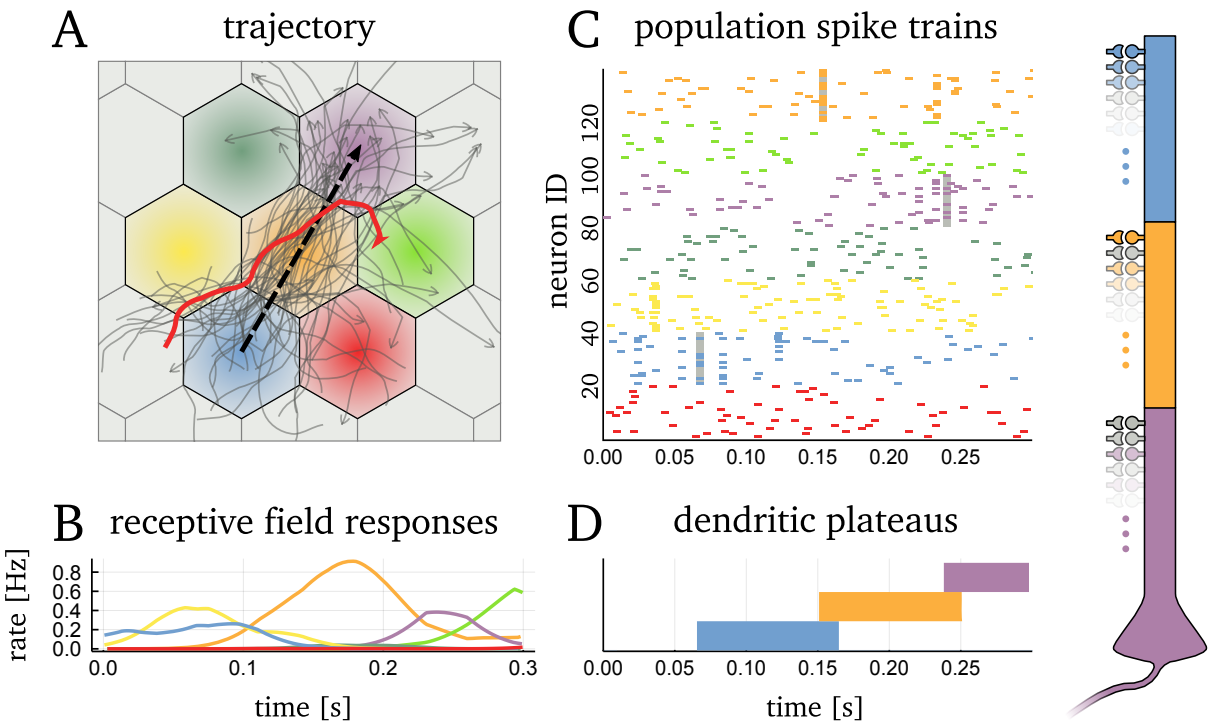

Figure 3: A simple neuron can detect directed paths on a timescale of $300ms$. **(A)** The receptive fields of place cell populations tile the environment through which the animal moves in a hexagonal grid. Random trajectories are generated through a stochastic process with randomized initial positions, velocities and angular heading to simulate the animal's movements. The dashed black line represents the ideal path the neuron should detect, the actual paths detected by the neuron are shown in grey and red. **(B)** While the animal follows the red trajectory through space, the response of the place cell populations' tuning curves show the sequential activation of the populations over the $300ms$ duration of the simulation run. **(C)** The spike trains emitted by the place cell populations (color coded) contain spike volleys that trigger a cascade of overlapping dendritic plateaus **(D)** that results in a somatic spike. The dendritic morphology here is a simple of chain of three dendritic segments, each of which receives the 20 spiking inputs from the blue, orange and purple place cell population, respectively. Within each segment, 5 coincident spike inputs must occur within 5ms to trigger a dendritic plateau.

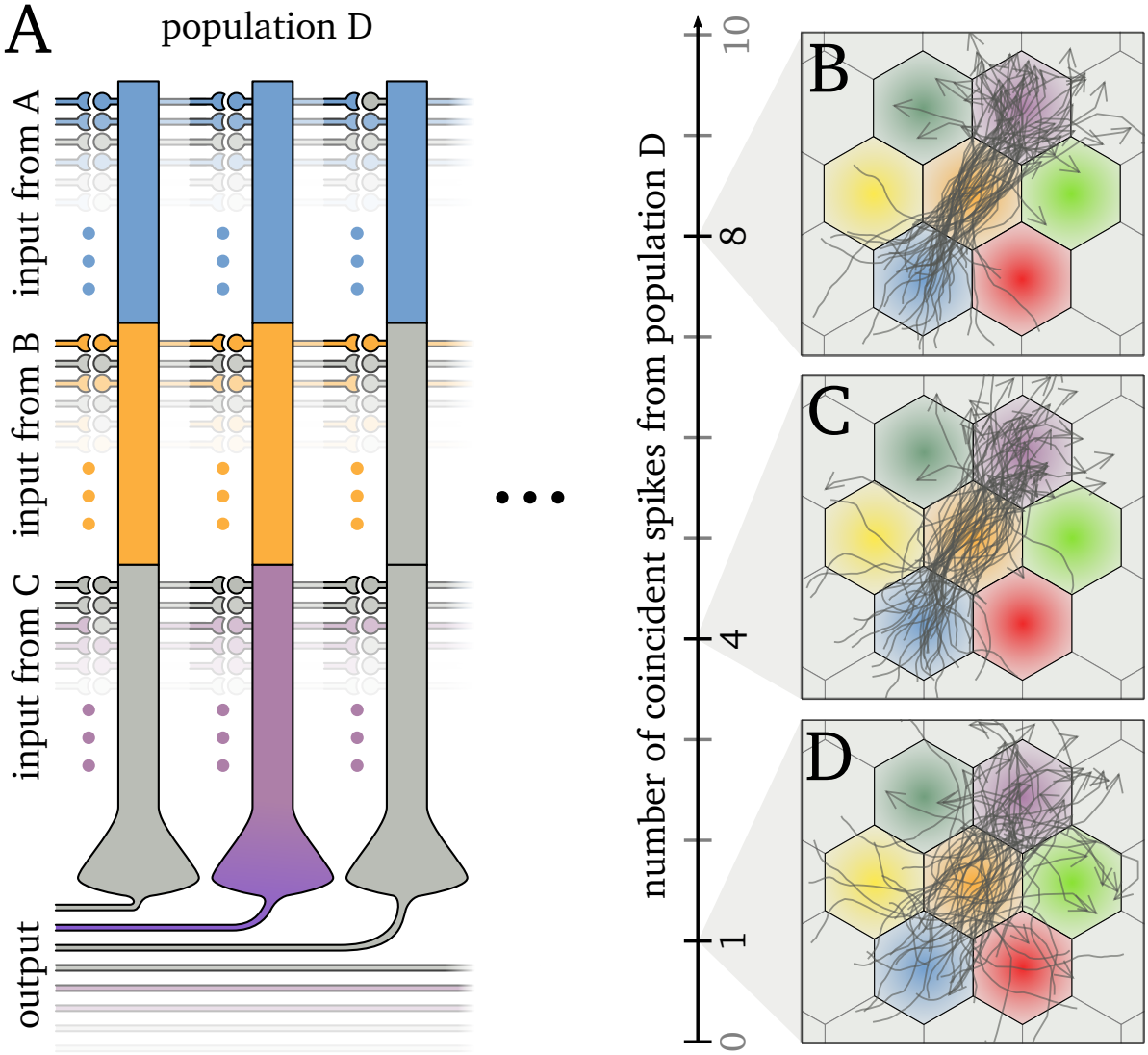

Figure 4: Ensemble activity encodes similarity between desired and observed sequence. **(A)** A population of 10 homogeneous neurons form an ensemble. For all neurons, the morphology and input is the same as in figure 3, but the output differs due to stochastic transmission of spikes at synapses. **(B)** When eight out of ten neurons fire in response to an input sequence, the animal likely took a path through the middle of each population's receptive field in the correct order. **(C)** Four out of ten coincident spikes still indicate a preference for upwards-right movement, but can result from other paths, as well. **(D)** A very wide range of paths activate at least one neuron in an ensemble of ten.

References

[1] J O'Keefe and J Dostrovsky. The hippocampus as a spatial map. preliminary evidence from unit activity in the freely-moving rat. *Brain Res.*, 34(1):171–175, November 1971.

[2] Torkel Hafting, Marianne Fyhn, Sturla Molden, May-Britt Moser, and Edvard I Moser. Microstructure of a spatial map in the entorhinal cortex. *Nature*, 436(7052):801–806, August 2005.

[3] Martin Stemmler, Alexander Mathis, and Andreas V M Herz. Connecting multiple spatial scales to decode the population activity of grid cells. *Sci Adv*, 1(11):e1500816, December 2015.

[4] Brice Bathellier, Derek L Buhl, Riccardo Accolla, and Alan Carleton. Dynamic ensemble odor coding in the mammalian olfactory bulb: sensory information at different timescales. *Neuron*, 57(4):586–598, February 2008.

[5] Bede M Broome, Vivek Jayaraman, and Gilles Laurent. Encoding and decoding of overlapping odor sequences. *Neuron*, 51(4):467–482, August 2006.

[6] Huan Luo and David Poeppel. Phase patterns of neuronal responses reliably discriminate speech in human auditory cortex. *Neuron*, 54(6):1001–1010, June 2007.

[7] Ofer Melamed, Wulfram Gerstner, Wolfgang Maass, Misha Tsodyks, and Henry Markram. Coding and learning of behavioral sequences. *Trends Neurosci.*, 27(1):11–4; discussion 14–5, January 2004.

[8] Gianluigi Mongillo, Omri Barak, and Misha Tsodyks. Synaptic theory of working memory. *Science*, 319(5869):1543–1546, March 2008.

[9] Yulia Sandamirskaya and Gregor Schöner. An embodied account of serial order: how instabilities drive sequence generation. *Neural Netw.*, 23(10):1164–1179, December 2010.

[10] C Beaulieu and M Colonnier. A laminar analysis of the number of round-asymmetrical and flat-symmetrical synapses on spines, dendritic trunks, and cell bodies in area 17 of the cat. *J. Comp. Neurol.*, 231(2):180–189, January 1985.

[11] Katz. *The Release of Neural Transmitter Substances (The Sherrington Lectures)*. Liverpool University Press, December 1969.

[12] C F Stevens. Quantal release of neurotransmitter and long-term potentiation. *Cell*, 72 Suppl:55–63, January 1993.

[13] Michael Hollmann and Stephen Heinemann. Cloned glutamate receptors. November 2003.

[14] JC Watkins and RH Evans. Excitatory amino acid transmitters. *Annual review of pharmacology and toxicology*, 21(1):165–204, 1981.

[15] Attila Losonczy and Jeffrey C Magee. Integrative properties of radial oblique dendrites in hippocampal CA1 pyramidal neurons. *Neuron*, 50(2):291–307, April 2006.

[16] W Rall. Electrophysiology of a dendritic neuron model. *Biophys. J.*, 2(2 Pt 2):145–167, March 1962.

[17] A N Burkitt. A review of the integrate-and-fire neuron model: I. homogeneous synaptic input. *Biol. Cybern.*, 95(1):1–19, July 2006.

[18] Nelson Spruston. Pyramidal neurons: dendritic structure and synaptic integration. *Nat. Rev. Neurosci.*, 9(3):206–221, March 2008.

[19] Srdjan D Antic, Wen-Liang Zhou, Anna R Moore, Shaina M Short, and Katerina D Ikonomu. The decade of the dendritic NMDA spike. *J. Neurosci. Res.*, 88(14):2991–3001, November 2010.

[20] Katerina D Oikonomou, Mandakini B Singh, Enas V Sterjanaj, and Srdjan D Antic. Spiny neurons of amygdala, striatum, and cortex use dendritic plateau potentials to detect network UP states. *Front. Cell. Neurosci.*, 8:292, September 2014.

[21] H Monyer, N Burnashev, D J Laurie, B Sakmann, and P H Seeburg. Developmental and regional expression in the rat brain and functional properties of four NMDA receptors. *Neuron*, 12(3):529–540, March 1994.

[22] T Götz, U Kraushaar, J Geiger, J Lübke, T Berger, and P Jonas. Functional properties of AMPA and NMDA receptors expressed in identified types of basal ganglia neurons. *J. Neurosci.*, 17(1):204–215, January 1997.

[23] Sonia Gasparini, Michele Migliore, and Jeffrey C Magee. On the initiation and propagation of dendritic spikes in CA1 pyramidal neurons. *J. Neurosci.*, 24(49):11046–11056, December 2004.

[24] Sonia Gasparini and Jeffrey C Magee. State-dependent dendritic computation in hippocampal CA1 pyramidal neurons. *J. Neurosci.*, 26(7):2088–2100, February 2006.

[25] Jacopo Bono and Claudia Clopath. Modeling somatic and dendritic spike mediated plasticity at the single neuron and network level. *Nat. Commun.*, 8(1):706, September 2017.

[26] Paul Rhodes. The properties and implications of NMDA spikes in neocortical pyramidal cells. *J. Neurosci.*, 26(25):6704–6715, June 2006.

[27] Guy Major, Matthew E Larkum, and Jackie Schiller. Active properties of neocortical pyramidal neuron dendrites. *Annu. Rev. Neurosci.*, 36:1–24, July 2013.

[28] Tim Jarsky, Alex Roxin, William L Kath, and Nelson Spruston. Conditional dendritic spike propagation following distal synaptic activation of hippocampal CA1 pyramidal neurons. *Nat. Neurosci.*, 8(12):1667–1676, December 2005.

[29] C Koch, T Poggio, and V Torre. Retinal ganglion cells: a functional interpretation of dendritic morphology. *Philos. Trans. R. Soc. Lond. B Biol. Sci.*, 298(1090):227–263, July 1982.

[30] Alon Polsky, Bartlett W Mel, and Jackie Schiller. Computational subunits in thin dendrites of pyramidal cells. *Nat. Neurosci.*, 7(6):621–627, June 2004.

[31] Tiago Branco and Michael Häusser. The single dendritic branch as a fundamental functional unit in the nervous system. *Curr. Opin. Neurobiol.*, 20(4):494–502, August 2010.

[32] Guy Major, Alon Polsky, Winfried Denk, Jackie Schiller, and David W Tank. Spatiotemporally graded NMDA spike/plateau potentials in basal dendrites of neocortical pyramidal neurons. *J. Neurophysiol.*, 99(5):2584–2601, May 2008.

[33] Matthew E Larkum and Thomas Nevian. Synaptic clustering by dendritic signalling mechanisms. *Curr. Opin. Neurobiol.*, 18(3):321–331, June 2008.

[34] Naoya Takahashi, Kazuo Kitamura, Naoki Matsuo, Mark Mayford, Masanobu Kano, Norio Matsuki, and Yuji Ikegaya. Locally synchronized synaptic inputs. *Science*, 335(6066):353–356, January 2012.

[35] Debora Ledergerber and Matthew Evan Larkum. Properties of layer 6 pyramidal neuron apical dendrites. *Journal of Neuroscience*, 30(39):13031–13044, 2010.

[36] Karl Spencer Lashley. *The problem of serial order in behavior*, volume 21. Bobbs-Merrill, 1951.

[37] J A Fodor and Z W Pylyshyn. Connectionism and cognitive architecture: a critical analysis. *Cognition*, 28(1-2):3–71, March 1988.

[38] Rory G Townsend and Pulin Gong. Detection and analysis of spatiotemporal patterns in brain activity. *PLoS Comput. Biol.*, 14(12):e1006643, December 2018.

[39] Min Song, Minseok Kang, Hyeonsu Lee, Yong Jeong, and Se-Bum Paik. Classification of spatiotemporal neural activity patterns in brain imaging data. *Sci. Rep.*, 8(1):8231, May 2018.

[40] Hongbo Jia, Nathalie L Rochefort, Xiaowei Chen, and Arthur Konnerth. Dendritic organization of sensory input to cortical neurons in vivo. *Nature*, 464(7293):1307–1312, April 2010.

[41] Michael London and Michael Häusser. Dendritic computation. *Annu. Rev. Neurosci.*, 28:503–532, 2005.

[42] Yunliang Zang, Stéphane Dieudonné, and Erik De Schutter. Voltage- and Branch-Specific climbing fiber responses in purkinje cells. *Cell Rep.*, 24(6):1536–1549, August 2018.

[43] CF Ekerot and O Oscarsson. Prolonged depolarization elicited in purkinje cell dendrites by climbing fibre impulses in the cat. *The Journal of physiology*, 318(1):207–221, 1981.

[44] Sigita Augustinaite, Bernd Kuhn, Paul Johannes Helm, and Paul Heggelund. NMDA spike/plateau potentials in dendrites of thalamocortical neurons. *J. Neurosci.*, 34(33):10892–10905, August 2014.

[45] Jeff Bezanson, Alan Edelman, Stefan Karpinski, and Viral B Shah. Julia: A fresh approach to numerical computing. *SIAM review*, 59(1):65–98, 2017.