Heterogeneity in human hippocampal CaMKII transcripts reveals an allosteric role for the hub domain in activity regulation

Roman Sloutsky*[1], Noelle Dziedzic*[1,2], Matthew J. Dunn[1], Rachel M. Bates[1], Ana P. Torres-Ocampo[1,2], Brendan Page[1], John G. Weeks[1], Margaret M. Stratton[1]

Department of Biochemistry and Molecular Biology[1], Molecular and Cellular Biology Graduate Program[2], University of Massachusetts, Amherst, United States

*These authors contributed equally

ABSTRACT

Ca^{2+}-calmodulin dependent protein kinase II (CaMKII) plays a central role in Ca^{2+} signaling throughout the body. Specifically in the hippocampus, CaMKII is required for learning and memory. CaMKII is encoded by four highly conserved genes in vertebrates: α, β, γ, and δ. All CaMKIIs are comprised of a kinase domain, regulatory segment, variable linker region, and hub domain responsible for oligomerization. The four genes differ primarily in linker length and composition due to extensive alternative splicing. Numerous questions regarding these splice variants still remain, starting with the fundamental question of which variants are expressed and how splicing affects CaMKII regulation. Here, we unambiguously report the heterogeneity of CaMKII transcripts in a complex sample of human hippocampus using Illumina sequencing. Our results show that hippocampal neurons contain a diverse collection of 56 CaMKII transcripts from all four CaMKII genes, including 25 that have not been previously annotated. We characterized the Ca^{2+}/CaM sensitivity of hippocampal CaMKII variants spanning a broad range of linker lengths and compositions. We demonstrate that the effect of the variable linker on Ca^{2+}/CaM sensitivity is conditional on kinase and hub domains. Moreover, we reveal a novel role for the hub domain as an allosteric regulator of kinase activity, which may provide a new pharmacological target for modulating CaMKII activity. Taken together, we propose that Ca^{2+}/CaM sensitivity in CaMKII is gene-dependent and includes significant contributions from the hub. Our sequencing approach combined with biochemistry provides new insights into understanding the complex pool of endogenous CaMKII.

INTRODUCTION

Ca^{2+}/calmodulin dependent protein kinase II (CaMKII) is a crucial oligomeric Ser/Thr kinase in long-term memory formation (1) as well as egg activation in fertilization (2,3), and cardiac pacemaking (4). CaMKII is expressed throughout the human body, which facilitates its role in these disparate functions. There are four human genes that encode CaMKII: CaMKIIα and β (predominantly in brain), CaMKIIδ (predominant in heart) and CaMKIIγ (multiple organ systems, including egg and sperm) (5-7). In all four genes, each CaMKII subunit is comprised of a kinase domain, regulatory segment, variable linker region, and a hub domain (Fig. 1A). The kinase and hub domains of all four genes are highly conserved with minimum 90% and 75% pairwise identity, respectively. The linker that connects the kinase and hub domains is highly variable in length and composition due to alternative splicing. Herein, we focus on CaMKII in the hippocampus, which comprises the primary memory center in the brain (8). CaMKII is the most

abundant enzyme in neuronal dendrites and has been implicated functionally in memory (1). Transgenic mice deficient in neuronal CaMKII have limited long-term memory and display specific learning impairments (9,10). More specifically, mice with mutations at critical phosphorylation sites in CaMKII display defects in higher order memory and adaptive learning (11).

The structure and function of both the kinase and hub domains of CaMKII have been well studied. Kinase activity is controlled by the autoinhibitory regulatory segment, which blocks the substrate-binding site in the absence of Ca^{2+} (12). When Ca^{2+} levels rise, Ca^{2+} bound calmodulin (Ca^{2+}/CaM) competitively binds to the regulatory segment and relieves inhibition by exposing the substrate-binding site (Fig. 1B) (13). The regulatory segment also houses three sites of autophosphorylation: Thr286, Thr305, Thr306 (following CaMKIIα numbering) (14). Notably, phosphorylation at Thr286 results in autonomous activation, or, sustained activity in the absence of Ca^{2+} (15). The hub domain oligomerizes the holoenzyme into both dodecameric and tetradecameric assemblies (Fig. 1C) (16-18).

The variable linker region has been difficult to study for several reasons. The sequence of the linker is predicted to be disordered. It is likely for this reason that high-resolution structures of the CaMKII holoenzyme including the linker region have not been solved. Indeed, the only atomic resolution structure of a CaMKII holoenzyme is one in which the variable linker is completely deleted (19). In this structure, the regulatory segment makes extensive contacts with the hub domain, thereby completely sequestering the CaM binding segment from Ca^{2+}/CaM in this compact conformation. This structure, combined with biochemical data discussed below, led to the hypothesis that linker length may tune the autoinhibition within the holoenzyme by either stabilizing a compact conformation (short linker forms) or populating an extended conformation where the CaM binding segment is more accessible (longer linker forms).

The variable linker also varies in composition between the four CaMKII genes. Further complexity is generated from alternative splicing up to 9 exons (ex 13-21) in each linker, creating a total of more than 50 variants possibly expressed from four genes (Fig. 2A). The combination of high identity within the conserved kinase and hub domains and high variability in the linker region makes it difficult to specifically identify splice variants of paralogs in cellular experiments.

There have been many studies that outline specific roles for exons in the variable linker region, which provide some clues as to why exons may be spliced in or out. Exon 15, which is encoded in all genes with the exception of CaMKIIβ has been documented to contain a nuclear localization sequence (NLS) (20-22). This NLS (KKRK) is a common motif identified as a sufficient sequence to achieve nuclear localization (23). Exon 13, which is encoded in CaMKIIβ and γ, but not α or δ, mediates an important interaction with F-actin (24,25). In dendritic spines, CaMKII interacting with actin is crucial for the maintenance of spine structure during long-term potentiation (26). Perhaps the most dramatic form of alternative splicing results in the formation of alpha CaMKII associated protein (alpha KAP) where CaMKIIα is spliced to a form

that includes only the hub domain (27). This splice variant plays an important role in membrane anchoring using its hydrophobic N-terminal domain (28). Finally, it was recently shown that alternative splicing within the hub might regulate oligomerization (5). Roles for the remaining exons have yet to be delineated.

In addition to roles assigned to specific exons, the variable linker region has also been shown to play a critical role in CaMKII activation. A standard metric for CaMKII activity is the concentration of Ca^{2+}/CaM required for half-maximal activation (EC_{50} value) (19,29). It has also been clearly shown that CaMKII activation is cooperative (29). In regard to linker length, a CaMKIIα variant with a 30-residue linker has been shown to require significantly less Ca^{2+}/CaM to achieve maximal activity compared to a CaMKIIα variant with a 0-residue linker (19). This general trend is also true when comparing a long linker CaMKIIβ variant to a short linker CaMKIIα variant (30).

Here, we address the gaps in knowledge in two major areas: 1) which specific CaMKII splice variants are expressed in human hippocampal cells, and 2) how CaMKII activation is regulated within the holoenzyme structure for other CaMKII genes.

RESULTS

The exon architecture is conserved between CaMKII paralogs

The four genes encoding CaMKII in humans share a high degree of homology. Using the Neighbor Joining method (31,32), we created reconstructions of the kinase and hub domain divergence for the four human CaMKII genes rooted with *D. melanogaster* CaMKII kinase and hub outgroups (Fig. 1D). Because of the clear one-to-one correspondence of exons across genes, we employ a common exon numbering system (Fig. 2A). Herein, we implement a new naming scheme for CaMKII variants based on gene identity and incorporated exons (Fig. 2C). Moving forward, we propose this is the simplest way to efficiently catalog current CaMKII variants and include new variants as they are discovered.

Deep sequencing reveals at least 56 CaMKII transcript variants in human hippocampus

We used Illumina sequencing to unambiguously determine the CaMKII transcripts present in a human hippocampus sample.

Strategy of amplification and detection of specific CaMKII variants

In order to identify all alternatively spliced CaMKII transcripts expressed in a human total RNA sample, these transcripts must be dramatically enriched. Similar to earlier approaches (1,3,(33-35), we reverse-transcribed human hippocampal RNA to generate cDNA and then used gene-specific primer pairs to PCR-amplify variable regions of CaMKII transcripts (Fig. 2B). Agarose gel separation of PCR amplicons followed by Sanger sequencing of excised gel bands was inadequate for detailed characterization of alternative CaMKII splicing, because many bands contained mixtures of variants. To circumvent this issue, we devised an Illumina next-generation sequencing approach. Given the locations at which CaMKII transcripts are variably spliced and the maximal lengths of variable regions when all optional exons are incorporated, strategic placement of a primer pair facilitates PCR-based construction of Illumina sequencing

libraries such that a 251bp paired-end sequencing strategy allows unambiguous identification of virtually all possible CaMKII transcripts from all four genes (Fig. 2B, blue/green primer pair). Compared to traditional whole-transcriptome Illumina RNA-Seq library preparation, this approach emphasizes sensitivity of variant detection over accuracy in quantification of relative transcript abundance, due to the greater potential for amplification bias resulting from additional PCR cycles. Therefore, we will not discuss transcript abundance, except to say that each identified variant is supported by far too many reads (50 or more) to be attributable to sequencing errors.

Analysis of Illumina sequencing

We detected a surprisingly large number of distinct transcript variants (Fig. 2C, Supplement 1, 2), including 3 variants of CaMKIIα, 24 of CaMKIIβ, 17 of CaMKIIγ, and 12 of CaMKIIδ. In addition to variants previously annotated in genomic databases (NCBI Consensus CDS collection, NCBI GenBank, Ensembl), we also identified numerous previously unobserved variants of each gene, which we refer to as novel in this manuscript. One novel variant of note was the CaMKIIα transcript including no optional linker exons (0 aa linker). This is significant because the crystal structure of CaMKIIα no-linker variant is the only available structure of full length CaMKII (PDB: 3SOA (19)), but this variant was previously not known to be biologically relevant.

Nearly every identified transcript incorporating optional linker exons contained exons 14 and 18, suggesting these two exons constitute a "core" linker predating the divergence of the four genes. Assuming the core is mandatory if any other linker exons are to be spliced in, we observed a large fraction of allowable linker sequences for each gene. CaMKIIβ variants incorporating proline-rich exons 19, 20, or 21 and CaMKIIγ variants incorporating F-actin-interacting exon 13, which were not detected in our experiment, are two notable exceptions.

The variable linker affects activation of CaMKIIα, but not CaMKIIβ

We focused on the activation properties of CaMKIIα and β variants because of their well-documented involvement in learning and memory (9,11). First, we determined the EC_{50} values for Ca^{2+}/CaM activation of all three CaMKIIα variants sequenced from human hippocampus. For all EC_{50} measurements, the curve fit is shown in Figure 3 for simplicity, and fits with all data points used are shown in Supplement 3. For brevity we refer to variants by linker length: α-41 (α14,15,18 in Fig. 2C), α-30 (α14,18), and α-0 (α-no-linker). In agreement with previous experiments comparing α-30 to α-0 (19), we also observed a significant right-shift in the EC_{50} value (from 24 nM to 313 nM, respectively, Fig. 3A). CaMKIIα-41 (EC_{50} = 25 nM, Fig. 3A) did not show a significant difference compared to α-30.

Next, we examined CaMKIIβ variants with the broadest possible range of variable linker lengths: previously annotated and detected variants β-93, β-69, β-68, β-54, β-30, and β-0, as well as the annotated, but undetected, variant β-217 (Figure 3B). Quite surprisingly, we observed no significant differences in EC_{50} across the entire range of linker lengths, with EC_{50} of all β variants falling in the narrow range between 14-31 nM. This result shows that the variable linker does not tune activation the same way in different CaMKII genes.

The hill coefficients (n_H) from these measurements of CaMKIIα and β variants were all quite similar, ranging from 1.5 to 2.5, which is consistent with previous measurements (19). Of note, the cooperativity in CaMKIIβ variants is consistently higher compared to CaMKIIα, but does not correlate with EC_{50} value differences.

We observed a 15-fold difference in the EC_{50} for Ca^{2+}/CaM between α-0 and β-0 (313 nM vs 21 nM). The difference in activation properties of these two variants must be determined by sequence differences outside of the variable linker: in the kinase domain, the hub domain, or a combination of the two. In fact, the only CaMKIIβ variant we tested with an EC_{50} outside of the narrow range around 20 nM was the novel variant β-93-short-hub, which is slightly right-shifted from the other CaMKIIβ variants (Fig. 3B). The only difference between β-93 (25 nM EC_{50}) and β-93-short-hub (43 nM EC_{50}) are 26 residues missing in the hub domain, indicating that hub alone may affect activation properties. These results motivated our next experiments.

The hub is dominant to the kinase and variable linker in determining activation properties

We directly assessed the regulatory contribution of the kinase and hub domains of CaMKIIα and β (90% and 77% identity, respectively). To do this, we created two chimeras with 0aa linkers. The first chimera is the CaMKIIα kinase domain fused to the CaMKIIβ hub domain, and the second chimera is the CaMKIIβ kinase domain fused to the CaMKIIα hub domain. The EC_{50} value of the β kinase/α hub chimera was significantly right-shifted compared to that of the α kinase/β hub chimera (Fig. 3C). Both CaMKIIβ-0 and the chimera with the β hub have roughly the same EC_{50} (24 nM and 21 nM, respectively). On the other hand, CaMKIIα-0 and the chimera with the α hub are both right-shifted. However, the EC_{50} of the chimera is still 3-fold lower than the EC_{50} of wild type CaMKIIα-0: 102 nM vs 313 nM. This suggests that the role of the hub domain in determining activation properties is dominant with respect to the kinase domain, with no contribution from the kinase in the context of β hub, but a significant contribution in the context of α hub.

Activation properties track with evolutionary divergence

We compared the divergence of human CaMKII kinase and hub domains using the corresponding domains from the single CaMKII gene in fly as outgroup to root the trees (Fig. 1D). The kinase and hub trees have consistent topologies, in which the common ancestor of CaMKIIα and δ diverged from the common ancestor of β and γ. However, while the four kinase domains diverged in nearly a star topology (the segments separating the α/δ and β/γ ancestors from their common ancestor are much shorter than any other segment), hub divergence was not nearly as uniform. CaMKIIα and δ are much more diverged from each other and from β/γ. CaMKIIβ and γ hubs have diverged by far the least, with the fewest substitutions between them. Based on this similarity, and the apparent involvement of the hub domain in activation, we hypothesized that γ-0 would behave similarly to β-0. We measured activation of γ-0 and δ-0 (Fig. 3C), confirming our hypothesis (γ-0: EC_{50} = 28 nM). Consistent with the order in which α, β/γ, and δ split, as well as with the greater degree of divergence between α and δ hubs, δ-0

required an intermediate amount of Ca^{2+}/CaM for activation (EC_{50} = 167 nM): roughly 7-fold higher than β-0, but 2-fold lower than α-0.

DISCUSSION

For the first time, we unambiguously determined at least 56 CaMKII transcripts present in a human hippocampal sample using Illumina sequencing. Using these sequences, and others previously annotated from various tissues, we asked what are the differences in regulation between CaMKII genes and splice variants. We discovered that while CaMKIIα regulation is dependent on the variable linker region, CaMKIIβ is not. Further, we now show a novel role for the hub domain in the regulation of CaMKII activation by Ca^{2+}/CaM. Our data provide important insights into the heterogeneity of CaMKII transcripts in a human tissue and also implicate a new role for the hub domain in regulating CaMKII activity through an allosteric mechanism. This finding opens a new window to allosteric control of CaMKII activity through modulation of the hub domain.

We sequenced a significant number of transcripts from all four CaMKII genes. Notably, CaMKIIα produced a no-linker transcript (CaMKIIα-0) that accounted for over 3% of mapped reads. This sequence was previously crystallized to obtain the only full-length atomic resolution structure of CaMKII. Our data demonstrate the potential physiological relevance of the compact conformation observed in that structure (19). The sheer number of detected variants in hippocampal neurons (56 across the four CaMKII genes) suggests that either splicing is not tightly regulated at every exon, or, conversely, there are complex mechanisms of regulation.

In terms of abundance of transcripts we detected, PCR bias is unlikely to be solely responsible for the roughly 1000-fold differences between the most- and least- frequently observed variants of CaMKIIβ, γ, and δ. This suggests that some variants are deliberately up-regulated relative to others. Furthermore, we did not detect even a single read mapping to some of the previously annotated variants (for instance CaMKIIβ variants incorporating exon 19, 20, or 21, and CaMKIIγ variants containing exon 13). This suggests that some variants are specifically down-regulated.

We found that agarose gel separation of transcripts followed by Sanger sequencing of individual bands cannot resolve CaMKII variants from hippocampus (Supplement 4). This is because sequencing traces from most bands clearly indicated a mixture of templates present in the sequenced sample. In many cases, careful analysis of the Sanger sequencing trace allowed us to identify at least two distinct splice variants. Therefore, it is difficult to interpret the presence or absence of an expected gel band as indicative of the presence or absence of a particular CaMKII transcript in a sample. Since each Illumina read obtained by our approach reflects a single template molecule, it produces a significantly more robust survey of the CaMKII transcripts. We suggest that this approach should be applied to other tissues to begin to catalog the diversity in CaMKII transcripts. We expect that in other tissues the identity and relative abundance of transcripts will vary from those we observed in the hippocampus. With this information in hand, we will certainly improve our understanding of the regulation of

alternative splicing, and ultimately be able to link this regulation to the biological needs within each tissue.

Finally, our results comparing the EC_{50} values between CaMKIIα and β splice variants show that the regulation of CaMKII activation is gene-dependent and significantly affected by the sequence of hub domain. The variable linker in CaMKIIα does play a significant role in regulating CaMKIIα activity, which is consistent with previous work (19). We used cartoon holoenzymes in Figure 3 to illustrate the compact and extended autoinhibited states of CaMKII, which correspond to lower and higher sensitivities to Ca^{2+}/CaM. For CaMKIIα, these cartoons are based on a crystal structure (PDB: 3SOA) and SAXS measurements, respectively (19). Surprisingly, the variable linker in CaMKIIβ does not play a significant role in regulating CaMKIIβ activity. Using these EC_{50} measurements, we have described CaMKII activation at fixed Ca^{2+}/CaM concentrations. CaMKII activity is also dependent on the frequency of Ca^{2+} delivered (19,30,36). Future experiments will be needed to carefully dissect this kinetic contribution in different splice variants.

Our results with CaMKIIα and β chimeras provide evidence that the hub is the primary determinant of sensitivity to Ca^{2+}/CaM. Analysis of the CaMKIIα holoenzyme crystal structure shows that the substituted residues comparing CaMKIIα and β hub domains are distributed fairly evenly throughout the domain (Fig. 4A). None of these substitutions are found at the interface between the hub and regulatory segment, which would be clear to interpret. The extreme C-terminus does vary slightly from gene to gene (SVLPH in CaMKIIα), which may be implicated in oligomerization effects (Fig. 4B). Taken together, we hypothesize that this effect of the hub on kinase activity is based on dynamics; where breathing motions or stability within the hub domain allosterically regulates the accessibility of the calmodulin-binding segment. Further experiments will be needed to fully elucidate this complex mechanism.

MATERIALS AND METHODS

Initial amplification of transcript variable regions

cDNA was reverse-transcribed from a commercially purchased human hippocampal RNA sample (BioChain) using the ProtoScript II first strand cDNA synthesis kit (NEB #E6560) with oligo dT priming. Variable regions of transcripts were PCR-amplified for 35 cycles using high-specificity primer pairs designed to minimize cross-hybridization between CaMKII genes and Phusion polymerase (NEB #M0530). This yielded a mixed population of variable-length amplicons reflecting the splice variants of the targeted gene present in the RNA sample.

Construction of Illumina Sequencing Libraries

Illumina sequencing libraries were prepared from the initial variable-length amplicon pools using an adapted PCR-based construction protocol (37). Briefly: first, gene-specific primers with overhangs containing Illumina-specified sequences (Figure 2B) were used to sub-amplify transcript variable regions. Second, generic primers annealing to the overhangs introduced in the first reaction were used to incorporate annealing sites for Illumina sequencing primers, NEBNext (NEB #E7335) library indices, and P5/P7 flow cell annealing sequences. The resulting

amplicons were agarose gel-purified with size selection based on the theoretical minimal and maximal lengths of the variable region inserts.

Analysis of Illumina Sequencing

Illumina reads were grouped by sequence similarity, producing clusters with >90% sequence identity and two or fewer base pair insertions/deletions. The consensus sequence of each cluster was aligned to exon sequences from the corresponding CaMKII gene obtained from the reference human genome (GRCh38.p12, Ensembl release 95) in order to map exon order in the transcript represented by the cluster. Over 90% of reads from each Illumina library could be clustered and unambiguously mapped with reference exons. We consider these "mappable" reads. Python2 code implementing read clustering and exon mapping is available upon request.

Expression plasmid construction

Full-length CaMKII variants were cloned into a pET vector containing N-terminal 6xHis followed by a SUMO tag.

CaMKII chimeras were constructed as follows. The kinase/regulatory segment and hub domains of CaMKIIα and CaMKIIβ were amplified from full-length constructs. The kinase domain includes the regulatory segment of its corresponding kinase. Each domain was amplified with a 20 bps overhang that was the corresponding CaMKII gene. The chimeras were assembled using the Gibson assembly technique.

Protein expression and purification

All CaMKII variants used for this experiment were recombinantly expressed and purified according to (38). Plasmids encoding CaMKII variants were co-transformed with lambda phosphatase into Rosetta 2(DE3)pLysS competent cells (Millipore). Expression was induced overnight with 1mM Isopropyl β-D-1-thiogalactopyranoside (IPTG) and cultures were grown overnight at 18°C. Cell pellets were resuspended in Buffer A (25 mM Tris-HCl pH 8.5, 150mM KCl, 50mM Imidazole, 10% glycerol) with 25mM Magnesium chloride, containing a cocktail of protease inhibitors and DNAse (AEBSF 0.2 mM, Leupeptin 0.005 mM, 1ug/mL Pepstatin, 1ug/mL Aprotinin, 0.1 mg/mL Trypsin Inhibitor, 0.5 mM Benzamidine, 1ug/mL DNAse) and lysed. All subsequent purification steps were performed using an Äkta pure chromatography system at 4°C. Clarified lysate was loaded onto a 5 mL HisTrap FF NiNTA Sepharose column (GE), and eluted with a combination of 50% Buffer A and 50% Buffer B (25mM Tris-HCl pH 8.5, 150mM KCl, 1M imidazole, 10% glycerol) for a final concentration of 0.5 M imidazole. The protein was desalted of residual imidazole using a HiPrep 26/10 Desalting column, and His SUMO tags were cleaved with Ulp1 protease overnight at 4°C in Buffer C (25mM Tris-HCl pH 8.5, 150mM KCl, 2mM TCEP, 50mM Imidazole, 10% glycerol). Cleaved tags were separated by a subtractive NiNTA step. Next, an anion exchange step was done using a 5 mL HiTrap Q-FF and protein was eluted with a KCl gradient. Eluted proteins were concentrated and further purified in gel filtration buffer (25mM Tris-HCl pH 8.0, 150mM KCl, 1mM TCEP, 10% glycerol) using a Superose 6 Increase 10/300 size exclusion column (GE). Pure fractions were then concentrated, aliquoted, flash frozen in liquid nitrogen and stored at -80°C until further use.

Calmodulin (*Gallus gallus*) was recombinantly expressed from a pET-15b vector (generous gift from Angus Nairn) in BL21(DE3) cells (Millipore) and purified as previously described (Putkey and Waxham, 1996). To quantify the calmodulin concentration for making stocks to use in the kinase assays, we used circular dichroism on a Jasco J-1500 Spectrophotometer to make a measurement in triplicate for our purified sample scanning a wavelength spectrum between 250-215 nm to measure the characteristic wavelength of 222 nm according to (39).

Equation used to calculate calmodulin concentration:
[CaM] (mM) =(1000*(mdeg at 222 nm sample - mdeg at 222 nm blank))/(ϴ*ℓ*(# amino acids))
ℓ=path length, ϴ=molar ellipticity

$$[\text{calmodulin}](\text{nM}) = \frac{1000 \times (CD_{sample}^{222nm} - CD_{blank}^{222nm})}{\Theta \times l \times \text{number of amino acids}}$$

where circular dichroism at 222 nm (CD^{222nm}) is expressed in mdeg, Θ is the molar ellipticity, and l is the path length in cm.

Coupled kinase assays
Kinase activity was monitored with previously described conditions (Barker et al. 1995; Chao et al. 2010) using a Synergy H1 microplate reader (Biotek). The addition of calmodulin (concentrations ranging from 0 nM-2 μM) to the reaction was used to initiate CaMKII activity, after which absorbance was measured at 15 second intervals for 10 minutes. The change in absorbance over the course of the resulting time series of measurements was fit with a straight line (y = mx + c) to obtain a slope (m) proportional to the kinetic rate of the reaction. For each time series, slopes were fit to a sliding window of 5 points (1 minute 15 seconds) and the maximum observed slope was used to represent the kinetic rate of that reaction. Kinetic rates across a series of calmodulin concentrations were fit with the following equation:

$$Y = Y_{min} + \frac{(Y_{max} - Y_{min}) \cdot X^{n_H}}{X^{n_H} + {EC_{50}}^{n_H}}$$

to obtain EC_{50} (defined as the calmodulin concentration needed to reach half the maximal reaction velocity) and cooperativity values (Hill coefficients, n_H). 95% confidence intervals for fit parameters (EC_{50} and n_H) were determined using the following bootstrap procedure. 10,000 replicate calmodulin concentration series were generated by randomly selecting one observed kinetic rate at each measured calmodulin concentration from the set of replicates for that variant. Each generated concentration series was fit with the equation above. Parameter values at the 2.5th and 97.5th quantiles of the 10,000 fits were taken as the boundaries of the 95% confidence interval.

Acknowledgements
We thank Luke Chao, Florian Heyd and Andreas Franz for helpful discussions on data and the manuscript. We also thank Peter Chien, Eric Strieter, Scott Garman for helpful discussions.

REFERENCES

1. Lin, Y. C., and Redmond, L. (2009) Neuronal CaMKII acts as a structural kinase. *Communicative & integrative biology* **2**, 40-41
2. Escoffier, J., Lee, H. C., Yassine, S., Zouari, R., Martinez, G., Karaouzene, T., Coutton, C., Kherraf, Z. E., Halouani, L., Triki, C., Nef, S., Thierry-Mieg, N., Savinov, S. N., Fissore, R., Ray, P. F., and Arnoult, C. (2016) Homozygous mutation of PLCZ1 leads to defective human oocyte activation and infertility that is not rescued by the WW-binding protein PAWP. *Hum Mol Genet* **25**, 878-891
3. Yoon, S. Y., Jellerette, T., Salicioni, A. M., Lee, H. C., Yoo, M. S., Coward, K., Parrington, J., Grow, D., Cibelli, J. B., Visconti, P. E., Mager, J., and Fissore, R. A. (2008) Human sperm devoid of PLC, zeta 1 fail to induce Ca(2+) release and are unable to initiate the first step of embryo development. *The Journal of clinical investigation* **118**, 3671-3681
4. Backs, J., Backs, T., Neef, S., Kreusser, M. M., Lehmann, L. H., Patrick, D. M., Grueter, C. E., Qi, X., Richardson, J. A., Hill, J. A., Katus, H. A., Bassel-Duby, R., Maier, L. S., and Olson, E. N. (2009) The delta isoform of CaM kinase II is required for pathological cardiac hypertrophy and remodeling after pressure overload. *Proc Natl Acad Sci U S A* **106**, 2342-2347
5. Cook, S. G., Bourke, A. M., O'Leary, H., Zaegel, V., Lasda, E., Mize-Berge, J., Quillinan, N., Tucker, C. L., Coultrap, S. J., Herson, P. S., and Bayer, K. U. (2018) Analysis of the CaMKII alpha and beta splice-variant distribution among brain regions reveals isoform-specific differences in holoenzyme formation. *Sci Rep-Uk* **8**
6. Maier, L. S., and Bers, D. M. (2002) Calcium, calmodulin, and calcium-calmodulin kinase II: heartbeat to heartbeat and beyond. *Journal of molecular and cellular cardiology* **34**, 919-939
7. Tombes, R. M., Faison, M. O., and Turbeville, J. M. (2003) Organization and evolution of multifunctional Ca(2+)/CaM-dependent protein kinase genes. *Gene* **322**, 17-31
8. Lisman, J., Yasuda, R., and Raghavachari, S. (2012) Mechanisms of CaMKII action in long-term potentiation. *Nat Rev Neurosci* **13**, 169-182
9. Silva, A. J., Paylor, R., Wehner, J. M., and Tonegawa, S. (1992) Impaired spatial learning in alpha-calcium-calmodulin kinase II mutant mice. *Science* **257**, 206-211
10. Bachstetter, A. D., Webster, S. J., Tu, T., Goulding, D. S., Haiech, J., Watterson, D. M., and Van Eldik, L. J. (2014) Generation and behavior characterization of CaMKIIbeta knockout mice. *PloS one* **9**, e105191
11. Giese, K. P., Fedorov, N. B., Filipkowski, R. K., and Silva, A. J. (1998) Autophosphorylation at Thr286 of the alpha calcium-calmodulin kinase II in LTP and learning. *Science* **279**, 870-873
12. Hanson, P. I., and Schulman, H. (1992) Inhibitory autophosphorylation of multifunctional Ca2+/calmodulin-dependent protein kinase analyzed by site-directed mutagenesis. *J Biol Chem* **267**, 17216-17224
13. Rellos, P., Pike, A. C., Niesen, F. H., Salah, E., Lee, W. H., von Delft, F., and Knapp, S. (2010) Structure of the CaMKIIdelta/calmodulin complex reveals the molecular mechanism of CaMKII kinase activation. *PLoS Biol* **8**, e1000426
14. Patton, B. L., Miller, S. G., and Kennedy, M. B. (1990) Activation of type II calcium/calmodulin-dependent protein kinase by Ca2+/calmodulin is inhibited by

autophosphorylation of threonine within the calmodulin-binding domain. *J Biol Chem* **265**, 11204-11212
15. Meyer, T., Hanson, P. I., Stryer, L., and Schulman, H. (1992) Calmodulin trapping by calcium-calmodulin-dependent protein kinase. *Science* **256**, 1199-1202
16. Bhattacharyya, M., Stratton, M. M., Going, C. C., McSpadden, E. D., Huang, Y., Susa, A. C., Elleman, A., Cao, Y. M., Pappireddi, N., Burkhardt, P., Gee, C. L., Barros, T., Schulman, H., Williams, E. R., and Kuriyan, J. (2016) Molecular mechanism of activation-triggered subunit exchange in Ca/calmodulin-dependent protein kinase II. *eLife* **5**
17. Rosenberg, O. S., Deindl, S., Comolli, L. R., Hoelz, A., Downing, K. H., Nairn, A. C., and Kuriyan, J. (2006) Oligomerization states of the association domain and the holoenyzme of Ca2+/CaM kinase II. *FEBS J* **273**, 682-694
18. Myers, J. B., Zaegel, V., Coultrap, S. J., Miller, A. P., Bayer, K. U., and Reichow, S. L. (2017) The CaMKII holoenzyme structure in activation-competent conformations. *Nat Commun* **8**, 15742
19. Chao, L. H., Stratton, M. M., Lee, I. H., Rosenberg, O. S., Levitz, J., Mandell, D. J., Kortemme, T., Groves, J. T., Schulman, H., and Kuriyan, J. (2011) A mechanism for tunable autoinhibition in the structure of a human Ca2+/calmodulin- dependent kinase II holoenzyme. *Cell* **146**, 732-745
20. Ma, H., Groth, R. D., Cohen, S. M., Emery, J. F., Li, B., Hoedt, E., Zhang, G., Neubert, T. A., and Tsien, R. W. (2014) gammaCaMKII shuttles Ca(2)(+)/CaM to the nucleus to trigger CREB phosphorylation and gene expression. *Cell* **159**, 281-294
21. Brocke, L., Srinivasan, M., and Schulman, H. (1995) Developmental and Regional Expression of Multifunctional Ca2+/Calmodulin-Dependent Protein-Kinase Isoforms in Rat-Brain. *Journal of Neuroscience* **15**, 6797-6808
22. Heist, E. K., Srinivasan, M., and Schulman, H. (1998) Phosphorylation at the nuclear localization signal of Ca2+/calmodulin-dependent protein kinase II blocks its nuclear targeting. *Journal of Biological Chemistry* **273**, 19763-19771
23. Kalderon, D., Roberts, B. L., Richardson, W. D., and Smith, A. E. (1984) A short amino acid sequence able to specify nuclear location. *Cell* **39**, 499-509
24. O'Leary, H., Lasda, E., and Bayer, K. U. (2006) CaMKIIbeta association with the actin cytoskeleton is regulated by alternative splicing. *Mol Biol Cell* **17**, 4656-4665
25. Khan, S., Downing, K. H., and Molloy, J. E. (2019) Architectural Dynamics of CaMKII-Actin Networks. *Biophysical Journal* **116**, 104-119
26. Okamoto, K., Narayanan, R., Lee, S. H., Murata, K., and Hayashi, Y. (2007) The role of CaMKII as an F-actin-bundling protein crucial for maintenance of dendritic spine structure. *Proc Natl Acad Sci U S A* **104**, 6418-6423
27. Bayer, K. U., Lohler, J., and Harbers, K. (1996) An alternative, nonkinase product of the brain-specifically expressed Ca2+/calmodulin-dependent kinase II alpha isoform gene in skeletal muscle. *Mol Cell Biol* **16**, 29-36
28. Bayer, K. U., Harbers, K., and Schulman, H. (1998) alpha KAP is an anchoring protein for a novel CaM kinase II isoform in skeletal muscle. *Embo Journal* **17**, 5598-5605
29. Chao, L. H., Pellicena, P., Deindl, S., Barclay, L. A., Schulman, H., and Kuriyan, J. (2010) Intersubunit capture of regulatory segments is a component of cooperative CaMKII activation. *Nat Struct Mol Biol* **17**, 264-272

30. De Koninck, P., and Schulman, H. (1998) Sensitivity of CaM kinase II to the frequency of Ca2+ oscillations. *Science* **279**, 227-230
31. Saitou, N., and Nei, M. (1987) The neighbor-joining method: a new method for reconstructing phylogenetic trees. *Mol Biol Evol* **4**, 406-425
32. Katoh, K., Rozewicki, J., and Yamada, K. D. (2017) MAFFT online service: multiple sequence alignment, interactive sequence choice and visualization. *Brief Bioinform*
33. O'Leary, H., Lasda, E., and Bayer, K. U. (2006) CaMKII beta association with the actin cytoskeleton is regulated by alternative splicing. *Molecular Biology of the Cell* **17**, 4656-4665
34. Chang, H. Y., Minahan, K., Merriman, J. A., and Jones, K. T. (2009) Calmodulin-dependent protein kinase gamma 3 (CamKII gamma 3) mediates the cell cycle resumption of metaphase II eggs in mouse. *Development* **136**, 4077-4081
35. Mukherjee, S., Sheng, W., Sun, R., and Janssen, L. J. (2017) Ca(2+)/calmodulin-dependent protein kinase IIbeta and IIdelta mediate TGFbeta-induced transduction of fibronectin and collagen in human pulmonary fibroblasts. *Am J Physiol Lung Cell Mol Physiol* **312**, L510-L519
36. Bayer, K. U., De Koninck, P., and Schulman, H. (2002) Alternative splicing modulates the frequency-dependent response of CaMKII to Ca(2+) oscillations. *EMBO J* **21**, 3590-3597
37. Kanizay, L. B., Jacobs, T. B., Gillespie, K., Newsome, J. A., Spaid, B. N., and Parrott, W. A. (2015) HtStuf: High-Throughput Sequencing to Locate Unknown DNA Junction Fragments. *Plant Genome-Us* **8**
38. Stratton, M., Lee, I. H., Bhattacharyya, M., Christensen, S. M., Chao, L. H., Schulman, H., Groves, J. T., and Kuriyan, J. (2013) Activation-triggered subunit exchange between CaMKII holoenzymes facilitates the spread of kinase activity. *eLife* **3**, e01610
39. Harmat, V., Bocskei, Z., Naray-Szabo, G., Bata, I., Csutor, A. S., Hermecz, I., Aranyi, P., Szabo, B., Liliom, K., Vertessy, B. G., and Ovadi, J. (2000) A new potent calmodulin antagonist with arylalkylamine structure: crystallographic, spectroscopic and functional studies. *J Mol Biol* **297**, 747-755

FOOTNOTES

Funding was provided by the University of Massachusetts, Amherst and a grant to M.M.S. from the National Institute of General Medical Sciences (R01GM123157).

MAIN FIGURES

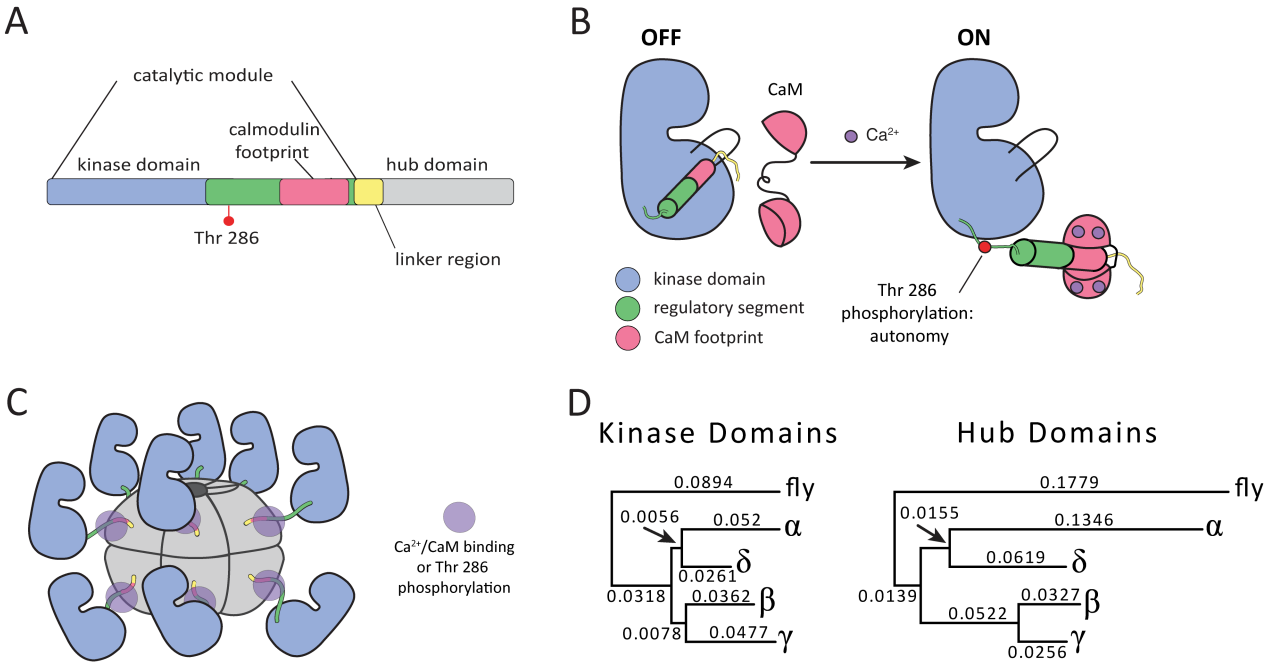

Figure 1. CaMKII sequence divergence and structural organization. (A) Each subunit of CaMKII consists of a kinase domain, regulatory segment, variable linker region, and hub domain. The regulatory segment houses the calmodulin binding region as well as a regulatory autophosphorylation site, Thr 286. (B) The regulatory segment acts as an autoinhibitory domain by blocking the substrate-binding pocket. In the presence of Ca^{2+}, Ca^{2+}-CaM binds the regulatory segment, exposing the substrate-binding pocket and turning the enzyme on. (C) The hub domain oligomerizes CaMKII into two stacked hexameric rings. Shown is a cartoon of an active structure with Ca^{2+}-CaM bound to the regulatory segment. (D) Neighbor Joining reconstructions of kinase and hub domain divergence for the four human CaMKII genes, rooted with *D. melanogaster* CaMKII outgroups.

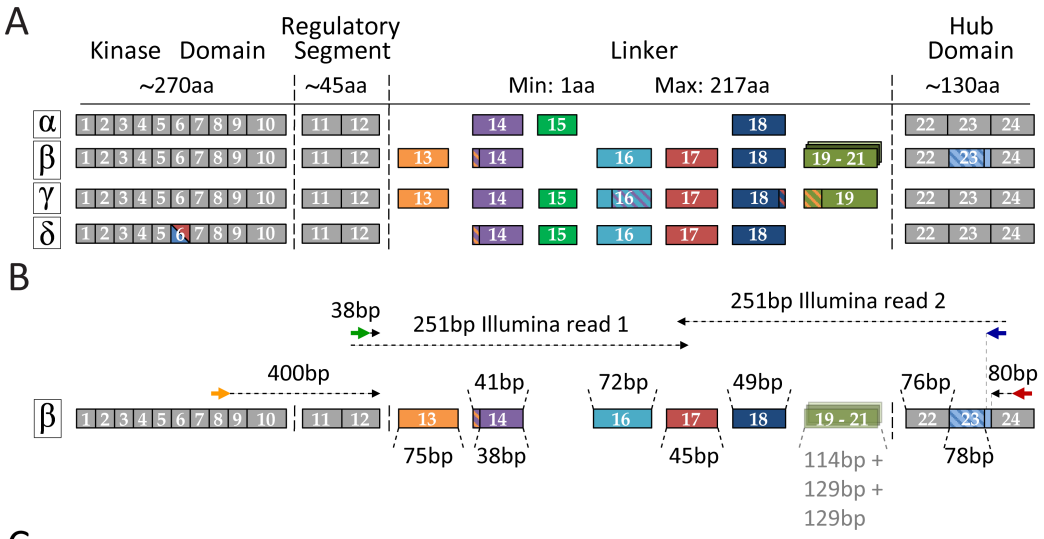

C

Variant name	Linker length	Consensus CDS identifier	Read count	Percent of mapped reads
CaMKIIα				
α14,18	30aa	CCDS43386	183118	94.6%
α-no-linker	0aa	*novel*	7527	3.88%
α14,15,18	21aa	CCDS43387	2941	1.51%
CaMKIβ				
β13,14b,16,17,18	93aa	CCDS5484	65577	44.8%
β14a,16,18	54aa	CCDS5486	20153	13.8%
β14a,16,17,18	69aa	CCDS5485	13327	9.11%
β14b,16,17,18	68aa	CCDS43573	10362	7.08%
β14b,16,18	53aa	*novel*	9192	6.28%
β13,14b,16,18	78aa	*novel*	8616	5.89%
β13,14b,17,18	69aa	*novel*	5805	3.97%
β13,14b,16,17,18-short hub	93aa	*novel*	5442	3.72%
β13,14b,16,17,18,19,20,21	217aa	CCDS5483		*not detected*
β13,14b,17,18-short hub	68aa	CCDS5487	148	0.10%
β14a,18	30aa	CCDS5488	750	0.51%
β-no-linker	0aa	CCDS5489	185	0.13%

Figure 2. Illumina sequencing reveals a heterogeneous population of CaMKII variants in the human hippocampus. (A) Human CaMKII genes are encoded by 24 exons with clear one-to-one correspondence across genes. Exons 1-10 encode the catalytic kinase domain, 11 and 12 encode the regulatory segment, 13-21 encode the variable-length linker, and 22-24 encode the association (hub) domain. Missing linker exons indicate that the exon is not encoded in the corresponding gene. Constitutively incorporated kinase, regulatory segment, and hub exons (grey) are spliced into every transcript. CaMKIIδ encodes two versions of kinase exon 6, with one or the other, but not both, incorporated into transcripts. Several exons contain alternative splice sites, permitting omission of a fraction of the exon (indicated by hatching). CaMKIIβ

encodes three nearly identical proline-rich linker exons: 19-21, homologous to CaMKIIγ exon 19. (B) Illumina library construction is illustrated with CaMKIIβ. Initial PCR amplification of a region encompassing all alternative splice sites (including the linker and hub exon 23) is carried out with primers designed for specificity for target CaMKII gene, to the exclusion of the other three genes (orange and red arrows). Initial amplicons serve as templates for amplification of library inserts in a second PCR reaction with a different primer pair (green and blue arrows). Resulting inserts are fully spanned by paired-end 251bp reads for nearly all splice variants. For CaMKIIβ, this is true as long as exons 19, 20, and 21 are not incorporated. These exons are shown as semi-transparent because they were not incorporated in any detected hippocampal splice variant. (C) Summary of CaMKIIα and β transcript variants detected by Illumina sequencing. All detected variants, including all previously annotated variants, are shown for CaMKIIα. For CaMKIIβ, the top eight read-mapping variants are shown above the black line and the remaining previously annotated variants are shown below the line. Variants are considered novel if they have not been previously annotated. Variants highlighted in blue are those that were used in activity measurements (see Figure 3).

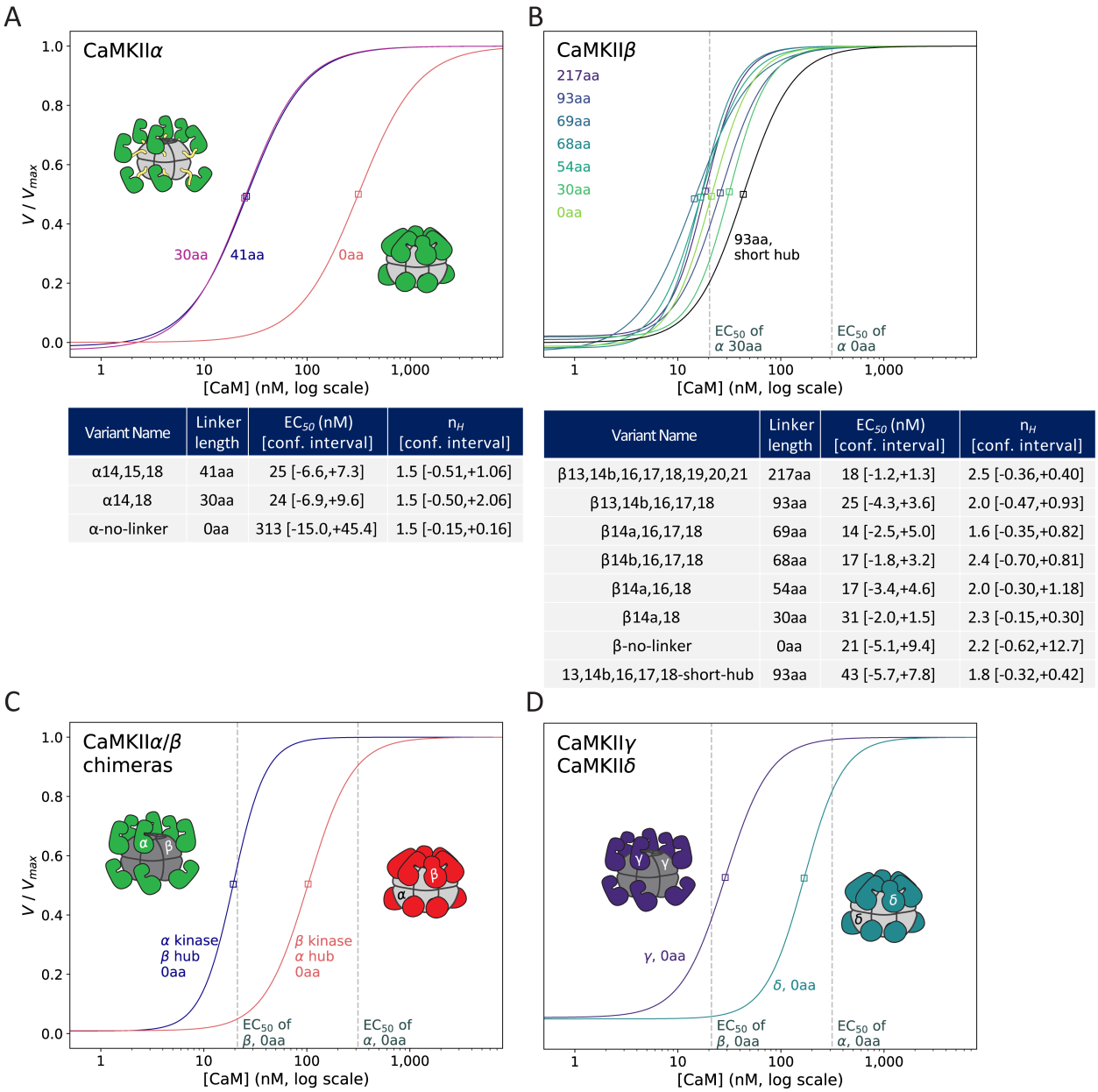

Variant Name	Linker length	EC_{50} (nM) [conf. interval]	n_H [conf. interval]
α14,15,18	41aa	25 [-6.6,+7.3]	1.5 [-0.51,+1.06]
α14,18	30aa	24 [-6.9,+9.6]	1.5 [-0.50,+2.06]
α-no-linker	0aa	313 [-15.0,+45.4]	1.5 [-0.15,+0.16]

Variant Name	Linker length	EC_{50} (nM) [conf. interval]	n_H [conf. interval]
β13,14b,16,17,18,19,20,21	217aa	18 [-1.2,+1.3]	2.5 [-0.36,+0.40]
β13,14b,16,17,18	93aa	25 [-4.3,+3.6]	2.0 [-0.47,+0.93]
β14a,16,17,18	69aa	14 [-2.5,+5.0]	1.6 [-0.35,+0.82]
β14b,16,17,18	68aa	17 [-1.8,+3.2]	2.4 [-0.70,+0.81]
β14a,16,18	54aa	17 [-3.4,+4.6]	2.0 [-0.30,+1.18]
β14a,18	30aa	31 [-2.0,+1.5]	2.3 [-0.15,+0.30]
β-no-linker	0aa	21 [-5.1,+9.4]	2.2 [-0.62,+12.7]
13,14b,16,17,18-short-hub	93aa	43 [-5.7,+7.8]	1.8 [-0.32,+0.42]

Variant Name	Linker length	EC_{50} (nM) [conf. interval]	n_H [conf. interval]
α kinase / β hub	0aa	24 [-0.5,+0.9]	2.7 [-0.26,+0.22]
β kinase / α hub	0aa	102 [-12.0,+17.0]	2.0 [-0.35,+1.18]

Variant Name	Linker length	EC_{50} (nM) [conf. interval]	n_H [conf. interval]
γ-no-linker	0aa	28 [-2.8,+4.8]	2.0 [-0.30,+0.35]
δ-no-linker	0aa	167 [-25.2,+16.9]	2.3 [-0.39,+1.24]

Figure 3. The hub domain plays a crucial role in Ca^{2+}/CaM sensitivity. CaMKII activity against a peptide substrate (syntide) was measured as a function of Ca^{2+}-CaM concentration. To simplify comparisons, fit curves were normalized by the corresponding V_{max} fit parameter and data points are not shown (see Supplement 3). The EC_{50} value for each fit is indicated by a single box, and dashed gray lines in B-D indicate reference EC_{50} values for CaMKIIα-30 and CaMKIIα-0 (B) or CaMKIIβ-0 and CaMKIIα-0 (C, D), as labeled on the X-axis. Activity measurements and EC_{50} and n_H (Hill coefficient) fit parameters are shown for all three CaMKIIα splice variants (A), eight selected CaMKIIβ variants (B), chimeras of CaMKIIα/β with no linker (C), and CaMKIIγ and δ

with no linker (D). EC_{50} and Hill coefficient (n_H) fit parameters with 95% confidence intervals (see Materials and Methods) are listed for each tested variant. Cartoon representations of CaMKII holoenzymes in their autoinhibited states are shown in panel A. For panels C and D, each domain is labeled according to the CaMKII gene.

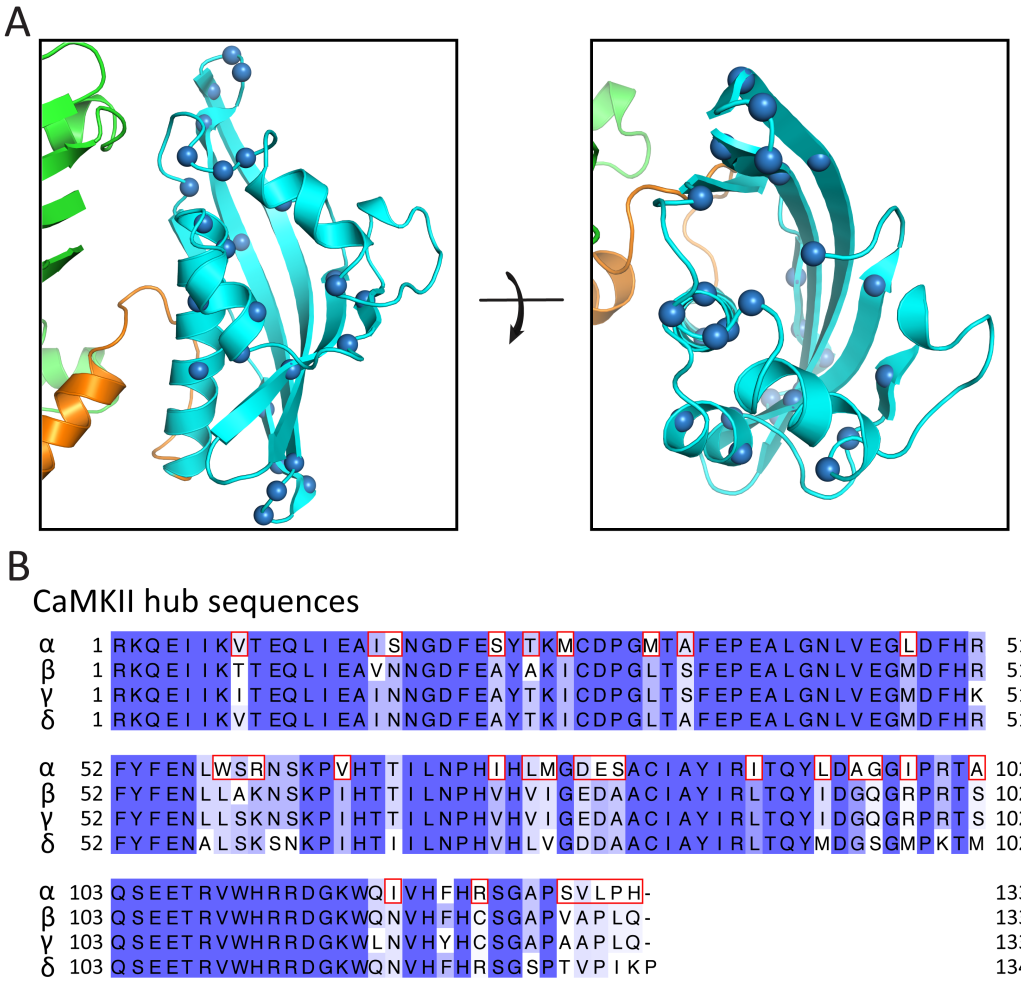

Figure 4. Allosteric contributions from the hub domain regulate CaMKII activation. (A) The 32 positions that differ between CaMKIIα and β hubs are represented by spheres at the alpha Carbon position on the structure of CaMKIIα hub (3SOA). Hub is shown in cyan, regulatory segment in orange, and kinase domain in green. (B) Sequence alignment of CaMKIIα, β, γ, and δ hub domains, colored by degree of conservation (dark to light = most to least conserved). For convenience, all hub sequences start at residue 1. Residues in CaMKIIα hub that differ in CaMKIIβ are highlighted by red boxes.

SUPPLEMENTAL INFORMATION

Supplement 1: Illumina sequencing results for all CaMKII genes.

Variant name	Ensembl identifier	CCDS identifier	NCBI Name	NCBI identifier	Read count	% of reads
CaMKIIα						
α14,18	ENST00000348628	CCDS43386	var. 2	NM_171825	183118	94.6
α-no-linker	*novel*				7527	3.89
α14,15,18	ENST00000398376	CCDS43387	var. 1	NM_015981	2941	1.52

Variant name	Ensembl identifier	CCDS identifier	NCBI Name	NCBI identifier	Read count	% of reads
CaMKIIβ						
β13,14b,16,17,18	ENST00000350811	CCDS5484	var. 2	NM_172078	65577	44.8
β14a,16,18	ENST00000358707	CCDS5486	var. 5	NM_172081	20153	13.8
β14a,16,17,18	ENST00000395747	CCDS5485	var. 3	NM_172079	13327	9.11
β14b,16,17,18	ENST00000258682	CCDS43573	var. 4	NM_172080	10362	7.08
β14b,16,18	*novel*		var. X20	XM_017012664	9192	6.28
β13,14b,16,18	*novel*		var. X24	XM_017012667	8616	5.89
β13,14b,17,18	*novel*		var. X26	XM_017012669	5805	3.97
β13,14b,16,17,18-short hub	*novel*				5442	3.72
β14b,17,18	*novel*		var. X22	XM_017012665	1700	1.16
β14a,17,18	*novel*		var. X21	XM_005249864	1218	0.83
β13,14b,18	*novel*				928	0.63
β14a,18	ENST00000353625	CCDS5488	var. 7	NM_172083	750	0.51
β14b,16,17,18-short hub	*novel*				634	0.43
β13,14a,16,17,18	*novel*				412	0.28
β13,14b,16,18-short hub	*novel*				400	0.27
β14b,18	*novel*				352	0.24
β14a,16,17,18-short hub	*novel*				309	0.21
β14a,16,18-short hub	*novel*				303	0.21
β-no-linker	ENST00000346990	CCDS5489	var. 8	NM_172084	185	0.13
β13,14a,16,18	*novel*				169	0.12
β14a,17,18-short hub	*novel*				155	0.11
β13,14b,17,18-short hub	ENST00000347193	CCDS5487	var. 6	NM_172082	148	0.10
β14b,16,18-short hub	*novel*				104	0.071
β13	*novel*				52	0.036

Variant name	Ensembl identifier	CCDS identifier	NCBI Name	NCBI identifier	Read count	% of reads
CaMKIIδ						
$\delta 6_1$,14b,18	ENST00000514328	CCDS82950	var. 15	NM_001321574	45214	53.0
$\delta 6_1$,14a,18	ENST00000342666 ENST00000379773 ENST00000394524	CCDS3703 CCDS3704 CCDS43263	var. 3 var. 4 var. 2	NM_001221 NM_172127 NM_172128	24712	29.0
$\delta 6_1$,14a,16,17,18	*novel*				6483	7.64
$\delta 6_2$,14b,18	*novel*				4001	4.71
$\delta 6_2$,14a,18	*novel*				1225	1.44
$\delta 6_1$,14a,17,18	ENST00000394522	CCDS47127	var. 6	NM_172114	1121	1.32
$\delta 6_1$,14b,17,18	*novel*				820	0.97
$\delta 6_2$,14a,17,18	*novel*				563	0.66
$\delta 6_1$,14b	*novel*				431	0.51
$\delta 6_1$,14a	*novel*				326	0.38
$\delta 6_1$,14b,16,17,18	*novel*				84	0.10
$\delta 6_1$,14a,15,17,18	*novel*				90	0.11

Variant name	Ensembl identifier	CCDS identifier	NCBI Name	NCBI identifier	Read count	% of reads
CaMKIIγ						
γ14,16a,17,18b,19a	ENST00000322680	CCDS7338	var. 1	NM_172171	53510	31.3
γ14,16a,17,18b	ENST00000322635	CCDS7337	var. 2	NM_172169	47800	28.0
γ14,15,17,18b			var. 12	NM_001367519	19801	11.6
γ14,17,18b,19a			var. 21	NM_001367528	14773	8.65
γ14,15,17,18b,19a			var. 11	NM_001367518	12127	7.09
γ14,17,18b	ENST00000351293	CCDS7336	var. 4	NM_001222	10268	6.01
γ14,16b,17,18b,19a			var. 13	NM_001367520	4586	2.68
γ14,16b,17,18b			var. 6	NM_172173	3253	1.90
γ14,15,16a,17,18b	ENST00000305762		var. 24	NM_001367531	2196	1.29
γ14,15,16a,17,18b,19a			var. 40	NM_001367547	1662	0.97
γ14,18b,19a	*novel*				160	0.094
γ14,15,18b	*novel*				133	0.078
γ14,15	*novel, premature termination*				111	0.065
γ14,15,16b,17,18b	*novel*		var. X32	XM_017016730	100	0.059
γ14,17,18a,19b	*novel*				96	0.056
γ14,18b	*novel*				81	0.047
γ14,15,16b,17,18b,19a	*novel*				72	0.042

Supplement 2: Cluster consensus sequences for all CaMKII genes.

CaMKII alpha_protein sequences

>alpha14,18
WISHRSTVASCMHRQETVDCLKKFNARRKLKGAILTTMLATRNFSGGKSGGNKKSDGVKESSESTNTTIEDE
DTKVRKQE
IIKVTEQLIEAISNGDFESYTKMCD
>alpha-no-linker
WISHRSTVASCMHRQETVDCLKKFNARRKLKGAILTVMLATRNFSVRKQEIIKVTEQLIEAISNGDFESYTKMC
D
>alpha14,15,18
WISHRSTVASCMHRQETVDCLKKFNARRKLKGAILTTMLATRNFSGGKSGGNKKSDGVKKRKSSSSVQLME
SSESTNTTI
EDEDTKVRKQEIIKVTEQLIEAISNGDFESYTKMCD

CaMKII alpha_DNA sequences

>alpha14,18
TGGATCTCGCACCGCTCCACCGTGGCATCCTGCATGCACAGACAGGAGACCGTGGACTGCCTGAAGAAG
TTCAATGCCAG
GAGGAAACTGAAGGGAGCCATTCTCACCACGATGCTGGCCACCAGGAACTTCTCCGGAGGGAAGAGTG
GGGGAAACAAGA
AGAGCGATGGTGTGAAGGAATCCTCAGAGAGCACCAACACCACCATCGAGGATGAAGACACCAAAGTG
CGGAAACAGGAA
ATTATAAAAGTGACAGAGCAGCTGATTGAAGCCATAAGCAATGGAGATTTTGAGTCCTACACGAAGATG
TGCGAC
>alpha-no-linker
TGGATCTCGCACCGCTCCACCGTGGCATCCTGCATGCACAGACAGGAGACCGTGGACTGCCTGAAGAAG
TTCAATGCCAG
GAGGAAACTGAAGGGAGCCATTCTCACCGTGATGCTGGCCACCAGGAACTTCTCCGTGCGGAAACAGG
AAATTATAAAAG
TGACAGAGCAGCTGATTGAAGCCATAAGCAATGGAGATTTTGAGTCCTACACGAAGATGTGCGAC
>alpha14,15,18
TGGATCTCGCACCGCTCCACCGTGGCATCCTGCATGCACAGACAGGAGACCGTGGACTGCCTGAAGAAG
TTCAATGCCAG
GAGGAAACTGAAGGGAGCCATTCTCACCACGATGCTGGCCACCAGGAACTTCTCCGGAGGGAAGAGTG
GGGGAAACAAGA
AGAGCGATGGTGTGAAGAAAAGAAAGTCCAGTTCCAGCGTTCAGTTAATGGAATCCTCAGAGAGCACC
AACACCACCATC
GAGGATGAAGACACCAAAGTGCGGAAACAGGAAATTATAAAAGTGACAGAGCAGCTGATTGAAGCCAT
AAGCAATGGAGA
TTTTGAGTCCTACACGAAGATGTGCGAC

CaMKII beta_protein sequences

>beta13,14b,16,17,18
ILTTMLATRNFSVGRQTTAPATMSTAASGTTMGLVEQAKSLLNKKADGVKPQTNSTKNSAAATSPKGTLPP
AALEPQTTV
IHNPVDGIKESSDSANTTIEDEDAKARKQEIIKTTEQLIEAVNNGDFEAYAKICDPGLTSFEPEALGNLVEGMDF
HRFYF
ENLL
>beta14a,16,18
ILTTMLATRNFSAAKSLLNKKADGVKPQTNSTKNSAAATSPKGTLPPAALESSDSANTTIEDEDAKARKQEIIKT
TEQLI
EAVNNGDFEAYAKICDPGLTSFEPEALGNLVEGMDFHRFYFENLL
>beta14a,16,17,18
ILTTMLATRNFSAAKSLLNKKADGVKPQTNSTKNSAAATSPKGTLPPAALEPQTTVIHNPVDGIKESSDSANTT
IEDEDA
KARKQEIIKTTEQLIEAVNNGDFEAYAKICDPGLTSFEPEALGNLVEGMDFHRFYFENLL
>beta14b,16,17,18
ILTTMLATRNFSAKSLLNKKADGVKPQTNSTKNSAAATSPKGTLPPAALEPQTTVIHNPVDGIKESSDSANTTI
EDEDAK
ARKQEIIKTTEQLIEAVNNGDFEAYAKICDPGLTSFEPEALGNLVEGMDFHRFYFENLL
>beta14b,16,18
ILTTMLATRNFSAKSLLNKKADGVKPQTNSTKNSAAATSPKGTLPPAALESSDSANTTIEDEDAKARKQEIIKTT
EQLIE
AVNNGDFEAYAKICDPGLTSFEPEALGNLVEGMDFHRFYFENLL
>beta13,14b,16,18
ILTTMLATRNFSVGRQTTAPATMSTAASGTTMGLVEQAKSLLNKKADGVKPQTNSTKNSAAATSPKGTLPP
AALESSDSA
NTTIEDEDAKARKQEIIKTTEQLIEAVNNGDFEAYAKICDPGLTSFEPEALGNLVEGMDFHRFYFENLL
>beta13-14b-17-18
ILTTMLATRNFSVGRQTTAPATMSTAASGTTMGLVEQAKSLLNKKADGVKEPQTTVIHNPVDGIKESSDSAN
TTIEDEDA
KARKQEIIKTTEQLIEAVNNGDFEAYAKICDPGLTSFEPEALGNLVEGMDFHRFYFENLL
>beta13,14b,16,17,18-short-hub
ILTTMLATRNFSVGRQTTAPATMSTAASGTTMGLVEQAKSLLNKKADGVKPQTNSTKNSAAATSPKGTLPP
AALEPQTTV
IHNPVDGIKESSDSANTTIEDEDAKARKQEIIKTTEQLIEAVNNGDFEAYAFYFENLL
>beta14b,17,18
ILTTMLATRNFSAKSLLNKKADGVKEPQTTVIHNPVDGIKESSDSANTTIEDEDAKARKQEIIKTTEQLIEAVNN
GDFEA
YAKICDPGLTSFEPEALGNLVEGMDFHRFYFENLL
>beta14a-17-18
ILTTMLATRNFSAAKSLLNKKADGVKEPQTTVIHNPVDGIKESSDSANTTIEDEDAKARKQEIIKTTEQLIEAVN
NGDFE
AYAKICDPGLTSFEPEALGNLVEGMDFHRFYFENLL
>beta13,14b,18

ILTTMLATRNFSVGRQTTAPATMSTAASGTTMGLVEQAKSLLNKKADGVKESSDSANTTIEDEDAKARKQEII
KTTEQLI
EAVNNGDFEAYAKICDPGLTSFEPEALGNLVEGMDFHRFYFENLL
>beta14a,18
ILTTMLATRNFSAANSLLNKKADGVKESSDSANTTIEDEDAKARKQEIIKTTEQLIEAVNNGDFEAYAKICDPGL
TSFEP
EALGNLVEGMDFHRFYFENLL
>beta14b,16,17,18
ILTTMLATRNFSAKSLLNKKADGVKPQTNSTKNSAAATSPKGTLPPAALEPQTTVIHNPVDGIKESSDSANTTI
EDEDAK
ARKQEIIKTTEQLIEAVNNGDFEAYAFYFENLL
>beta13,14b,16,18
ILTTMLATRNFSVGRQTTAPATMSTAASGTTMGLVEQAKSLLNKKADGVKPQTNSTKNSAAATSPKGTLPP
AALESSDSA
NTTIEDEDAKARKQEIIKTTEQLIEAVNNGDFEAYAFYFENLL
>beta14b,18
ILTTMLATRNFSAKSLLNKKADGVKESSDSANTTIEDEDAKARKQEIIKTTEQLIEAVNNGDFEAYAKICDPGLT
SFEPE
ALGNLVEGMDFHRFYFENLL
>beta14a,16,17,18
ILTTMLATRNFSAANSLLNKKADGVKPQTNSTKNSAAATSPKGTLPPAALEPQTTVIHNPVDGIKESSDSANT
TIEDEDA
KARKQEIIKTTEQLIEAVNNGDFEAYAFYFENLL
>beta14a,16,18
ILTTMLATRNFSAAKSLLNKKADGVKPQTNSTKNSAAATSPKGTLPPAALESSDSANTTIEDEDAKARKQEIIKT
TEQLI
EAVNNGDFEAYAFYFENLL
>beta13,14a,16,17,18
ILTTMLATRNFSVGRQTTAPATMSTAASGTTMGLVEQAAKSLLNKKADGVKPQTNSTKNSAAATSPKGTLP
PAALEPQTT
VIHNPVDGIKESSDSANTTIEDEDAKARKQEIIKTTEQLIEAVNNGDFEAYAKICDPGLTSFEPEALGNLVEGM
DFHRFY
FENLL
>beta-no-linker
ILTTMLATRNFSARKQEIIKTTEQLIEAVNNGDFEAYAKICDPGLTSFEPEALGNLVEGMDFHRFYFENLL
>beta13,14a,16,18
ILTTMLATRNFSVGRQTTAPATMSTAASGTTMGLVEQAAKSLLNKKADGVKPQTNSTNNSAAATSPKGTLP
PAALESSDS
ANTTIEDEDAKARKQEIIKTTEQLIEAVNNGDFEAYAKICDPGLTSFEPEALGNLVEGMDFHRFYFENLL
>beta14a,17,18-short-hub
ILTTMLATRNFSAAKSLLNKKADGVKEPQTTVIHNPVDGIKESSDSANTTIEDEDAKARKQEIIKTTEQLIEAVN
NGDFE
AYAFYFENLL
>beta13,14b,17,18-short-hub

ILTTMLATRNFSVGRQTTAPATMSTAASGTTMGLVEQAKSLLNKKADGVKEPQTTVIHNPVDGIKESSDSAN
TTIEDEDA
KARKQEIIKTTEQLIEAVNNGDFEAYAFYFENLL
>beta14b,16,18-short-hub
ILTTMLATRNFSAKSLLNKKADGVKPQTNSTKNSAAATSPKGTLPPAALESSDSANTTIEDEDAKARKQEIIKTT
EQLIE
AVNNGDFEAYAFYFENLL
>beta13
ILTTMLATRNFSVGRQTTAPATMSTAASGTTMGLVEQARKQEIIKTTEQLIEAVNNGDFEAYAKICDPGLTSF
EPEALGN
LVEGMDFHRFYFENLL

<u>CaMKII beta_DNA sequences</u>

>beta13,14b,16,17,18
CATCCTCACCACCATGCTGGCCACACGGAATTTCTCAGTGGGCAGACAGACCACCGCTCCGGCCACAAT
GTCCACCGCGG
CCTCCGGCACCACCATGGGGCTGGTGGAACAAGCCAAGAGTTTACTCAACAAGAAAGCAGATGGAGTC
AAGCCCCAGACG
AATAGCACCAAAAACAGTGCAGCCGCCACCAGCCCCAAAGGGACGCTTCCTCCTGCCGCCCTGGAGCCT
CAAACCACCGT
CATCCATAACCCAGTGGACGGGATTAAGGAGTCTTCTGACAGTGCCAATACCACCATAGAGGATGAAGA
CGCTAAAGCCC
GGAAGCAGGAGATCATTAAGACCACGGAGCAGCTCATCGAGGCCGTCAACAACGGTGACTTTGAGGCC
TACGCGAAAATC
TGTGACCCAGGGCTGACCTCGTTTGAGCCTGAAGCACTGGGCAACCTGGTTGAAGGGATGGACTTCCAC
AGATTCTACTT
CGAGAACCTGCTG
>beta14a,16,18
CATCCTCACCACCATGCTGGCCACACGGAATTTCTCAGCAGCCAAGAGTTTACTCAACAAGAAAGCAGAT
GGAGTCAAGC
CCCAGACGAATAGCACCAAAAACAGTGCAGCCGCCACCAGCCCCAAAGGGACGCTTCCTCCTGCCGCCC
TGGAGTCTTCT
GACAGTGCCAATACCACCATAGAGGATGAAGACGCTAAAGCCCGGAAGCAGGAGATCATTAAGACCAC
GGAGCAGCTCAT
CGAGGCCGTCAACAACGGTGACTTTGAGGCCTACGCGAAAATCTGTGACCCAGGGCTGACCTCGTTTGA
GCCTGAAGCAC
TGGGCAACCTGGTTGAAGGGATGGACTTCCACAGATTCTACTTCGAGAACCTGCTG
>beta14a,16,17,18
CATCCTCACCACCATGCTGGCCACACGGAATTTCTCAGCAGCCAAGAGTTTACTCAACAAGAAAGCAGAT
GGAGTCAAGC
CCCAGACGAATAGCACCAAAAACAGTGCAGCCGCCACCAGCCCCAAAGGGACGCTTCCTCCTGCCGCCC
TGGAGCCTCAA
ACCACCGTCATCCATAACCCAGTGGACGGGATTAAGGAGTCTTCTGACAGTGCCAATACCACCATAGAG
GATGAAGACGC

TAAAGCCCGGAAGCAGGAGATCATTAAGACCACGGAGCAGCTCATCGAGGCCGTCAACAACGGTGACT
TTGAGGCCTACG
CGAAAATCTGTGACCCAGGGCTGACCTCGTTTGAGCCTGAAGCACTGGGCAACCTGGTTGAAGGGATG
GACTTCCACAGA
TTCTACTTCGAGAACCTGCTG
>beta14b,16,17,18
CATCCTCACCACCATGCTGGCCACACGGAATTTCTCAGCCAAGAGTTTACTCAACAAGAAAGCAGATGG
AGTCAAGCCCC
AGACGAATAGCACCAAAAACAGTGCAGCCGCCACCAGCCCCAAAGGGACGCTTCCTCCTGCCGCCCTGG
AGCCTCAAACC
ACCGTCATCCATAACCCAGTGGACGGGATTAAGGAGTCTTCTGACAGTGCCAATACCACCATAGAGGAT
GAAGACGCTAA
AGCCCGGAAGCAGGAGATCATTAAGACCACGGAGCAGCTCATCGAGGCCGTCAACAACGGTGACTTTG
AGGCCTACGCGA
AAATCTGTGACCCAGGGCTGACCTCGTTTGAGCCTGAAGCACTGGGCAACCTGGTTGAAGGGATGGACT
TCCACAGATTC
TACTTCGAGAACCTGCTG
>beta14b,16,18
CATCCTCACCACCATGCTGGCCACACGGAATTTCTCAGCCAAGAGTTTACTCAACAAGAAAGCAGATGG
AGTCAAGCCCC
AGACGAATAGCACCAAAAACAGTGCAGCCGCCACCAGCCCCAAAGGGACGCTTCCTCCTGCCGCCCTGG
AGTCTTCTGAC
AGTGCCAATACCACCATAGAGGATGAAGACGCTAAAGCCCGGAAGCAGGAGATCATTAAGACCACGGA
GCAGCTCATCGA
GGCCGTCAACAACGGTGACTTTGAGGCCTACGCGAAAATCTGTGACCCAGGGCTGACCTCGTTTGAGCC
TGAAGCACTGG
GCAACCTGGTTGAAGGGATGGACTTCCACAGATTCTACTTCGAGAACCTGCTG
>beta13,14b,16,18
CATCCTCACCACCATGCTGGCCACACGGAATTTCTCAGTGGGCAGACAGACCACCGCTCCGGCCACAAT
GTCCACCGCGG
CCTCCGGCACCACCATGGGGCTGGTGGAACAAGCCAAGAGTTTACTCAACAAGAAAGCAGATGGAGTC
AAGCCCCAGACG
AATAGCACCAAAAACAGTGCAGCCGCCACCAGCCCCAAAGGGACGCTTCCTCCTGCCGCCCTGGAGTCT
TCTGACAGTGC
CAATACCACCATAGAGGATGAAGACGCTAAAGCCCGGAAGCAGGAGATCATTAAGACCACGGAGCAGC
TCATCGAGGCCG
TCAACAACGGTGACTTTGAGGCCTACGCGAAAATCTGTGACCCAGGGCTGACCTCGTTTGAGCCTGAAG
CACTGGGCAAC
CTGGTTGAAGGGATGGACTTCCACAGATTCTACTTCGAGAACCTGCTG
>beta13-14b-17-18
CATCCTCACCACCATGCTGGCCACACGGAATTTCTCAGTGGGCAGACAGACCACCGCTCCGGCCACAAT
GTCCACCGCGG
CCTCCGGCACCACCATGGGGCTGGTGGAACAAGCCAAGAGTTTACTCAACAAGAAAGCAGATGGAGTC
AAGGAGCCTCAA

ACCACCGTCATCCATAACCCAGTGGACGGGATTAAGGAGTCTTCTGACAGTGCCAATACCACCATAGAG
GATGAAGACGC
TAAAGCCCGGAAGCAGGAGATCATTAAGACCACGGAGCAGCTCATCGAGGCCGTCAACAACGGTGACT
TTGAGGCCTACG
CGAAAATCTGTGACCCAGGGCTGACCTCGTTTGAGCCTGAAGCACTGGGCAACCTGGTTGAAGGGATG
GACTTCCACAGA
TTCTACTTCGAGAACCTGCTG
>beta13,14b,16,17,18-short-hub
CATCCTCACCACCATGCTGGCCACACGGAATTTCTCAGTGGGCAGACAGACCACCGCTCCGGCCACAAT
GTCCACCGCGG
CCTCCGGCACCACCATGGGGCTGGTGGAACAAGCCAAGAGTTTACTCAACAAGAAAGCAGATGGAGTC
AAGCCCCAGACG
AATAGCACCAAAAACAGTGCAGCCGCCACCAGCCCCAAAGGGACGCTTCCTCCTGCCGCCCTGGAGCCT
CAAACCACCGT
CATCCATAACCCAGTGGACGGGATTAAGGAGTCTTCTGACAGTGCCAATACCACCATAGAGGATGAAGA
CGCTAAAGCCC
GGAAGCAGGAGATCATTAAGACCACGGAGCAGCTCATCGAGGCCGTCAACAACGGTGACTTTGAGGCC
TACGCATTCTAC
TTCGAGAACCTGCTG
>beta14b,17,18
CATCCTCACCACCATGCTGGCCACACGGAATTTCTCAGCCAAGAGTTTACTCAACAAGAAAGCAGATGG
AGTCAAGGAGC
CTCAAACCACCGTCATCCATAACCCAGTGGACGGGATTAAGGAGTCTTCTGACAGTGCCAATACCACCAT
AGAGGATGAA
GACGCTAAAGCCCGGAAGCAGGAGATCATTAAGACCACGGAGCAGCTCATCGAGGCCGTCAACAACGG
TGACTTTGAGGC
CTACGCGAAAATCTGTGACCCAGGGCTGACCTCGTTTGAGCCTGAAGCACTGGGCAACCTGGTTGAAGG
GATGGACTTCC
ACAGATTCTACTTCGAGAACCTGCTG
>beta14a-17-18
CATCCTCACCACCATGCTGGCCACACGGAATTTCTCAGCAGCCAAGAGTTTACTCAACAAGAAAGCAGAT
GGAGTCAAGG
AGCCTCAAACCACCGTCATCCATAACCCAGTGGACGGGATTAAGGAGTCTTCTGACAGTGCCAATACCA
CCATAGAGGAT
GAAGACGCTAAAGCCCGGAAGCAGGAGATCATTAAGACCACGGAGCAGCTCATCGAGGCCGTCAACAA
CGGTGACTTTGA
GGCCTACGCGAAAATCTGTGACCCAGGGCTGACCTCGTTTGAGCCTGAAGCACTGGGCAACCTGGTTGA
AGGGATGGACT
TCCACAGATTCTACTTCGAGAACCTGCTG
>beta13,14b,18
CATCCTCACCACCATGCTGGCCACACGGAATTTCTCAGTGGGCAGACAGACCACCGCTCCGGCCACAAT
GTCCACCGCGG
CCTCCGGCACCACCATGGGGCTGGTGGAACAAGCCAAGAGTTTACTCAACAAGAAAGCAGATGGAGTC
AAGGAGTCTTCT

GACAGTGCCAATACCACCATAGAGGATGAAGACGCTAAAGCCCGGAAGCAGGAGATCATTAAGACCAC
GGAGCAGCTCAT
CGAGGCCGTCAACAACGGTGACTTTGAGGCCTACGCGAAAATCTGTGACCCAGGGCTGACCTCGTTTGA
GCCTGAAGCAC
TGGGCAACCTGGTTGAAGGGATGGACTTCCACAGATTCTACTTCGAGAACCTGCTG
>beta14a,18
CATCCTCACCACCATGCTGGCCACACGGAATTTCTCAGCAGCCAATAGTTTACTCAACAAGAAAGCAGAT
GGAGTCAAGG
AGTCTTCTGACAGTGCCAATACCACCATAGAGGATGAAGACGCTAAAGCCCGGAAGCAGGAGATCATTA
AGACCACGGAG
CAGCTCATCGAGGCCGTCAACAACGGTGACTTTGAGGCCTACGCGAAAATCTGTGACCCAGGGCTGACC
TCGTTTGAGCC
TGAAGCACTGGGCAACCTGGTTGAAGGGATGGACTTCCACAGATTCTACTTCGAGAACCTGCTG
>beta14b,16,17,18
CATCCTCACCACCATGCTGGCCACACGGAATTTCTCAGCCAAGAGTTTACTCAACAAGAAAGCAGATGG
AGTCAAGCCCC
AGACGAATAGCACCAAAAACAGTGCAGCCGCCACCAGCCCCAAAGGGACGCTTCCTCCTGCCGCCCTGG
AGCCTCAAACC
ACCGTCATCCATAACCCAGTGGACGGGATTAAGGAGTCTTCTGACAGTGCCAATACCACCATAGAGGAT
GAAGACGCTAA
AGCCCGGAAGCAGGAGATCATTAAGACCACGGAGCAGCTCATCGAGGCCGTCAACAACGGTGACTTTG
AGGCCTACGCAT
TCTACTTCGAGAACCTGCTG
>beta13,14b,16,18
CATCCTCACCACCATGCTGGCCACACGGAATTTCTCAGTGGGCAGACAGACCACCGCTCCGGCCACAAT
GTCCACCGCGG
CCTCCGGCACCACCATGGGGCTGGTGGAACAAGCCAAGAGTTTACTCAACAAGAAAGCAGATGGAGTC
AAGCCCCAGACG
AATAGCACCAAAAACAGTGCAGCCGCCACCAGCCCCAAAGGGACGCTTCCTCCTGCCGCCCTGGAGTCT
TCTGACAGTGC
CAATACCACCATAGAGGATGAAGACGCTAAAGCCCGGAAGCAGGAGATCATTAAGACCACGGAGCAGC
TCATCGAGGCCG
TCAACAACGGTGACTTTGAGGCCTACGCATTCTACTTCGAGAACCTGCTG
>beta14b,18
CATCCTCACCACCATGCTGGCCACACGGAATTTCTCAGCCAAGAGTTTACTCAACAAGAAAGCAGATGG
AGTCAAGGAGT
CTTCTGACAGTGCCAATACCACCATAGAGGATGAAGACGCTAAAGCCCGGAAGCAGGAGATCATTAAG
ACCACGGAGCAG
CTCATCGAGGCCGTCAACAACGGTGACTTTGAGGCCTACGCGAAAATCTGTGACCCAGGGCTGACCTCG
TTTGAGCCTGA
AGCACTGGGCAACCTGGTTGAAGGGATGGACTTCCACAGATTCTACTTCGAGAACCTGCTG
>beta14a,16,17,18
CATCCTCACCACCATGCTGGCCACACGGAATTTCTCAGCAGCCAATAGTTTACTCAACAAGAAAGCAGAT
GGAGTCAAGC

CCCAGACGAATAGCACCAAAAACAGTGCAGCCGCCACCAGCCCCAAAGGGACGCTTCCTCCTGCCGCCC
TGGAGCCTCAA
ACCACCGTCATCCATAACCCAGTGGACGGGATTAAGGAGTCTTCTGACAGTGCCAATACCACCATAGAG
GATGAAGACGC
TAAAGCCCGGAAGCAGGAGATCATTAAGACCACGGAGCAGCTCATCGAGGCCGTCAACAACGGTGACT
TTGAGGCCTACG
CATTCTACTTCGAGAACCTGCTG
>beta14a,16,18
CATCCTCACCACCATGCTGGCCACACGGAATTTCTCAGCAGCCAAGAGTTTACTCAACAAGAAAGCAGAT
GGAGTCAAGC
CCCAGACGAATAGCACCAAAAACAGTGCAGCCGCCACCAGCCCCAAAGGGACGCTTCCTCCTGCCGCCC
TGGAGTCTTCT
GACAGTGCCAATACCACCATAGAGGATGAAGACGCTAAAGCCCGGAAGCAGGAGATCATTAAGACCAC
GGAGCAGCTCAT
CGAGGCCGTCAACAACGGTGACTTTGAGGCCTACGCATTCTACTTCGAGAACCTGCTG
>beta13,14a,16,17,18
CATCCTCACCACCATGCTGGCCACACGGAATTTCTCAGTGGGCAGACAGACCACCGCTCCGGCCACAAT
GTCCACCGCGG
CCTCCGGCACCACCATGGGGCTGGTGGAACAAGCAGCCAAGAGTTTACTCAACAAGAAAGCAGATGGA
GTCAAGCCCCAG
ACGAATAGCACCAAAAACAGTGCAGCCGCCACCAGCCCCAAAGGGACGCTTCCTCCTGCCGCCCTGGAG
CCTCAAACCAC
CGTCATCCATAACCCAGTGGACGGGATTAAGGAGTCTTCTGACAGTGCCAATACCACCATAGAGGATGA
AGACGCTAAAG
CCCGGAAGCAGGAGATCATTAAGACCACGGAGCAGCTCATCGAGGCCGTCAACAACGGTGACTTTGAG
GCCTACGCGAAA
ATCTGTGACCCAGGGCTGACCTCGTTTGAGCCTGAAGCACTGGGCAACCTGGTTGAAGGGATGGACTTC
CACAGATTCTA
CTTCGAGAACCTGCTG
>beta-no-linker
CATCCTCACCACCATGCTGGCCACACGGAATTTCTCAGCCCGGAAGCAGGAGATCATTAAGACCACGGA
GCAGCTCATCG
AGGCCGTCAACAACGGTGACTTTGAGGCCTACGCGAAAATCTGTGACCCAGGGCTGACCTCGTTTGAGC
CTGAAGCACTG
GGCAACCTGGTTGAAGGGATGGACTTCCACAGATTCTACTTCGAGAACCTGCTG
>beta13,14a,16,18
CATCCTCACCACCATGCTGGCCACACGGAATTTCTCAGTGGGCAGACAGACCACCGCTCCGGCCACAAT
GTCCACCGCGG
CCTCCGGCACCACCATGGGGCTGGTGGAACAAGCAGCCAAGAGTTTACTCAACAAGAAAGCAGATGGA
GTCAAGCCCCAG
ACGAATAGCACCAACAACAGTGCAGCCGCCACCAGCCCCAAAGGGACGCTTCCTCCTGCCGCCCTGGAG
TCTTCTGACAG
TGCCAATACCACCATAGAGGATGAAGACGCTAAAGCCCGGAAGCAGGAGATCATTAAGACCACGGAGC
AGCTCATCGAGG

CCGTCAACAACGGTGACTTTGAGGCCTACGCGAAAATCTGTGACCCAGGGCTGACCTCGTTTGAGCCTG
AAGCACTGGGC
AACCTGGTTGAAGGGATGGACTTCCACAGATTCTACTTCGAGAACCTGCTG
>beta14a,17,18-short-hub
CATCCTCACCACCATGCTGGCCACACGGAATTTCTCAGCAGCCAAGAGTTTACTCAACAAGAAAGCAGAT
GGAGTCAAGG
AGCCTCAAACCACCGTCATCCATAACCCAGTGGACGGGATTAAGGAGTCTTCTGACAGTGCCAATACCA
CCATAGAGGAT
GAAGACGCTAAAGCCCGGAAGCAGGAGATCATTAAGACCACGGAGCAGCTCATCGAGGCCGTCAACAA
CGGTGACTTTGA
GGCCTACGCATTCTACTTCGAGAACCTGCTG
>beta13,14b,17,18-short-hub
CATCCTCACCACCATGCTGGCCACACGGAATTTCTCAGTGGGCAGACAGACCACCGCTCCGGCCACAAT
GTCCACCGCGG
CCTCCGGCACCACCATGGGGCTGGTGGAACAAGCCAAGAGTTTACTCAACAAGAAAGCAGATGGAGTC
AAGGAGCCTCAA
ACCACCGTCATCCATAACCCAGTGGACGGGATTAAGGAGTCTTCTGACAGTGCCAATACCACCATAGAG
GATGAAGACGC
TAAAGCCCGGAAGCAGGAGATCATTAAGACCACGGAGCAGCTCATCGAGGCCGTCAACAACGGTGACT
TTGAGGCCTACG
CATTCTACTTCGAGAACCTGCTG
>beta14b,16,18-short-hub
CATCCTCACCACCATGCTGGCCACACGGAATTTCTCAGCCAAGAGTTTACTCAACAAGAAAGCAGATGG
AGTCAAGCCCC
AGACGAATAGCACCAAAAACAGTGCAGCCGCCACCAGCCCCAAAGGGACGCTTCCTCCTGCCGCCCTGG
AGTCTTCTGAC
AGTGCCAATACCACCATAGAGGATGAAGACGCTAAAGCCCGGAAGCAGGAGATCATTAAGACCACGGA
GCAGCTCATCGA
GGCCGTCAACAACGGTGACTTTGAGGCCTACGCATTCTACTTCGAGAACCTGCTG
>beta13
CATCCTCACCACCATGCTGGCCACACGGAATTTCTCAGTGGGCAGACAGACCACCGCTCCGGCCACAAT
GTCCACCGCGG
CCTCCGGCACCACCATGGGGCTGGTGGAACAAGCCCGGAAGCAGGAGATCATTAAGACCACGGAGCAG
CTCATCGAGGCC
GTCAACAACGGTGACTTTGAGGCCTACGCGAAAATCTGTGACCCAGGGCTGACCTCGTTTGAGCCTGAA
GCACTGGGCAA
CCTGGTTGAAGGGATGGACTTCCACAGATTCTACTTCGAGAACCTGCTG

<u>CaMKII delta_protein sequences</u>

>F read, delta6v1,14b-18
SEADASHCIQQILESVNHCHLNGIVHRDLKPENLLLASKSKGAAVKLADFGLAIEVQGDQQAWFGFAGTPGY
LSPEVLRK
DPY
>R read, delta6v1,14b-18

ICQRSTVASMMHRQETVDCLKKFNARRKLKGAILTTMLATRNFSAKSLLKKPDGVKESTESSNTTIEDEDVKA
RKQEIIK
VTE
>F read, delta6v1,14a-18
SEADASHCIQQILESVNHCHLNGIVHRDLKPENLLLASKSKGAAVKLADFGLAIEVQGDQQAWFGFAGTPGY
LSPEVLRK
DPY
>R read, delta6v1,14a-18
CQRSTVASMMHRQETVDCLKKFNARRKLKGAILTTMLATRNFSAAKSLLKKPDGVKESTESSNTTIEDEDVKA
RKQEIIK
VTE
>F read, delta6v1,14a-16-17-18
SEADASHCIQQILESVNHCHLNGIVHRDLKPENLLLASKSKGAAVKLADFGLAIEVQGDQQAWFGFAGTPGY
LSPEVLRK
DPY
>R read, delta6v1,14a-16-17-18
TMLATRNFSAAKSLLKKPDGVKINNKANVVTSPKENIPTPALEPQTTVIHNPDGNKESTESSNTTIEDEDVKAR
KQEIIK
VTE
>F read, delta6v2,14b-18
SEADASHCIQQILEAVLHCHQMGVVHRDLKPENLLLASKSKGAAVKLADFGLAIEVQGDQQAWFGFAGTPG
YLSPEVLRK
DPY
>R read, delta6v2,14b-18
ICQRSTVASMMHRQETVDCLKKFNARRKLKGAILTTMLATRNFSAKSLLKKPDGVKESTESSNTTIEDEDVKA
RKQEIIK
VTE
>F read, delta6v2,14a-18
SEADASHCIQQILEAVLHCHQMGVVHRDLKPENLLLASKSKGAAVKLADFGLAIEVQGDQQAWFGFAGTPG
YLSPEVLLK
DPY
>R read, delta6v2,14a-18
CQRSTVASMMHRQETVDCLKKFNARRKLKGAILTTMLATRNFSAAKSLLKKPDGVKESTESSNTTIEDEDVKA
RKQEIIK
VTE
>F read, delta6v1,14a-17-18
SEADASHCIQQILESVNHCHLNGIVHRDLKPENLLLASKSKGAAVKLADFGLAIEVQGDQQAWFGFAGTPGY
LSPEVLRK
DPY
>R read, delta6v1,14a-17-18
TVDCLKKFNARRKLKGAILTTMLATRNFSAAKSLLKKPDGVKEPQTTVIHNPDGNKESTESSNTTIEDEDVKAR
KQEIIK
VTE
>F read, delta6v1,14b-17-18

SEADASHCIQQILESVNHCHLNGIVHRDLKPENLLLASKSKGAAVKLADFGLAIEVQGDQQAWFGFAGTPGY
LSPEVLRK
DPY
>R read, delta6v1,14b-17-18
ETVDCLKKFNARRKLKGAILTTMLATRNFSAKSLLKKPDGVKEPQTTVIHNPDGNKESTESSNTTIEDEDVKAR
KQEIIK
VTE
>F read, delta6v2,14a-17-18
SEADASHCIQQILEAVLHCHQMGVVHRDLKPENLLLASKSKGAAVKLADFGLAIEVQGDQQAWFGFAGTPG
YLSPEVLRK
DPY
>R read, delta6v2,14a-17-18
TVDCLKKFNARRKLKGAILTTMLATRNFSAAKSLLKKPDGVKEPQTTVIHNPDGNKESTESSNTTIEDEDVKAR
KQEIIK
VTE
>F read, delta6v1,14b
SEADASHCIQQILESVNHCHLNGIVHRDLKPENLLLASKSKGAAVKLADFGLAIEVQGDQQAWFGFAGTPGY
LSPEVLRK
DPY
>R read, delta6v1,14b
QPCQTHHSLRGTEAPMDLSTFYCCFHDAQTGDCRLLEEI*C*KKTKGCHLDNYAGYKEFLSQEFVEETRWSK
ARKQEIIK
VTE
>F read, delta6v1,14a
SEADASHCIQQILESVNHCHLNGIVHRDLKPENLLLASKSKGAAVKLADFGLAIEVQGDQQAWFGFAGTPGY
LSPEVLRK
DPY
>R read, delta6v1,14a
PCQTHHSLRGTEAPMDLSTFYCCFHDAQTGDCRLLEEI*C*KKTKGCHLDNYAGYKEFLSSQEFVEETRWSKA
RKQEIIK
VTE
>F read, delta6v1,14b-16-17-18
SEADASHCIQQILESVNHCHLNGIVHRDLKPENLLLASKSKGAAVKLADFGLAIEVQGDQQAWFGFAGTPGY
LSPEVLRK
DPY
>R read, delta6v1,14b-16-17-18
TTMLATRNFSAKSLLKKPDGVKINNKANVVTSPKENIPTPALEPQTTVIHNPDGNKESTESSNTTIEDEDVKAR
KQEIIK
VTE
>F read, delta6v1,14a-15-17-18
SEADASHCIQQILESVNHCHLNGIVHRDLKPENLLLASKSKGAAVKLADFGLAIEVQGDQQAWFGFAGTPGY
LSPEVLRK
DPY
>R read, delta6v1,14a-15-17-18

RKLKGAILTTMLATRNFSAAKSLLKKPDGVKKRKSSSSVQMMEPQTTVIHNPDGNKESTESSNTTIEDEDVKA
RKQEIIK
VTE

CaMKII delta_DNA sequences

>F read, delta6v1,14b-18
CAGTGAAGCTGATGCCAGTCATTGTATACAGCAGATTCTAGAAAGTGTTAATCATTGTCACCTAAATGGC
ATAGTTCACA
GGGACCTGAAGCCTGAGAATTTGCTTTTAGCTAGCAAATCCAAGGGAGCAGCTGTGAAATTGGCAGACT
TTGGCTTAGCC
ATAGAAGTTCAAGGGGACCAGCAGGCGTGGTTTGGTTTTGCTGGCACACCTGGATATCTTTCTCCAGAA
GTTTTACGTAA
AGATCCTTATG
>R read, delta6v1,14b-18
GATCTGTCAACGTTCTACTGTTGCTTCCATGATGCACAGACAGGAGACTGTAGACTGCTTGAAGAAATTT
AATGCTAGAA
GAAAACTAAAGGGTGCCATCTTGACAACTATGCTGGCTACAAGGAATTTCTCAGCCAAGAGTTTGTTGA
AGAAACCAGAT
GGAGTAAAGGAGTCAACTGAGAGTTCAAATACAACAATTGAGGATGAAGATGTGAAAGCACGAAAGCA
AGAGATTATCAA
AGTCACTGAAC
>F read, delta6v1,14a-18
CAGTGAAGCTGATGCCAGTCATTGTATACAGCAGATTCTAGAAAGTGTTAATCATTGTCACCTAAATGGC
ATAGTTCACA
GGGACCTGAAGCCTGAGAATTTGCTTTTAGCTAGCAAATCCAAGGGAGCAGCTGTGAAATTGGCAGACT
TTGGCTTAGCC
ATAGAAGTTCAAGGGGACCAGCAGGCGTGGTTTGGTTTTGCTGGCACACCTGGATATCTTTCTCCAGAA
GTTTTACGTAA
AGATCCTTATG
>R read, delta6v1,14a-18
CTGTCAACGTTCTACTGTTGCTTCCATGATGCACAGACAGGAGACTGTAGACTGCTTGAAGAAATTTAAT
GCTAGAAGAA
AACTAAAGGGTGCCATCTTGACAACTATGCTGGCTACAAGGAATTTCTCAGCAGCCAAGAGTTTGTTGA
AGAAACCAGAT
GGAGTAAAGGAGTCAACTGAGAGTTCAAATACAACAATTGAGGATGAAGATGTGAAAGCACGAAAGCA
AGAGATTATCAA
AGTCACTGAAC
>F read, delta6v1,14a-16-17-18
CAGTGAAGCTGATGCCAGTCATTGTATACAGCAGATTCTAGAAAGTGTTAATCATTGTCACCTAAATGGC
ATAGTTCACA
GGGACCTGAAGCCTGAGAATTTGCTTTTAGCTAGCAAATCCAAGGGAGCAGCTGTGAAATTGGCAGACT
TTGGCTTAGCC
ATAGAAGTTCAAGGGGACCAGCAGGCGTGGTTTGGTTTTGCTGGCACACCTGGATATCTTTCTCCAGAA
GTTTTACGTAA

AGATCCTTATG
>R read, delta6v1,14a-16-17-18
AACTATGCTGGCTACAAGGAATTTCTCAGCAGCCAAGAGTTTGTTGAAGAAACCAGATGGAGTAAAGAT
AAACAACAAAG
CCAACGTGGTAACCAGCCCCAAAGAAAATATTCCTACCCCAGCGCTGGAGCCCCAAACTACTGTAATCCA
CAACCCTGAT
GGAAACAAGGAGTCAACTGAGAGTTCAAATACAACAATTGAGGATGAAGATGTGAAAGCACGAAAGCA
AGAGATTATCAA
AGTCACTGAAC
>F read, delta6v2,14b-18
CAGTGAAGCTGATGCCAGTCATTGCATTCAGCAGATCCTGGAGGCTGTGCTACACTGCCATCAGATGGG
CGTGGTCCATC
GGGACCTGAAGCCTGAGAATTTGCTTTTAGCTAGCAAATCCAAGGGAGCAGCTGTGAAATTGGCAGACT
TTGGCTTAGCC
ATAGAAGTTCAAGGGGACCAGCAGGCGTGGTTTGGTTTTGCTGGCACACCTGGATATCTTTCTCCAGAA
GTTTTACGTAA
AGATCCTTATG
>R read, delta6v2,14b-18
GATCTGTCAACGTTCTACTGTTGCTTCCATGATGCACAGACAGGAGACTGTAGACTGCTTGAAGAAATTT
AATGCTAGAA
GAAAACTAAAGGGTGCCATCTTGACAACTATGCTGGCTACAAGGAATTTCTCAGCCAAGAGTTTGTTGA
AGAAACCAGAT
GGAGTAAAGGAGTCAACTGAGAGTTCAAATACAACAATTGAGGATGAAGATGTGAAAGCACGAAAGCA
AGAGATTATCAA
AGTCACTGAAC
>F read, delta6v2,14a-18
CAGTGAAGCTGATGCCAGTCATTGCATTCAGCAGATCCTGGAGGCTGTGCTACACTGCCATCAGATGGG
CGTGGTCCATC
GGGACCTGAAGCCTGAGAATTTGCTTTTAGCTAGCAAATCCAAGGGAGCAGCTGTGAAATTGGCAGACT
TTGGCTTAGCC
ATAGAAGTTCAAGGGGACCAGCAGGCGTGGTTTGGTTTTGCTGGCACACCTGGATATCTTTCTCCAGAA
GTTTTACTTAA
AGATCCTTATG
>R read, delta6v2,14a-18
CTGTCAACGTTCTACTGTTGCTTCCATGATGCACAGACAGGAGACTGTAGACTGCTTGAAGAAATTTAAT
GCTAGAAGAA
AACTAAAGGGTGCCATCTTGACAACTATGCTGGCTACAAGGAATTTCTCAGCAGCCAAGAGTTTGTTGA
AGAAACCAGAT
GGAGTAAAGGAGTCAACTGAGAGTTCAAATACAACAATTGAGGATGAAGATGTGAAAGCACGAAAGCA
AGAGATTATCAA
AGTCACTGAAC
>F read, delta6v1,14a-17-18
CAGTGAAGCTGATGCCAGTCATTGTATACAGCAGATTCTAGAAAGTGTTAATCATTGTCACCTAAATGGC
ATAGTTCACA

GGGACCTGAAGCCTGAGAATTTGCTTTTAGCTAGCAAATCCAAGGGAGCAGCTGTGAAATTGGCAGACT
TTGGCTTAGCC
ATAGAAGTTCAAGGGGACCAGCAGGCGTGGTTTGGTTTTGCTGGCACACCTGGATATCTTTCTCCAGAA
GTTTTACGTAA
AGATCCTTATG
>R read, delta6v1,14a-17-18
GACTGTAGACTGCTTGAAGAAATTTAATGCTAGAAGAAAACTAAAGGGTGCCATCTTGACAACTATGCT
GGCTACAAGGA
ATTTCTCAGCAGCCAAGAGTTTGTTGAAGAAACCAGATGGAGTAAAGGAGCCCCAAACTACTGTAATCC
ACAACCCTGAT
GGAAACAAGGAGTCAACTGAGAGTTCAAATACAACAATTGAGGATGAAGATGTGAAAGCACGAAAGCA
AGAGATTATCAA
AGTCACTGAAC
>F read, delta6v1,14b-17-18
CAGTGAAGCTGATGCCAGTCATTGTATACAGCAGATTCTAGAAAGTGTTAATCATTGTCACCTAAATGGC
ATAGTTCACA
GGGACCTGAAGCCTGAGAATTTGCTTTTAGCTAGCAAATCCAAGGGAGCAGCTGTGAAATTGGCAGACT
TTGGCTTAGCC
ATAGAAGTTCAAGGGGACCAGCAGGCGTGGTTTGGTTTTGCTGGCACACCTGGATATCTTTCTCCAGAA
GTTTTACGTAA
AGATCCTTATG
>R read, delta6v1,14b-17-18
GGAGACTGTAGACTGCTTGAAGAAATTTAATGCTAGAAGAAAACTAAAGGGTGCCATCTTGACAACTAT
GCTGGCTACAA
GGAATTTCTCAGCCAAGAGTTTGTTGAAGAAACCAGATGGAGTAAAGGAGCCCCAAACTACTGTAATCC
ACAACCCTGAT
GGAAACAAGGAGTCAACTGAGAGTTCAAATACAACAATTGAGGATGAAGATGTGAAAGCACGAAAGCA
AGAGATTATCAA
AGTCACTGAAC
>F read, delta6v2,14a-17-18
CAGTGAAGCTGATGCCAGTCATTGCATTCAGCAGATCCTGGAGGCTGTGCTACACTGCCATCAGATGGG
CGTGGTCCATC
GGGACCTGAAGCCTGAGAATTTGCTTTTAGCTAGCAAATCCAAGGGAGCAGCTGTGAAATTGGCAGACT
TTGGCTTAGCC
ATAGAAGTTCAAGGGGACCAGCAGGCGTGGTTTGGTTTTGCTGGCACACCTGGATATCTTTCTCCAGAA
GTTTTACGTAA
AGATCCTTATG
>R read, delta6v2,14a-17-18
GACTGTAGACTGCTTGAAGAAATTTAATGCTAGAAGAAAACTAAAGGGTGCCATCTTGACAACTATGCT
GGCTACAAGGA
ATTTCTCAGCAGCCAAGAGTTTGTTGAAGAAACCAGATGGAGTAAAGGAGCCCCAAACTACTGTAATCC
ACAACCCTGAT
GGAAACAAGGAGTCAACTGAGAGTTCAAATACAACAATTGAGGATGAAGATGTGAAAGCACGAAAGCA
AGAGATTATCAA

AGTCACTGAAC
>F read, delta6v1,14b
CAGTGAAGCTGATGCCAGTCATTGTATACAGCAGATTCTAGAAAGTGTTAATCATTGTCACCTAAATGGC
ATAGTTCACA
GGGACCTGAAGCCTGAGAATTTGCTTTTAGCTAGCAAATCCAAGGGAGCAGCTGTGAAATTGGCAGACT
TTGGCTTAGCC
ATAGAAGTTCAAGGGGACCAGCAGGCGTGGTTTGGTTTTGCTGGCACACCTGGATATCTTTCTCCAGAA
GTTTTACGTAA
AGATCCTTATG
>R read, delta6v1,14b
TCAACCCTGCCAAACGCATCACAGCCTCAGAGGCACTGAAGCACCCATGGATCTGTCAACGTTCTACTGT
TGCTTCCATG
ATGCACAGACAGGAGACTGTAGACTGCTTGAAGAAATTTAATGCTAGAAGAAAACTAAAGGGTGCCAT
CTTGACAACTAT
GCTGGCTACAAGGAATTTCTCAGCCAAGAGTTTGTTGAAGAAACCAGATGGAGTAAAGCACGAAAGCA
AGAGATTATCAA
AGTCACTGAAC
>F read, delta6v1,14a
CAGTGAAGCTGATGCCAGTCATTGTATACAGCAGATTCTAGAAAGTGTTAATCATTGTCACCTAAATGGC
ATAGTTCACA
GGGACCTGAAGCCTGAGAATTTGCTTTTAGCTAGCAAATCCAAGGGAGCAGCTGTGAAATTGGCAGACT
TTGGCTTAGCC
ATAGAAGTTCAAGGGGACCAGCAGGCGTGGTTTGGTTTTGCTGGCACACCTGGATATCTTTCTCCAGAA
GTTTTACGTAA
AGATCCTTATG
>R read, delta6v1,14a
ACCCTGCCAAACGCATCACAGCCTCAGAGGCACTGAAGCACCCATGGATCTGTCAACGTTCTACTGTTGC
TTCCATGATG
CACAGACAGGAGACTGTAGACTGCTTGAAGAAATTTAATGCTAGAAGAAAACTAAAGGGTGCCATCTTG
ACAACTATGCT
GGCTACAAGGAATTTCTCAGCAGCCAAGAGTTTGTTGAAGAAACCAGATGGAGTAAAGCACGAAAGCA
AGAGATTATCAA
AGTCACTGAAC
>F read, delta6v1,14b-16-17-18
CAGTGAAGCTGATGCCAGTCATTGTATACAGCAGATTCTAGAAAGTGTTAATCATTGTCACCTAAATGGC
ATAGTTCACA
GGGACCTGAAGCCTGAGAATTTGCTTTTAGCTAGCAAATCCAAGGGAGCAGCTGTGAAATTGGCAGACT
TTGGCTTAGCC
ATAGAAGTTCAAGGGGACCAGCAGGCGTGGTTTGGTTTTGCTGGCACACCTGGATATCTTTCTCCAGAA
GTTTTACGTAA
AGATCCTTATG
>R read, delta6v1,14b-16-17-18
GACAACTATGCTGGCTACAAGGAATTTCTCAGCCAAGAGTTTGTTGAAGAAACCAGATGGAGTAAAGAT
AAACAACAAAG

CCAACGTGGTAACCAGCCCCAAAGAAAATATTCCTACCCCAGCGCTGGAGCCCCAAACTACTGTAATCCA
CAACCCTGAT
GGAAACAAGGAGTCAACTGAGAGTTCAAATACAACAATTGAGGATGAAGATGTGAAAGCACGAAAGCA
AGAGATTATCAA
AGTCACTGAAC
>F read, delta6v1,14a-15-17-18
CAGTGAAGCTGATGCCAGTCATTGTATACAGCAGATTCTAGAAAGTGTTAATCATTGTCACCTAAATGGC
ATAGTTCACA
GGGACCTGAAGCCTGAGAATTTGCTTTTAGCTAGCAAATCCAAGGGAGCAGCTGTGAAATTGGCAGACT
TTGGCTTAGCC
ATAGAAGTTCAAGGGGACCAGCAGGCGTGGTTTGGTTTTGCTGGCACACCTGGATATCTTTCTCCAGAA
GTTTTACGTAA
AGATCCTTATG
>R read, delta6v1,14a-15-17-18
AAGAAAACTAAAGGGTGCCATCTTGACAACTATGCTGGCTACAAGGAATTTCTCAGCAGCCAAGAGTTT
GTTGAAGAAAC
CAGATGGAGTAAAGAAAAGGAAGTCCAGTTCGAGTGTTCAGATGATGGAGCCCCAAACTACTGTAATCC
ACAACCCTGAT
GGAAACAAGGAGTCAACTGAGAGTTCAAATACAACAATTGAGGATGAAGATGTGAAAGCACGAAAGCA
AGAGATTATCAA
AGTCACTGAAC

<u>CaMKII gamma_protein sequences</u>

>gamma14,16a,17,18b,19a
LTTMLVSRNFSAAKSLLNKKSDGGVKPQSNNKNSLVSPAQEPAPLQTAMEPQTTVVHNATDGIKGSTESCN
TTTEDEDLK
AAPLRTGNGSSVPEGRSSRDRTAPSAGMQPQPSLCSSAMRKQEIIKITEQLIEAINNGDFEAYTKICDPGLTSF
EPEALG
NLVE
>gamma14,16a,17,18b
LTTMLVSRNFSAAKSLLNKKSDGGVKPQSNNKNSLVSPAQEPAPLQTAMEPQTTVVHNATDGIKGSTESCN
TTTEDEDLK
VRKQEIIKITEQLIEAINNGDFEAYTKICDPGLTSFEPEALGNLVE
>gamma14,15,17,18b
LTTMLVSRNFSAAKSLLNKKSDGGVKKRKSSSSVHLMEPQTTVVHNATDGIKGSTESCNTTTEDEDLKVRKQ
EIIKITEQ
LIEAINNGDFEAYTKICDPGLTSFEPEALGNLVE
>gamma14,17,18b,19a
LTTMLVSRNFSAAKSLLNKKSDGGVKEPQTTVVHNATDGIKGSTESCNTTTEDEDLKAAPLRTGNGSSVPEG
RSSRDRTA
PSAGMQPQPSLCSSAMRKQEIIKITEQLIEAINNGDFEAYTKICDPGLTSFEPEALGNLVE
>gamma14,15,17,18b,19a
LTTMLVSRNFSAAKSLLNKKSDGGVKKRKSSSSVHLMEPQTTVVHNATDGIKGSTESCNTTTEDEDLKAAPLR
TGNGSSV

PEGRSSRDRTAPSAGMQPQPSLCSSAMRKQEIIKITEQLIEAINNGDFEAYTKICDPGLTSFEPEALGNLVE
>gamma14,17,18b
LTTMLVSRNFSAAKSLLNKKSDGGVKEPQTTVVHNATDGIKGSTESCNTTTEDEDLKVRKQEIIKITEQLIEAIN
NGDFE
AYTKICDPGLTSFEPEALGNLVE
>gamma14,16b,17,18b,19a
LTTMLVSRNFSAAKSLLNKKSDGGVKPQSNNKNSLEPQTTVVHNATDGIKGSTESCNTTTEDEDLKAAPLRT
GNGSSVPE
GRSSRDRTAPSAGMQPQPSLCSSAMRKQEIIKITEQLIEAINNGDFEAYTKICDPGLTSFEPEALGNLVE
>gamma14,16b,17,18b
LTTMLVSRNFSAAKSLLNKKSDGGVKPQSNNKNSLEPQTTVVHNATDGIKGSTESCNTTTEDEDLKVRKQEII
KITEQLI
EAINNGDFEAYTKICDPGLTSFEPEALGNLVE
>gamma14,15,16a,17,18b
LTTMLVSRNFSAAKSLLNKKSDGGVKKRKSSSSVHLMPQSNNKNSLVSPAQEPAPLQTAMEPQTTVVHNAT
DGIKGSTES
CNTTTEDEDLKVRKQEIIKITEQLIEAINNGDFEAYTKICDPGLTSFEPEALGNLVE
>gamma14,15,16a,17,18b,19a
LTTMLVSRNFSAAKSLLNKKSDGGVKKRKSSSSVHLMPQSNNKNSLVSPAQEPAPLQTAMEPQTTVVHNAT
DGIKGSTES
CNTTTEDEDLKAAPLRTGNGSSVPEGRSSRDRTAPSAGMQPQPSLCSSAMRKQEIIKITEQLIEAINNGDFEA
YTKICDP
GLTSFEPEALGNLVE
>gamma14,18b,19a
LTTMLVSRNFSAAKSLLNKKSDGGVKGSTESCNTTTEDEDLKAAPLRTGNGSSVPEGRSSRDRTAPSAGMQP
QPSLCSSA
MRKQEIIKITEQLIEAINNGDFEAYTKICDPGLTSFEPEALGNLVE
>gamma14,15,18b
LTTMLVSRNFSAAKSLLNKKSDGGVKKRKSSSSVHLMGSTESCNTTTEDEDLKVRKQEIIKITEQLIEAINNGDF
EAYTK
ICDPGLTSFEPEALGNLVE
>gamma14,15
LTTMLVSRNFSAAKSLLNKKSDGGVKKRKSSSSVHLMCENRRSLRLQNS*LKPSTMGTLRPTRRFVIQASLPLS
LRPLVT
SWR
>gamma14,15,16b,17,18b
LTTMLVSRNFSAAKSLLNKKSDGGVKKRKSSSSVHLMPQSNNKNSLEPQTTVVHNATDGIKGSTESCNTTTE
DEDLKVRK
QEIIKITEQLIEAINNGDFEAYTKICDPGLTSFEPEALGNLVE
>gamma14,17,18a,19b
LTTMLVSRNFSAAKSLLNKKSDGGVKEPQTTVVHNATDGIKGSTESCNTTTEDEDLKARCLKDGAPGTEQPP
LQACSPSL
LSAPQPCENRRSLRLQNS*LKPSTMGTLRPTRRFVIQASLPLSLRPLVTSWR
>gamma14,18b

LTTMLVSRNFSAAKSLLNKKSDGGVKGSTESCNTTTEDEDLKVRKQEIIKITEQLIEAINNGDFEAYTKICDPGLT
SFEP
EALGNLVE
>gamma14,15,16b,17,18b,19a
LTTMLVSRNFSAAKSLLNKKSDGGVKKRKSSSSVHLMPQSNNKNSLEPQTTVVHNATDGIKGSTESCNTTTE
DEDLKAAP
LRTGNGSSVPEGRSSRDRTAPSAGMQPQPSLCSSAMRKQEIIKITEQLIEAINNGDFEAYTKICDPGLTSFEPE
ALGNLV
E

CaMKII gamma_DNA sequences

>gamma14,16a,17,18b,19a
CCTCACGACCATGCTTGTCTCCAGGAACTTCTCAGCTGCCAAAAGCCTATTGAACAAGAAGTCGGATGGC
GGTGTCAAGC
CACAGAGCAACAACAAAAACAGTCTCGTAAGCCCAGCCCAAGAGCCCGCGCCCTTGCAGACGGCCATG
GAGCCACAAACC
ACTGTGGTACACAACGCTACAGATGGGATCAAGGGCTCCACAGAGAGCTGCAACACCACCACAGAAGA
TGAGGACCTCAA
AGCTGCCCCGCTCCGCACTGGGAATGGCAGCTCGGTGCCTGAAGGACGGAGCTCCCGGGACAGAACAG
CCCCCTCTGCAG
GCATGCAGCCCCAGCCTTCTCTCTGCTCCTCAGCCATGCGAAAACAGGAGATCATTAAGATTACAGAACA
GCTGATTGAA
GCCATCAACAATGGGGACTTTGAGGCCTACACGAAGATTTGTGATCCAGGCCTCACTTCCTTTGAGCCTG
AGGCCCTTGG
TAACCTCGTGGAGGG
>gamma14,16a,17,18b
CCTCACGACCATGCTTGTCTCCAGGAACTTCTCAGCTGCCAAAAGCCTATTGAACAAGAAGTCGGATGGC
GGTGTCAAGC
CACAGAGCAACAACAAAAACAGTCTCGTAAGCCCAGCCCAAGAGCCCGCGCCCTTGCAGACGGCCATG
GAGCCACAAACC
ACTGTGGTACACAACGCTACAGATGGGATCAAGGGCTCCACAGAGAGCTGCAACACCACCACAGAAGA
TGAGGACCTCAA
AGTGCGAAAACAGGAGATCATTAAGATTACAGAACAGCTGATTGAAGCCATCAACAATGGGGACTTTG
AGGCCTACACGA
AGATTTGTGATCCAGGCCTCACTTCCTTTGAGCCTGAGGCCCTTGGTAACCTCGTGGAGGG
>gamma14,15,17,18b
CCTCACGACCATGCTTGTCTCCAGGAACTTCTCAGCTGCCAAAAGCCTATTGAACAAGAAGTCGGATGGC
GGTGTCAAGA
AAAGGAAGTCGAGTTCCAGCGTGCACCTAATGGAGCCACAAACCACTGTGGTACACAACGCTACAGATG
GGATCAAGGGC
TCCACAGAGAGCTGCAACACCACCACAGAAGATGAGGACCTCAAAGTGCGAAAACAGGAGATCATTAA
GATTACAGAACA
GCTGATTGAAGCCATCAACAATGGGGACTTTGAGGCCTACACGAAGATTTGTGATCCAGGCCTCACTTC
CTTTGAGCCTG

AGGCCCTTGGTAACCTCGTGGAGGG
>gamma14,17,18b,19a
CCTCACGACCATGCTTGTCTCCAGGAACTTCTCAGCTGCCAAAAGCCTATTGAACAAGAAGTCGGATGGC
GGTGTCAAGG
AGCCACAAACCACTGTGGTACACAACGCTACAGATGGGATCAAGGGCTCCACAGAGAGCTGCAACACC
ACCACAGAAGAT
GAGGACCTCAAAGCTGCCCCGCTCCGCACTGGGAATGGCAGCTCGGTGCCTGAAGGACGGAGCTCCCG
GGACAGAACAGC
CCCCTCTGCAGGCATGCAGCCCCAGCCTTCTCTCTGCTCCTCAGCCATGCGAAAACAGGAGATCATTAAG
ATTACAGAAC
AGCTGATTGAAGCCATCAACAATGGGGACTTTGAGGCCTACACGAAGATTTGTGATCCAGGCCTCACTT
CCTTTGAGCCT
GAGGCCCTTGGTAACCTCGTGGAGGG
>gamma14,15,17,18b,19a
CCTCACGACCATGCTTGTCTCCAGGAACTTCTCAGCTGCCAAAAGCCTATTGAACAAGAAGTCGGATGGC
GGTGTCAAGA
AAAGGAAGTCGAGTTCCAGCGTGCACCTAATGGAGCCACAAACCACTGTGGTACACAACGCTACAGATG
GGATCAAGGGC
TCCACAGAGAGCTGCAACACCACCACAGAAGATGAGGACCTCAAAGCTGCCCCGCTCCGCACTGGGAAT
GGCAGCTCGGT
GCCTGAAGGACGGAGCTCCCGGGACAGAACAGCCCCCTCTGCAGGCATGCAGCCCCAGCCTTCTCTCTG
CTCCTCAGCCA
TGCGAAAACAGGAGATCATTAAGATTACAGAACAGCTGATTGAAGCCATCAACAATGGGGACTTTGAG
GCCTACACGAAG
ATTTGTGATCCAGGCCTCACTTCCTTTGAGCCTGAGGCCCTTGGTAACCTCGTGGAGGG
>gamma14,17,18b
CCTCACGACCATGCTTGTCTCCAGGAACTTCTCAGCTGCCAAAAGCCTATTGAACAAGAAGTCGGATGGC
GGTGTCAAGG
AGCCACAAACCACTGTGGTACACAACGCTACAGATGGGATCAAGGGCTCCACAGAGAGCTGCAACACC
ACCACAGAAGAT
GAGGACCTCAAAGTGCGAAAACAGGAGATCATTAAGATTACAGAACAGCTGATTGAAGCCATCAACAA
TGGGGACTTTGA
GGCCTACACGAAGATTTGTGATCCAGGCCTCACTTCCTTTGAGCCTGAGGCCCTTGGTAACCTCGTGGAG
GG
>gamma14,16b,17,18b,19a
CCTCACGACCATGCTTGTCTCCAGGAACTTCTCAGCTGCCAAAAGCCTATTGAACAAGAAGTCGGATGGC
GGTGTCAAGC
CACAGAGCAACAACAAAAACAGTCTCGAGCCACAAACCACTGTGGTACACAACGCTACAGATGGGATCA
AGGGCTCCACA
GAGAGCTGCAACACCACCACAGAAGATGAGGACCTCAAAGCTGCCCCGCTCCGCACTGGGAATGGCAG
CTCGGTGCCTGA
AGGACGGAGCTCCCGGGACAGAACAGCCCCCTCTGCAGGCATGCAGCCCCAGCCTTCTCTCTGCTCCTC
AGCCATGCGAA

AACAGGAGATCATTAAGATTACAGAACAGCTGATTGAAGCCATCAACAATGGGGACTTTGAGGCCTACA
CGAAGATTTGT
GATCCAGGCCTCACTTCCTTTGAGCCTGAGGCCCTTGGTAACCTCGTGGAGGG
>gamma14,16b,17,18b
CCTCACGACCATGCTTGTCTCCAGGAACTTCTCAGCTGCCAAAAGCCTATTGAACAAGAAGTCGGATGGC
GGTGTCAAGC
CACAGAGCAACAACAAAAACAGTCTCGAGCCACAAACCACTGTGGTACACAACGCTACAGATGGGATCA
AGGGCTCCACA
GAGAGCTGCAACACCACCACAGAAGATGAGGACCTCAAAGTGCGAAAACAGGAGATCATTAAGATTAC
AGAACAGCTGAT
TGAAGCCATCAACAATGGGGACTTTGAGGCCTACACGAAGATTTGTGATCCAGGCCTCACTTCCTTTGAG
CCTGAGGCCC
TTGGTAACCTCGTGGAGGG
>gamma14,15,16a,17,18b
CCTCACGACCATGCTTGTCTCCAGGAACTTCTCAGCTGCCAAAAGCCTATTGAACAAGAAGTCGGATGGC
GGTGTCAAGA
AAAGGAAGTCGAGTTCCAGCGTGCACCTAATGCCACAGAGCAACAACAAAAACAGTCTCGTAAGCCCA
GCCCAAGAGCCC
GCGCCCTTGCAGACGGCCATGGAGCCACAAACCACTGTGGTACACAACGCTACAGATGGGATCAAGGG
CTCCACAGAGAG
CTGCAACACCACCACAGAAGATGAGGACCTCAAAGTGCGAAAACAGGAGATCATTAAGATTACAGAAC
AGCTGATTGAAG
CCATCAACAATGGGGACTTTGAGGCCTACACGAAGATTTGTGATCCAGGCCTCACTTCCTTTGAGCCTGA
GGCCCTTGGT
AACCTCGTGGAGGG
>gamma14,15,16a,17,18b,19a
CCTCACGACCATGCTTGTCTCCAGGAACTTCTCAGCTGCCAAAAGCCTATTGAACAAGAAGTCGGATGGC
GGTGTCAAGA
AAAGGAAGTCGAGTTCCAGCGTGCACCTAATGCCACAGAGCAACAACAAAAACAGTCTCGTAAGCCCA
GCCCAAGAGCCC
GCGCCCTTGCAGACGGCCATGGAGCCACAAACCACTGTGGTACACAACGCTACAGATGGGATCAAGGG
CTCCACAGAGAG
CTGCAACACCACCACAGAAGATGAGGACCTCAAAGCTGCCCCGCTCCGCACTGGGAATGGCAGCTCGGT
GCCTGAAGGAC
GGAGCTCCCGGGACAGAACAGCCCCCTCTGCAGGCATGCAGCCCCAGCCTTCTCTCTGCTCCTCAGCCAT
GCGAAAACAG
GAGATCATTAAGATTACAGAACAGCTGATTGAAGCCATCAACAATGGGGACTTTGAGGCCTACACGAAG
ATTTGTGATCC
AGGCCTCACTTCCTTTGAGCCTGAGGCCCTTGGTAACCTCGTGGAGGG
>gamma14,18b,19a
CCTCACGACCATGCTTGTCTCCAGGAACTTCTCAGCTGCCAAAAGCCTATTGAACAAGAAGTCGGATGGC
GGTGTCAAGG
GCTCCACAGAGAGCTGCAACACCACCACAGAAGATGAGGACCTCAAAGCTGCCCCGCTCCGCACTGGG
AATGGCAGCTCG

GTGCCTGAAGGACGGAGCTCCCGGGACAGAACAGCCCCCTCTGCAGGCATGCAGCCCCAGCCTTCTCTC
TGCTCCTCAGC
CATGCGAAAACAGGAGATCATTAAGATTACAGAACAGCTGATTGAAGCCATCAACAATGGGGACTTTGA
GGCCTACACGA
AGATTTGTGATCCAGGCCTCACTTCCTTTGAGCCTGAGGCCCTTGGTAACCTCGTGGAGGG
>gamma14,15,18b
CCTCACGACCATGCTTGTCTCCAGGAACTTCTCAGCTGCCAAAAGCCTATTGAACAAGAAGTCGGATGGC
GGTGTCAAGA
AAAGGAAGTCGAGTTCCAGCGTGCACCTAATGGGCTCCACAGAGAGCTGCAACACCACCACAGAAGAT
GAGGACCTCAAA
GTGCGAAAACAGGAGATCATTAAGATTACAGAACAGCTGATTGAAGCCATCAACAATGGGGACTTTGA
GGCCTACACGAA
GATTTGTGATCCAGGCCTCACTTCCTTTGAGCCTGAGGCCCTTGGTAACCTCGTGGAGGG
>gamma14,15
CCTCACGACCATGCTTGTCTCCAGGAACTTCTCAGCTGCCAAAAGCCTATTGAACAAGAAGTCGGATGGC
GGTGTCAAGA
AAAGGAAGTCGAGTTCCAGCGTGCACCTAATGTGCGAAAACAGGAGATCATTAAGATTACAGAACAGC
TGATTGAAGCCA
TCAACAATGGGGACTTTGAGGCCTACACGAAGATTTGTGATCCAGGCCTCACTTCCTTTGAGCCTGAGGC
CCTTGGTAAC
CTCGTGGAGGG
>gamma14,15,16b,17,18b
CCTCACGACCATGCTTGTCTCCAGGAACTTCTCAGCTGCCAAAAGCCTATTGAACAAGAAGTCGGATGGC
GGTGTCAAGA
AAAGGAAGTCGAGTTCCAGCGTGCACCTAATGCCACAGAGCAACAACAAAAACAGTCTCGAGCCACAA
ACCACTGTGGTA
CACAACGCTACAGATGGGATCAAGGGCTCCACAGAGAGCTGCAACACCACCACAGAAGATGAGGACCT
CAAAGTGCGAAA
ACAGGAGATCATTAAGATTACAGAACAGCTGATTGAAGCCATCAACAATGGGGACTTTGAGGCCTACAC
GAAGATTTGTG
ATCCAGGCCTCACTTCCTTTGAGCCTGAGGCCCTTGGTAACCTCGTGGAGGG
>gamma14,17,18a,19b
CCTCACGACCATGCTTGTCTCCAGGAACTTCTCAGCTGCCAAAAGCCTATTGAACAAGAAGTCGGATGGC
GGTGTCAAGG
AGCCACAAACCACTGTGGTACACAACGCTACAGATGGGATCAAGGGCTCCACAGAGAGCTGCAACACC
ACCACAGAAGAT
GAGGACCTCAAAGCTCGGTGCCTGAAGGACGGAGCTCCCGGGACAGAACAGCCCCCTCTGCAGGCATG
CAGCCCCAGCCT
TCTCTCTGCTCCTCAGCCATGCGAAAACAGGAGATCATTAAGATTACAGAACAGCTGATTGAAGCCATCA
ACAATGGGGA
CTTTGAGGCCTACACGAAGATTTGTGATCCAGGCCTCACTTCCTTTGAGCCTGAGGCCCTTGGTAACCTC
GTGGAGGG
>gamma14,18b

CCTCACGACCATGCTTGTCTCCAGGAACTTCTCAGCTGCCAAAAGCCTATTGAACAAGAAGTCGGATGGC
GGTGTCAAGG
GCTCCACAGAGAGCTGCAACACCACCACAGAAGATGAGGACCTCAAAGTGCGAAAACAGGAGATCATT
AAGATTACAGAA
CAGCTGATTGAAGCCATCAACAATGGGGACTTTGAGGCCTACACGAAGATTTGTGATCCAGGCCTCACT
TCCTTTGAGCC
TGAGGCCCTTGGTAACCTCGTGGAGGG
>gamma14,15,16b,17,18b,19a
CCTCACGACCATGCTTGTCTCCAGGAACTTCTCAGCTGCCAAAAGCCTATTGAACAAGAAGTCGGATGGC
GGTGTCAAGA
AAAGGAAGTCGAGTTCCAGCGTGCACCTAATGCCACAGAGCAACAACAAAAACAGTCTCGAGCCACAA
ACCACTGTGGTA
CACAACGCTACAGATGGGATCAAGGGCTCCACAGAGAGCTGCAACACCACCACAGAAGATGAGGACCT
CAAAGCTGCCCC
GCTCCGCACTGGGAATGGCAGCTCGGTGCCTGAAGGACGGAGCTCCCGGGACAGAACAGCCCCCTCTG
CAGGCATGCAGC
CCCAGCCTTCTCTCTGCTCCTCAGCCATGCGAAAACAGGAGATCATTAAGATTACAGAACAGCTGATTGA
AGCCATCAAC
AATGGGGACTTTGAGGCCTACACGAAGATTTGTGATCCAGGCCTCACTTCCTTTGAGCCTGAGGCCCTTG
GTAACCTCGT
GGAGGG

Supplement 3: CaMKII activity measurements with all data points shown.
Individual datasets are color-coded.

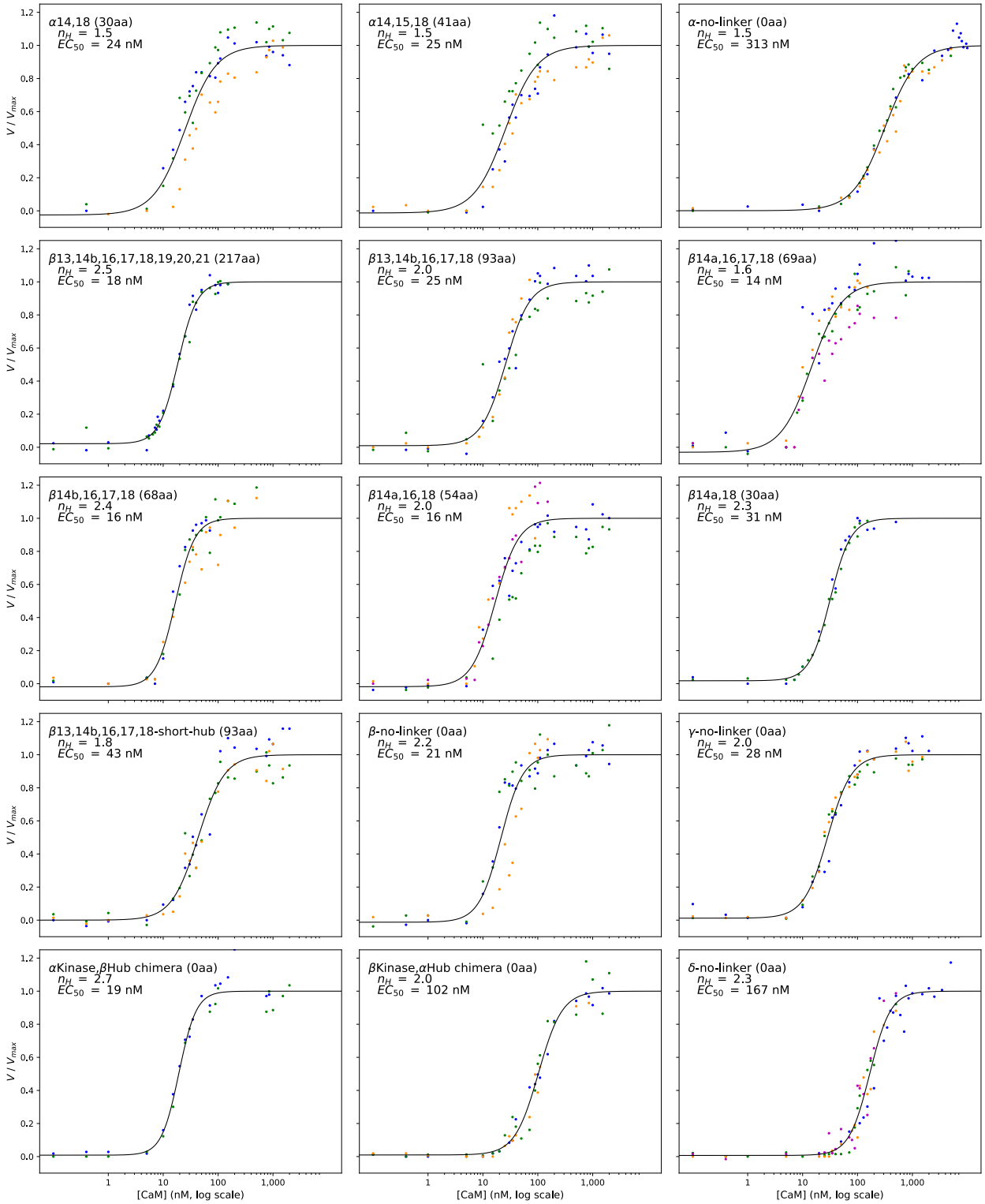
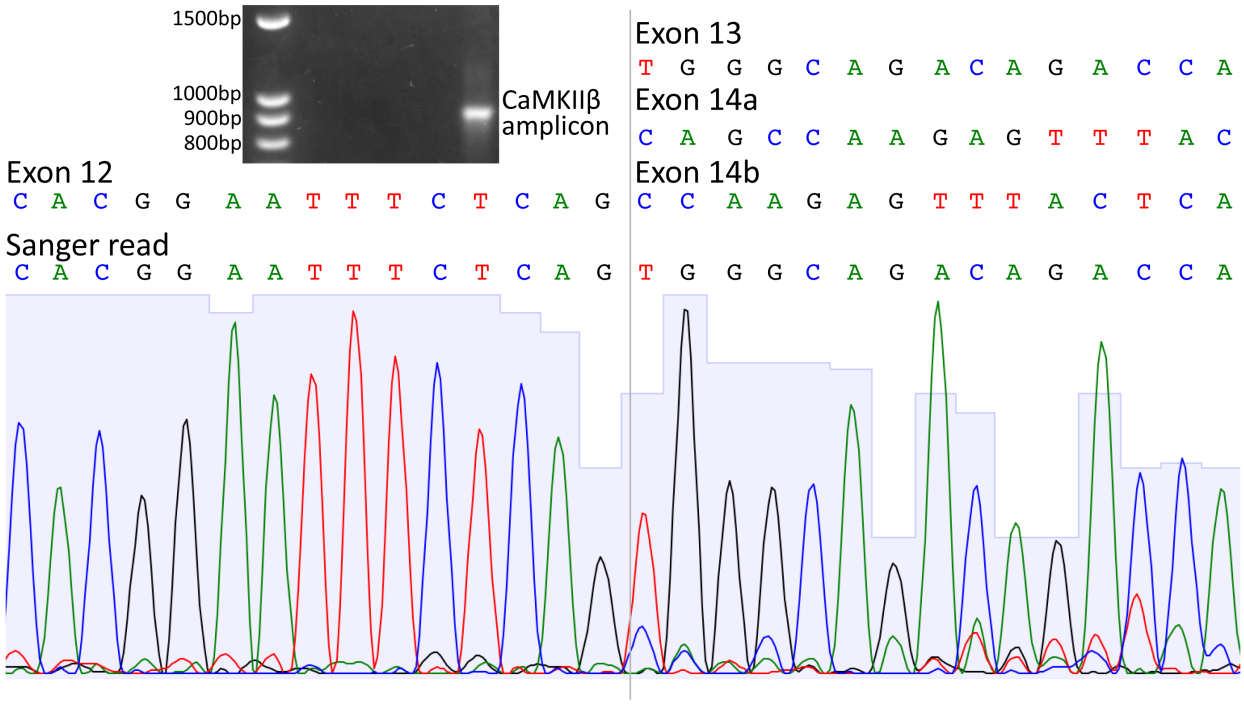
Supplement 4: PCR amplicons from multiple CaMKIIβ variants do not separate on agarose gel. A PCR reaction with CaMKIIβ-specific primers was loaded onto a 2.5% agarose gel and run at 10V for roughly 24hrs (pictured below) for optimal band separation. The single visible band was excised, purified, and Sanger-sequenced. A fragment of the resulting sequencing trace is shown, with height of grey background representing Phred quality scores. The first 15bp of the fragment (left of grey line) map to the last 15bp of CaMKIIβ constitutive exon 12, incorporated into every CaMKIIβ transcript. The last 15bp of the fragment (right of grey line) show a dramatic increase of secondary peak heights, with a corresponding drop-off in Phred scores. The sequence defined by primary peaks (TGGGCAGACAGACCA) maps to CaMKIIβ linker exon 13. Variants β13,14b,16,17,18 (44.8%), β13,14b,16,18 (5.9%), β13,14b,17,18 (4.0%), β13,14b,16,17,18-short-hub (3.7%) accounted for roughly 58.4% of mapped reads from the CaMKIIβ Illumina library. Variants in which exon 14a (CAGCCAAGAGTTTAC) followed exon 12, such as β14a,16,18 (13.8%) and β14a,16,17,18 (9.1%), accounted for roughly 30% of mapped reads. Variants in which exon 14b (CCAAGAGTTTACTCA) followed exon 12, such as β14a, 16,17,18 (7.1%), β14a,16,18 (6.3%), and β14a,17,18 (1.2%) accounted for roughly 14% of mapped reads. Secondary peaks corresponding to exons 14a and 14b are clearly visible in the last 15bp of the Sanger sequencing fragment.